TECHNICAL INFORMATION FOR NSM-PHONOGRAPH

CD FIRE

ES IV-CD TECHNOLOGY

0

NSM
APPARATEBAU
GmbH & Co. KG
Postfach 1564 · 1565 · 6530 Bingen 1 · Germany · Allemagne
Saarlandstraße 240 · Telefon (06721) 407-0 · Telex 042215

PART-Nº
209 862

1 TECHNICAL INSTRUCTIONS
2 OPERATING INSTRUCTIONS
3 STATISTIC and SERVICE PROGRAMS
4 CONTROL UNIT
5 DISPLAY/ KEY BOARD
6 CENTRAL UNIT
7 OUTPUT STAGE
8 CD-CHANGER
9 TITLE DRUM
10 COIN and BILL ACCEPTOR
11 REMOTE CONTROL
12
13 OUTPUT TRANSFORMER
14 TROUBLE SHOOTING
15 ACCESSORIES
16
17
18
19
20

GENERAL

The modern technology of this new NSM phonograph **"CD FIRE"** with CD changer assures the highest functional reliability. A practical diagnostic system is available for maintenance and service.
In order to assure satisfactory operation at all times we recommend reading the technical descriptions carefully so that you are familiar with all service operations.

The following technical documents include:

1 The **"TECHNICAL INSTRUCTIONS"** with important information regarding set-up of the phonograph, technical data, location of the components, the "cabinet" parts list as well as the electrical plan and various wiring diagrams.

2 The **"OPERATING INSTRUCTIONS"** with explanations regarding play and settings as well as short instructions for statistics and service programs.

3 The **"STATISTICS and SERVICE PROGRAMS"** as well as test programs and error displays. The convenient service programs help the user in maintenance and control and permit the transfer of bookkeeping and technical data into the new NSM recording device and the printer "NSM DATA PRINT."

4-13 The **"UNIT DESCRIPTIONS"** for control unit, display/keyboard, central unit, output stage, CD changer, title display, electronic coin mechanism and bill validator, remote control and output transformer with their functions and, where applicable, wiring diagram and parts list.

14 **"TROUBLE-SHOOTING CHART,"** a description of errors, error displays as well as flow chart to determine errors.

15 **"ACCESSORIES,"** information on genuine NMS accessories with instructions for installation and exercising options.

The information and illustrations contained in these technical documents are up to date at the time of publication.

SUBJECT TO TECHNICAL MODIFICATION WITHOUT OBLIGATION TO MODIFY EQUIPMENT ALREADY DELIVERED!

Copyright by
NSM Apparatebau GmbH & Co. KG, D-6530 Bingen/Rhein 1, Germany

No reprint in full or part unless approved.

TECHNICAL INSTRUCTIONS

FOR NSM-PHONOGRAPHS

CD FIRE

ES IV-CD TECHNOLOGY

NSM
APPARATEBAU
GmbH & Co. KG
Postfach 1564 - 1565 6530 Bingen 1 Germany Allemagne
Saarlandstraße 240 Telefon (06721) 407-0 Telex 042216

PART-Nº
209 860

INDEX

1. PLEASE READ INSTRUCTIONS
1.1. Transport damages
1.2. Keys
1.3. Use NSM mounting bracket
1.4. Observe when using an upright stand
1.5. Transport devices
1.6. Power connection
1.7. Title strips and CD's

2. LAYOUT OF UNITS
2.1. Display/Keyboard

3. SPECIFICATIONS
3.1. Electrical data
3.2. Music power
3.3. Fuses
3.4. Lighting
3.5. Credit/Cash input
3.6. Keyboard
3.7. Displays
3.8. CD changer
3.9. Loudspeakers
3.10. Special features
3.11. Dimensions

4. LOUDSPEAKER CONNECTION

1. PLEASE READ INSTRUCTIONS

1.1. Transport Damages

If external damage due to transport is noticed, this should at once be recorded on the delivery slip and endorsed by the person making the delivery.

The manufacturer is not liable for damages caused during transport!

1.2. Keys

One cabinet key is taped to the front glas. The other keys are in the cashbox.
To open the cabinet unlock on the right side and open the door.

1.3. Use NSM Mounting Bracket

Secure mounting of the machine is very important since besides the danger of severely damaging the machine, the operator is responsible for all damages caused by an incorrectly mounted wallbox; when choosing the fastening material, take into account the machine's weight of 83 kg. We recommend dowel pins in sufficient quantities (see illustration). The screws should be at least 6 mm in diameter!

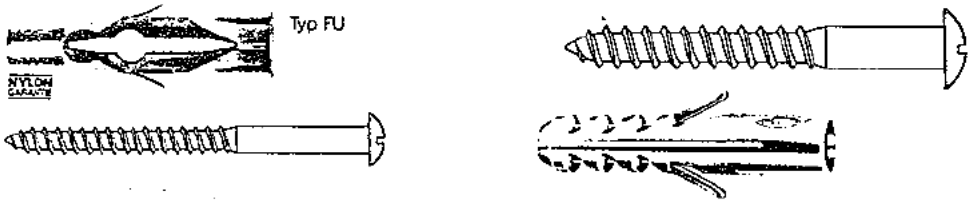

Note: When fixing the machine to the wall, make sure the vent is not hindered in its function. When using the mounting bracket, there is normally enough distance between cabinet and wall for air circulation. Plush wall hangings decrease this distance; in that case the bracket has to be fastened to a flat board. Do not mount machine above heaters!

So that the coin mechanism can function correctly, mount the phonograph horizontally and vertically correct. Therefore, we recommend the practical NSM mounting bracket.
Take care to mount the bracket untwisted since the rear of the cabinet can otherwise be twisted.
To secure the phonograph to the bracket, hexagonal screw M 10 x 12 - from the accessory bag - is to be used.
Plug in connection cable before mounting (see 1.6. "Power Connection").

1.4. Observe When Using an Upright Stand

If the machine is mounted on a stand, it must be made sure that it cannot fall over. Therefore, it is recommended to use sandbags to weigh down the stand. With approx. 15° angle the open machine should not tip over!

1.5. Transport Devices

Defore operating the phonograph all devices for safety and protection during transport have to be removed.
Prior to any further transit the safety and protection devices have to be replaced.

- Take off securing screws (2) and holding bracket (1)
- After loosening the fastening screw (14), remove cardboard strip (13) which prevents accidental opening of the magazine locks.
  If the PCB holding plate (12) is to be flipped down, the fastening screw is to be removed.
- Push the bar locker (15) to the center and swing out left and right magazine (5).
- Take out magazine by moving the respective button (15) to the outside and take out unit.
- Take out red marked security screws (8), (9) so that the changer can swing freely.
- Remove slotted plastic pipe from the lift axle (11), grip the lift close to lift axle (10) and pull up.
- Remove cover from playing mechanism and remove cardboard strip and foam padding (6) - protection of radial motor during transit.

Keep transport devices in a suitable location in cabinet for later transport!

Information for return transport of CD changer:
When exchanging the changer, it may only be transported in the original packaging!

- Remove magazine; push the proper button (15) outwards and remove the unit.
  Inserted CD's can be kept from falling out when the plastic pipe from the lift axle as well as a second one from the enclosed package is put through the opening (4) through all CD's in the magazines.
- Remove design parts: Take out front glass (7), unscrew rear wall (3).
- Put in safety and protection devices in proper sequence.

1.6. Power Connection

The label on the power cord shows the voltage setting by the factory.
For other voltages set voltage required on transformers.
Put in power line into 3-pole socket - on rear of cabinet.
Green-yellow of the three-wire power cord must be connected to the ground according to the international safety code.

Check main voltage before connecting!

After plugging in the phonograph turn on the switch - located under right side of cabinet - fluorescent lights should now light up.

1.7. Title Strips and CD'S

Either by pressing the PUSH TO FLIP key - on the outside of the machine - or TAS 1 on the PCB, to the left of the title display - the flip chart is turned forward.
Clip the marked title strips into the title-strip holders.
After unlocking the locking mechanism by pressing the latch springs, the complete display can be swung open or pulled out on the right-hand side of the title display.
CD Change: Push button (15) to the center, swing out the magazine, pull out tray and load with CD's. Observe the sequence of the magazine and title strip numbers.
Take care to push in the CD trays until they rest in center and do not hinder the lift.

Note: To take out the magazines push the button (15) to the outside; take out magazines one after the other!
The CD's can be protected against falling out, when transporting loaded magazines, by putting the plastic pipes (4) through the magazines and all loaded CD's.

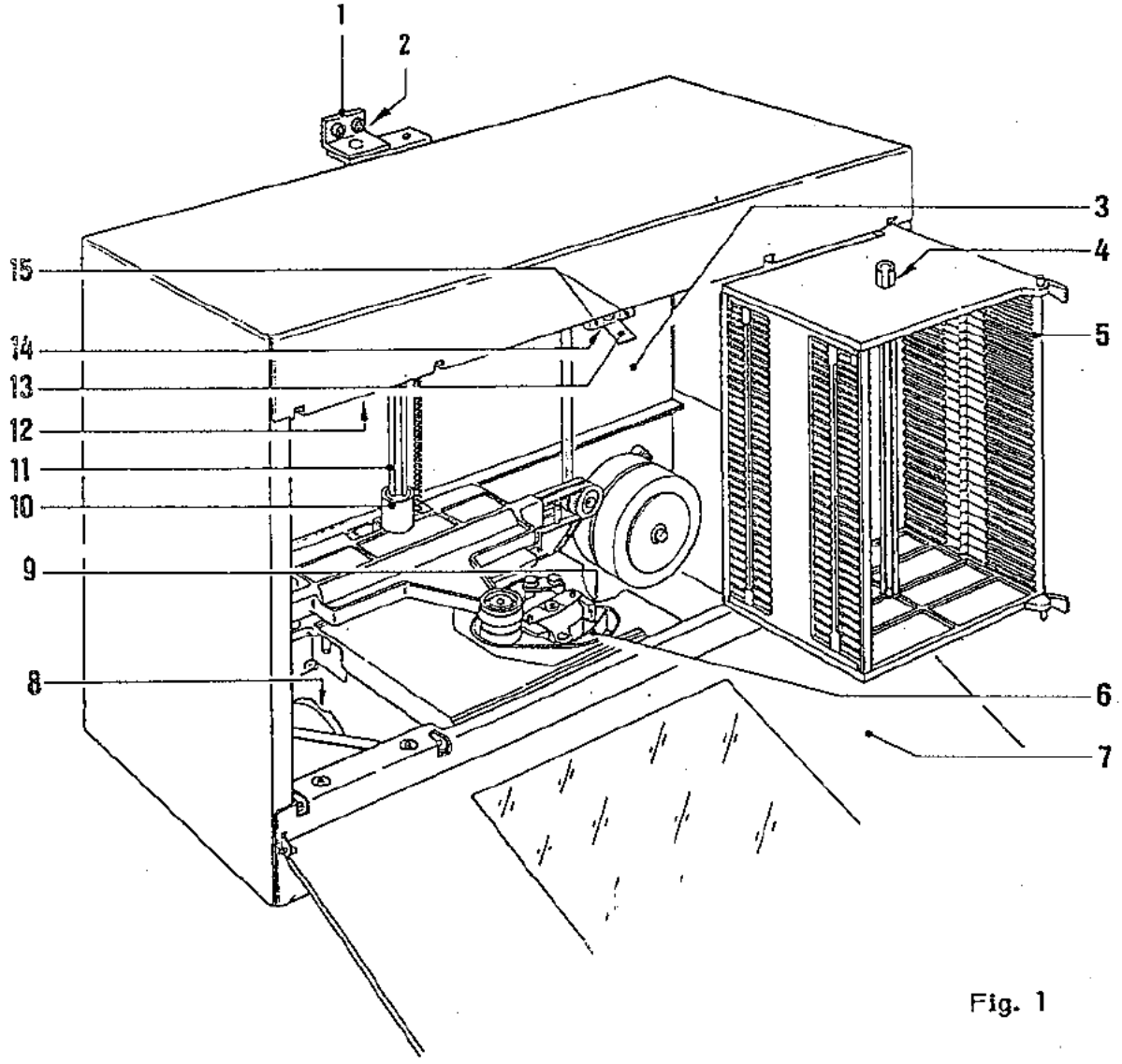

Fig. 1

2. LAYOUT OF UNITS

1 Title Drum
2 Display
3 Keyboard
4 Output Stage
5 Control Unit
6 Coin Mechanim
7 Centrale
8 CD Changer
9 Output Stage
10 Key Switch

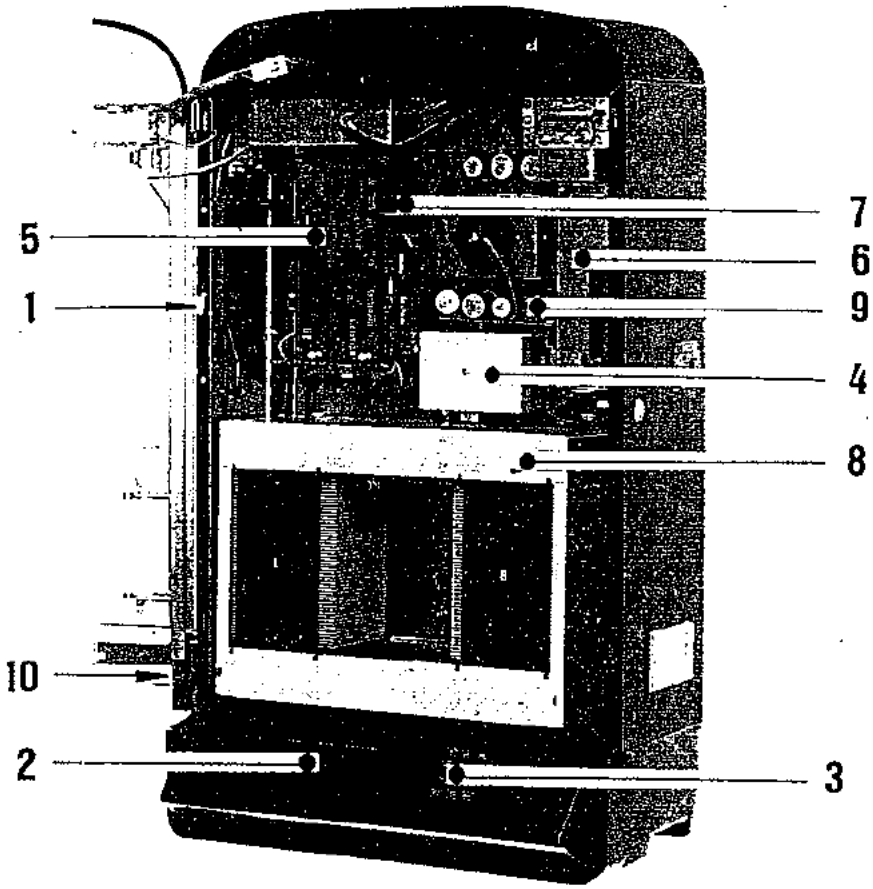

2.1. Display/Keyboard

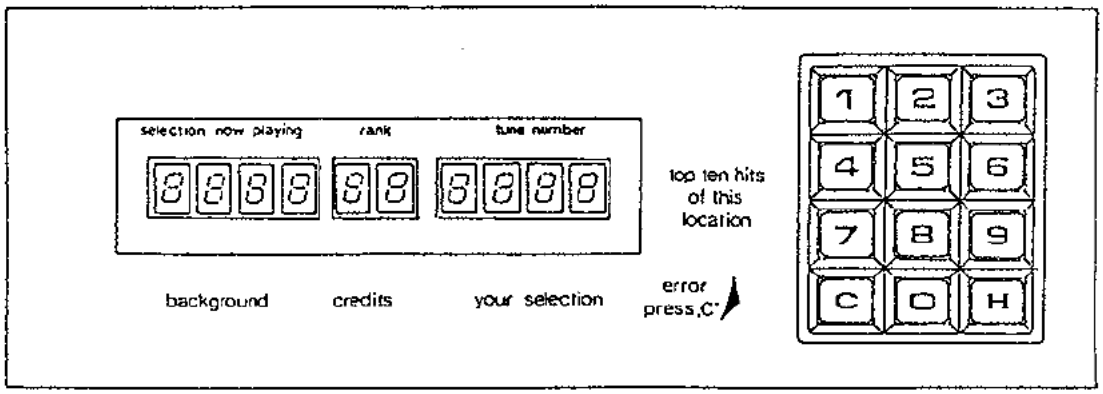

Display panel with displays 1, 2 and 3 as well as 12 button selector

3. SPECIFICATIONS

3.1. Electrical Data

Main voltage: 100-260 V (variable), 50/60 Hz

Power consumption
at standaby 170 watts
at play 450 watts

3.2. Music Power

2 x 200 watts music power at 2 ohms

3.3. Fuses

Replace fuses only with those of same value!

3.4. Lighting

Lamps = 12 V/2 W
1 fluorescent lamp = 15 W
4 fluorescent lamps = 4 W
2 fluorescent lamps = 13 W

3.5. Credit / Cash Input

Maximum credit display is 99.
Price list adjustable individually or as per table.
Free credit adjustment/permanent credit key-operated switch for free credits and background, elect.-mech. cash counter (optional).

3.6. Keyboard

10 number keys 0-9
1 correction key "C"
1 hit-step key "H"

3.7. Displays

Display 1 with 4 seven-segment LED's
Display 2 with 2 seven-segment LED's
Display 3 with 4 seven-segment LED's
1 lamp display "10 top hits"
1 lamp display "background"
1 lamp display "credit"
1 lamp display "your selection"
1 lamp display "error, press key "C"

3.8. CD Changer

NSM CD changer for maximum 100 CD's, 5- or 3 inch disc player: Philips CD-2-system with CDM-3-playing unit, servo panel for control of CDM-3.

3.9. Loudspeakers

1 loudspeaker SP-3R 8 ohms (control loudspeaker)

3.10. Special Features

Integrated microphone preamplifier and connection socket for microphone with paging switch.
Computer-controlled amplifier protection for overload (mismatch).

3.11. Dimensions

Height	39,6	inches
Width	23,8	"
Depth	14,2	"

4. LOUDSPEAKER CONNECTION

The wallbox is equipped with a control loudspeaker. For service or repair it can be connected to the terminals of one of the outputs (left or right channel) of the output stage.
The connection wires of the external loudspeakers are led through an opening in the lower cabinet part (left rear) to the inside, through the bottom in the cabinet corner upwards, and then to the connection terminals of the output stage.
Watch the ▼ = polarity when connecting the loudspeakers!

The ES-IV amplifier serves an output of 2 x 200 watts music power at 2 ohms per channel.
If the loudspeaker impedance is 4 ohms, the loudspeaker will use 2 x 100 watts music power (Fig. 1) from the amplifier.

In that case, the additional loudspeakers connected cannot have an impedance of less than 4 ohms since the amplifier otherwisewould be "mismatched" and the overload protection would operate.
If loudspeakers with a higher impedance are connected (Fig. 2), a number of speakers can be connected parallel. In that case, a loudspeaker with a higher impedance would naturally be lower in volume.

The polarity must be maintained because otherwise bass reproduction would nullify itself!

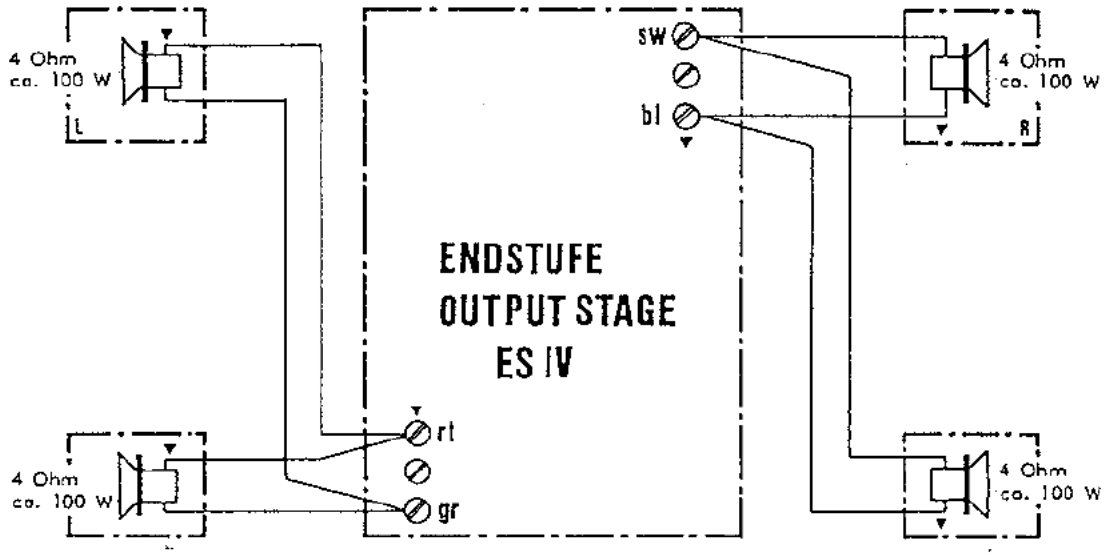

Fig. 1

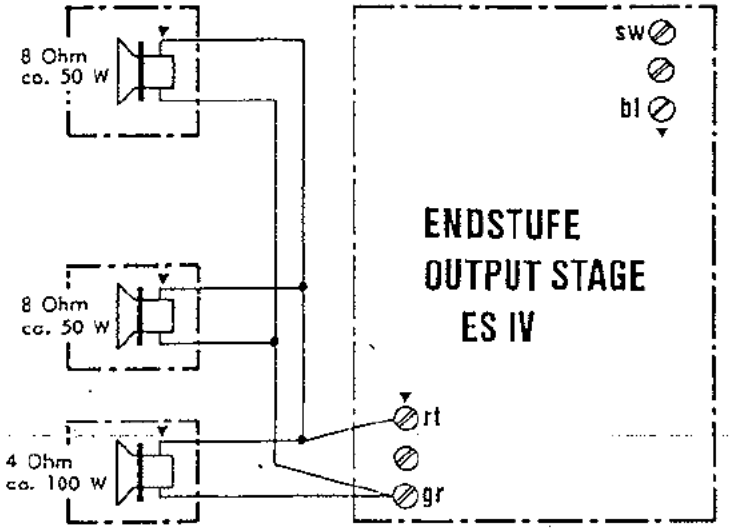

Fig. 2

Mono mode; sound system for separate rooms; see Fig. 3.
If the volume is to be controlled independently from 2 rooms, both cabinet speakers can be connected to one channel. The loudspeaker for the other room can then be connected to the free channel. For that a jumper has to be soldered at DR 202 (see cut-out PCB central unit).

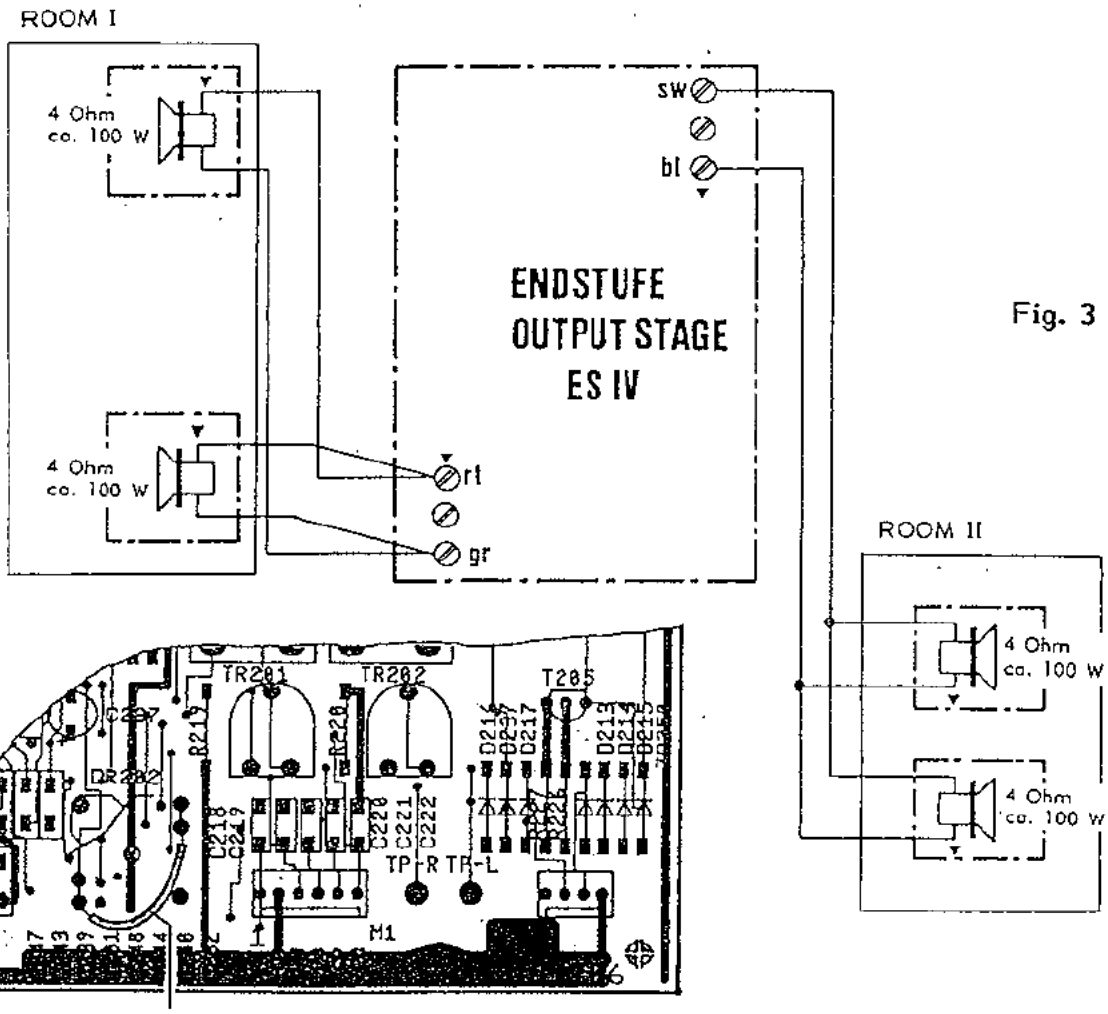

Fig. 3

Bridge

Detail from Circuit Board

Additional Loudspeakers and Separate Control

Speakers I and II in serial connection result in lower volume (Fig. 4)!

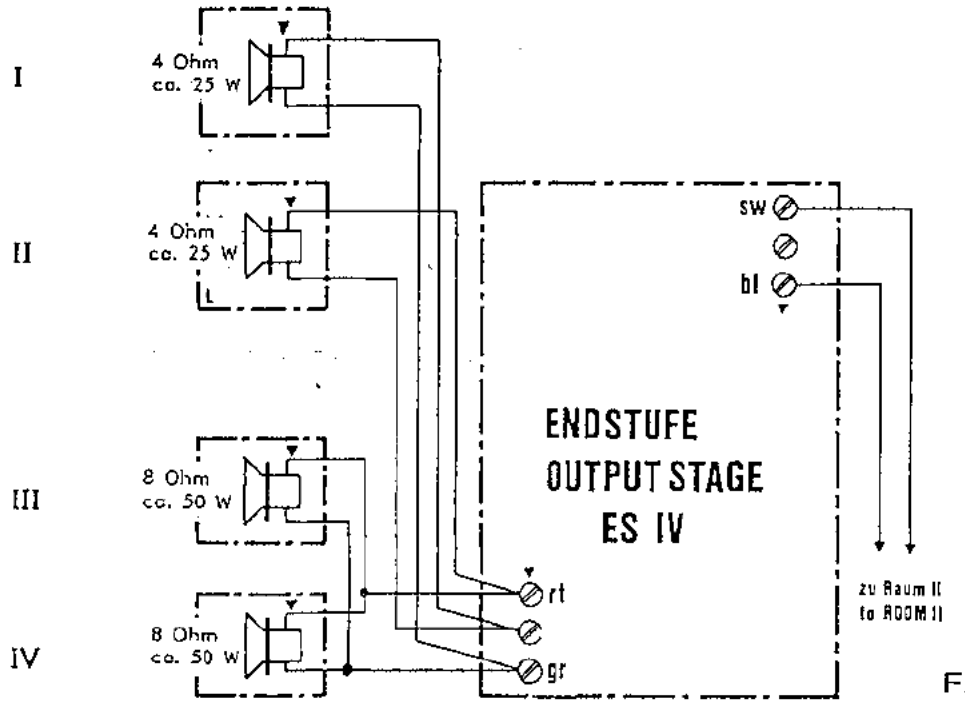

Fig. 4

If even more speakers are to be connected whereby the total impedance drops below 2 ohms, an output transformer has to be used (see schematics "Loudspeaker Connection" and unit description "OUTPUT TRANSFORMER").

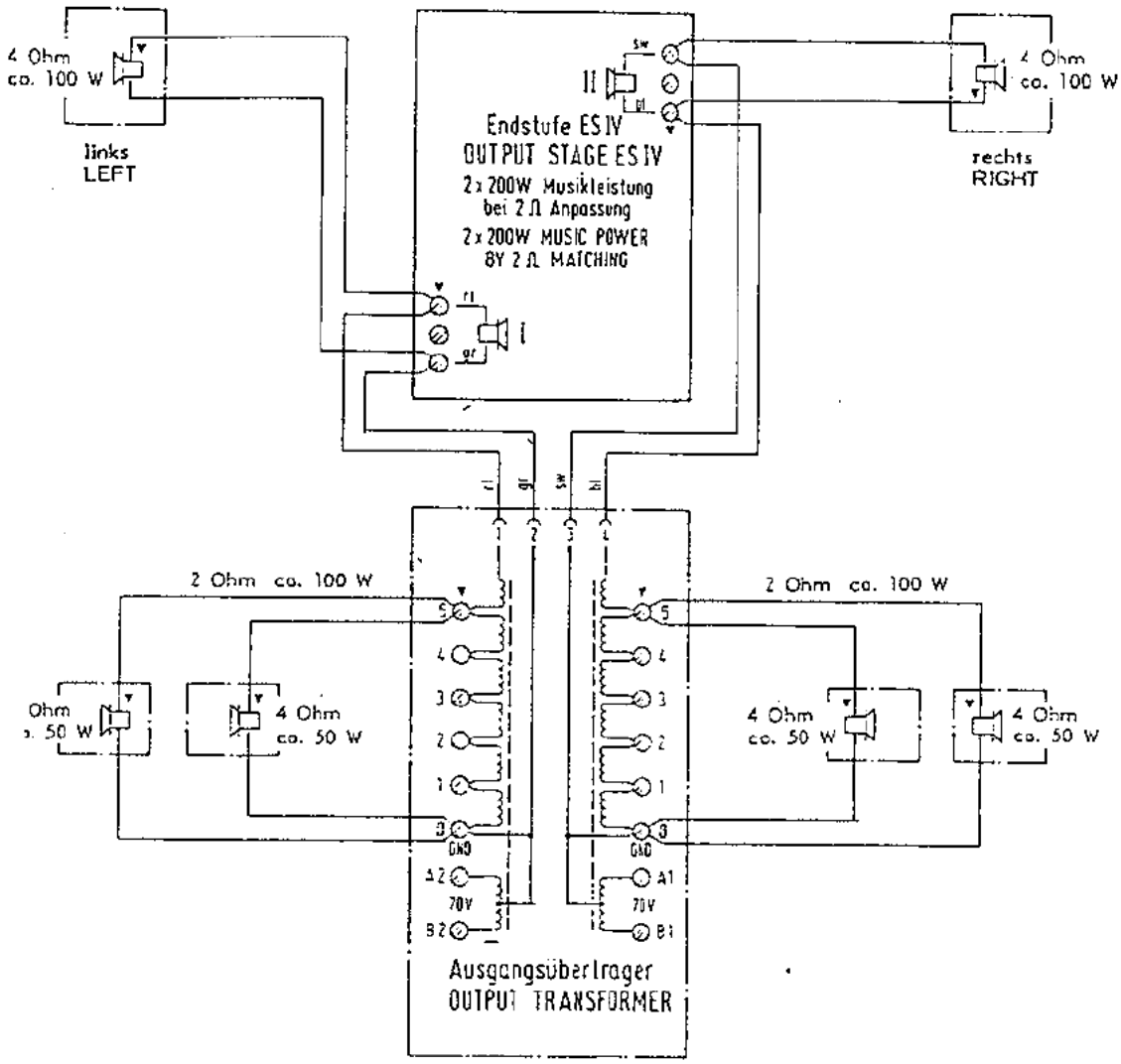

Anschlußschema für Ausgangsübertrager
CONNECTION DIAGRAM FOR OUTPUT TRANSFORMER

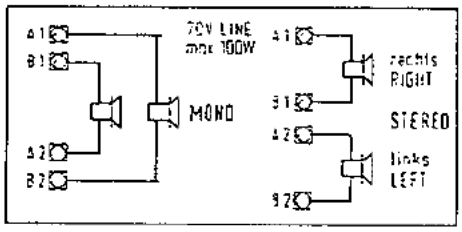

Klemme TERMINAL POSITION	Lautsprecher SPEAKER 2,5 Ω	4 Ω	8 Ω	16 Ω
0 - 5	100 W	70 W	45 W	22 W
0 - 4	48 W	30 W	16 W	8 W
0 - 3	24 W	15 W	8 W	4 W
0 - 2	12 W	7,5 W	4 W	2 W
0 - 1	3 W	1,8 W	1 W	0,5 W

ÄNDERUNGEN IM SINNE DES TECHN. FORTSCHRITTES VORBEHALTEN, JEDOCH KEINE NACHRÜSTPFLICHT!
SUBJECT TO TECHNICAL MODIFICATION WITHOUT OBLIGATION TO MODIFY EQUIPMENT ALREADY DELIVERED!

MUSIKAUTOMATEN
PHONOGRAPHS

ES IV - CD TECHNOLOGY

Lautsprecheranschluß
SPEAKER CONNECTION

Anschluß für max. Ausgangsleistung
CONNECTION FOR MAX. POWER OUTPUT

Datum	Gez.	Geprüft	Freigabe
26 01 89	Braun		

POS.	PART-No	DESCRIPTION	DATA	QTY
		CABLE HARNESS		
	171 782	CENTRALE - CONTROL UNIT	15 PRONGS	1
	171 783	CENTRALE - CONTROL UNIT	12 PRONGS	1
	174 012	DISPLAY		1
	174 000	CENTRALE - OUTPUT STAGE		2
	174 022	CENTRALE - MAINS TRANSFORMER		1
	174 023	TRANSFORMER - CD PLAYER		1
	174 024	KEY- and CABINET SWITCH		1
	174 026	MAINS WIRING	by 220-240 V	
	174 057	MAINS WIRING	by 100-127 V	1
	174 027	CD - AUDIO		1
	174 028	CENTRAL - CB TITLE HOLDER		1
	174 047	DOLLAR BILL - CONTROL UNIT		1
		UNITS		
001	173 663	CIRCUIT BOARD - CONTROL UNIT CD	SEE PAGE 406	
002	173 664	CIRCUIT BOARD - DISPLAY CD	SEE PAGE 504	
003	173 667	CIRCUIT BOARD - CENTRAL UNIT	SEE PAGE 608	
	173 668	CIRCUIT BOARD - CENTRAL UNIT	SEE PAGE 608	
004	171 701	OUTPUT STAGE	SEE PAGE 703	
005	173 470	CD-CHANGER 100 -STANDARD-	SEE PAGE 806	
006	173 416	TITLE DRUM CD	SEE PAGE 904	
	171 808	IR - REMOTE CONTROL	SEE PAGE 1103	
	172 431	OUTPUT TRANSFORMER with CABLE		
	224 223	MICROPHONE		
	171 880	MICROPHONE CABLE	10 METER	
	172 187	MICROPHONE CABLE	25 METER	
	172 025	TAPE-CONNECTING CABLE		
	114 772	RECORDING DEVICE SYSTEM		
	173 348	CASH COUNTER		
	173 985	CONNECTING UNIT for WALLBOX		

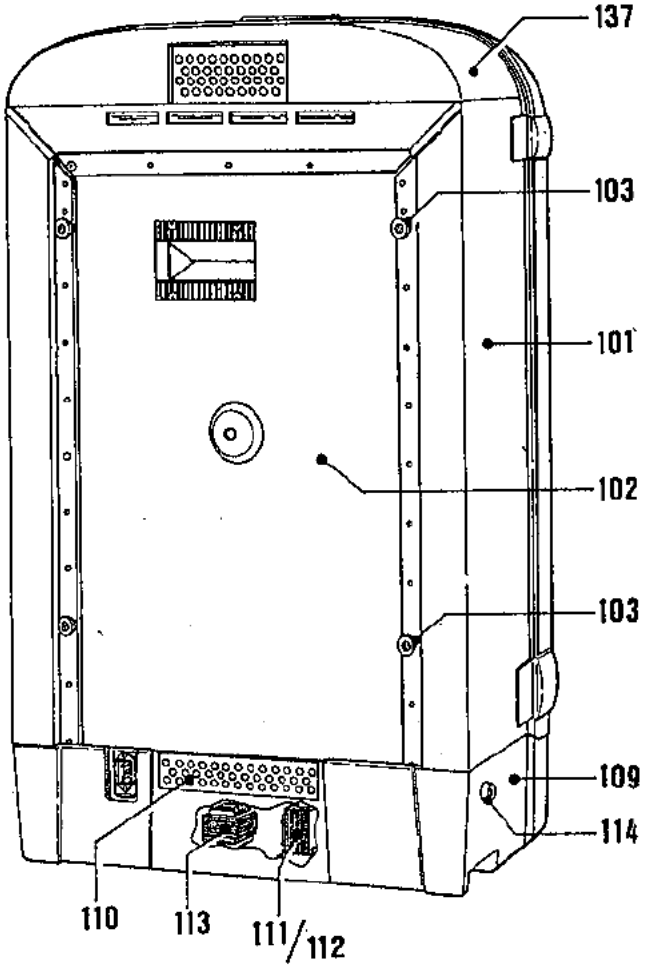
137
103
101
102
103
109
114
110
113
111/112

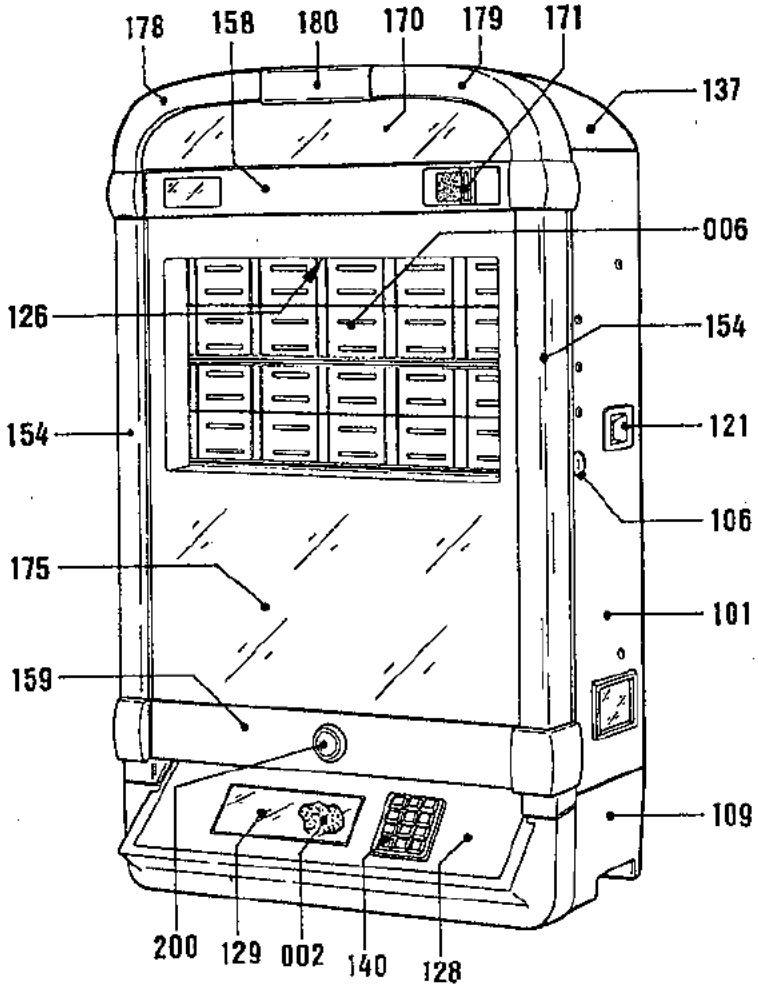
178
158
180
170
179
171
137
006
126
154
154
121
106
175
101
159
109
200
129
002
140
128

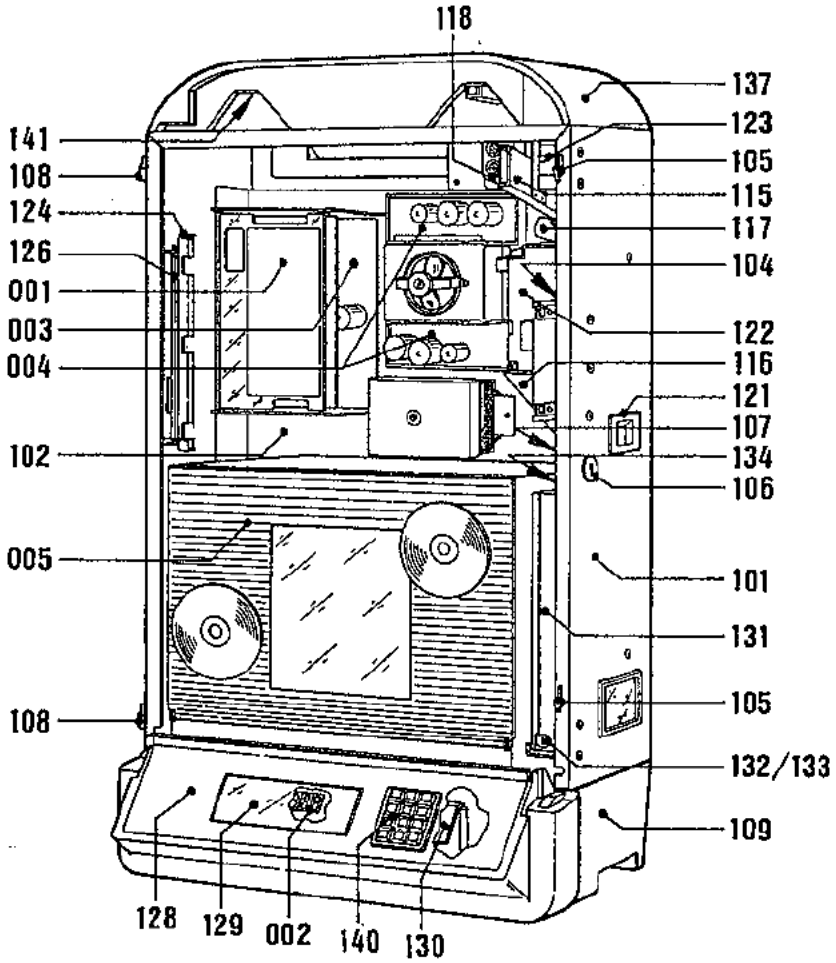
118
137
141
123
108
105
124
115
126
117
001
104
003
122
004
116
121
107
102
134
106
005
101
131
105
108
132/133
109
128
129
002
140
130

POS.	PART-No	DESCRIPTION	DATA	QTY
		PHONOGRAPH > CD FIRE <		
101	173 795	CABINET, PRE-MOUNTED		1
	174 064	CABINET, PRE-MOUNTED	for USA only	
102	173 696	BACK COVER		1
103	112 462	GUIDE PARTS		4
104	1[illegible] 674	CLOSING RAIL		1
105	2[illegible] 474	CLOSING BRACKET		2
106	217 559	CYL.-LOCK		1
107	112 959	CLOSING LEVER		1
	205 722	TENSION SPRING		1
1[illegible]	113 326	HINGE - BOTTOM PART, ASSY		2
109	173 796	BOTTOM PART		1
110	173 692	VENTILATION PLATE		1
111	173 697	TRANSFORMER PLATE		1
112	223 423	MAINS TRANSFORMER		1
113	223 417	MAINS TRANSFORMER CD-PLAYER		1
	225 907	TRANSFO FUSE		1
114	222 505	KEY SWITCH		1
	173 124	HOLDING PLATE		1
NOT FOR USA 115	250 312	COIN CHANNEL	INSERT	1
	173 693	COVER		1
116	173 686	COIN TUBE	CASH BOX	1
117	173 725	COIN REJECT LEVER, STAMPED	COIN ACCEPTOR	1
	173 726	BAFFLE LEVER, STAMPED	COIN ACCEPTOR	1
118	173 655	COIN RETURN PLUNGER		1
	205 265	TENSION SPRING		1
	173 727	HOLDING BRACKET, STAMPED	COIN MECHANISM	1
	173 954	FLAT SPRING		1
121	029 335	COIN RETURN CUP	COIN MECHANISM	1
	102 495	COIN FLAP		1
122	172 139	CIRCUIT PLATE-MARS COIN ACCEP.		1
123	222 483	CABINET SWITCH		1
124	173 654	HOLDING PLATE	TITLE DRUM, LEFT	1
125	173 651	SHAFT		1
126	173 946	TRIMPLATE GUARD	for TITLE DRUM	1
	173 992	TRIMPLATE, UPPER		1
	173 973	TRIMPLATE, LOWER		1
	173 728	HOLDING PLATE, STAMPED (RIGHT)	TITLE DRUM	1
	209 854	LABEL	SIDE PARTS	2
128	173 708	CONSOLE		1
129	173 794	GLASS, PRINTED		1
130	173 670	LAMP MASK		1
	225 587	LAMP SOCKET		1
	226 056	LAMP	12 V 2 W	1

SPARE PARTS LIST

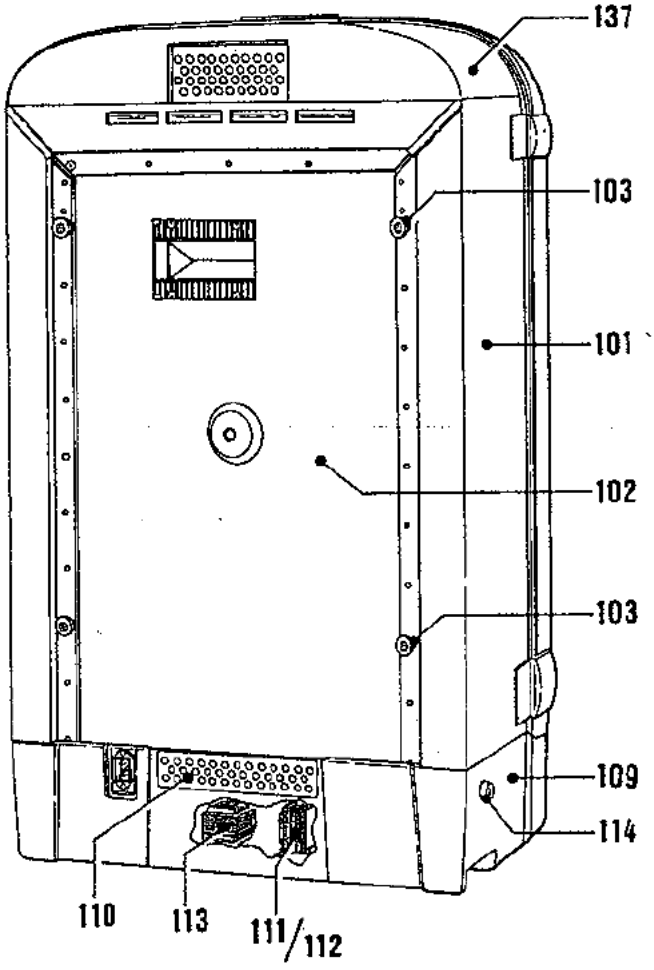

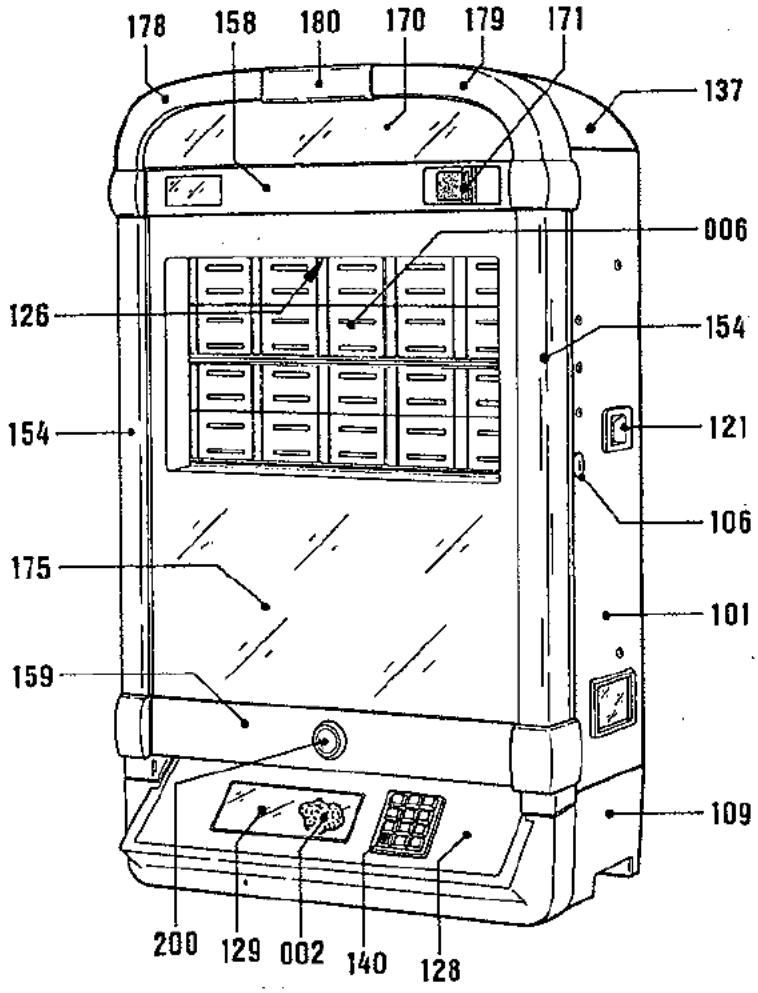

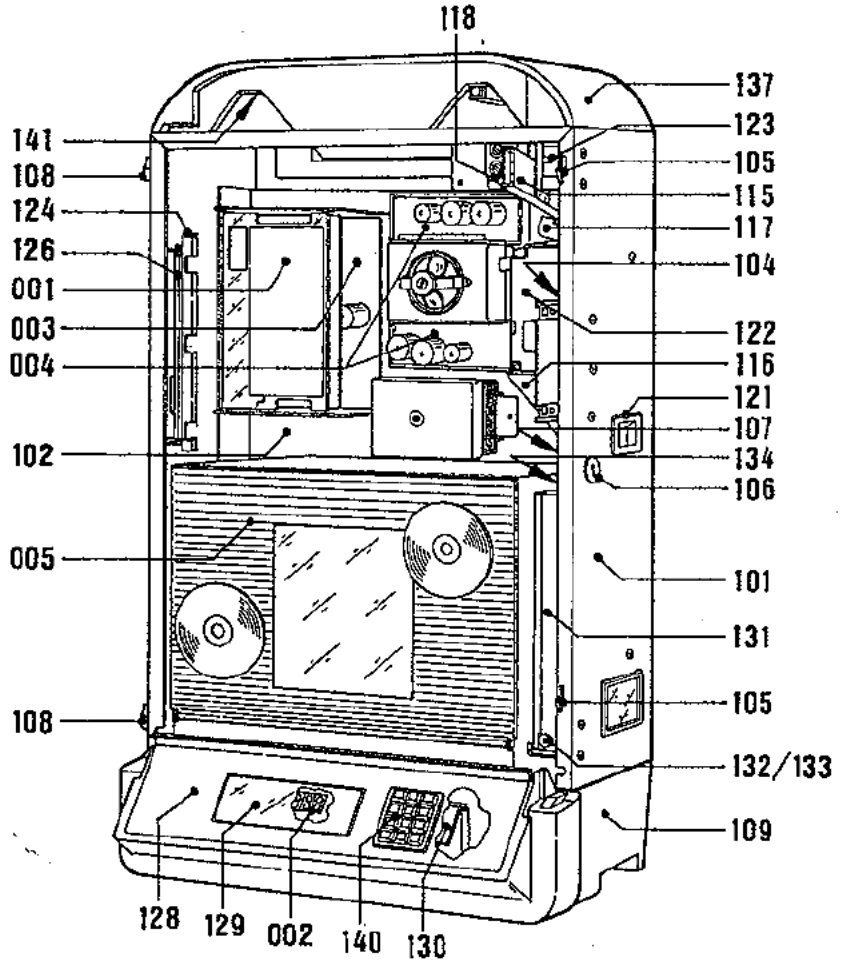

	POS.	PART-№	DESCRIPTION		DATA		QTY
NOT FOR USA	131	174 212	CASH BOX, PRE-MOUNTED				1
	132	206 656	CYL.-LOCK				1
	133	173 908	CLOSING LEVER				1
	134	173 738	COIN TUBE				1
	137	114 654	GUARD				1
		114 728	VENTILATION PLATE				1
		224 215	BALLAST	50 Hz	KX 4/6/8	8 W	2
		224 200	BALLAST	50 Hz	KX 15 NL		1
		224 188	BALLAST	50 Hz	KX 13 D		2
		224 215	BALLAST	60 Hz	KX 4/6/8	8 W	2
		224 191	BALLAST	60 Hz	KX 15/15 W		1
		224 188	BALLAST	60 Hz	KX 13 D		2
	140	173 900	KEY BOARD, ASSY				1
	141		CONTROL LOUDSPEAKER				
		174 005	SPEAKER GRILL				1
		224 149	LOUDSPEAKER		SP-3P	8 OHM	1
		221 316	WIRE WOUND RESISTOR		150 OHM	4 W	1
		107 582	CABLE HARNESS				1

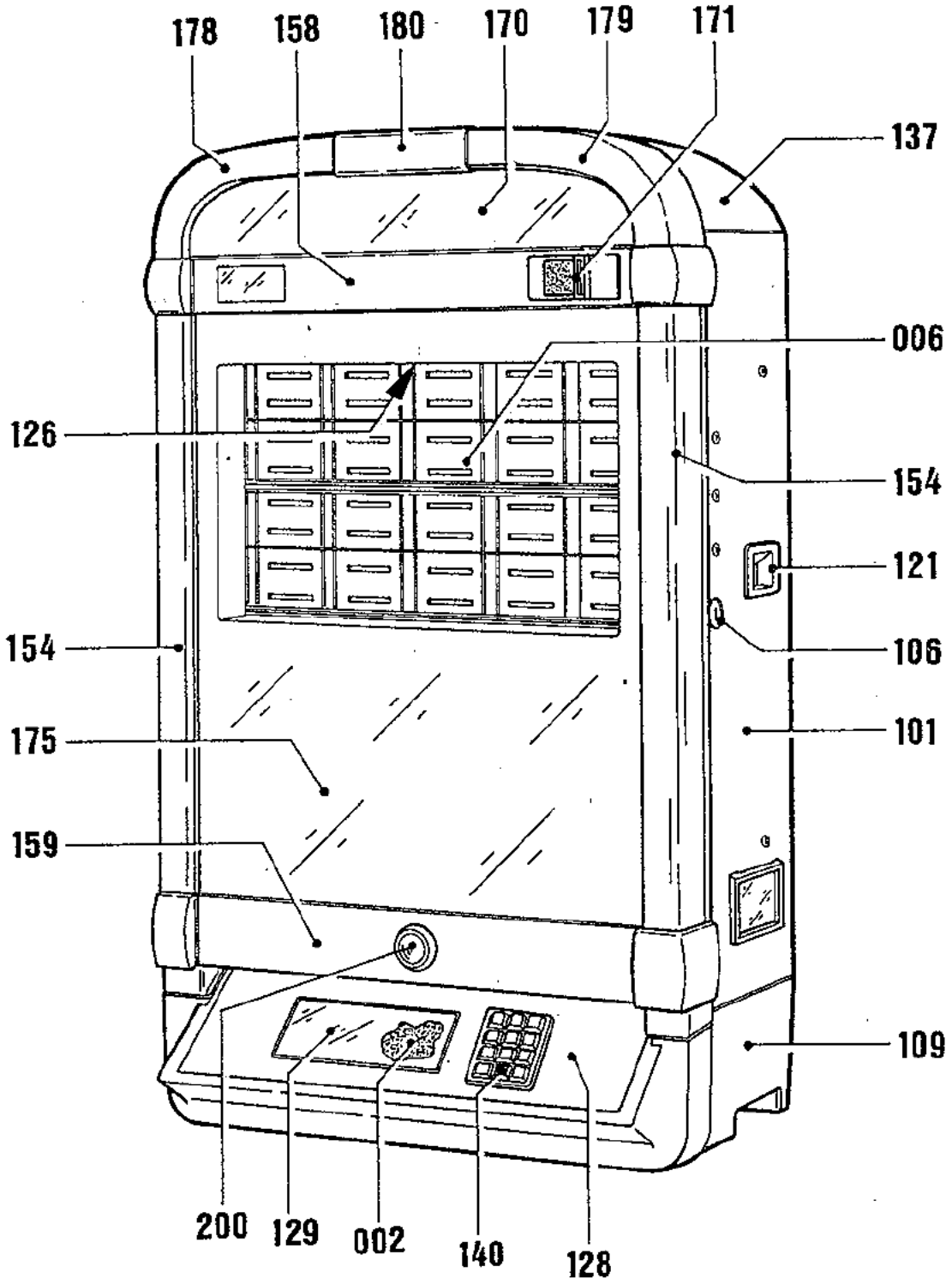
178
158
180
170
179
171
137
006
126
154
121
154
106
175
101
159
109
200
129
002
140
128

POS.	PART-№	DESCRIPTION	DATA	QTY
		FRONT FRAME		
151	250 309	LONGITUDINAL PROFILE, LEFT		1
152	250 273	EDGE CONNECTOR, UPPER LEFT		1
153	250 275	EDGE CONNECTOR, LOWER LEFT		1
154	212 422	LAMP MASK		1
155	250 308	LONGITUDINAL PROFILE, RIGHT		1
156	250 274	EDGE CONNECTOR, UPPER RIGHT		1
157	250 276	EDGE CONNECTOR, LOWER RIGHT		1
154	212 422	LAMP MASK		1
158	173 713	CROSS PROFILE, UPPER ASSY		1
159	173 714	CROSS PROFILE, LOWER ASSY		1
160	115 082	HOLDING BRACKET, RIGHT		1
161	114 679	CLOSING PLATE, UPPER		1
162	114 680	CLOSING PLATE, LOWER		1
163	115 083	HOLDING BRACKET, LEFT		1
164	173 729	CARRIER PLATE, STAMPED		1
165	250 285	PROFIL for LAMP MASK, LEFT		1
166	250 286	PROFIL for LAMP MASK, RIGHT		1
167	114 682	HOLDING BRACKET		2
168	250 287	TERMINAL PROFIL, UPPER		1
169	114 717	LAMP HOLDER II		2
170	115 494	FRONT PLATE		1
	209 852	TRIMPLATE, UPPER		1
171	173 734	COIN INSERT, PRE-MOUNTED		1
	173 718	INSERT		1
USA 171	174 018	CHUTE	DOLLAR BILL	1
	209 857	MASK		1
172	173 905	COVER		1
173	173 746	LAMP HOLDER, RIGHT		1
174	173 747	LAMP HOLDER, LEFT		1
175	204 870	FRONT GLASS		1
	206 519	RUBBER PROFILE		2
	206 520	RUBBER PROFILE		2
176	173 700	GLASS HOLDER, RIGHT		1
177	173 701	GLASS HOLDER, LEFT		1
178	114 800	LAMP MASK, UPPER LEFT		1
179	114 801	LAMP MASK, UPPER RIGHT		1
180	114 698	SOCKET FOR MASK		1
182	173 732	LAMP HOLDER, LEFT PRE-MOUNTED		1
	173 733	LAMP HOLDER, RIGHT PRE-MOUN.		1
184	226 072	FLUORESCENT LAMP	4 W	4
	209 845	FOLIE		2
185	226 085	FLUORESCENT LAMP	15 W	1
	173 999	LAMP HOLDER		2
186	226 075	FLUORESCENT LAMP	13 W	2
	209 844	FOLIE		2

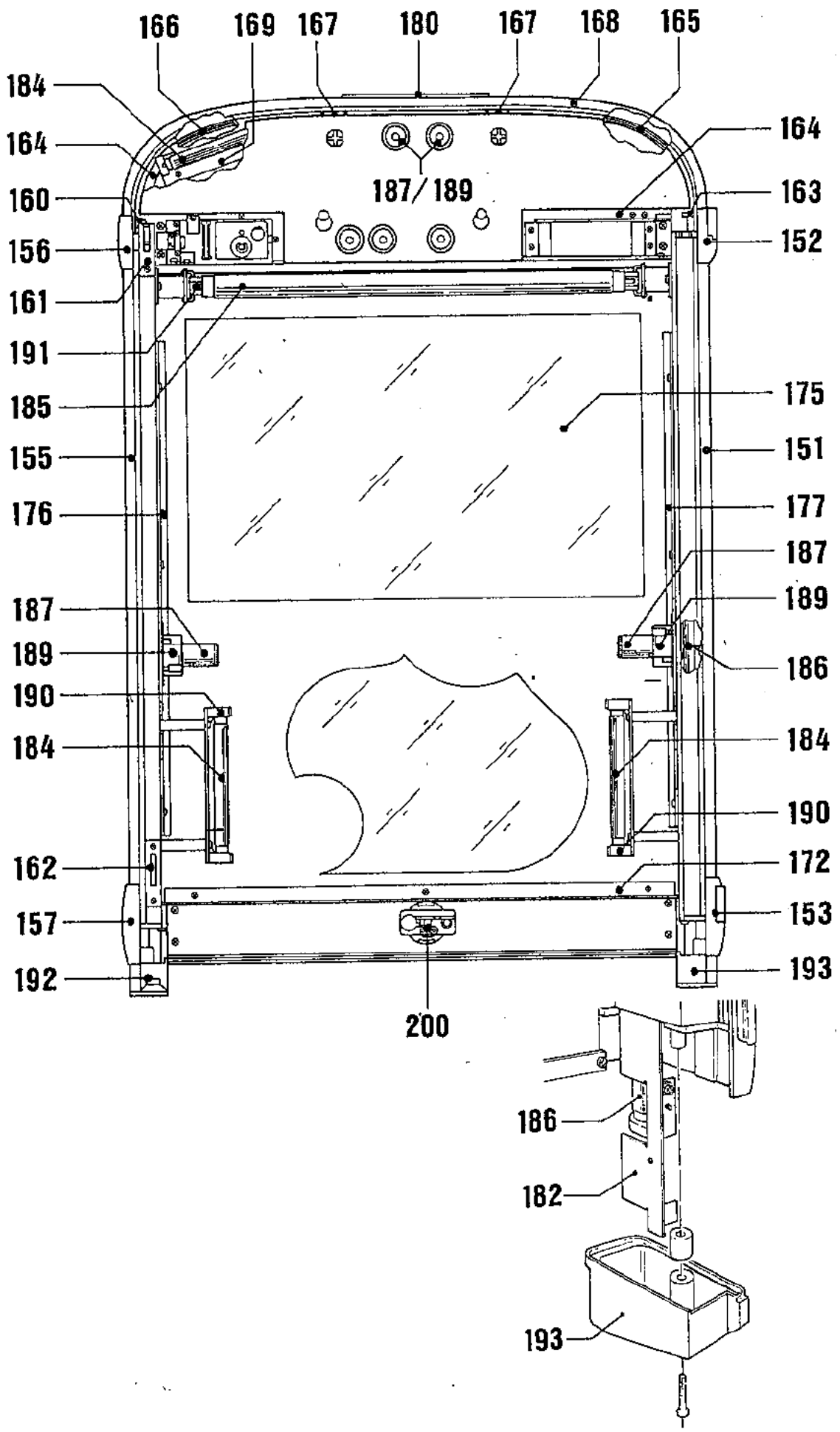
166
169
167
180
167
168
165
184
164
160
156
161
191
185
155
176
187
189
190
184
162
157
192
164
163
152
175
151
177
187
189
186
184
190
172
153
193
187/189
200
186
182
193

POS.	PART-№	DESCRIPTION	DATA	QTY
187	225 343	STARTER	S2	4
188	225 040	STARTER	S10	3
189	225 364	STARTER SOCKET		7
190	225 365	LAMP SOCKET		12
191	225 756	LAMP SOCKET		2
192	173 711	ADAPTER, RIGHT		1
193	173 712	ADAPTER, LEFT		1
200	173 783	BUTTON, ASSY	PUSH TO FLIP	
201	114 637	BUTTON HOUSING, round		1
202	173 909	BUTTON , round		1
203	173 907	INSERTION , printed		1
204	205 770	TENSION SPRING		2
205	114 638	ADAPTER		1
206	222 515	MICRO SWITCH		1
207	225 587	LAMP SOCKET		1
208	226 049	LAMP	12 V 2 W	1
	173 781	CABLE HARNESS		1

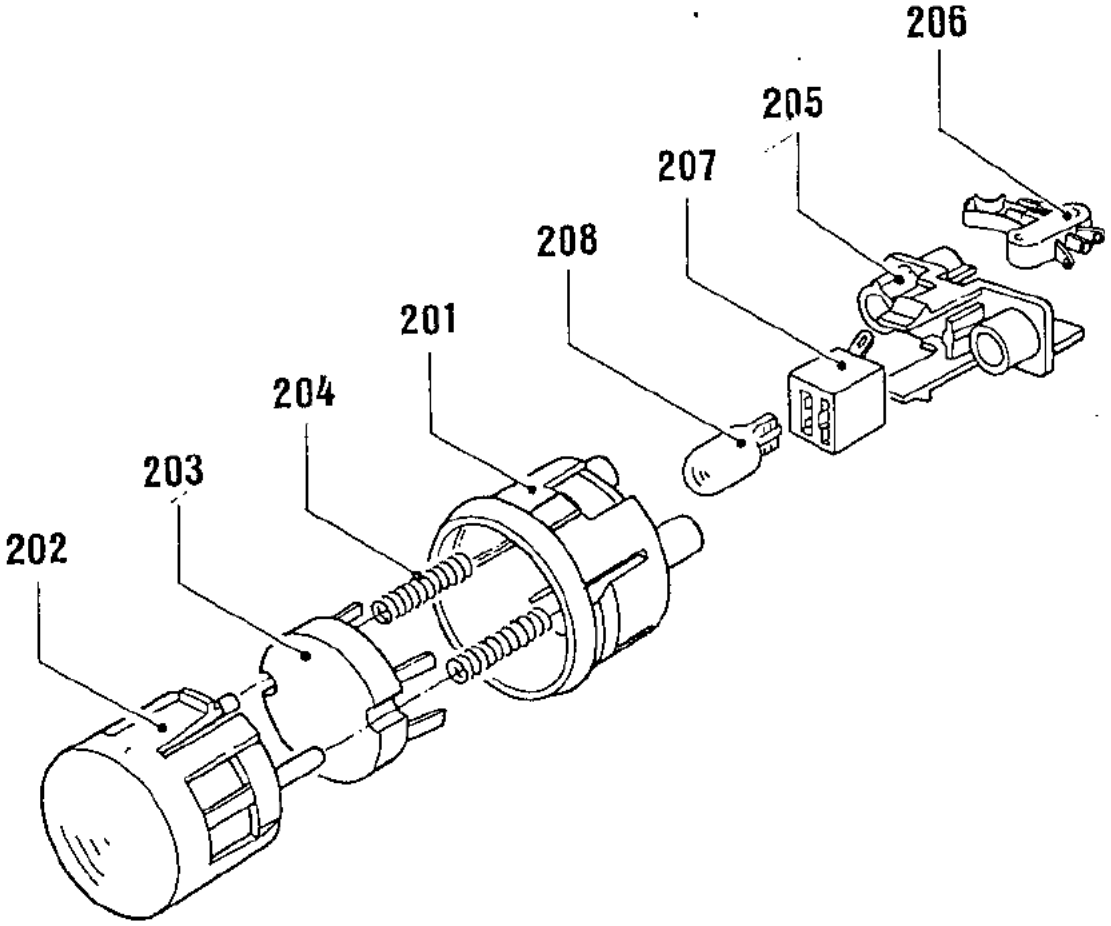

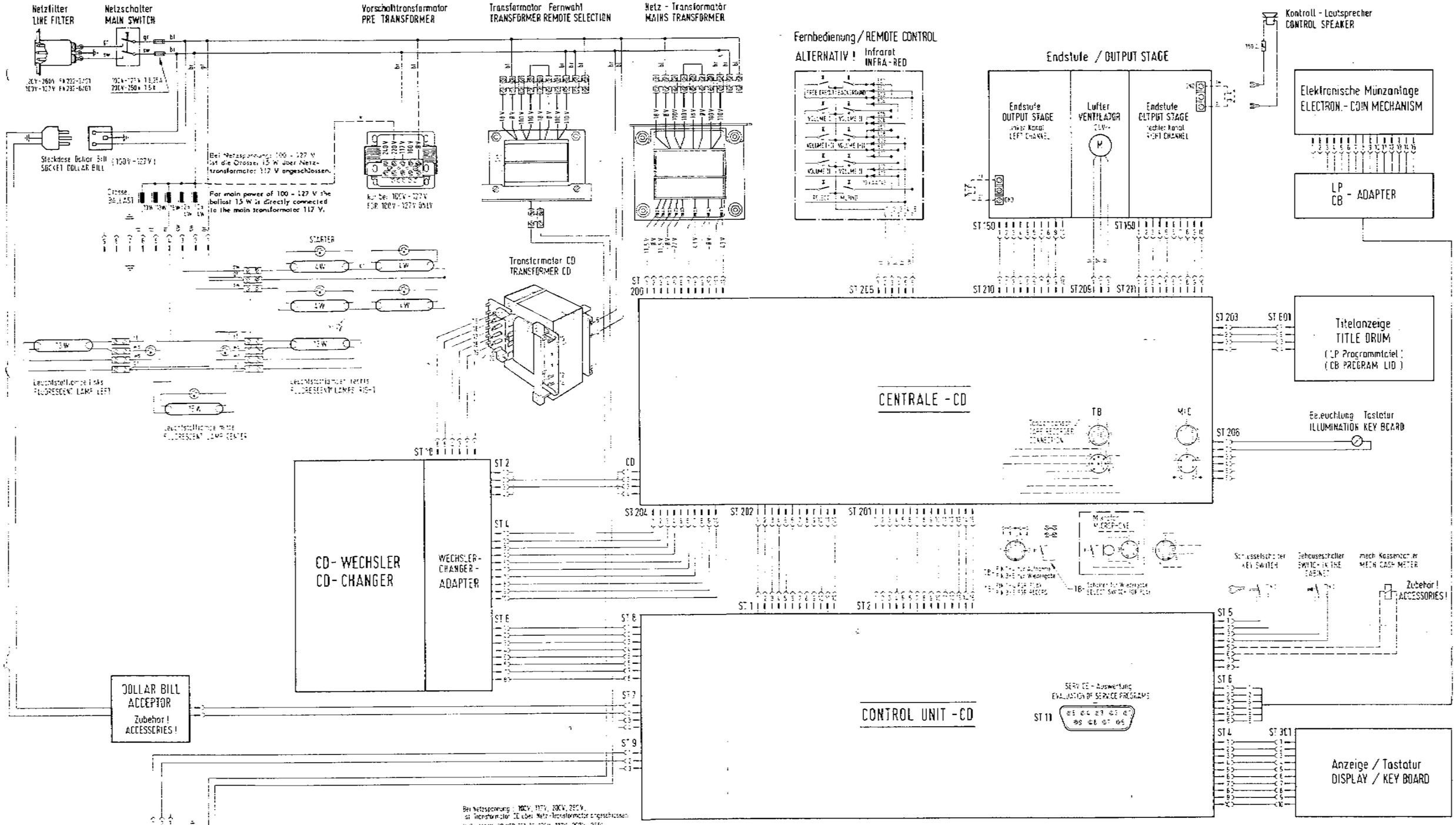
Netzfilter
LINE FILTER
Netzschalter
MAIN SWITCH
Vorschalttransformator
PRE TRANSFORMER
Transformator Fernwahl
TRANSFORMER REMOTE SELECTION
Netz - Transformator
MAINS TRANSFORMER
Fernbedienung / REMOTE CONTROL
ALTERNATIV ! Infrarot
INFRA-RED
Endstufe / OUTPUT STAGE
Endstufe
OUTPUT STAGE
linker Kanal
LEFT CHANNEL
Lüfter
VENTILATOR
Endstufe
OUTPUT STAGE
rechter Kanal
RIGHT CHANNEL
Kontroll - Lautsprecher
CONTROL SPEAKER
Elektronische Münzanlage
ELECTRON.- COIN MECHANISM
LP
CB - ADAPTER
Steckdose Dollar Bill
SOCKET DOLLAR BILL
Drosse
BALLAST
For main power of 100 - 127 V the ballast 15 W is directly connected to the main transformator 117 V.
STARTER
Transformator CD
TRANSFORMER CD
Leuchtstofflampe links
FLUORESCENT LAMP LEFT
Leuchtstofflampe rechts
FLUORESCENT LAMP RIGHT
Leuchtstofflampe mitte
FLUORESCENT LAMP CENTER
Titelanzeige
TITLE DRUM
(LP Programmciel)
(CB PROGRAM LID)
CENTRALE - CD
TB
MIC
Beleuchtung Tastatur
ILLUMINATION KEY BOARD
CD- WECHSLER
CD- CHANGER
WECHSLER-
CHANGER-
ADAPTER
Schlüsselschalter
KEY SWITCH
Gehäuseschalter
SWITCH HOUSE CABINET
mech. Kassenzähler
MECH. CASH METER
Zubehör !
ACCESSORIES !
DOLLAR BILL
ACCEPTOR
Zubehör !
ACCESSORIES !
CONTROL UNIT - CD
SERVICE - Auswertung
EVALUATION OF SERVICE PROGRAMS
Anzeige / Tastatur
DISPLAY / KEY BOARD
Fernwahlanschluß
CONNECTION
REMOTE SELECTION
CD-WALLBOX
WALLBOX ADAPTER
Zubehör !
ACCESSORIES !
Anschlußschema
CONNECTING SCHEME
Transformator CD
TRANSFORMER CD
Netz - Transformator
MAINS TRANSFORMER
Farbspiegel
COLOR CODE
Gezeichneter Anschluß 220V~
ADJUSTED FOR CONNECTION 220V~
Für die anderen Spannungen Netztransformator umstellen
FOR OTHER VOLTAGES RESOLDER POWER TRANSFORMER
Gezeichnete Schalterstellung : Betriebsbereit
CONTACT POSITION : READY FOR SERVICE
Alle Sicherungen flink
ALL FUSES SLO BLO
Sicherungen nur durch gleiche Werte ersetzen
REPLACE FUSES ONLY BY THOSE OF THE SAME VALUE.
Farbangaben ohne Gewähr.
COLOR INDICATION WITHOUT WARRANTY
ÄNDERUNGEN IM SINNE DES TECHN. FORTSCHRITTES VORBEHALTEN, JEDOCH KEINE NACHRÜSTPFLICHT !
SUBJECT TO TECHNICAL MODIFICATION WITHOUT OBLIGATION TO MODIFY EQUIPMENT ALREADY DELIVERED !
MUSIKAUTOMATEN
PHONOGRAPHS
ES IV - CD TECHNOLOGY
ELEKTROPLAN
OPERATING SCHEME
CD-FIRE
209863

OPERATING INSTRUCTIONS

FOR NSM-PHONOGRAPHS

ES IV-CD TECHNOLOGY

2

NSM
APPARATEBAU
GmbH & Co. KG
Postfach 1564 + 1565 · 6530 Bingen 1 · Germany · Allemagne
Saarlandstraße 240 · Telefon (06721) 407-0 · Telex 04 2216

PART-№
209 819 A

INDEX

1. PLAYING SEQUENCE
1.1. Operation after switching on
1.2. Standby
1.3. Credits
1.4. Selection
1.5. Play mode

2. ADJUSTMENTS WITH REMOTE CONTROL
2.1. Volume controls
2.2. Muting
2.3. Free credits
2.4. Background music
2.5. Key switch

3. SERVICE OPERATION - short program for price settings

4. CD change / cash collection

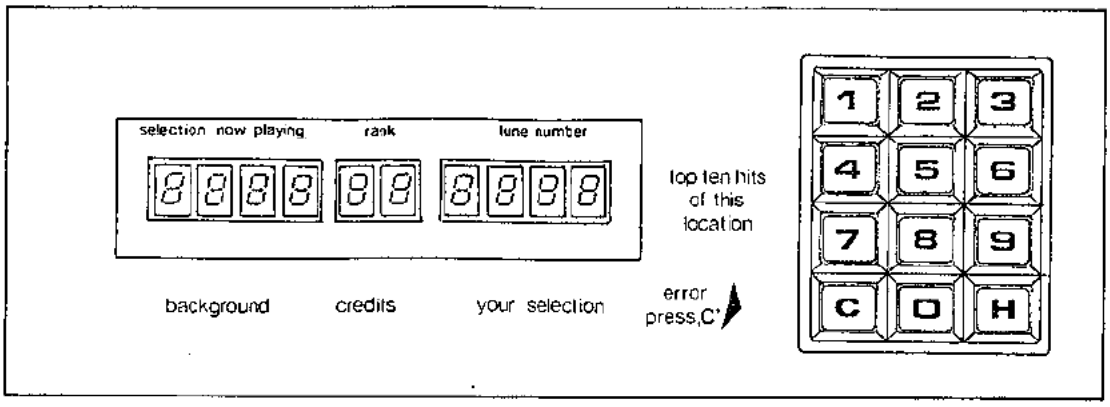

Display panel with displays 1, 2 and 3 as well as 12 button selector

1. PLAYING SEQUENCE

The functional sequence, starting with "power on," standby credit, selection and playing of selected title to the rest position is described below.
The technical assembly and the working together of the components can be seen in the "electronic schematics." Compare the descriptions with the illustration of the display/keyboard above.

1.1. Operation after Switching on

Immediately after switch-on the memory components - on the CONTROL UNIT - and all preprogrammed values are checked.
Display 1 shows then for 2 sec. the program index.
If an error is found during checking, error display Er xx is then shown for 2 sec.
With Er 31 (unverified memory contents) and Er 40 (price settings incorrect) Display 1 with Pxx shows the correct program step which needs to be reprogrammed. See description of service programs.
With other Er-displays, even during operation, proceed according to the instructions in "Trouble Shooting."

1.2. Standby

Hit display:
The microprocessor of the CONTROL UNIT figures out of the 30 titles just played before the ones played most.
On Display 3 the title numbers of the 10 most popular titles, whose rankings (1-10) are shown on Display 2, are changed in intervals of 2 sec. Also "10 top hits" lights up.
When pushing "H," the hit display can be stopped for 16 sec.; every press of the key causes an advance to the next hit.
Note: When the popularity counters are erased (program step P 10), the hit parade is erased, too. In that case "0" appears for ranking until records are played again.

Random Play:
In program step P24 a time interval can be set for random tune playing.
After expiration of set time the flip chart is advanced by 9 pages; then a random title is played.

Conditions for a random title to be played:
- Phonograph in standby mode
- No credit available
- Microphone switch not being used
- No muting
- Set time is expired

1.3. Credits

See unit description "Coin and Bill Validation."

After insertion of a coin the "hit display" is interrupted, lamp "10 top hits" goes off and "credit" and "your selection" light up. Display 2 shows the number of credits.
For every selection credit is deducted.
If not enough credits are available for the selection, "credit" lamp flashes.
If no more coins are inserted within 16 sec. or no selector key is pressed, the mode changes to "hit display."
Free-credit switch (add. key), below the mechanical coin acceptor or on the adapter PCB with electronic coin validators, is only possible when the cabinet lid is open and the cabinet interlock switch is in service position (press add. button once = 1 credit). These credits are not registered statistically.
Attention! The machine is furnished with an interlock switch which must be manually set in service position (pull out). The switch resets automatically when closing the lid.
Note: Credits remain stored during "power off/on."
If the computer detects no activity on the phonograph within 1 hour, the stored credit is cancelled.

1.4. Selection

Title Selection: The four-digit number of the desired title has to be entered (2 digits each for disc and track). "Credit" and "your selection" light up. The selection can be corrected by pressing "C" up to 2 sec. after pressing the 4th digit.

Album Selection: When entering Track 00, all titles of a CD are automatically played (i.e. 0100 = all titles of Disc 01).
The number of credits which are deducted when selecting an album can be programmed in step P46.
When programming "0," album selection is blocked.

With open cabinet switch (interlock lever pulled out) no credit is deducted when selecting.

If the entry is incorrect, e.g. higher than the programmed number of CD tracks which can be selected or an unallowed selection of albums, "error" flashes. In that case, press "C" and repeat the selection.
One credit is deducted for each selection of a title. With album selections credits are deducted as per the programming in program step P46. If there is not enough credit available, "credit" lamp flashes.
16 sec. after selection "hit display" is switched on automatically again.
Information: If during selection a background or random disc was being played, the mode will be interrupted and the selected title is immediately played.
If a higher title number is selected than is available on the CD, then the first title on the CD is automatically played.

1.5. Play Mode

After selection the microprocessor of the CONTROL UNIT moves the pickup of the CD changer to the selected CD and pulls it with its holder out of the magazine into the pickup. The pickup brings the CD to the disc player where it is then played.
Just before play the number of the title is shown on Display 1 ("selection now playing"). After the disc is played, the display is erased and the CD is transported back to its magazine space.
Note: If an error occurs with the CD changer or the player, "Er 7x" or "Er 6x" appears for 2 sec. In that case proceed according to the description in "Trouble Shooting."

Attention!
When playing a test compact disc, the description that comes with the test disc is to be exactly adhered to. By any means, it is to be avoided to give sine signals with peak signal "0dB" at full volume level to the loudspeakers for more than 1 sec.
But also other unfiltered noises and high-frequency signals (which are only used for measuring purposes) can damage the amplifier and loudspeakers at full volume.
When checking channel separation, this test can only be done with a frequency of 1 KHz.

2. ADJUSTMENTS WITH REMOTE CONTROL

The phonograph can optionally be equipped with cable-type remote control or infra-red remote control. All functions and the operation of both models are identical. Therefore, this description is valid for both of them.

The button-control box attached to the rear of the cabinet allows common control of both channels "+" or "-" and "REJECT." Information about the functions of different controls is presented in the unit description "Remote Control."
Note: The button volume control is not present with wallboxes such as the "CD FIRE" or the "CD HIDE-AWAY."

2.1. Volume Controls

We differentiate between two volumes:
1.) The normal volume of selected titles and random play titles
2.) The background volume of background titles

In each case the maximum volume for both channels can be permanently programmed in Steps "1" to "31" in program step P28 for normal and background operation. The corresponding volume is adjustable only when playing a disc or in microphone or tape mode; background music volume only during background play:
Key "I" for left channel; key "II" for right channel; "+" = louder, "-" = softer. When pressing the center key (I + II), the volume for both channels is increased or decreased simultaneously. If the channels were set differently, they are first "equalized" and then matched.
If no selection is made, the volumes for the left and right channels are shown on Display 3.
During "muting" "OFF" appears on Display 1; no further record is played until MUTING is cancelled.
If one of the control buttons is actuated when a record is not playing, with the exception of selection, the momentarily set values are indicated on Display 3.
The last volume set is stored during "power off."

Note: To protect the amplifiers a check is made whether an overload occurs due to mismatching in 250 ms cycles.
Upon recognition of an error the volume of the corresponding channel is reduced step by step automatically by the computer until a non-critical point is reached.

2.2. Muting

The volume of both channels can be set ot "0" by pressing the MUTING key; "OFF" appears on Display 1. Re-pressing of the MUTING key or a VOLUME "+" key causes the system to switch back to the previously set volume for both channels.

Note: With display "OFF" no more records are played until MUTING is switched off.

2.3. Free Credits

With an "open" key switch free credits programmed in program step P23 can be called up. The following free credits are possible depending upon the settings in step P23:
1.) Number of set free credits can be called up individually step by step.
2.) Unlimited free credits can be called up individually step by step.
3.) Permanent credit when pressing key "FREE CREDIT" for the first time (credit display "99"). When key "FREE CREDIT" is pressed again, permanent credit is blocked.

2.4. Background Music

With an "open" key switch the background mode can be switched on with the BACKGROUND key. "Background playing" lights up.
When pressing this key again, the background mode is switched off. In the background mode "random" records are played from the upper area of the magazine. The area can be set in program step P25.
The records are played at a "specific" background volume which can be changed as desired during playing cycle from "0" up to maximum volume set in program step P28.
A "normal record," selected while background music is playing, interrupts the background disc and the selected tune is played at "normal volume."

2.5. Key Switch

A key switch at the side wall serves as protection against unauthorized calling up of free credits and switching on the background mode. When the key switch is "locked," settings from the remote control are disregarded. Key switch "open" permits programmed free credits to be called up and the background mode to be switched on.

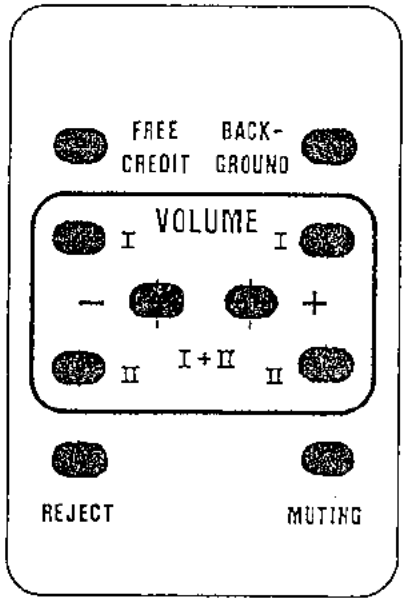

REMOTE CONTROL

3. Service Operation -Short Program for Price Settings-

This description is a summary of a section of the service program.
A detailed description and the corresponding tables are contained in chapter 1.3. "Price Settings" and 1.4. "Monetary Value Settings".

Practical example for setting the "plays per monetary unit" and the "monetary unit settings": 1 play = 30 p
2 plays = 50 p
5 plays = 1 £

Setting the price table (plays/monetary unit):

Programming information	Operation	Displays 1	2	3
Switch-over from play mode to service mode	pull out plunger	P01		xxx
	Press key(s)		SP:	GW:
Select a program step	"C"	P		
Direct selection of program step, Display of previous setting in P41.	"41", "H".	P41	xx	xxx
New setting in P41 "1 play/30p".	"01", "02", "H".	P41	01	030
Advance to next program step, Display of previous setting in P42.	"H"	P42	xx	xxx
New setting in P42 "2 plays/50p".	"02", "050", "H".	P42	02	050
Advance to next program step, Display of previous setting in P43.	"H"	P43	xx	xxx
New setting in P43 "5 plays/1 £".	"05", "100", "H".	P43	05	100
Advance to next program step, Display of previous setting in P44.	"H"	P44	xx	xxx
For only 3 classes setting "00 000".	"00", "000", "H".	P44	00	000
Advance to next program step, Display of previous setting in P45.	"H"	P45	xx	xxx
For only 3 price classes setting "00 000"	"00", "000", "H".	P45	00	000

Caution! Press "C" key in the event of incorrect programming or when display flashes.

Press "C" key twice or close hood to **return to standard program (play mode).**

Monetary Value Settings:

The individual coin channels must be programmed for the associated monetary values in the corresponding program steps: Channel 1 for 20 pence in program step P51, channel 2 for 50 pence in program step P52, channel 3 for 10 pence in program step P53. Channel 4 (P54) and channel 5 (P55) are not used; both must be programmed with the monetary value "0"!

Checking the monetary value settings: Select a program step between P50 and P55 (see description under "setting price table"). After inserting a certain coin the channel associated with the coin is displayed, e.g. 50 pence in channel 2: Display P52 050.

Changing the monetary value settings: As a example, the 20 pence slot (channel 1) is not to be used: First enter program step P51 as described in point 1. In the coin acceptor or on the adapter PCB of electronic coin validators the respective channel has to be blocked also so that these coins drop into the coin return.

Programming information	Press keys	Displays 1	2	3
Direct selection of program step, Display of previous setting in P51.	See text.	P51	xx	xxx
New setting; no coin conversion	"000", "H".	P51		xxx

If the standard setting according to the table is to be used thereafter, frist switch on program step P50 (as described previously).

Ready for standard setting P50 through P55.	See text.	P50		
Program standard table 1.	"1", "H".	P50		1

Press "C" key twice or close cabinet hood and **return to standard program (play mode).**

4. CD CHANGE/CASH COLLECTION

- Open machine and activate cabinet switch (pull out plunger) to enter into service mode. Display 3 automatically shows the least played CD.
- By pressing "1" successively, the next best CD is shown each time.
- Unlock magazine, swing out; pull out the corresponding CD holders to change CD´s. After changing push back CD holders until they lock in.
- Change corresponding title cards, unlock flip-chart unit and flap down. Get desired program tables in position with the button on the PCB of the right-hand side of the unit.
- Read counters: P03 = Cash total
  P04 = Counter for plays
  P05 = Number of selected titles
  P06 = Number of selected albums
  P07 = Number of free credits provided
  P08 = Number of background CD´s played
- Erase counters: P10, Code "1", counters P01 to P08 are erased.
- For more information see "Statistics and Service Programs", Section 1.1., Statistics Program, P01 to P12!

Statistics and Service Programs CD

P01	Popularity beginning with least played CD upwards			P02	Popularity beginning with most played CD downwards	BUTTON
	No. of least played CD				No. of most played CD	0
	No. of next least played CD				No. of next most played CD	1
	Rank of CD displayed				Rank of CD displayed	2
	Times played				Times played	3
	Information about a certain CD				Information about a certain CD	4
P03	Total cash in monetary units			P04	Counter of played titles	0
	Total cash cumulative in monetary units/100.				Counter of played titels accumulated	1
P05	Number of selected title			P06	Counter of album selections	
P07	Number of free credit			P08	Counter of played album titles	
P10	Cancel of counters			P12	Transfer of NSM DATA PRINT	
	Popularity, HIT-Parade, Counter P03-P08, Credit				Counter P03-P08	1, H
	Popularity (P01, P02), HIT-Parade				Counter P03-P08, Settings P21-P56	2, H
	Counter P03-P08				Popularity, Counter P03-P08	3, H
	Credit				Pop counter P03-P08, Settings P21-P56	4, H
P20	Autom. programming of the prog. steps P21-P39 according to table					1, H
P21	Unit code	P22	No. max. CD-Tracks to be selected	P23	No. of free credits	x, H
P24	Random play interval	P25	No. of CD's progr. for backgr. music	P26	Light generator for stand by *)	x, H
P27	Light generator/organ for play *)	P28	Maximum volume			x, H
P38	Autorization with code numb.	P39	Code number			x, H
P40	Autom. programming of the steps P41 thru P46 (play/cash value) according to table					x, H
P46	No. of credits for an album selection					x, H
P50	Autom. programming of the steps P51 thru P56 (coin value acceptance) to table					x, H
P56	Bonus credit for Bill					x, H
P60	Test programs					x, H
P61	Programming optional Numbers of CD-Tracks					xxxx, H

*) If installed

Test Programs

	(Interrupt/run)	H
P60	Display 1 / Disp. 2 / Display 3 — Error Display	
	Display and light test: F 1	1, H
	Input test: F 2 — Port.No. / Bit-No. / Status	2, H
	Continuous Run 1 (playing continuously): F 3 — Number of errors	3, H
	Continuous Run 2 (repeatedly playing): F 4 — Number of errors	4, H
	CD = Changer test: F 5 — x x x — x x "2" = Lift upwards "8" = Lift downwards "4" = Grip left "6" = Grip right "5" = Return holder "0" = Keep lift position OPTO stepper control OPSTP OPTO endposition OPEND OPTO grip right OPGRR OPTO pickup center OPPUM OPTO grip left OPGRL With Display "0" = lit up With Display "1" = darkened	5, H
P61	Number of track numbers	xxxx, H

Error Messages

Er	Error	Action
0x	EPROM	Check or replace corresponding component or unit. See special information in "TROUBLE SHOOTING".
1x	RAM	
2x	Program	
3x	Verifaction	
4x	Price settings	
5x	Coin mechanism/ Bill vallidator	
6x	CD-Player	
7x	CD-Changer	
8x	Wallbox-Connection	

Short instruction:
For statistics and service programs; test programs, error displays.

Detailed description in Section 3 "Statistics and Service Programs" as well as Section 14 "Trouble-Shooting".

STATISTIC-AND SERVICE PROGRAMS

FOR NSM-PHONOGRAPHS

ES IV-CD TECHNOLOGY

3

NSM
APPARATEBAU
GmbH & Co. KG
Postfach 1564 - 1565 6530 Bingen 1 · Germany · Allemagne
Saarlandstraße 240 · Telefon (06721) 407-0 · Telex 04 2216

PART-№
209 820 A

INDEX

1. SERVICE PROGRAM
1.1. Statistics program
1.1.1. Popularity beginning with least played title upwards
1.1.2. Popularity beginning with most played title downwards
1.1.3. Reading counters
1.1.4. Erasing counters and credits
1.1.5. Data transfer

1.2. GENERAL SETTINGS
1.2.1. Standard settings
1.2.2. Code for NSM DATA PRINT
1.2.3. Position settings
1.2.4. Free credits
1.2.5. Random discs
1.2.6. Light organ/generator (only for phonographs with LP light generator
1.2.7. Volumes for normal and background titles
1.2.8. Authorization
1.2.9. Change of key code

1.3. PRICE SETTINGS
1.3.1. Standard settings
1.3.2. Price table (plays/monetary value)

1.4. MONETARY VALUE SETTINGS
1.4.1. Standard settings
1.4.2. Monetary values (for Channels 1 to 5)

1.5. TESTING PROGRAMS
1.5.1. Display test, Display 1 "P60"
1.5.2. Entry test, Display 1 "P60"
1.5.3. Continuous Run 1
1.5.4. Continous Run 2
1.5.5. Test CD changer
1.5.6. Selection of CD and track numbers

1. SERVICE PROGRAM

When opening the cabinet and activating the cabinet interlock switch (pull out plunger), the phonograph is automatically switched from play mode to service mode.
In the service mode the user has available many valuable and easy-to-use aid programs. There are five main sections:

1. Statistical programs which support the reading, evaluating, printing and erasing of all counters (P01 to P12).
2. Programs which permit a standard setting by the manufacturer as well as settings for customers of all machine parameters (P20 to P39).
3. Programs which make possible an individual setting of a price table, but also offer the selection of a standard table out of 20 tables altogether (P40 to P46).
4. Programs which make possible the individual coin value setting for five channels, but also permit programming of one standard setting available for many countries (P50 to P56).
5. Testing programs which support a quick functional test of units as well as locating an error on location (P60/P61).

At delivery the phonograph is "non-coded," e.g. all data and programs are accessible in the service mode. Of course, all confidential data - they are marked in the last column of the following table by an **"X"** - can be locked via entry of a 4-digit code number (P39).

Short Program

After opening the cabinet and activating the cabinet switch manually, the statistical program "popularity" is automatically turned on. Display 1 shows program step **"P01," Display 3 shows the least played CD.**
Continue on to the following program steps by pressing "H."
When desiring another program step, press "C," Display 1: "P."
After that one can select a program step **directly** by entering the desired program number and pressing "H."
Return to normal program by pressing **"C"** twice.
Information (read-out of counters) of certain program steps through entry of code numbers.
Additional functions of certain program steps through entry of a code number and "H."
Standard settings in program steps **P20, P40** and **P50** through entry of table number and **"H"** within that program step.

SELECTOR and DISPLAY PANEL

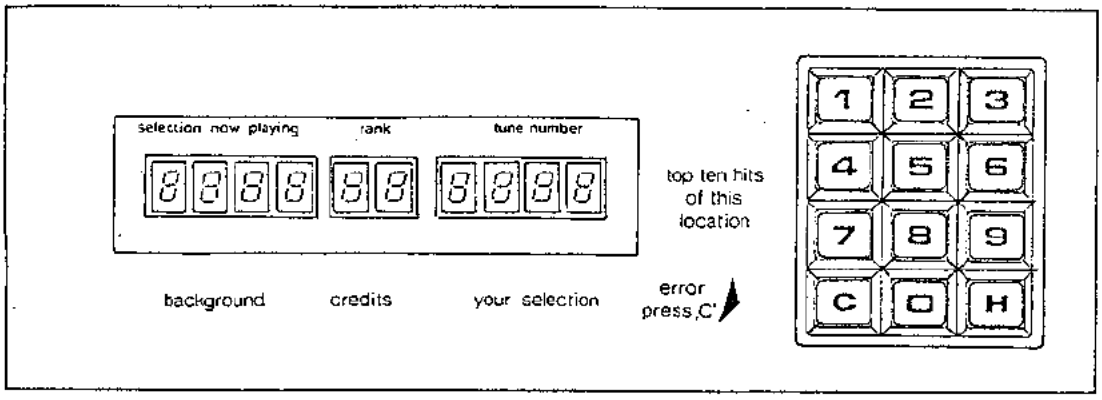

Display panel with displays 1, 2 and 3 as well as 12 button selector

1.1. Statistical program

1.1.1. Popularity-from least played title upward

Display	Designation	Remarks	x
P01	Number of least played CD.	Enter number "0" (is switched on automatically)	
	Number of next least played CD, etc. upwards to the most played CD.	Advance with "1".	
	Rank of CD displayed.	Enter the number "2". The next display corresponds to the rank of this record Example display "5" corresponds to the fifth least played record.	
	Total of this CD played (max. 255).	Enter number "3" If a pop. counter is greater than 200 at "power off", all counters are divided by 2 (normalized). An "r" appears on display 2 until the counters are reset (the pop. display is relative).	
	Information on a certain CD.	Enter the number "4", the desired CD number and "H". The desired information on this CD can be called up as described previously with the keys "1" through "3".	

1.1.2. Popularity, from best title upwards

P02	Number of most played CD.	Enter number "0" (is switched on automatically).	
	Number of next most played CD etc. down to the least played CD.	Advance with "1".	
	Rank of CD displayed.	Enter the number "2". The next display corresponds to the rank of this record. Example display "5" corresponds to the fifth least played record.	
	Total of this CD played (max. 255).	Enter number "3" If a pop. counter is greater than 200 at "power off", all counters are divided by 2. An "r" appears on display 2 until the counters are reset. Get actual popularity, multiply all by 2.	
	Information on a certain CD.	Enter the number "4", the desired CD number and "H". The desired information on this CD can be called up as described previously with the keys "1" through "3".	

1.1.3. Counter read-out

P03	Cash balance in monetary units (as programmed by the settings in P51 through P55). 5 digits.	Enter number "0" (is switched on automatically).	x
	Cash balance-accumulated-5 digits.	Enter the number "1" Value shown must be multiplied by 100 to get total monetary units.	x
P04	Play counter.	Enter number "0" (is switched on automatically).	x
	Play counter, accumulated	Enter number "1".	x
P05	Number of selected title.	Enter number "0" (is switched on automatically).	x
P06	Number of album selections.		x
P07	Number of free credits.		x
P08	Number of background titles.		x

1.1.4. Counter and credit reset

Display	Designation	Remarks	x
P10	Total reset of popularity (P01, P02) the HIT-parade, the counters P03 through P08 and credits.	Enter number "1" and "H".	x
	Resetting the popularity (P01, P02) and HIT-parade.	Enter number "2" and "H".	
	Resetting the counters (P03 through P08).	Enter number "3" and "H".	x
	Cancel credits.	Enter number "4" and "H".	

1.1.5. Data transfer

P12	Transfer to NSM-DATA PRINT. Note: If phonograph is "coded", only the decoded values are printed out unless the code number is entered.	Plug printer into the "service socket" on the control unit. "1" = counters (P03 through P08) or "2" = counters (P03 through P08), settings (P21 through P37, P39) or "3" = counters (P03 through P08), popularity (P01, P02) or "4" = enter counters, settings, popularity, If overflow has taken place, the popularity is relative, the multiplying of overflows is printed out also. If the printer does not operate, "E0" appears on display 3.	

1.2. Specific Settings

1.2.1. Standard Settings

Display	Designation	Remarks	x
P20	Programming of steps P21 through P39 (for factory setting see table 1).	Press "1" and "H". If values deviating from the table are desired, they can be entered according to the following program steps.	x
Standard table for specific settings in program step P20. The following table shows the basic setting (factory setting) of the phonograph.			
Tab.No.	Result in the individual program step: P21 0000 = unit code (for recording device) P22 0024 = maximum choice CD/track (100 CD's/24 tracks) P23 200 = free credits P24 15 = interval for random play in minutes P25 10 = Number of CD's for background P26 1105 = light organ during standby } Only for models with light organ/ P27 1000 = light organ during play } luminous effects P28 3116 = maximum Volume of both channels for coin-selected titles and background-CD P39 0000 = code number (data and program settings not coded)		

1.2.2. Code number for NSM DATA PRINT

P21	Machine code number for NSM DATA PRINT	Enter code number between "0" and "9999" as well as "H".	x

1.2.3. Position Settings

P22	Number of maximum choice CD/tracks	Enter desired number between "0101" and "0099" as well as "H". CD Nr. 00 = 100.	

1.2.4. Free credits

P23	Number of free credits.	Enter desired number and "H". "0" to "199" The number of free credits set can be released individually by the FREE CREDIT key on remote control. "200" An unlimited number of free credits can be set and released by the FREE CREDIT key on remote control. "201" The phonograph is continuously switched to "free credits" when the FREE CREDIT key is pressed (Credit Display "99"). The phonograph is switched back to operating mode when the FREE CREDIT key is pressed again.	x

1.2.5. Random title and Background

P24	Time interval for random title.	Enter desired time interval between "0" and "255" minutes, followed by "H". (No random titles are played when "0" is entered).	x
P25	Number of background music-CD.	Enter desired number between "0" and "100", followed by "H". Background starts counting downwards starting with maximum number of CD's up (P22) to set number of background positions. With setting "0" no background operation.	x

1.2.6. Light Console/Light Organ (Only for models with light organ/luminous effects)

Display	Designation	Remarks					x
		A	B	C	D		
P26 P27	Luminous effects for "stand by mode" or Luminous effects for "play mode"	0 ↓ 1	0 ↓ 3	0 ↓ 1	1 ↓ 5	Setting "A" corresponds to the switching characteristics: "0"-slow to "1"-fast. Setting "B" corresponds to speed of intervals (0-3). Setting "C-D" corresponds to the various types of light effects "1" through "15". Complete entry with the "H"-button.	x
P26 P27	Continuous light for "stand by mode" or Continuous light for "play mode"	0	0 ↓ 3	0	0	Setting "B" corresponds to the desired brightness ("0" through "3"). Complete entry with "H"-button.	x
P27	Light organ in "play mode".	1	0 ↓ 3	0	0	Setting "B" is for the desired basic brightness ("0" through "3"). Complete entry with the "H"-button.	x

1.2.7. Volumes for Regular and Background Music

P28	Maximum volume.	Enter two digits each for desired maximum volume of normally chosen and background titles as well as "H". e.g.: 31 24 24 — Background 31 — Normal	x

1.2.8. Authorization

P38	Authorization.	Enter correct code number and "H". Each of the four digits is confirmed by "P". After closing with "H" "PPPP" is shown and the operator is thereby given authorization. Only the correct code number enables access to protected data. After closing of cabinet or going back to regular program by pressing "C" twice, the programs are protected again.	

1.2.9. Code number

P39	Code number.	Changing of code number is only possible when operator has been authorized in program step P38. Enter new code number and "H". Each digit is confirmed after entry with "P". After closing with "H" "PPPP" is shown. Possible entries between "0000" and "9999". If "0000" is programmed, the machine is not protected and access to all programs is possible without authorization. A programmed code number is not show anymore, so please remember your code number!	x

1.3. PRICE SETTINGS

1.3.1. Standard Settings

Display	Designation	Remarks	×
P40	Programming of the program steps P41 through P46 (Standard setting).	Enter corresponding table No. and "H". If values deviating from those in the table are desired, they can be changed according to the following program steps (P41 through P46).	×

Standard settings for plays per monetary value in program step P40. The result of the programming of a table ("0" through "20") shows the number of plays per monetary value allocated to the program steps P41 through P45.
The monetary values ar programmed in monetary value units as they are set in P50 through P55: example table 17, P41: If no bonus is to be given for a high monetary value, it is sufficient to program only the small monetary value, the total of the small values results in the larger value;
example table 17: 1x25 c = 1 play + 100 c = 7 plays.
Standard settings for P46 = "0".

Table-No.	Display of Program Number P41 Sp/Gw	P42 Sp/Gw	P43 Sp/Gw	P44 SP/Gw	P45 SP/Gw	Remarks/ as set by the factory				
0	00 000	00 000	00 000	00 000	00 000	no coin conversion in this setting.				
1	01 005	01 005	01 005	03 010	03 010	if desired, please adjust	1 play 3 plays	= =	5,- 10,-	
2	01 005	01 005	01 005	05 020	05 020	Belgium	1 play 5 plays	= =	5,- 20,-	Bfr Bfr
3	01 005	01 005	03 010	03 010	07 020	if desired, please adjust	1 play 3 plays 7 plays	= = =	5,- 10,- 20,-	
4	02 005	02 005	05 010	05 010	12 020	Austria	2 plays 5 plays 12 plays	= = =	5,- 10,- 20,-	öS öS öS
5	02 010	02 010	05 020	05 020	12 050	Germany	2 plays 5 plays 12 plays	= = =	1,- 2,- 5,-	DM DM DM
6	01 050	01 050	01 050	03 100	03 100	New Zeeland	1 play 3 plays	= = 2x	50 50	c c
7	02 010	02 010	02 010	12 050	12 050	Norway	2 plays 12 plays	= =	1,- 5,-	Kr Kr
8	01 010	01 010	03 020	03 020	03 020	Venezuela	1 play 3 plays (7 plays	= =	1,- 2,- 5,-	Bol Bol Bol)
9	01 010	01 010	03 020	03 020	10 050	Ireland	1 play 3 plays 10 plays	= = =	10 20 50	p p p
10	03 010	03 010	07 020	07 020	18 050	Switzerland	3 plays 7 plays 18 plays	= = =	1,- 2,- 5,-	sfr sfr sfr
11	01 020	01 020	04 050	04 050	09 100	if desired, please adjust	1 play 4 plays 9 plays	= = =	2,- 5,- 10,-	
12	01 020	01 020	01 020	03 050	03 050	Jugoslavia (Din) Finland (mk)	1 play 3 plays	= 2x =	1,- 5,-	
13	01 020	01 020	03 050	03 050	07 100	Union of South Africa (c) United Kingdom (p) France (Fr) Denmark (dkr)	1 play 3 plays 7 plays	= = =	20 50 1,-	c/p c/p R/£
14	01 040	01 040	02 060	03 080	04 100	Australia	1 play 2 plays 3 plays 4 plays	= 2x = 3x = 4x =	20 20 20 1	c c c Dollar
15	01 025	01 025	01 025	01 025	01 025	Canada	1 play	=	25	c
16	01 025	01 025	01 025	05 100	05 100	Dutch Antilles (NAF) Spain (prs) USA (c)	1 play 5 plays	= =	0,25 1,-	
17	01 025	01 025	03 050	03 050	07 100	if desired, please adjust	1 play 3 plays 7 plays	= = = 2x	25 50 50	
18	01 025	01 025	05 100	05 100	15 250	Netherlands	1 play 5 plays 15 plays	= = =	25 1,- 2,5	c hfl hfl
19	01 100	01 100	03 200	03 200	05 300	Japan	1 play 3 plays 5 plays	= = 2x = 3x	100 100 100	Yen Yen Yen
20	01 010	01 010	01 010	06 050	06 050	Italy	1 play 6 plays	= =	100 500	L L

1.3.2. Price List (Number of Selections/Monetary Value)

Display	Designation	Remarks	x
P41	Number of selections per coin (smallest value).	Enter desired number of plays per coin (smallest value) and "H". Entry sequence: 2 digits for number of plays. 3 digits for corresponding coin e.g. 01 020 correspond to one play for 20 pence. Largest programmable number of plays up to 63, price list from 005 to 995. Note: All five program steps must be programmed with the price classes in the sequence of their priority. For less than 5 price classes program more than once or set to "00 000".	x
P42	Operating and display are analogous to program step P41		x
P43			x
P44			x
P45			x
P46	Number of required credits for one album.	Enter desired number and "H". At "0" no album selection allowed.	x

1.4. MONETARY SETTINGS

1.4.1. Standard Settings

P50	Programming of the program steps P51 through P55 (Standard setting).	Enter corresponding table and "H". If values other than those in the table are desired, they can be changed according to the following program steps (P51 through P55).	x

The monetary value settings in the individual program steps are associated with the corresponding coin channel: P51 for channel 1; P52 for channel 2, etc. to P55 for channel 5. This table shows the coin values for the corresponding channel in the currency of the country in columns P51 through P55.
Standard setting of P56 = "0".

Table-No.	Display of Program Number P51 (Kanal 1)	P52 (Kanal 2)	P53 (Kanal 3)	P54 (Kanal 4)	P55 (Kanal 5)	Remarks/ as set by the factory
0	000	000	000	000	000	no coin conversion in this setting
1	010 1,- DM 1 Bol 1,- sfr	050 5,- DM 5 Bol 5,- sfr	020 2,- DM 2 Bol 2,- sfr	000 -,- -,- -,-	000 -,- -,- -,-	 Germany Venezuela Switzerland
2	005 5 S	020 20 S	010 10 S	000 -,-	000 -,-	 Austria
3	020 200 L	010 100 L	050 500 L	000 -,-	000 -,-	 Italy
4	000 -,- -,- -,-	050 5 mK 5 Kr 5 Din	010 1 mK 1 Kr 1 Din	000 -,- -,- -,-	000 -,- -,- -,-	 Finland Norway Jugoslavia
5	025 25 C	250 2,5 hfl	100 1 hfl	000 -,-	000 -,-	 Netherland
6	000 -,-	100 1,- NAF	025 0,25 NAF	000 -,-	000 -,-	 Netherland Antillen
7	000 -,-	020 20 Bfr	005 5 Bfr	000 -,-	000 -,-	 Belgium
8	010 1 Fr 1 dkr	050 5 Fr 5 dkr	100 10 Fr 10 dkr	000 -,- -,-	000 -,- -,-	 France Denmark
9	020 20 p	050 50 p	010 10 p	000 -,-	000 -,-	 United Kingdom/Ireland
10	010 10 c	050 50 c	025 25 c	000 -,-	100 1 Dollar	 USA
11	000 -,-	025 25 c	000 -,-	000 -,-	100 1 Dollar	 Canada
12	020 20 c	100 1 R	050 50 c	000 -,-	000 -,-	 Union of South Afrika
13	100 1 Dollar 100 Yen	050 50 c 50 Yen	020 20 c 20 Yen	000 -,- -,-	000 -,- -,-	 Australia Japan
14	100 10 Fr 1 £	020 2 Fr 20 p	010 1 Fr 10 p	050 5 Fr 50 p	000 -,- -,-	 France (Mars-Coin Acceptor) United Kingdom
15	000 -,-	025 25 pts	100 100 pts	000 -,-	000 -,-	 Spain

1.4.2. Monetary Values (Allocated to coin channels 1 through 5)

Display	Designation	Remarks	x
P51	Coin value channel 1.	Enter desired coin value for channel 1 and "H". Example: "010" corresponds to 10p, "020" to 20p and "100" corresponds to 1 £. Note: When a coin is inserted in the program steps P50 through P55 the channel assigned to this coin is automatically displayed on display 1; P51 for channel 2, etc. to P55 for channel 5. Not used channels are set to "0"! The programmed monetary units for P51 through P55 must correspond to the unit programmed by the cash counter (P03), e.g. 050 units for 50p, 020 units for 20p and 100 units for 1 £.	x
P52			x
P53	Operation and display		x
P54	are analogous to program		x
P55	step P51.		x
P56	Bonus credits for bills.	Enter desired number and "H". When a dollar bill is inserted (Channel 5/P55), the programmed value is added to the credit.	x

1.5. TEST PROGRAMS

The displays in this program step acts as test aids for testing the phonograph.
In the event of a malfunction the defective unit can be determined or a malfunction resulting from incorrect settings can be recognized in a simple manner with the aid of these tests. Certain displays are aids for the adjustment of the playing mechanism.

Switch on test program: Open cabinet lid pull out interlock cabinet switch
Dispaly 1 shows "P01", press letter "C".
Display 1 shows "P".
Press number 60 and H, Display 1 shows "P60".

1.5.1. Display Test, Display 1 "P60"

This program tests the lights and displays on the display circuit board. After starting "F1" (first function test) appears on display 2.
The test is run through in steps: 1. All 5 display lights together.
2. The digits are switched on one after another individually with "8".
3. The display lamps 1 through 5 individually.
4. Displays together, running through the numbers "0" through "9".
The "F1" is displayed for approx. 2 seconds before the test repeats, itself.

Designation	Remarks
Display test -continuous test-	Enter "1" and "H". Display 2 "F1".
Stop test sequence	Enter "H". The light "10 top hits" comes on.
Contime test sequence	Enter "H" again. The light "10 top hits" goes off.
Terminate test.	Enter "C" once, display 1 "P60" or actuate cabinet switch, the unit returns to the regular program.

1.5.2. Input Test, Display 1 "P60"

In the following test the functions of all entries of input Ports 1-5 can be tested:
Port 1, Port 2: Control unit
Port 3 : Keyboard (Display Board)
Port 4, Port 5: Pickup Diver
Every input change is shown on the display as follows:

Input Test	Enter "2" and "H", Display 2 "F2" (second function test) Display 1 2 3 [ ][ ][ ][ ] [F][2] [ ][x][x][x] — Bit information (Switch Status 1 or 0) Bit Number (0 to 7) Port Number; 0 = Control Unit IC 8 1 = Control Unit IC 9 2 = Keyboard IC 304 3 = Pickup Driver IC 1 4 = Pickup Driver IC 2 1 2 3 [ ][ ][ ][ ] [F][2] [ ][1][6][0] Meaning of the displays: "F 2" = Input Test "1" = Port 1 (IC 9) "6" = Bit 6 (Key Switch) "0" = Switch Status 0 (closed) Instruction: The accuracy of the inputs from the keyboard can be checked due to the entry connections simply by selecting a title!
Terminate test.	Enter "C" 1, display "P60" or actuate cabinet switch, the phonograph returns to the normal program.

1.5.3. Continuous Run 1

The machine is switched to continuous run. Now every CD is played continuously for 16 sec. beginning with the first selection. All errors of the CD changer or CD player are registered.

Continuous Run 1	Enter "3" and "H", Display 2 "F3". After that select the CD with which to begin. Display: 1 2 3 [ ][ ][ ][ ] [F][3] [ ][x][x][x] — Number of errors
Terminate test.	Actuate housing switch.

1.5.4. Continuous Run 2

The machine is switched to continuous run. All selected titles are played for 16 sec. All errors of the CD changer or player are registered.	
Continuous Test2	Enter "4" and "H", Display 2 "F4". The select any title. Display: 1 2 3 [ ][ ][ ][ ] [F][4] [x][x][x] — Number of errors
Terminate test.	Actuate housing switch.

1.5.5. CD changer Test

All functions of the changer can be tested individually.	
CD changer test	Enter "5" and "H", Display 2 "F 5". Input — Function 2 — Lift upwardw 8 — Lift downwards 4 — Grip left 6 — Grip right 5 — Return holder 0 — Kepp lift position (10 sec.) Keep in mind the code numbers for the individual changer functions as per the following keyboard illustration: The time in sec. during which the lift position is held. The lift position is held after every function for 2 sec., by touching "0" for 10 sec. Displays: 1 2 3 [x][x][x][ ] [F][5] [x][x][x][x] — OPTO stepper control OPSTP — OPTO end position OPEND — OPTO grip right OPGRR — OPTO pickup center OPPUM — OPTO grip left OPGRL Meaning of displays: OPTO lit up = "0", OPTO darkened = "1".
Terminate test.	Actuate housing switch.

1.5.6. Track selection of CD test records

P61	Track selection of CD test records (more than 15 tracks per record).	Select the required CD record and track number and press "H". e.g. 0123 - Disc 01, Track 23. The selected title will be stored and played after returning to play mode.

1.5.7. Read-out of Occurring Errors

P62	Error code of error that happened just before (see description trouble-shooting)	Enter code "0". (is automatically turend on)
	Error code of errors happening previously (see description trouble-shooting)	Continue with key "1". Max. up to 10 errors.
	Time since power on or since begin of test P60/3 or P60/4 when error occurs.	Enter code "2". Display in hours, minutes.
	CD number at which error occurred.	Enter code "3".
	Deletion of error codes in momory.	Enter code "4", "1" and "H".

UNIT DESCRIPTION

CONTROL UNIT

FOR NSM-PHONOGRAPHS

ES IV-CD TECHNOLOGY

4

NSM
APPARATEBAU
GmbH & Co. KG
Postfach 1564 - 1565 6530 Bingen 1 Germany · Allemagne
Saarlandstraße 240 · Telefon (06721) 407-0 · Telex 04 2216

PART-№
209 821

INDEX

1. FUNCTION
1.1. Control unit
1.2. Processor
1.3. Reset
1.4. Low voltage recognition and power off
1.5. I/O (input/output)
1.6. Output enable
1.7. Service plug

Spare parts list

Schematics CONTROL UNIT CD

1. FUNCTION

1.1. CONTROL UNIT

The heart of the control and credit unit is a microprocessor from the proven Rockwell 6500 family.
All unit functions such as keyboard, display, remote control, carriage (light generator/organ), coin mechanism, etc. are controlled by this unit.

Different types of malfunctions are recognized and reported as such on the display. All statistical data such as phonograph status, price adjustments and bookkeeping data are stored in the CONTROL UNIT. These as well as credits remaining are stored when the power is switched off.
Connection of the NSM DATA PRINT is provided at Plug 11.

A number of service programs allow the read-out of statistical data, individual as well as test programs.

1.2. Processor

The processor consists primarily of the microprocessor IC 1, the EPROM IC 2, the battery RAM IC 3 and the I/O component IC 4. Address coding occurs via IC 12.

The tact generator consists of a quartz oscillator with Q 1 (4 MHz) and the frequency divider (1:4) IC 14.

1.3. Reset

The Zener diode ZD 2 with transistors T 1 and T 2 serves to activate the reset when U (+ 5 V) is less than 4,6 V.
Transistor T 2 with its antenna connection serves to recognize static discharges and interferences.

When T 2/C is LOW, reset is activated via IC 16, Pin 10, Pin 11. If T 2/C is HIGH, reset remains stored for approx. 200 msec. over the subsequent monoflop 1/2 IC 13 with timing components R 14, C 19 vis IC 16, Pin 9.

1.4. Low Voltage Recognition and Power Off

Resistors R 15, R 16, R 18 form a voltage divider for low voltage recognition.
R 17 and D 6 generate a hysteresis when the voltage rises again. The positive edges (10 msec. at 50 Hz, 8.3 msec. at 60 Hz) coming from T 3/C retrigger the monoflop 1/2 IC 13 with timing components R 20, C 20 (approx. 20 msec.) and IC 13, Pin 4 at LOW. This signal is monitored by the processor via IC 4, Pin 6.
When IC 4, Pin 6 is HIGH, the program is prematurely deactivated.

1.5. I/O (Input/Output)

All I/O operations are controlled via a serial bi-directional interface (IC 4, Pin 18 = CLOCK; IC 4, Pin 19 = DATA). IC 18 selects the different input channels; IC 11 decodes the load impulses for the output channels.

Output: IC 5 and IC 6 are output ports.
Resistors R 22-40 together make two D/A converters. The DC signals obtained thereby control the volume and are conducted to the amplifiers via plugs ST 2, Pin 2, Pin 3.

Input: IC 8 and IC 9 are input ports.
The resistors, in sequence to the input pins, protect the CMOS components.

Serial interfaces are available:
At ST 3 for control of the light generator
At ST 4 for display and keyboard
At St 8 for control of CD changer

1.6. Output - Enable

A clock signal is sent by IC 4, Pin 5. Capacitor IC 26 is charged and keeps IC 15, Pin 8 at LOW.
If the clock signal does not occur, IC 15, Pin 14 is LOW and OE of IC 5 and IC 6 is inactive (outputs in tree state).
OE also becomes inactive via D 1 when reset (IC 16, Pin 11) becomes LOW.

1.7. Service Plug

Plug ST 11 serves to connect with the NSM DATA PRINT.

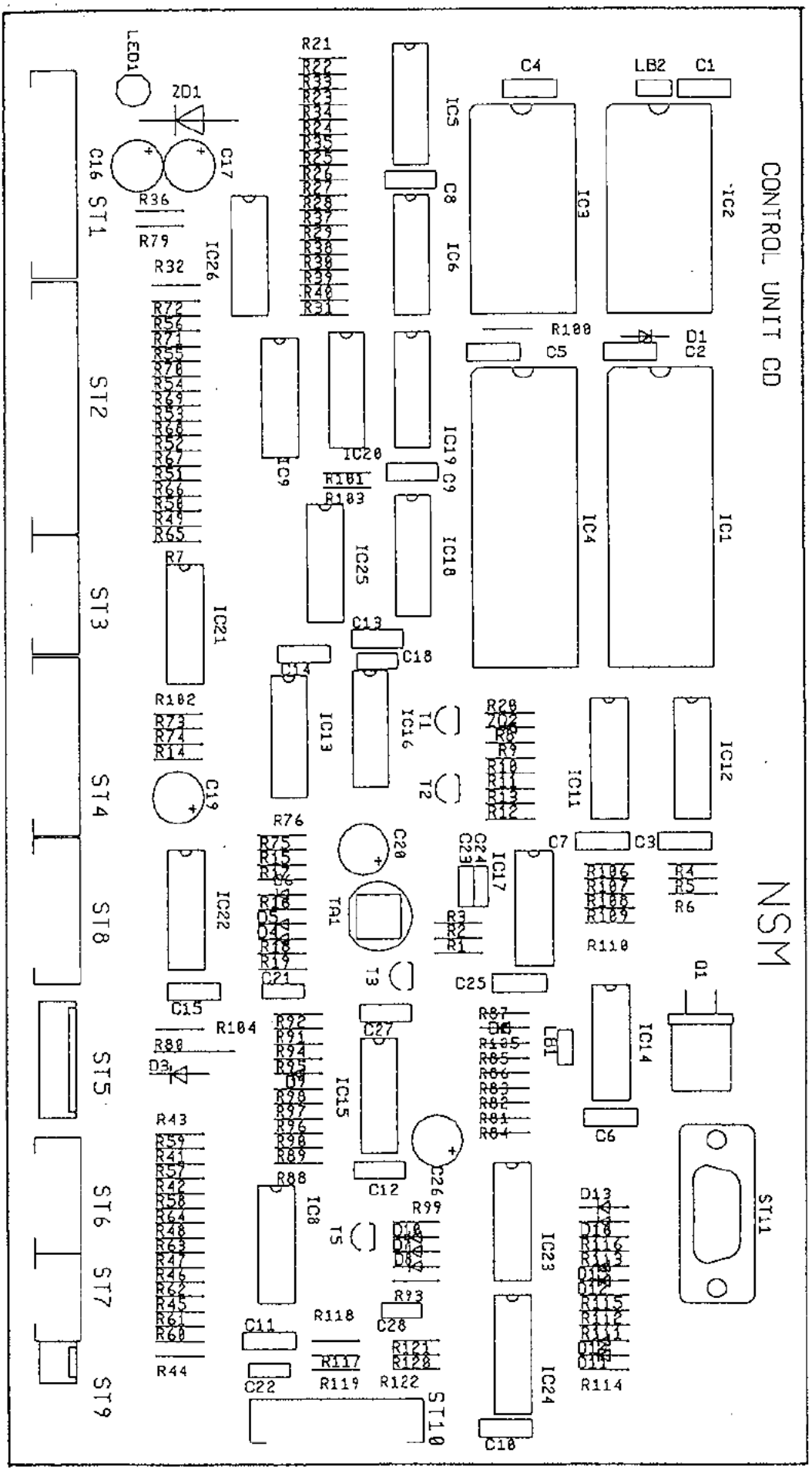
CONTROL UNIT CD
NSM
IC1
IC2
IC3
IC4
IC5
IC6
IC8
IC9
IC11
IC12
IC13
IC14
IC15
IC16
IC17
IC18
IC19
IC20
IC21
IC22
IC23
IC24
IC25
IC26
ST1
ST2
ST3
ST4
ST5
ST6
ST7
ST9
ST10
ST11
LED1
ZD1
LB2
LB1
D1
D3
Q1
T1
T2
T3
T5
TA1

SPARE PARTS LIST

POS.	PART-№	DESCRIPTION	DATA	QTY
	173 663	CIRCUIT BOARD-CONTROL UNIT CD, ASSY	50/60 Hz	1
IC 2	173 699	IC-MEMORY (PROGRAMMED)	AM 27 128 C	1
	173 698	PROFILE, ASSY		2
	229 175	SPACER		4
	212 384	COVER		1
ST 07	225 651	PIN PANEL	4 PRONGS	1
ST 03, 06	225 652	PIN PANEL	6 PRONGS	2
ST 04	225 654	PIN PANEL	10 PRONGS	1
ST 01	225 655	PIN PANEL	12 PRONGS	1
ST 02	225 656	PIN PANEL	15 PRONGS	1
ST 09	225 439	PIN PLUG	3 PRONGS	1
ST 05	225 444	PIN PLUG	8 PRONGS	1
ST 11	225 828	D-MINIATUR-CONNECTOR	SOCKET 9 PRONGS	1
Q 1	221 535	OSCILLATOR QUARTZ	4 MHZ	1
	222 446	IC-SOCKET for IC 3	24 PRONGS	1
IC 3	231 394	IC-MEMORY	MK 48 Z 12-20	1
	222 447	IC-SOCKET for IC 2	28 PRONGS	1
	222 448	IC-SOCKET for IC 1 and 4	40 PRONGS	2
IC 1	231 413	IC-MICROCOMPUTER	R 65 C 02	1
IC 4	231 415	IC-MICROCOMPUTER	VL 65 C 22	1
IC 8, 9	221 763	IC-CMOS	HEF 4021 B	2
IC 5, 6	221 771	IC-CMOS	HEF 4094 B	2
IC 21-23	221 541	IC-CMOS	F 4049 BC	3
IC 16	221 665	IC-TTL	SN 74 LS 00	1
IC 19	221 525	IC-TTL	SN 74 LS 03	1
IC 17	221 652	IC-TTL	SN 74 LS 04	1
IC 14, 20	221 705	IC-TTL	SN 74 LS 74 A	2
IC 13	221 792	IC-TTL	SN 74 LS 123	1
IC 12	221 653	IC-TTL	SN 74 LS 139	1
IC 18	221 852	IC-TTL	SN 74 LS 151	1
IC 11	221 796	IC-TTL	SN 74 LS 138	1
IC 15	221 813	IC-LINEAR	LM 339	1
IC 26	221 497	IC-LINEAR	ULN 2003 A	1
D 3	221 115	SI-DIODE	1 N 4004	1
D 1, 2, 4-16	221 114	SI-DIODE	1 N 4148	16
ZD 1	221 539	TRANSZORB-DIODE	IC-TE 5	1
ZD 2	221 984	ZENER-DIODE	ZPD 3,9	1
LED 1	221 466	LIGHT EMITTING DIODE	LR 3160-F	1
T 1, 2	221 757	TRANSISTOR	BC 547 B	2
T 3, 5	221 283	TRANSISTOR	BC 212 B	2
C 22	220 181	CER.-CAPACITOR	47 pF	1
C 23	220 242	CER.-CAPACITOR	68 pF	1
C 24	220 185	CER.-CAPACITOR	270 pF	1
C 18, 28	220 263	CER.-CAPACITOR	1000 pF	2
C 21	220 341	CER.-CAPACITOR	4700 pF	1
1-15, 25, 27	220 334	MKT-CAPACITOR	0,1 µF 63 V	17

SPARE PARTS LIST

POS.	PART-№	DESCRIPTION	DATA	QTY
C 19, 20, 26	220 159	LYTIC	4,7 µF 63 V	3
C 17	220 162	LYTIC	10 µF 63 V	1
C 16	220 160	LYTIC	100 µF 10 V	1
R 8, 9, 116	221 600	RESISTOR	100 OHM 1/4 W	3
R 12, 19, 79	221 099	RESISTOR	470 OHM 1/4 W	3
R 93	221 622	RESISTOR	820 OHM 1/4 W	1
R 10, 87	221 029	RESISTOR	1 KOHM 1/4 W	2
R 13	221 031	RESISTOR	2,2 KOHM 1/4 W	1
R2-6,102-104, 106-110	221 033	RESISTOR	3,3 KOHM 1/4 W	13
R84,88,89,94,100, 101,105,113	221 034	RESISTOR	4,7 KOHM 1/4 W	8
R 18	221 625	RESISTOR	5,6 KOHM 1/4 W	1
R 1, 15	221 172	RESISTOR	8,2 KOHM 1/4 W	2
R11,20,74,76,82,83, 90-92,96,8	221 035	RESISTOR	10 KOHM 1/4 W	15
R16,21,27,33-40, 73,75,85	221 604	RESISTOR	22 KOHM 1/4 W	14
R 17	221 601	RESISTOR	27 KOHM 1/4 W	1
R22-26,28-32,41-72,98,99	221 038	RESISTOR	100 KOHM 1/4 W	3
R14,81,86,95	221 048	RESISTOR	100 KOHM 1/4 W	4
R 80	221 273	RESISTOR	10 KOHM 1/2 W	1

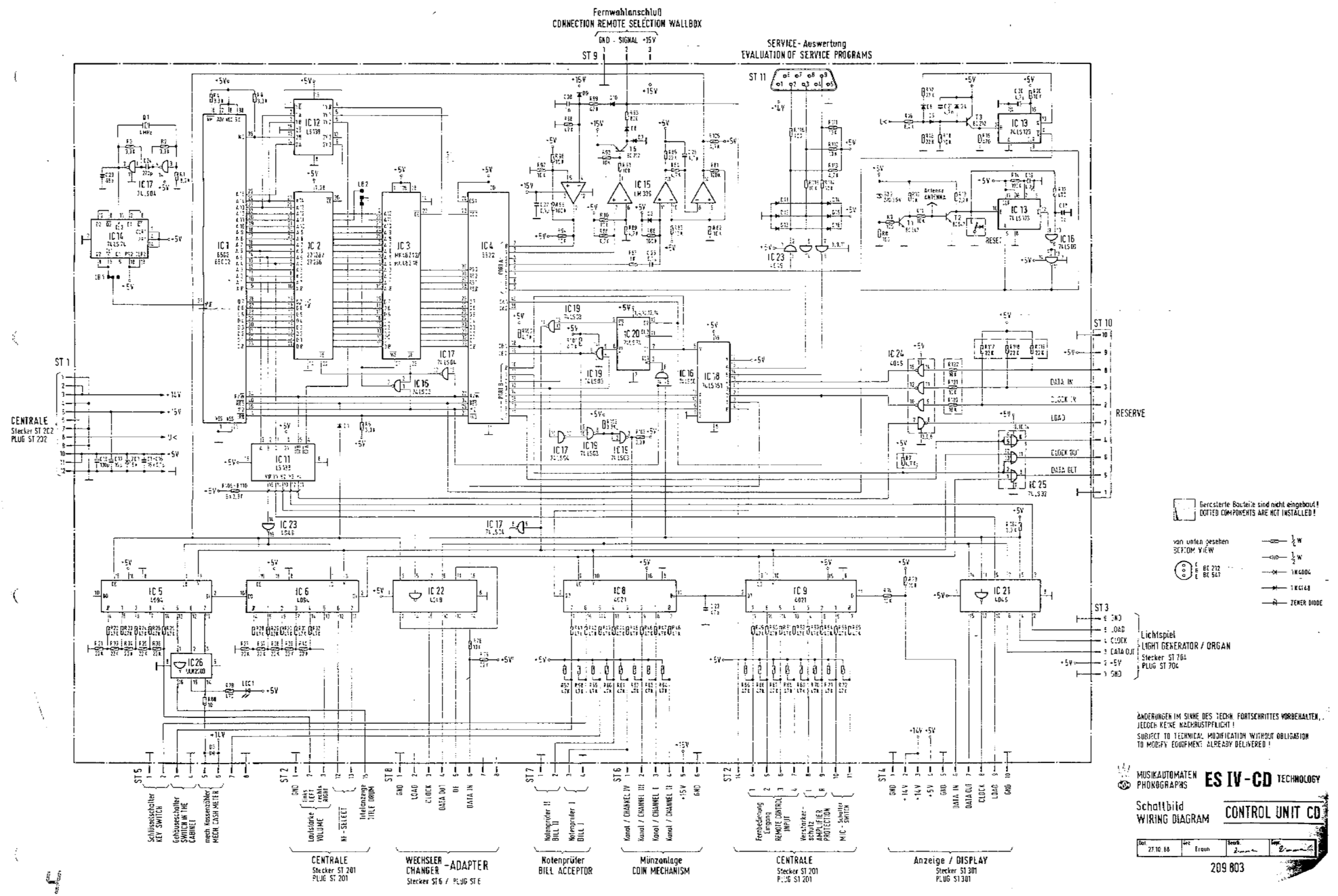
Fernwahlanschluß
CONNECTION REMOTE SELECTION WALLBOX
GND - SIGNAL +15V
ST 9
SERVICE - Auswertung
EVALUATION OF SERVICE PROGRAMS
ST 11
ST 10
RESERVE
DATA IN
CLOCK IN
LOAD
CLOCK OUT
DATA OUT
ST 1
CENTRALE
Stecker ST 202
PLUG ST 202
ST 3
Lichtspiel
LIGHT GENERATOR / ORGAN
Stecker ST 704
PLUG ST 704
Gestrichelte Bauteile sind nicht eingebaut!
DOTTED COMPONENTS ARE NOT INSTALLED!
von unten gesehen
BOTTOM VIEW
BC 212
BC 547
ZENER DIODE
ÄNDERUNGEN IM SINNE DES TECHN. FORTSCHRITTES VORBEHALTEN, JEDOCH KEINE NACHRÜSTPFLICHT!
SUBJECT TO TECHNICAL MODIFICATION WITHOUT OBLIGATION TO MODIFY EQUIPMENT ALREADY DELIVERED!
MUSIKAUTOMATEN
PHONOGRAPHS
ES IV-CD TECHNOLOGY
Schaltbild
WIRING DIAGRAM
CONTROL UNIT CD
27.10.88
Braun
209 803
Schlüsselschalter
KEY SWITCH
Gehäuseschalter
SWITCH IN THE CABINET
mech. Kassenzähler
MECH. CASH METER
CENTRALE
Stecker ST 201
PLUG ST 201
Lautstärke
VOLUME
NF - SELECT
Titelanzeige
TITLE DRUM
WECHSLER-ADAPTER
CHANGER
Stecker ST 6 / PLUG ST 6
Notenprüfer
BILL ACCEPTOR
Münzanlage
COIN MECHANISM
Fernbedienung
REMOTE CONTROL INPUT
Verstärkerschutz
AMPLIFIER PROTECTION
M/C - Schalter
SWITCH
Anzeige / DISPLAY
Stecker ST 301
PLUG ST 301

UNIT DESCRIPTION

DISPLAY / KEYBOARD

FOR NSM-PHONOGRAPHS

ES IV-CD TECHNOLOGY

5

NSM
APPARATEBAU
GmbH & Co. KG
Postfach 1564 – 1565 · 6530 Bingen 1 · Germany · Allemagne
Saarlandstraße 240 · Telefon (06721) 407-0 · Telex 042216

PART-№
209 822

INDEX

1. FUNCTION
1.1. Display
1.2. Keyboard

Spare parts list

1. FUNCTION

1.1. Display

The shift registers IC 301 through IC 303 are the output ports for the display control.
The display is operated in the multiplex mode.
The segment information is prepared for one digit with IC 302 and IC 303 via drivers IC 308 and IC 309.
The transistors T 303 through T 305 are controlled by IC 307 via IC 301 and switch on the appropriate multiplex level for 4 milliseconds.

Resistors R 332 to R 345 determine the segment current.

Lamps L 1 to L 5 are controlled statically via IC 307, Pin 12 and 14 and IC 306, Pin 19, 11, 12.
Resistors R 325 to R 329 limit the transient current.

The load signal for the output shift registers is monitored by circuit IC 306, Pin 4 and 13, R 306, C 303, D 301.
During the duration of the load signal the display is dark.
C 303 is discharged via D 301 and IC 306, Pin 13.
OE of IC 301 to IC 303 becomes LOW and thereby inactive.
If no load signal occurs, OE becomes inactive via R 305.
Capacitor C 302 avoids lighting up of the digits after switching on.

1.2. Keyboard

IC 301 is an input port for the keyboard which is connected to plug St 302.
The circuit with diodes D 302 - D 307 and transistors T 306, T 307 codes the keyboard matrix to a 4-bit signal combination.

SPARE PARTS LIST

POS.	PART-№	DESCRIPTION	DATA	QTY
	173 664	CIRCUIT BOARD-DISPLAY CD, ASSY		1
ST 302	225 663	PIN PANEL	8 PRONGS 90°	1
ST 301	225 664	PIN PANEL	10 PRONGS 90°	1
AZ 1-8	231 416	DISPLAY	TD SL 5150	10
	173 384	TUBUS		1
	171 629	HOLDER		4
IC 310	221 573	IC-VOLTAGE	12 V 1 A	1
IC 301-303	221 771	IC-CMOS	HEF 4094 B	3
IC 304	221 763	IC-CMOS	HEF 4021 B	1
IC 306-309	221 497	IC-LINEAR	ULN 2003 A	4
D 301-307	221 114	SI-DIODE	1 N 4148	7
ZD 301	231 079	ZENER-DIODE	ZPD 4,7	1
T 301-305	231 240	SI-TRANSISTOR	BC 636 F	5
T 306, 307	221 283	SI-TRANSISTOR	BC 212 B	2
C 303-307	220 334	MKT-CAPACITOR	0,1 µF 63 V	5
C 308, 309	220 332	MKT-CAPACITOR	0,33 µF 63 V	2
C 302	220 249	LYTIC	1 µF 63 V	1
C 301	220 162	LYTIC	10 µF 63 V	1
R 301	221 611	RESISTOR	10 OHM 1/4 W	1
R 306,332-350	221 627	RESISTOR	1,2 KOHM 1/4 W	20
R302-304,307-309, 314-317,319-323,354	221 033	RESISTOR	3,3 KOHM 1/4 W	16
R 310-313	221 038	RESISTOR	47 KOHM 1/4 W	4
R 305	221 009	RESISTOR	1 MOHM 1/4 W	1
R 325-329	231 366	MET.-RESISTOR	10 OHM 1/4 W	5
	173 900	KEY BOARD, ASSY		1

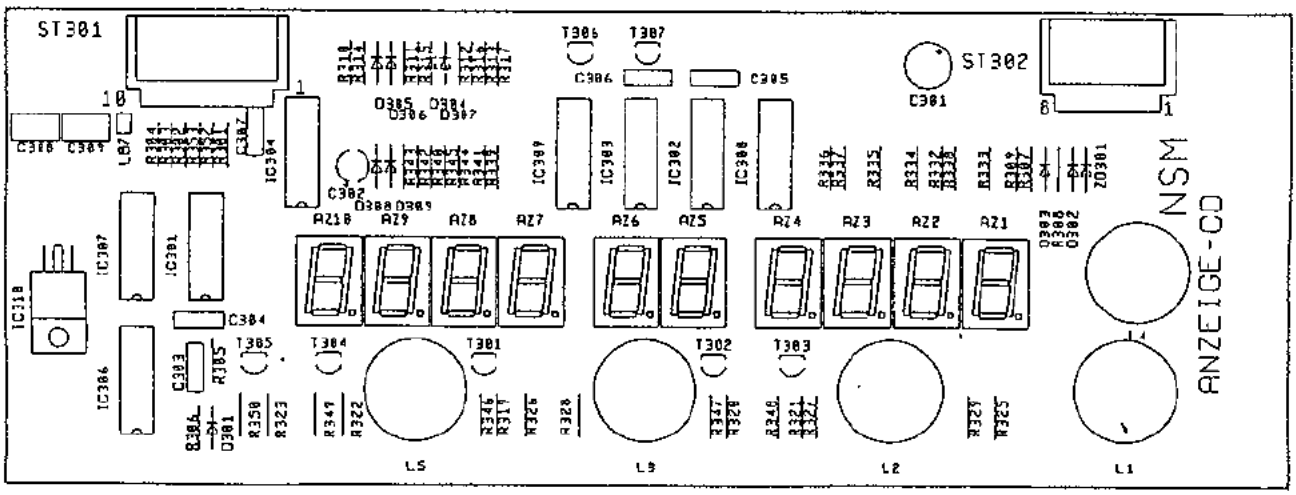

UNIT DESCRIPTION

CENTRAL UNIT

FOR NSM-PHONOGRAPHS

ES IV-CD TECHNOLOGY

6

NSM
APPARATEBAU
GmbH & Co. KG
Postfach 1564 + 1565 6530 Bingen 1 · Germany · Allemagne
Saarlandstraße 240 · Telefon (06721) 407-0 · Telex 042216

PART-№
209 823

Index

1. FUNCTION
1.1. Power supply
1.2. Amplifier
1.3. Signal path
1.4. Adjustment of controls
1.5. MIC socket, microphone connection
1.6. TB socket
1.6.1. Tape recorder connection
1.6.2. Connection of auxiliary amplifier

2. Adjustment instructions for trimmer of central unit and output stage

3. Repair aid

3.1. Output stage
3.2. Control of volume and muting
3.3. Tracing sound signal

1. Function

The power supply, fan controls, stereo amplifier with inputs for microphone, CD and tape are all integrated on one circuit board. The output stages and the fan are connected to the central unit via ST 209, ST 210, ST 211. The music power per channel is 200 watts when matched to a loudspeaker impedance of 2 ohms.

1.1. Power Supply

The power transformer supplies 22 V, 2 x 11,5 V and 2 x 43 V from three separate secondary coils. The supply voltage for the output stages is supplied with 2 x 43 V by a two-way rectifier (D 206) and the center tap of the transformer.
The supply voltage for the voltage regulator VR 201, + 5 V is supplied with 2 x 11,5 V by a two-way rectifier (D 201/202) and the center tap on the transformer. The low voltage recognition is accomplished by D 204 and D 205. Fusing is accomplished with Si 201 and Si 202. Fusing for the output stage is accomplished with Si 204 and Si 205.
The conrol voltage of +15 Va, for the pickup driver, coin mechanism, control unit, remote control, luminous effects as well as the supply voltage for the preamplifier of +15 Vb, are supplied by the 22 V transformer coil and rectified by D 207 through 210 and VR 203. Fusing is accomplished by Si 203.

The LED's indicate the following supply voltages at the same intensity:
LED 201 = + 5 V
LED 202 = + 60 V
LED 203 = + 15 V a
LED 204 = + 15 V b
The TRIAC TIC 200 controls the output stage fan depending upon the operational state of the amplifier (REJECT); i.e. the fan only runs when the amplifier is not muted.

1.2 Amplifier

The stereo amplifier is equipped with two tone control IC's, one AF switch IC, 50 diodes and 17 transistors.
The output stage is designed without induction coils or transformers and is therefore ironless.
At full volume level the music power is 200 watts per channel.

1.3 Signal path

The input signal MIC goes to microphone amplifier T 230 and background mixer of TA, TR 231 to Pins 4 and 8 of IC 230. The TB input is connected to Pins 3 and 7. The CD input is connected to Pin 2 and Pin 6.
In the play mode the signal goes from Pin 2 to Pin 15 respectively through Pin 6 and Pin 9.

When the microphone switch is actuated, the signal goes from Pin 4 to Pin 15 or from Pin 8 to Pin 9.
In the tape mode (TB/Pin 6 to ground) the signal goes from Pin 3 to Pin 15 or Pin 7 to Pin 9 when the switch is actuated. In the MIC, CD or TB stage, muting is switched off regardless of the operating state of the phonograph. The stage "MIC" has priority switching.

From the AF switch (IC 230) the signal goes via an AVC (automatic volume control) T 250, T 251 at Pin 9 of the tone control IC 251 with associated bass booster. Treble control is accomplished with TR 252 and bass control with TR 253. The control voltage for the volume and muting is on Pin 5; approx. 2,5 V at full volume, approx. 0 V while muting.

The DC signal for the volume setting is supplied by the control unit.
Signal Output Pins 3 and 6 of IC 251 are routed through a network to the driver stage for the output stage.

The parallel complementary power Darlington transistors T 151 through T 154 in the output stage allow a minimum loudspeaker impedance of 2 ohms.
Quiescent current compensation and thermic stabilization is accomplished with T 150, the quiescent current setting with TR 250. The amplifier is equipped with three protective circuits against overload mismatching, thermic overload.

1) T 155 acts as a threshold switch for the electronic fuse. When the emitter current of the output transistors exceeds a certain value, T 252 is switched through by T 155 switching on the muting and thereby limiting the current.

2) The actuation of the electronic fuse at collector T 252 is controlled by the control unit.
When its fuse is tripped a number of times within a certain period, the volume is reduced automatically by one step each time until the electronic fuse is no longer activated.

3) The thermal switch on the heat sink switches off the power supply to the output stage when the heat sink temperature reaches approx. 90 C (cooling malfunctioning). LED 150 is dark. The switch-on point (following cooling down) is approx. 60 C (switch-on hysteresis).

The terminating impedance at the loudspeaker output should not be less than 2 ohms. In the case of mismatching (less than 2 ohms), or short-circuit in the loudspeaker cable, the limiting circuit is actuated.
The result is distorted sound reproduction or reduction of the volume. After elimination of the mismatch the amplifier is ready for operation and the volume can be readjusted.
The volume difference between the two channels is compensated at the factory by setting the levelling potentiometer TR 254.

1.4 Adjustment of Controls

TR 230 = microphone volume
TR 231 = music fade-in for microphone mode
TR 252 = treble control
TR 253 = bass control

TR 230 for setting the microphone amplifier:
This adjustment is dependent upon the position of the phonograph in relation to the microphone and required microphone volume.
In case of feedback while paging, the control must be turned counterclockwise or the microphone be positioned in another direction to the speakers.

TR 231 for music fade-in in microphone mode:
There the desired music volume level during paging can be controlled.

TR 252 R and **TR 252 L**, treble controls, are to be set according according to the locations.
The maximum position is suggested in acoustically balanced rooms only.

TR 253 R and **TR 253 L**, bass controls, must also be set according to the locations and the desired bass reproduction.

1.5 MIC socket, Microphone Connection

A dynamic microphone with an impedance of 200 ohms - 600 ohms with switch for relay control can be used.
NSM option accessories:

Microphone	Order No. 224 223	
Connection cable	Order No. 171 880	(10 m long)

1.6 TB Socket

1.6.1. Tape Recorder Connection

The TB socket allows the music from the phonograph to be recorded on a tape recorder as well as music from a tape recorder to be played by the phonograph.

The AF signal (analog signal) for recording with a tape recorder is on Contacts 1 and 4 and can be connected directly with a stereo diode cable; Contacts 2, 7 and 8 (8 is ground).

1.6.2. Connection of Auxiliary Amplifier

An auxiliary amplifier can be connected to the TB socket. The AF signal can be fed directly from the TB socket (Contacts 1 and 4) to the input of the amplifier with a stereo diode cable.
The input sensitivity of the external amplifier should be 200 mV at a minimum input impedance of 47 K ohms.

Note: A stereo diode cable with a 5-pin plug is suitable for the above connections. In this plug Pin 1 must be connected to Pin 1; 3 to 3; etc.
The stereo recording cable is **not suitable** because in such cables Pin 1 is connected to 3 and 4 to 5 (crossed.)

2. Adjustment Instructions for Trimmer of Central Unit and Output Stage

TR 150 for quiescent current adjustment of the output stage: The quiescent current must be set to 40 mA + 5 mA. After replacement of the output transistor T 151 through T 154 a correction may be required.
Important! Muting is to be switched off for measuring and setting. The lift will be put in play position, the volume control is set at 0 and Si 150 or the thermal switch are replaced by an ampere meter.

TR 201 and **TR 202** for adjustment of volume control voltage:

Maximum volume for regularly selected titles in program step **P** 28 must be programmed to **"31"** (full volume).
Take measurements at test points TP-L and TP-R to ground; nominal value = 2,6 V (factory setting).
The internal resistance of the measuring instrument must be greater than 1 M ohm!
After replacement of IC 251 a correction may be required.

TR 254 R and **TR 254 L**, level controls for adjustment of the total amplification: Set at factory to correspond to the output voltage of the CD player.
Muting must be switched off. Volume, treble and bass set to maximum.
The output voltage on the loudspeaker connection with a load of 4 ohms is approx. 10 V = 25 W power per channel, with the AVC at full level. At minimum impedance of 2 ohms the RMS output corresponds to 100 W RMS or 200 W music power at disc playing.

3. Repair Aid

Amplifier integrated in central unit ES IV

Malfunction: No sound, no output power:
It is assumed that LD 201 to LD 204 glow with the same intensity and that the power supply is therefore O.K., the CD is on the CD player being played, and normal volume was set in program step P28 to "31."

3.1. Output Stage

LD 150 on the output stage circuit board is dark. Malfunction probably located in the output stage; check Si 150 and replace if required. If the fuse blows again, the output transistors are defective.
Remove output stage unit, pull out cover plates on the bottom. Check for short-circuit on transistors T 151/T 152 and T 153/T 154 with ohmmeter. Since the transistors are connected in parallel, it is only possible to test them in pairs.
For individual testing one transistor must be unsoldered from the defective pair. After replacement of the defective transistors the quiescent current must be readjusted with TR 150 according to the adjustment instructions.

3.2. Control of Volume and Muting

In the play mode approx. 2,6 V must be measured on Pin 5 of IC 251 (for full volume).
If the voltage is near 0 V, T 252 or the control "volume L and R" from the computer must be checked as well as the control of T 231 (reject line).

3.3. Tracing Sound Signal

Trace the sound signal arriving at CD plug according to the table.
The point where the signal is missing is probably the cause of the malfunction.

AF Signal Point	Cause of Malfunction When Signal Missing
C 237, C 238	IC 230
IC 251 L/R Pin 9	T 250 / T 251 (AVC)
R 269 L/R (2,6 V at IC 251/Pin 5)	IC 251 L/R
T 255 L/R (collector)	T 253 L/R or T 254

If the signal is there up to T 255, but no output signal arrives at the output stage, plug connectors ST 210/211 as well as the output stage have to be checked.

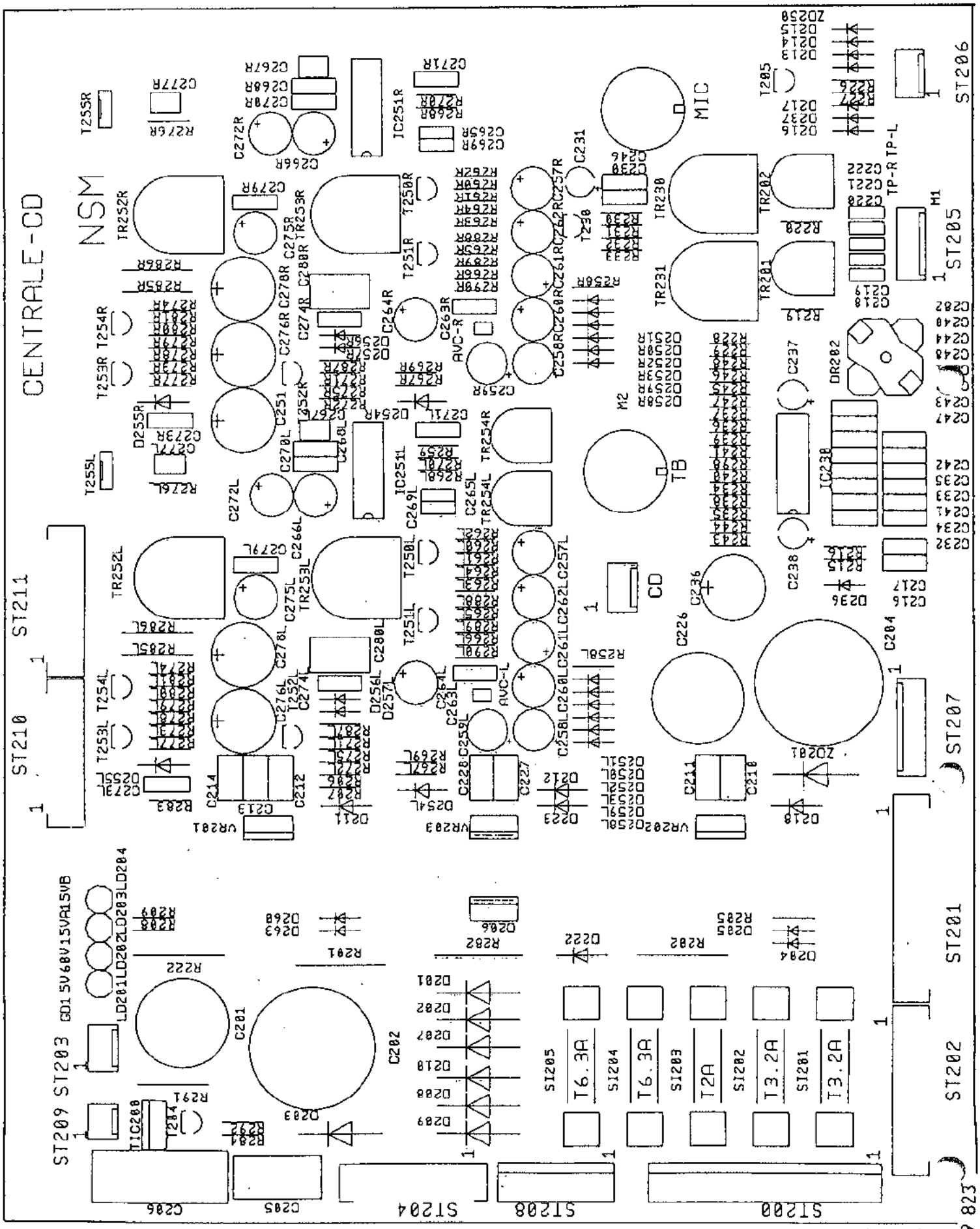
CENTRALE-CD
NSM
MIC
TB
CD
ST211
ST210
ST206
ST205
ST207
ST201
ST202
ST203
ST209
ST204
ST208
ST200
T6.3A
T6.3A
T2A
T3.2A
T3.2A

209 823

SPARE PARTS LIST

POS.	PART-No	DESCRIPTION		DATA	QTY
	173 666	CENTRAL UNIT, ASSY			
SI 203	225 033	FUSE		T 2,0 A bei 50 Hz	1
SI 201, 202	225 029	FUSE		T 3,15 A bei 50 Hz	2
SI 204, 205	225 374	FUSE		T 6,3 A bei 50 Hz	2
SI 203	225 220	FUSE		T 2,0 A by 60 Hz	1
SI 201, 202	225 225	FUSE		T 3,2 A by 60 Hz	2
SI 204, 205	225 218	FUSE		T 6,25 A by 60 Hz	2
	173 730	COOLING PLATE			1
SI 201-205	225 689	FUSE HOLDER			10
	173 698	PROFILE, ASSY			2
	171 754	SHIELDING COVER			1
MIC	225 244	SOCKET		S 5 PRONGS	1
TB	225 749	SOCKET		Mab 8 SV	1
ST 209	225 439	PIN PLUG	RM 2,5	3 PRONGS	1
ST203,206,CD	225 418	PIN PLUG	RM 2,5	4 PRONGS	3
ST 205	225 443	PIN PLUG	RM 2,5	6 PRONGS	1
ST 208	225 328	PIN PLUG	RM 3,96	6 PRONGS	1
ST 207	225 444	PIN PLUG	RM 2,5	8 PRONGS	1
ST 200	225 273	PIN PLUG	RM 3,96	12 PRONGS	1
ST204,210,211	225 654	PIN PANEL	RM 2,5	10 PRONGS	3
ST 202	225 714	PIN PANEL	RM 2,5	12 PRONGS	1
ST 201	225 656	PIN PANEL	RM 2,5	15 PRONGS	1
VR 201	221 572	IC-VOLTAGE		+5 V 1 A	1
VR 202, 203	221 476	IC-VOLTAGE		+15 V 1,5 A	2
IC 230	231 236	IC-LINEAR		TDA 1029	1
IC 251 RL	231 089	IC-LINEAR		TDA 4290-2	2
D201-203,207-210	221 463	SI-DIODE		BY 251	7
D2[illegible]12,218,222,223, 25[illegible],255RL	221 115	SI-DIODE		1 N 4004	9
D204,205,213-217,236, 237,251-253RL,256RL	221 114	SI-DIODE		1 N 4148	27
D 206	231 202	SI-DUO DIODE		BYV 32/100	1
ZD 201	221 821	TRANSZORB DIODE		TVS 515	1
LD 201-204	221 466	LIGHT EMITTING DIODE		LR 3160-F	4
TIC 200	231 028	TRIAC		TIC 206 D	1
T 204, 253 RL	221 459	SI-TRANSISTOR		PNP BC 556 B	3
T230,250RL,251RL	221 249	SI-TRANSISTOR		NPN BC 550 B	5
T 255 RL	221 488	SI-TRANSISTOR		NPN BD 139-10	2
T 252 RL, 205	221 332	SI-TRANSISTOR		NPN BC 337-16	3
C 263 RL	220 342	CER.-CAPACITOR		100 pF	2
C 277 RL	220 185	CER.-CAPACITOR		270 pF	2
C 267 RL	220 274	CER.-CAPACITOR		330 pF	2
C 241, 242	220 241	CER.-CAPACITOR		560 pF	2

SPARE PARTS LIST

POS.	PART-№	DESCRIPTION	DATA		QTY
C 246-248	220 263	CER.-CAPACITOR	1 nF		3
C 243, 244	220 400	KT-CAPACITOR	1,5 nF		2
C 269 RL	220 401	KT-CAPACITOR	3,3 nF		2
C218-222,265RL, 279RL	220 435	KT-CAPACITOR	4,7 nF		9
C 268 RL	220 429	MKT-CAPACITOR	0,15 µF	100 V	2
C 270 RL	220 335	MKT-CAPACITOR	0,022 µF	63 V	2
216,217,230,232-235,239, 0,271RL,273RL,281, 282	220 334	MKT-CAPACITOR	0,1 µF	63 V	15
C 274 RL	220 333	MKT-CAPACITOR	0,22 µF	63 V	2
C210-214,227,228, 280RL	220 332	MKT-CAPACITOR	0,33 µF	63 V	9
C 205	220 336	MKT-CAPACITOR	2,2 µF	63 V	1
C 206	220 460	MKT-CAPACITOR	3,3 µF	63 V	1
C258RL,259RL	220 243	TAN-CAPACITOR	SF 100 µF	3 V	4
C 260 RL	220 249	LYTIC	1 µF	63 V	2
C231,237,238,257RL 261RL,262RL,264RL	220 159	LYTIC	4,7 µF	63 V	11
C266RL,275RL	220 162	LYTIC	10 µF	63 V	4
C 272 RL	220 389	LYTIC	47 µF	10 V	2
C276RL,278RL	220 158	LYTIC	47 µF	40 V	4
C 236	220 160	LYTIC	100 µF	10 V	1
C 251	220 250	LYTIC	100 µF	25 V	1
C 226	220 289	LYTIC	1000 µF	40 V	1
C 201	220 283	LYTIC	2200 µF	25 V	1
C 202	220 286	LYTIC	4700 µF	25 V	1
C 204	220 287	LYTIC	4700 µF	40 V	1
R 276 RL	221 095	RESISTOR	6,8 OHM	1/4 W	2
R259,279RL,287RL	221 611	RESISTOR	10 OHM	1/4 W	5
R 206	221 620	RESISTOR	22 OHM	1/4 W	1
R 277 RL	221 096	RESISTOR	56 OHM	1/4 W	2
R 270 RL	221 600	RESISTOR	100 OHM	1/4 W	2
R 263 RL	221 635	RESISTOR	180 OHM	1/4 W	2
R 264 RL	221 614	RESISTOR	330 OHM	1/4 W	2
R 208	221 099	RESISTOR	470 OHM	1/4 W	1
R 267 RL	221 622	RESISTOR	820 OHM	1/4 W	2
R205,207,269RL, 288RL	221 029	RESISTOR	1 KOHM	1/4 W	6
R 275 RL	221 030	RESISTOR	1,5 KOHM	1/4 W	2
R 209, 283	221 031	RESISTOR	2,2 KOHM	1/4 W	2
R 278 RL, 298	221 033	RESISTOR	3,3 KOHM	1/4 W	3
R 262 RL	221 172	RESISTOR	8,2 KOHM	1/4 W	2
R266RL,226,284,289RL, 292	221 035	RESISTOR	10 KOHM	1/4 W	7
R 219, 220	221 501	RESISTOR	18 KOHM	1/4 W	2
R 268 RL, 227	221 604	RESISTOR	22 KOHM	1/4 W	3
R 290 RL	221 037	RESISTOR	33 KOHM	1/4 W	2
R230,243-248,271RL	221 038	RESISTOR	47 KOHM	1/4 W	9
R 274 RL	221 039	RESISTOR	56 KOHM	1/4 W	2
R 258 RL	221 629	RESISTOR	68 KOHM	1/4 W	2
R 261 RL	221 044	RESISTOR	82 KOHM	1/4 W	2

SPARE PARTS LIST

POS.	PART-No	DESCRIPTION	DATA	QTY
R 273 RL	221 048	RESISTOR	100 KOHM 1/4 W	2
R 272 RL	221 045	RESISTOR	150 KOHM 1/4 W	2
R215,216,234-241	221 049	RESISTOR	470 KOHM 1/4 W	10
R 265 RL	221 981	RESISTOR	560 KOHM 1/4 W	2
R 260 RL	221 041	RESISTOR	820 KOHM 1/4 W	2
R228,229,232,233	221 009	RESISTOR	1 MOHM 1/4 W	4
R 231	221 982	RESISTOR	3,3 MOHM 1/4 W	1
R 285 RL	221 230	RESISTOR	470 OHM 1/2 W	2
R 291	221 183	RESISTOR	1 KOHM 1/2 W	1
R 286 RL	221 210	RESISTOR	1,5 KOHM 1/2 W	2
R201,202,283	221 692	WIRE WOUND RESISTOR	1 OHM 1 W	3
R 222	231 232	WIRE WOUND RESISTOR	6,8 KOHM 1 W	1
R252RL,253RL	231 086	TRIMMER RESISTOR	10 KOHM 0,15 W	4
TR 230	231 233	TRIMMER RESISTOR	1 MOHM 0,15 W	1
TR 231	231 234	TRIMMER RESISTOR	2,5 MOHM 0,15 W	1
	231 235	SHAFT	red Nr. 5214	6
TR 201, 202	221 278	TRIMMER RESISTOR	10 KOHM 0,1 W	2
TR 254 RL	221 414	TRIMMER RESISTOR	100 KOHM 0,1 W	2

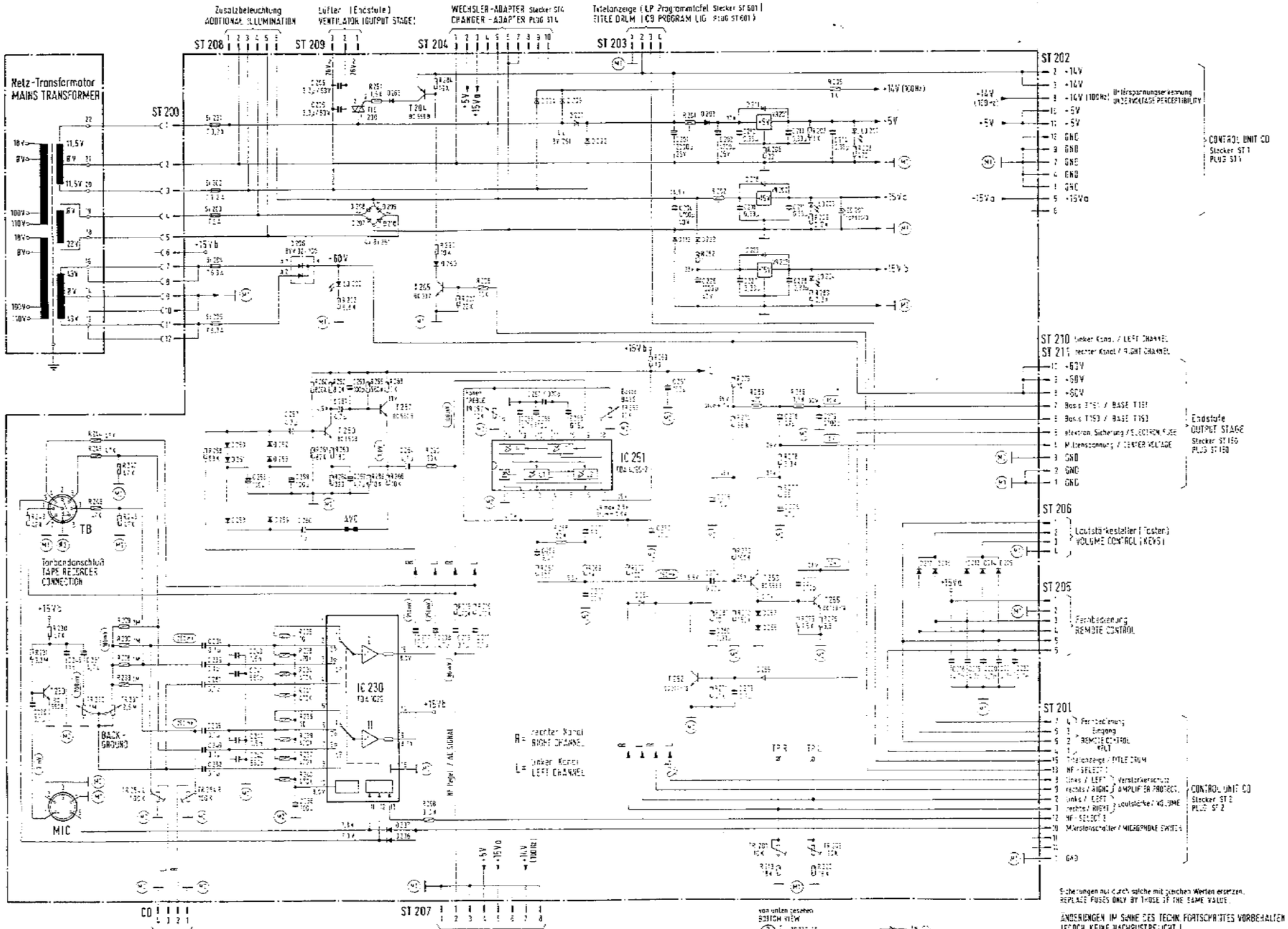
Zusatzbeleuchtung
ADDITIONAL ILLUMINATION
Lüfter (Endstufe)
VENTILATOR (OUTPUT STAGE)
WECHSLER-ADAPTER Stecker ST4
CHANGER-ADAPTER PLUG ST4
Titelanzeige (LP Programmtafel Stecker ST 601)
TITLE DRUM (CD PROGRAM LIG PLUG ST 601)
ST 208
ST 209
ST 204
ST 203
ST 202
Netz-Transformator
MAINS TRANSFORMER
ST 200
CONTROL UNIT CD
Stecker ST 1
PLUG ST 1
ST 210
ST 211
Endstufe
OUTPUT STAGE
Stecker ST 150
PLUS ST 150
IC 251
ST 206
Lautstärkesteller (Tasten)
VOLUME CONTROL (KEYS)
ST 205
Fernbedienung
REMOTE CONTROL
TB
Tonbandanschluß
TAPE RECORDER CONNECTION
IC 230
BACK-GROUND
MIC
ST 201
CONTROL UNIT CD
Stecker ST 2
PLUG ST 2
R= rechter Kanal
RIGHT CHANNEL
L= linker Kanal
LEFT CHANNEL
CD
WECHSLER-ADAPTER
CHANGER-ADAPTER
Stecker ST 2
PLUG ST 2
ST 207
Lichtspiel
LIGHT GENERATOR/ORGAN
Stecker ST 701
PLUG ST 701
von unten gesehen
BOTTOM VIEW
Draufsicht
TOP VIEW
Sicherungen nur durch solche mit gleichen Werten ersetzen.
REPLACE FUSES ONLY BY THOSE OF THE SAME VALUE.
ÄNDERUNGEN IM SINNE DES TECHN. FORTSCHRITTES VORBEHALTEN
JEDOCH KEINE NACHRÜSTPFLICHT !
SUBJECT TO TECHNICAL MODIFICATION WITHOUT OBLIGATION
TO MODIFY EQUIPMENT ALREADY DELIVERED !
MUSIKAUTOMATEN
PHONOGRAPHS
ES IV-CD TECHNOLO
Schaltbild
WIRING DIAGRAM
CENTRALE-CD
26.12.89
Braun
209 806

UNIT DESCRIPTION

OUTPUT STAGE

FOR NSM-PHONOGRAPHS

ES IV-CD TECHNOLOGY

NSM
APPARATEBAU
GmbH & Co. KG
Postfach 1564 - 1565 8550 Bingen 1 Germany Allemagne
Saarlandstraße 240 · Telefon (06721) 407-0 · Telex 042216

PART-№
209824

Output Stage

The output stage is designed without induction coils or transformer and is therefore ironless. At full volume the music power is 200 W per channel when connected to a 2-ohm loudspeaker impedance.

Functions such as power supply, signal path and settings as well as repair aids are described in detail in the unit description "CENTRAL UNIT."

SPARE PARTS LIST

POS.	PART-№	DESCRIPTION	DATA	QTY
	171 701	OUTPUT STAGE, ASSY	50 Hz	1
SI 150	225 036	FUSE	T 4 A slo blo	1
	225 747	CAP		1
	171 702	OUTPUT STAGE, ASSY	60 Hz	1
SI 150	225 542	FUSE	4 A slo blo	1
	225 748	CAP		1
	171 696	CHASSIS		1
	171 881	VENTILATOR, ASSY		1
	171 699	AIR VANE		1
	222 485	TEMPERATUR CONTROLLER		1
		CIRCUIT PLATE - OUTPUT STAGE		1
	225 422	TERMINAL BOARD	3 PRONGS	1
ST 150	225 654	PIN PANEL black	10 PRONGS	1
	225 746	FUSE HOLDER		2
D 150, 151	221 115	SI-DIODE	1 N 4004	2
ZD 150	221 650	SI-ZENER-DIODE	ZPD 33	1
LD 150	221 466	LIGHT EMITTING DIODE	CQE 65	1
T 150	221 883	SI-TRANSISTOR	NPN BD 239 B	1
T 155	221 459	SI-TRANSISTOR	PNP BD 256	1
T 151, 152	221 886	DARLINGTON-TRANSISTOR	NPN BDW 83 C	2
T 153, 154	221 902	DARLINGTON-TRANSISTOR	PNP BDW 84 C	2
C 153	220 333	MET.-CAPACITOR	0,22 µF 63 V	1
C 152	220 162	LYTIC	10 µF 63 V	1
C 154	220 396	LYTIC	4700 µF 50 V	1
C 150, 151	220 436	LYTIC	4700 µF 63 V	2
R 166	221 094	RESISTOR	2,7 OHM 1/4 W	1
R 152, 153	221 096	RESISTOR	56 OHM 1/4 W	2
R 151	231 154	RESISTOR	750 OHM 1/4 W	1
R 159-162	221 029	RESISTOR	1 KOHM 1/4 W	4
R 164	221 032	RESISTOR	2,7 KOHM 1/4 W	1
R 163	221 034	RESISTOR	4,7 KOHM 1/4 W	1
R 154	221 625	RESISTOR	5,6 KOHM 1/4 W	1
R 165	221 604	RESISTOR	22 KOHM 1/4 W	1
R 167	221 267	WIRE WOUND RESISTOR	470 OHM 1 W	1
R 155-158	221 275	WIRE WOUND RESISTOR	0,22 OHM 7 W	4
R 150	221 305	TRIMMER RESISTOR	2,2 KOHM 0,1 W	1

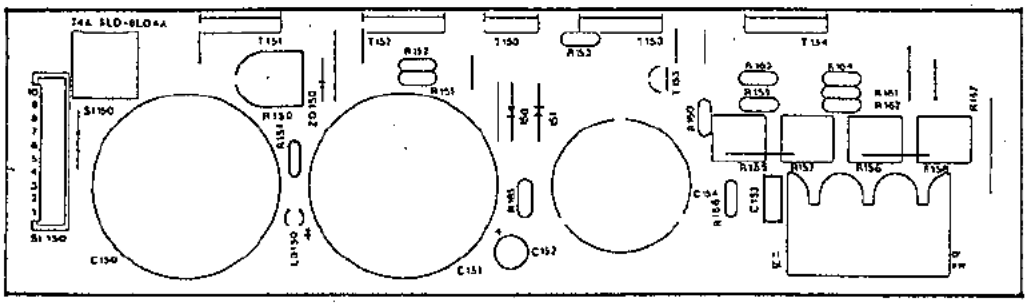

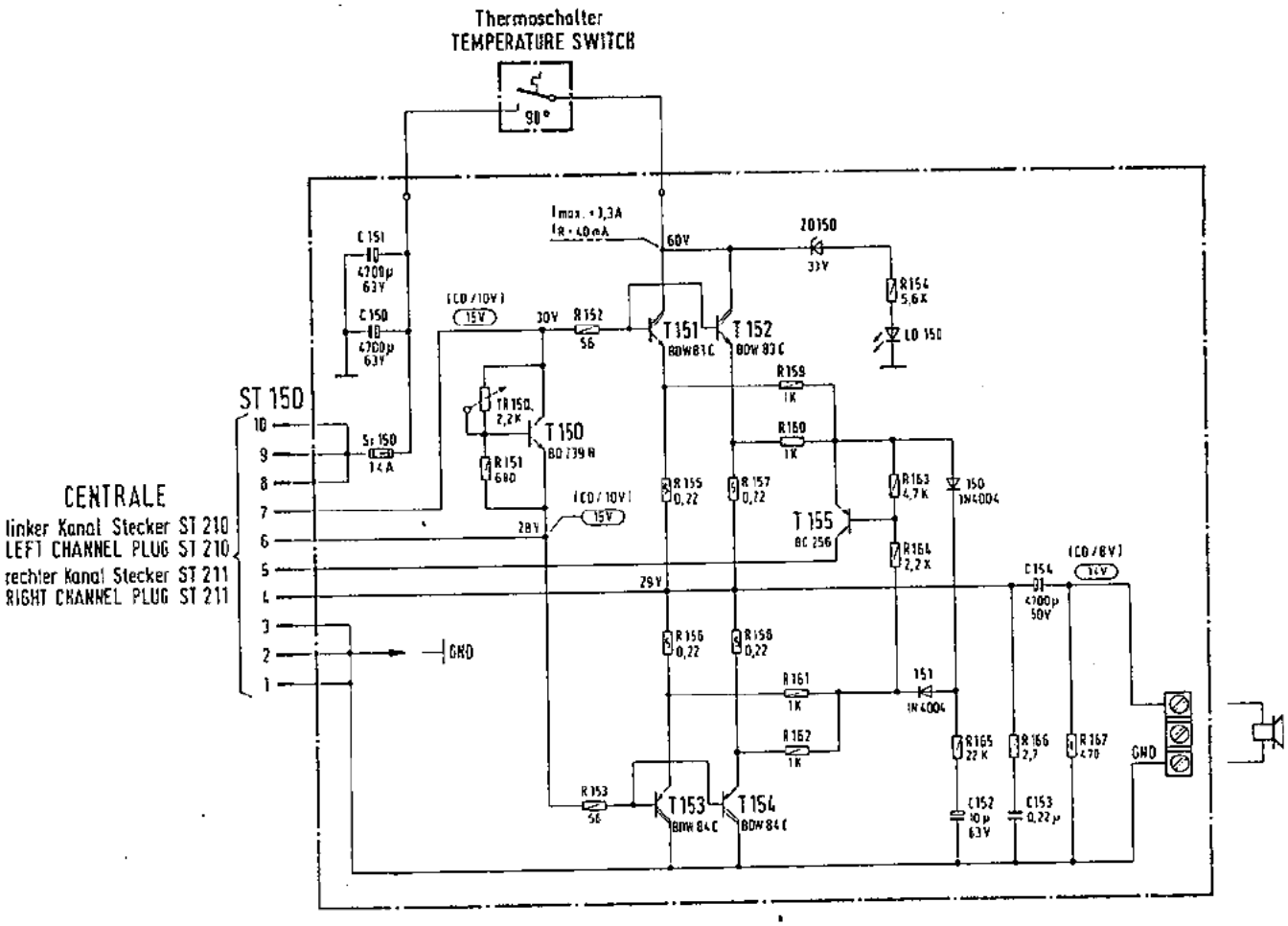

1/4 W

1/2 W

1W

5W

ZD ZENER-DIODE

LD Leuchtdiode
LIGHT EMITTING DIODE

NF-Pegel bei 1KHz, Lautstärkesteller auf max.
Höhen und Bässe max., ohne (CD/mit) AVC gemessen mit elektron. Voltmeter.
Gleichspannung gemessen mit Voltmeter Ri = 10 MΩ

AC SIGNAL VOLTAGES AT 1000cps, VOLUME CONTROL TO MAX. TREBLES AND BASSES MAX., WITHOUT (CD/WITH) AVC MEASURED WITH ELECTRONIC VOLTMETER.
DC VOLTAGES MEASURED WITH VOLTMETER Ri = 10 MEG OHMS.

Draufsicht
TOP VIEW

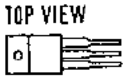

T 150

T 151 - T 154

von unten gesehen
BOTTOM VIEW

T 155

Alle Sicherungen träge !
ALL FUSES SLO BLO !

Sicherungen nur durch solche mit gleichen Werten ersetzen!
REPLACE FUSES ONLY BY THOSE OF THE SAME VALUE !

ÄNDERUNGEN IM SINNE DES TECHN. FORTSCHRITTES VORBEHALTEN, JEDOCH KEINE NACHRÜSTPFLICHT !

SUBJECT TO TECHNICAL MODIFICATION WITHOUT OBLIGATION TO MODIFY EQUIPMENT ALREADY DELIVERED-!

MUSIKAUTOMATEN
PHONOGRAPHS

ES IV-CD TECHNOLOGY

Schaltbild Endstufe
WIRING DIAGRAM OUTPUT STAGE

Dat.	Gez.	Bearb.	Bgm.
27.01.89	Braun		

UNIT DESCRIPTION

CD CHANGER

FOR NSM-PHONOGRAPHS

ES IV-CD TECHNOLOGY

NSM
APPARATEBAU
GmbH & Co. KG
Postfach 1564 • 1565 6530 Bingen 1 Germany: Allemagne
Saarlandstraße 240 · Telefon (06721) 487-0 · Telex 042216

PART-№
209 825

INDEX

1. PICKUP FUNCTION
1.1. Transport
1.2. Pull holder
1.3. Return holder

2. PICKUP DRIVER
2.1. Lift control
2.2. Grip control
2.3. CD-Player control

3. PLAYER
3.1. Disc player CDM 3
3.2. Servo panel

4. PCB DECODER BOARD

5. MAGAZINE

Spare parts lists
Schematics CD changer 100
Wiring diagram PICKUP DRIVER

1. PICKUP FUNCTION

The pickup serves to transport the CD's between the magazines and the player.

ATTENTION! When the CD changer has the switch at the window (upper right), the transport does not function if the window is open.
If the window is opened while the CD is playing, the title will be played to the end, but the CD will only be transported back after the window is closed.

1.1 Transport

The lift is moved via a stepping motor controlled by the microprocessor of the control unit. The distance between 2 CD slots is 8 motor steps (1 opto counter step).
During the run the light barrier OPTSP, which is directly connected to the drivewheel, checks the motor's position every 4 steps. Stepping errors are immediately recognized and displayed with Er 75.
Together with the light barrier OPEND the end position of the lift is verified. Should a mistake appear here (signal too late or early) the display shows Er 76.

1.2 Pull Holder

With both grip levers, brought into lock position by DC motors MOGRL for left and MOGRR for right, the CD holders with their CD's are pulled out of the magazine. The light barrier OPPUM reports the correct position of the CD holder in the pickup unit.
If there is no report 2 sec. after switching on the motor, the display will show Er 71 for the left magazine or Er 72 for the right magazine.

1.3 Return Holder

To return a CD holder to its magazine, either motor MOGRL for the left magazine or MOGRR for the right magazine is switched on in the opposite direction.
Light barriers OPGRL or OPGRR report the end position of the grips.
If the report does not appear within 2 sec. after switching on the motor, the display shows Er 73 for the left magazine or Er 74 for the right magazine.

2.1. PICKUP DRIVER

2.1 Lift Control

With output port IC3 the microprocessor of the control unit controls switch transistors T2-T5 via drivers T6-T9. These drive the unipolar coil of the stepping motor (ST4, Pin 1-6). Using signal OPSTP (ST4, Pin 7) the microprocessor controls the position of the motors.
Together with signal OPEND (ST 3,Pin 8) the end position of the lift is reported via input port IC 1.

2.2 Grip Control

Both of the grip motors (MOGRL for the left magazine and MOGRR for the right magazine) are driven from the double motor bridge IC6 via output port IC3.
While pulling a CD from the magazine the signal OPPUM (ST 3, Pin 7) reports the end position of the CD holder in the pickup to the microprocessor of the control unit.
While returning the CD it recognizes the end position of the grips via signals OPGRL (ST 3, Pin 5) for left and OPGRR (ST 3, Pin 6 for right.

2.3 Control of the CD Player

Microcomputer IC 8 (TO18) is used to convert the incoming serial data in I2C-Bus format from the decoder panel into parallel signals that can be processed.
The microprocessor of the control unit communicates with it via ports IC 4 and IC 2.

3. PLAYER

3.1 Disc Player CDM3

The CDM3 contains the components laser diode, play motor, radial motor, and focus unit.
It reads the data from the CD.

3.2 Servo Panel

The servo panel contains the components to control the CDM3.
They consist primarily of the photodiode signal processor, the radial error processor, the drivers for the laser diode, the focus unit, the radial motor and the playing motor.

4. PCB DECODER BOARD

The components servoprocessor, decoder, digital filter, DA converter and NF output driver are combined on the decoder board.
It also contains the circuit to process the complete power supply for decoder board CDM3 and servopanel.

5. MAGAZINES

2 equal magazines that are equipped with 50 CD holders each are in the CD changer. With different CD holders it is possible to play 5- or 3-inch CD's.
The magazine can be swung out and totally taken out.
Equipping with or changing CD's can be done simply by taking out the respective CD holders, inserting the new CD into the holder and pushing it back till it locks in the magazine.

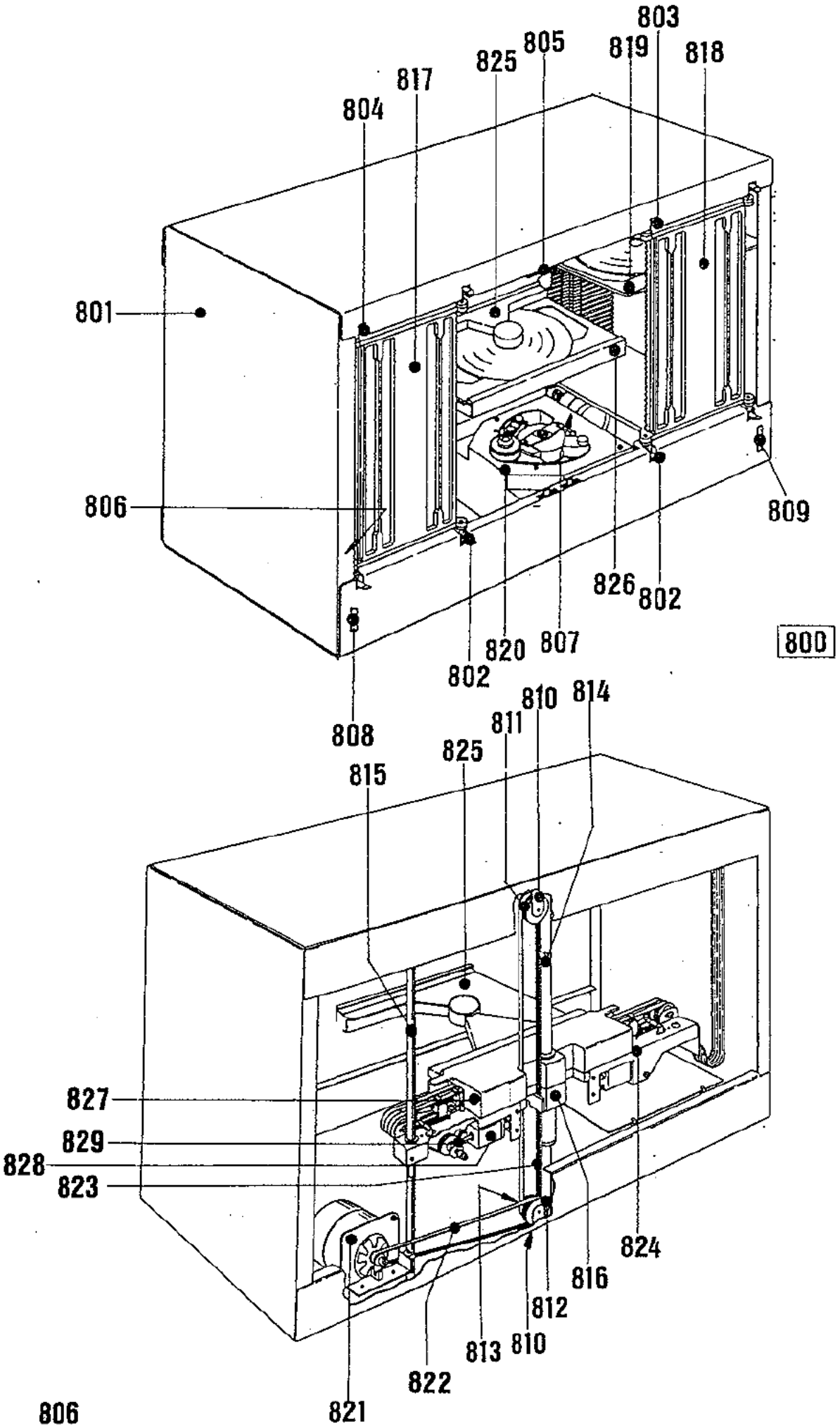
803
805
819
818
825
817
804
801
806
809
826
802
820
807
802
808
800
810
814
811
825
815
827
829
828
823
824
816
812
813
810
822
821
806

SPARE PARTS LIST

POS.	PART-№	DESCRIPTION	DATA	QTY
800	173 470	CD-CHANGER 100, STANDARD	without design parts	1
801	173 487	CABINET	magazines	1
802	173 476	CLOSING LEDGE	back cover	2
803	173 547	CLOSING LEDGE, RIGHT		1
804	173 546	CLOSING LEDGE, LEFT		1
805	173 485	CONTROL KNOB		2
806	206 655	CONNECTION AXLE		2
807	173 504	SUPPORT WASHER		2
808	173 542	FLAT SPRING, LEFT		1
809	173 541	FLAT SPRING, RIGHT		1
810	173 538	SCREW SLEEVE, ASSY		2
811	173 522	STEP WHEEL, MOUNTED		1
812	173 521	WASHER 48		1
813	173 526	BOARD WASHER		1
814	173 558	AXLE		1
815	173 559	GUIDE AXLE		1
816	173 614	BELT LOCK		1
DESIGN-PARTS for GALAXY				
	173 471	BACK COVER		1
	209 795	BACK COVER - LABEL		1
	173 554	VIEW GLASS		1
	173 635	LIGHTING, ASSY		1
817	173 491	MAGAZINE LEFT, MOUNTED	without CASSETTE	1
	209 737	NUMBER STRIP 01-50		2
818	173 499	MAGAZINE RIGHT, MOUNTED	without CASSETTE	1
	209 779	NUMBER STRIP 51-100		2
819	173 495	CASSETTE CD 120		100
	173 496	CASSETTE CD 80		
820	173 551	PLAY BACK UNIT, ASSY	with CD-PLAYER	1
821	173 518	STEP MOTOR, ASSY		1
822	206 644	BELT	MXT 195	1
823	206 643	BELT	MXT	1
824	173 607	LIFT, ASSY		1
825	173 597	LIFT-UPPER PART, ASSY		1
	206 629	RUBBER RING		1
	209 776	LABEL		1
	173 611	DECOR COVER		1
826	173 569	LIFT-LOWER SIDE, MOUNTED		1
827	173 581	LIFT AXLE		1
828	173 606	MOTOR, ASSY		2
829	173 630	GEAR, MOUNTED		2
	173 552	CB - CASSETCONTROL, ASSY		1
	173 563	CB - STEPPER, ASSY		1
	173 507	CB - DECODER BOARD, ASSY		1
	173 665	CB - PICK UP DRIVER, ASSY		1
	173 510	CB - LIFT ADAPTER, ASSY		1
	173 557	CB - MOTORCONTROL, ASSY		2
	173 508	CB - CHANGER ADAPTER, ASSY		1

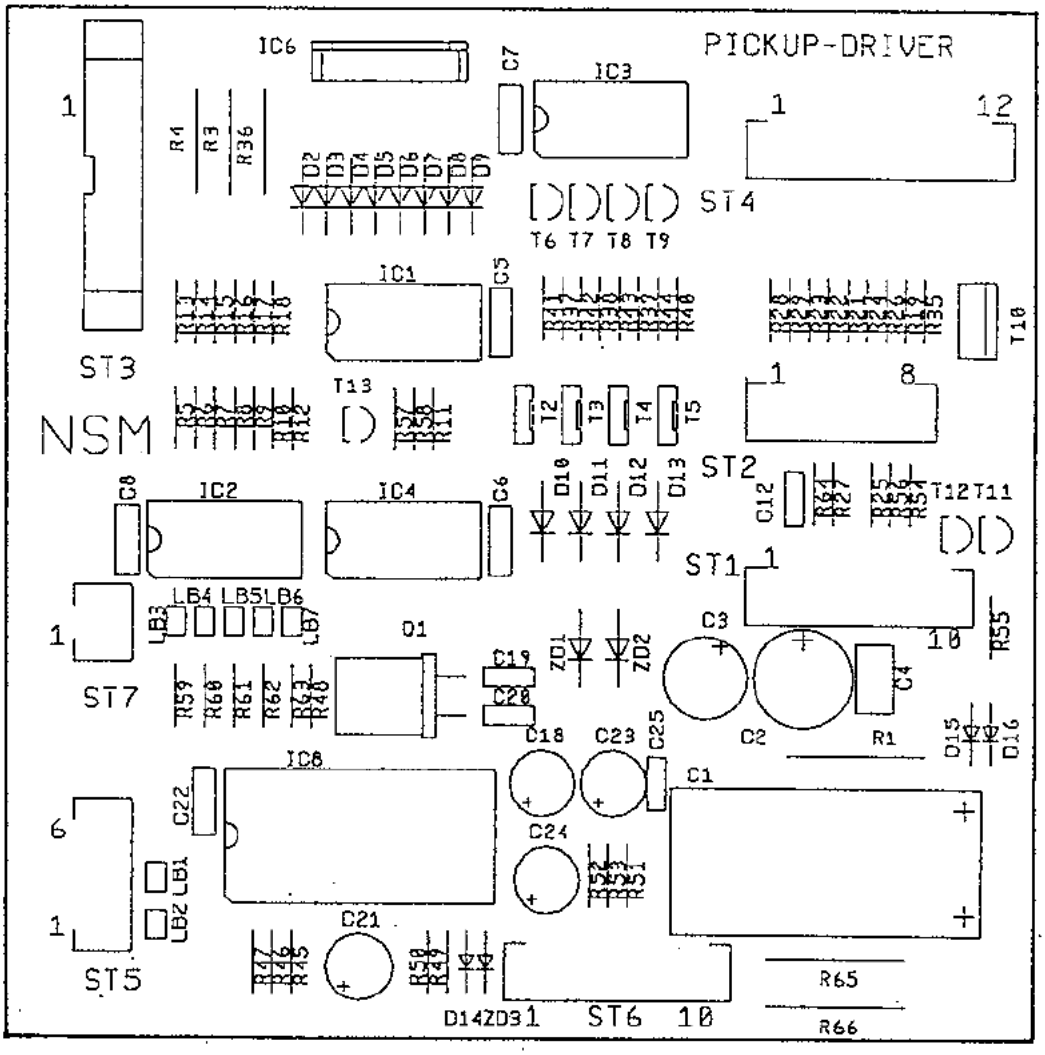
PICKUP-DRIVER
IC6
C7
IC3
ST4
T6 T7 T8 T9
ST3
IC1
C5
T10
T13
NSM
T2
T3
T4
T5
ST2
C8
IC2
IC4
C6
D10
D11
D12
D13
C12
T12
T11
ST1
LB4 LB5 LB6
LB3
LB7
ST7
D1
C19
C20
ZD1
ZD2
C3
C4
R55
R59
R60
R61
R62
R63
R40
C18
C23
C25
C2
R1
D15
D16
IC8
C22
C1
C24
LB1
LB2
ST5
C21
R47
R46
R45
R50
R49
D14
ZD3
ST6
R65
R66

SPARE PARTS LIST

POS.	PART-№	DESCRIPTION	DATA	QTY
	173 665	CIRCUIT BOARD-PICK UP DRIVER, ASSY		1
ST 07	225 650	PIN PANEL	2 PRONGS	1
ST 05	225 850	PIN PANEL	5 PRONGS	1
ST 02	225 653	PIN PANEL	8 PRONGS	1
ST 01	225 654	PIN PANEL	10 PRONGS	1
ST 04	225 655	PIN PANEL	12 PRONGS	1
ST 03	225 894	PLUG	14 PRONGS	1
Q 1	221 535	OSCILLATOR QUARTZ	4 MHZ	1
	222 447	IC-SOCKET	28 PRONGS	1
IC 8	231 409	IC-MICROCOMPUTER T 018	MAB 8441	1
IC 6	231 303	IC-LINEAR	L 298	1
IC 3, 4	221 771	IC-CMOS	HEF 4094 B	2
IC 1, 2	221 763	IC-CMOS	HEF 4021 B	2
D 14-16	221 114	SI-DIODE	1 N 4148	3
D 2-13	221 822	SI-DIODE	BA 157	12
ZD 1, 2	231 326	ZENER DIODE	ZY 24	
T 11	221 283	SI-TRANSISTOR	BC 212 B	1
T 6-9, 12, 13	221 757	SI-TRANSISTOR	BC 547 B	6
T 2-5	221 777	SI-TRANSISTOR	BD 679	4
T 10	231 150	SI-TRANSISTOR	TIP 130	1
C 19, 20	220 266	CER.-CAPACITOR	27 pF	2
C 12	220 342	CER.-CAPACITOR	100 pF	1
C 5-8, 22	220 334	MKT-CAPACITOR	0,1 µF 63 V	5
C 4	220 332	MKT-CAPACITOR	0,33 µF 63 V	1
C 21	220 249	LYTIC	1 µF 63 V	1
C 18	220 389	LYTIC	47 µF 10 V	1
C 3	220 160	LYTIC	100 µF 10 V	1
C 2	220 391	LYTIC	220 µF 25 V	1
C 1	220 165	LYTIC	470 µF 40 V	1
R 64	221 606	RESISTOR	47 OHM 1/4 W	1
R 25, 54	221 600	RESISTOR	100 OHM 1/4 W	2
R 35	221 632	RESISTOR	160 OHM 1/4 W	1
R 37-40	221 614	RESISTOR	330 OHM 1/4 W	4
R 56	221 099	RESISTOR	470 OHM 1/4 W	1
R 45, 49	221 029	RESISTOR	1 KOHM 1/4 W	2
R 27-29	221 033	RESISTOR	3,3 KOHM 1/4 W	3
R 46, 47	221 034	RESISTOR	4,7 KOHM 1/4 W	2
R 26,41-44,58	221 035	RESISTOR	10 KOHM 1/4 W	6
R 5-12	221 603	RESISTOR	12 KOHM 1/4 W	8
R 13-19, 55	221 036	RESISTOR	15 KOHM 1/4 W	8
R21-23,57,59-63	221 604	RESISTOR	22 KOHM 1/4 W	9
R 24	221 048	RESISTOR	100 KOHM 1/4 W	1
R 48	221 009	RESISTOR	1 MOHM 1/4 W	1
R 3	221 392	RESISTOR	390 OHM 1/2 W	1
R 1, 36, 65	221 692	WIRE WOUND RESISTOR	1 OHM 1 W	3
R 66	231 418	WIRE WOUND RESISTOR	2,7 OHM 1/4 W	1

SPARE PARTS LIST

POS.	PART-№	DESCRIPTION	DATA	QTY
	173 508	CIRCUIT BOARD - CHANGER ADAPTER, ASSY		1
ST 3	225 418	PIN PLUG	4 PRONGS	1
ST 2	225 412	PIN PLUG	4 PRONGS 90°	1
ST 1	225 651	PIN PANEL	4 PRONGS	1
ST 9	225 652	PIN PANEL	6 PRONGS	1
ST 10	225 662	PIN PANEL	6 PRONGS 90°	1
ST 7, 11	225 653	PIN PANEL	8 PRONGS	2
ST 6	225 663	PIN PANEL	8 PRONGS 90°	1
ST 5	225 654	PIN PANEL	10 PRONGS	1
ST 4	225 664	PIN PANEL	10 PRONGS 90°	1
ST 8	225 655	PIN PANEL	12 PRONGS	1

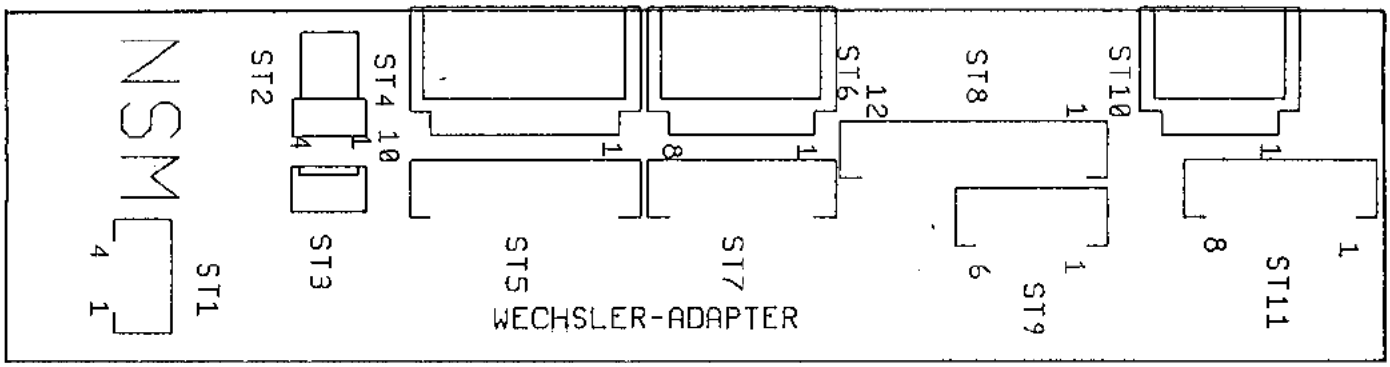

SPARE PARTS LIST

POS.	PART-№	DESCRIPTION	DATA	QTY
	173 510	CIRCUIT BOARD LIFT-ADAPTER, ASSY		1
ST 2	225 892	PLUG	14 PRONGS	1
ST 1	222 445	IC-SOCKET	16 PRONGS	1
OPEND	231 322	OPTO-COUPLER	LTH-301	1

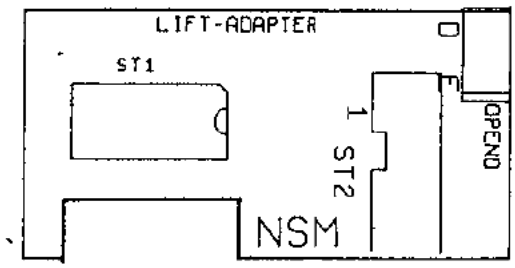

SPARE PARTS LIST

POS.	PART-№	DESCRIPTION	DATA	QTY
	173 563	CIRC. BOARD-STEPPER, ASSY		1
	231 322	OPTO-COUPLER	LTH-301	1
	112 464	CABLE HARNESS	4-PRONGS	1
	173 557	CIRC. BOARD-MOTORCONTROL, ASSY		1
	231 322	OPTO-COUPLER	LTH-301	1

SPARE PARTS LIST

POS.	PART-№	DESCRIPTION	DATA	QTY
	173 636	CABLE HARNESS: LIFT		1
	173 639	CABLE HARNESS: PICK UP-CABLE I		1
	173 641	CABLE HARNESS: PICK UP-CABLE II		1
	173 644	CABLE HARNESS: TRAILING CABLE.		1
	151 645	CABLE HARNESS: DECODER CABLE I		1
	173 646	CABLE HARNESS: DECODER CABLE II		1
	173 647	CABLE HARNESS: DRIVER CABLE I		1
	173 648	CABLE HARNESS: DRIVER CABLE III		1
	173 649	CABLE HARNESS: DRIVER CABLE III		1
	173 740	CABLE HARNESS: NF-CABLE		1

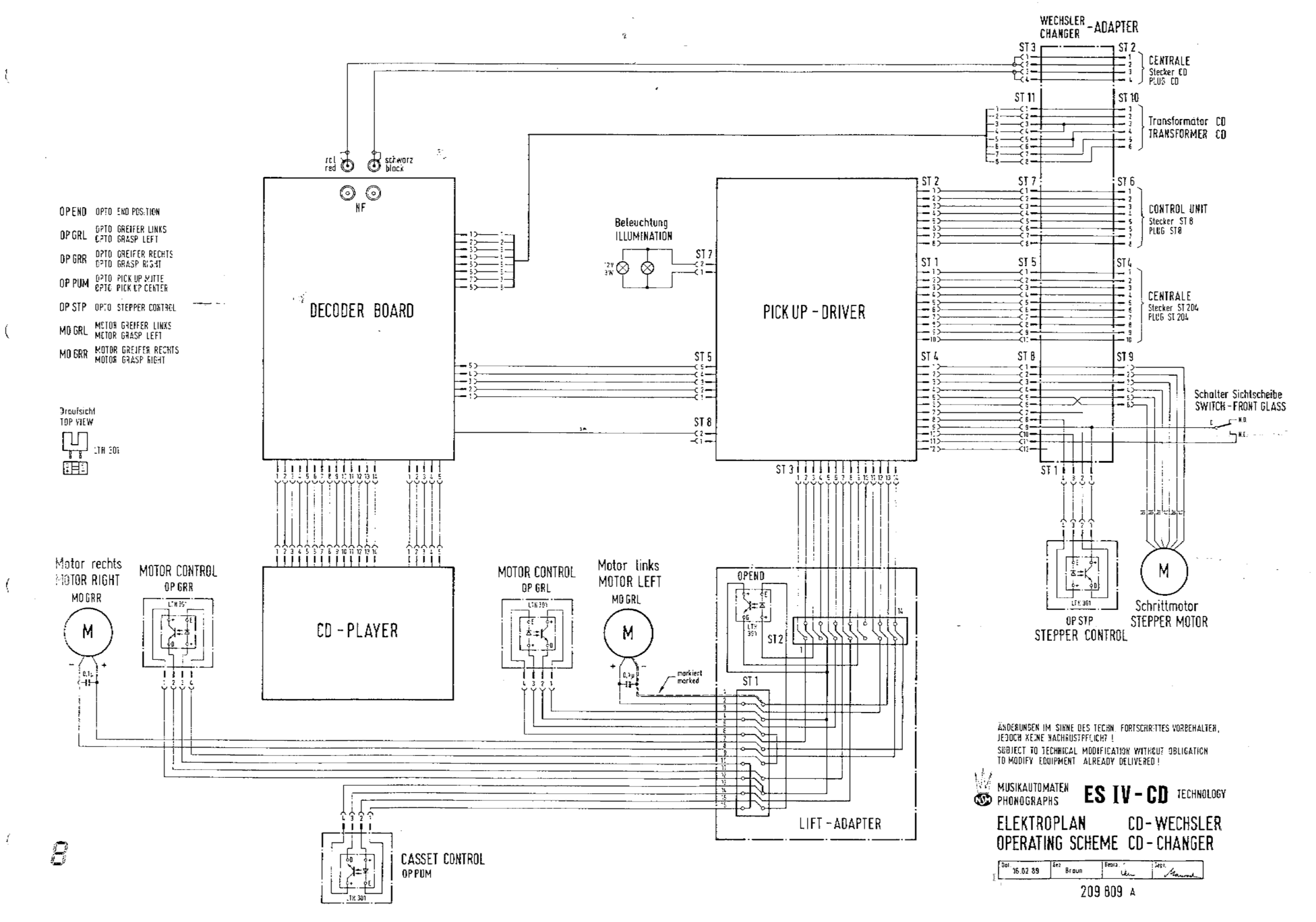
WECHSLER CHANGER - ADAPTER
ST 3
ST 2
CENTRALE
Stecker CD
PLUG CD
ST 11
ST 10
Transformator CD
TRANSFORMER CD
rot
red
schwarz
black
HF
OPEND OPTO END POSITION
OP GRL OPTO GREIFER LINKS OPTO GRASP LEFT
OP GRR OPTO GREIFER RECHTS OPTO GRASP RIGHT
OP PUM OPTO PICK UP MITTE OPTO PICK UP CENTER
OP STP OPTO STEPPER CONTROL
MO GRL MOTOR GREIFER LINKS MOTOR GRASP LEFT
MO GRR MOTOR GREIFER RECHTS MOTOR GRASP RIGHT
Draufsicht
TOP VIEW
LTH 301
DECODER BOARD
Beleuchtung
ILLUMINATION
12V
3W
ST 7
PICK UP - DRIVER
ST 2
ST 7
ST 6
CONTROL UNIT
Stecker ST 8
PLUG ST8
ST 1
ST 5
ST 4
CENTRALE
Stecker ST 204
PLUG ST 204
ST 5
ST 4
ST 8
ST 9
Schalter Sichtscheibe
SWITCH - FRONT GLASS
N.O.
N.C.
ST 8
ST 3
ST 1
Motor rechts
MOTOR RIGHT
MO GRR
M
MOTOR CONTROL
OP GRR
CD - PLAYER
MOTOR CONTROL
OP GRL
Motor links
MOTOR LEFT
MO GRL
M
markiert
marked
OPEND
ST 2
ST 1
LIFT - ADAPTER
OP STP
STEPPER CONTROL
M
Schrittmotor
STEPPER MOTOR
CASSET CONTROL
OP PUM
ÄNDERUNGEN IM SINNE DES TECHN. FORTSCHRITTES VORBEHALTEN, JEDOCH KEINE NACHRÜSTPFLICHT !
SUBJECT TO TECHNICAL MODIFICATION WITHOUT OBLIGATION TO MODIFY EQUIPMENT ALREADY DELIVERED !
MUSIKAUTOMATEN
PHONOGRAPHS
ES IV - CD TECHNOLOGY
ELEKTROPLAN CD - WECHSLER
OPERATING SCHEME CD - CHANGER
Dat. 16.02.89
Bez. Braun
Bearb.
Sept.
209 809 A

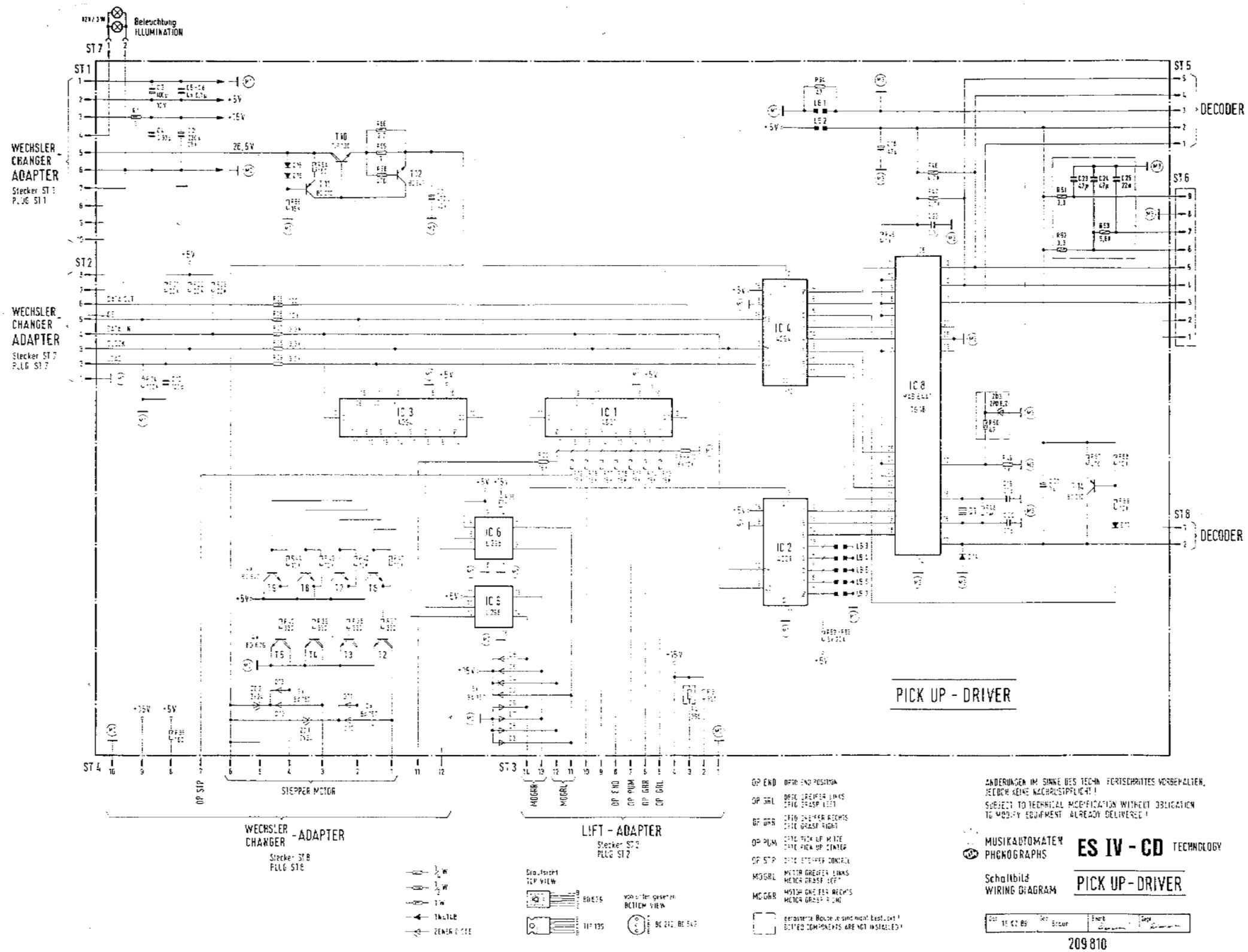
Beleuchtung
ILLUMINATION
ST 7
ST 1
WECHSLER CHANGER ADAPTER
Stecker ST 1
PLUG ST 1
ST 2
WECHSLER CHANGER ADAPTER
Stecker ST 7
PLUG ST 7
ST 5
DECODER
ST 6
ST 8
DECODER
ST 4
ST 3
STEPPER MOTOR
WECHSLER CHANGER -ADAPTER
Stecker ST 8
PLUG ST 8
LIFT - ADAPTER
Stecker ST 2
PLUG ST 2
PICK UP - DRIVER
ANDERUNGEN IM SINNE DES TECHN. FORTSCHRITTES VORBEHALTEN, JEDOCH KEINE NACHRÜSTPFLICHT!
SUBJECT TO TECHNICAL MODIFICATION WITHOUT OBLIGATION TO MODIFY EQUIPMENT ALREADY DELIVERED!
MUSIKAUTOMATEN PHONOGRAPHS
ES IV - CD TECHNOLOGY
Schaltbild
WIRING DIAGRAM
PICK UP - DRIVER
209 810

UNIT DESCRIPTION

TITLE DRUM

FOR NSM-PHONOGRAPHS

ES IV-CD TECHNOLOGY

NSM
APPARATEBAU
GmbH & Co. KG
Postfach 1564 · 1565 6530 Bingen 1 Germany · Allemagne
Saarlandstraße 240 · Telefon (06721) 407-0 · Telex 042216

PART-№
209826

INDEX

1. FUNCTION
1.1. Start to Turn

2. ADJUSTMENTS

Spare parts list

Schematics - flip-chart control

1. FUNCTION

The internal power supply is conducted via ST 01, Pins 2-4 to the circuit board.
Voltage regulator VR 1 supplies a constant voltage of + 10 V.
The drive motor is switched on by T 2 and stopped by T 1 after reaching a title display holder in position. Opto coupler 301 takes over control.
TAS 1 is a service flip button. At ST 4, Pins 1 and 3 an additional service flip button can be connected.

1.1. Start to Turn

By pressing the PUSH TO FLIP button - on the outside of hood -or TAS 1 - on inside of flip chart control PCB - or an pulse at ST 601, Pin 3 from the control unit, Input 7 of comperator II is switched with a reference voltage of 5 + V. This way Output 1 switches transistor T 2 on via 03-ZD1-R11. The motor starts and turns the flip chart as well as the opto counter disc.
As long as the coupler receives light, the switch-on condition of comperator IV is kept via R 15. After leaving the slot in the opto counter comperator IV turns off the overriding of comperators III and II. Now comperator I takes care of turning on the motor until the next slot is reached in the turning counter disc. Thereby T 2 is turned off and T 1 turned on to pulse-brake the motor. To assure the on- and off-switching of the comperators a reversing hysteresis is created by R 9.
A continuous run, when pressing the key down, is avoided via C 1, R 2, R 3.
Now and then the flip chart is turned forward by the control unit during stand-by operation. A pulse is then sent to comperator II via ST 01, Pin 3.

2. ADJUSTMENTS

After reaching the slot in the opto counter disc the drive motor stops, the title holders are in read position. The upper title holders are touching slightly against the support bracket.
If needed, the flip time can be changed by adjusting the height of the support bracket.

The opto counter disc may not be hindered by the coupler; an adjustment is possible after loosening the coupler PCB.

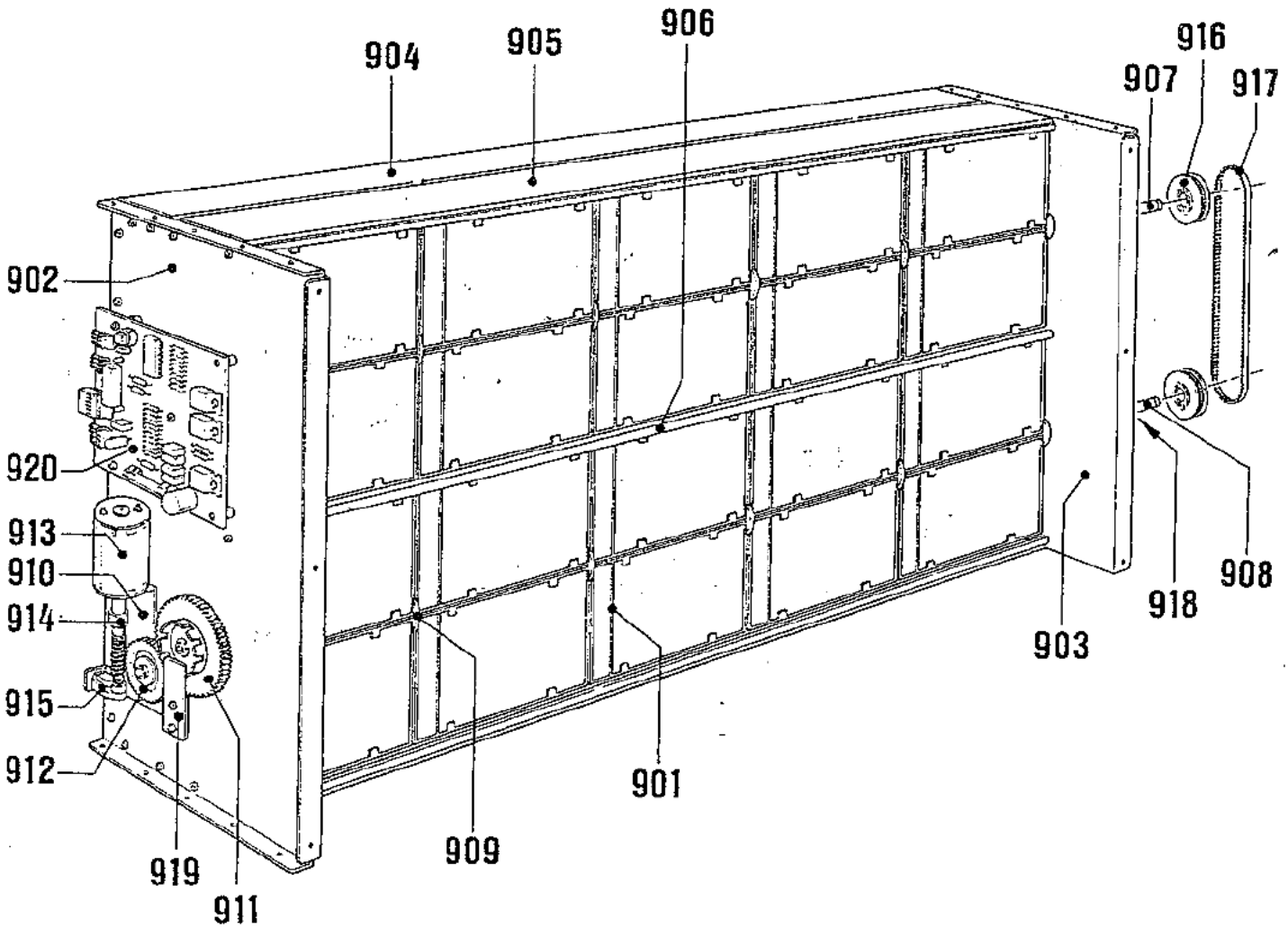
904
905
906
916
907
917
902
920
913
910
914
915
912
919
911
909
901
903
918
908

904

SPARE PARTS LIST

POS.	PART-No	DESCRIPTION	DATA	QTY
900	173 416	TITLE DRUM, ASSY		1
901	173 800 to 173 899	Corresponds to No. 00-99 on title holder Example: Order No. 173 827 = printed title holder 27		100
902	173 425	SIDE PLATE, LEFT		1
903	173 426	SIDE PLATE, RIGHT		1
904	173 427	REAR WALL		1
905	173 433	STOPPER, UPPER		1
906	173 434	SHAFT		1
907	173 428	TUBE, UPPER		1
908	173 429	TUBE, LOWER		1
909	173 431	HOLE DISC		12
910	173 437	HOLDER, STAMPED		1
911	173 430	TOOTHED WHEEL	z = 70	1
912	173 432	WORM WHEEL		1
913	170 893	MOTOR, ASSY		1
914	170 901	WORM, ASSY		1
915	151 910	ABUTMENT		1
	206 077	SPHERICAL CAP		1
	212 323	LOSS		1
916	173 453	BELT WHEEL (Mini-Pitch)	z = 46	1
	173 454	WASHER		1
917	206 648	BELT	140 MXL 1/8"	1
918	206 106	SLIDE BEARING	STAR NYLINER	4
	173 643	WASHER		4
919	173 448	CIRCUIT BOARD-COPPLER PLATE, ASSY		1
	173 468	CABLE HARNESS: COPPLER--MOTOR		1
	209 791	COLOUR BAR - YELLOW		1
	209 792	COLOUR BAR - RED		1
	209 793	COLOUR BAR - BLUE		1
	209 794	COLOUR BAR - GREEN		1
920	173 449	CIRCUIT BOARD - PROGRAM LID		1

SPARE PARTS LIST

POS.	PART-№	DESCRIPTION	DATA	QTY
	173 449	CIRC. BOARD-PROGRAM LID CONTROL, ASSY		1
	225 411	PIN PLUG red	3 PRONGS 90°	2
	225 412	PIN PLUG red	4 PRONGS 90°	1
	225 408	PIN PLUG red	6 PRONGS 90°	1
SI 1	225 689	FUSE HOLDER		2
	225 031	FUSE	T 0,63 A 50 Hz	1
		FUSE	USA	1
S 1	222 404	CONTACT BUTTON red	D 6	1
VR 1	221 572	IC-VOLTAGE	5 V 1 A	1
IC 1	221 813	IC-LINEAR	LM 339	1
ZD 1, 2	231 410	ZENER DIODE	ZPD 6,8	2
D 1-4	221 114	SI-DIODE	1 N 4148	4
D 5-7	221 115	SI-DIODE	1 N 4004	3
T 1	231 151	DARLINGTON TRANSISTOR	TIP 135	1
T 2	231 150	DARLINGTON TRANSISTOR	TIP 130	1
C 1	220 333	MTK-CAPACITOR	0,22 µF 63 V	1
C 3-6, 8	220 332	MTK-CAPACITOR	0,33 µF 63 V	5
C 2	220 250	LYTIC	100 µF 25 V	1
C 7	220 391	LYTIC	220 µF 25 V	1
R 11, 13	221 600	RESISTOR	100 OHM 1/4 W	2
R 1, 17	221 099	RESISTOR	470 OHM 1/4 W	2
R 16	221 100	RESISTOR	680 OHM 1/4 W	1
R 8	221 031	RESISTOR	2,2 KOHM 1/4 W	1
R 3, 6	221 034	RESISTOR	4,7 KOHM 1/4 W	2
R2,4,7,10,19,20	221 035	RESISTOR	10 KOHM 1/4 W	6
R 5, 15	221 038	RESISTOR	47 KOHM 1/4 W	2
R 9	221 048	RESISTOR	100 KOHM 1/4 W	1
R 18	231 094	WIRE WOUND RESISTOR	3,9 OHM 4 W	1

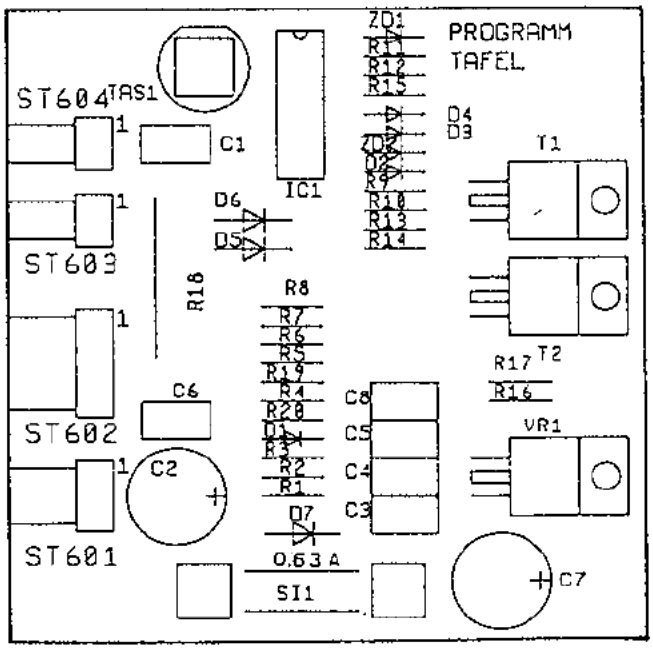

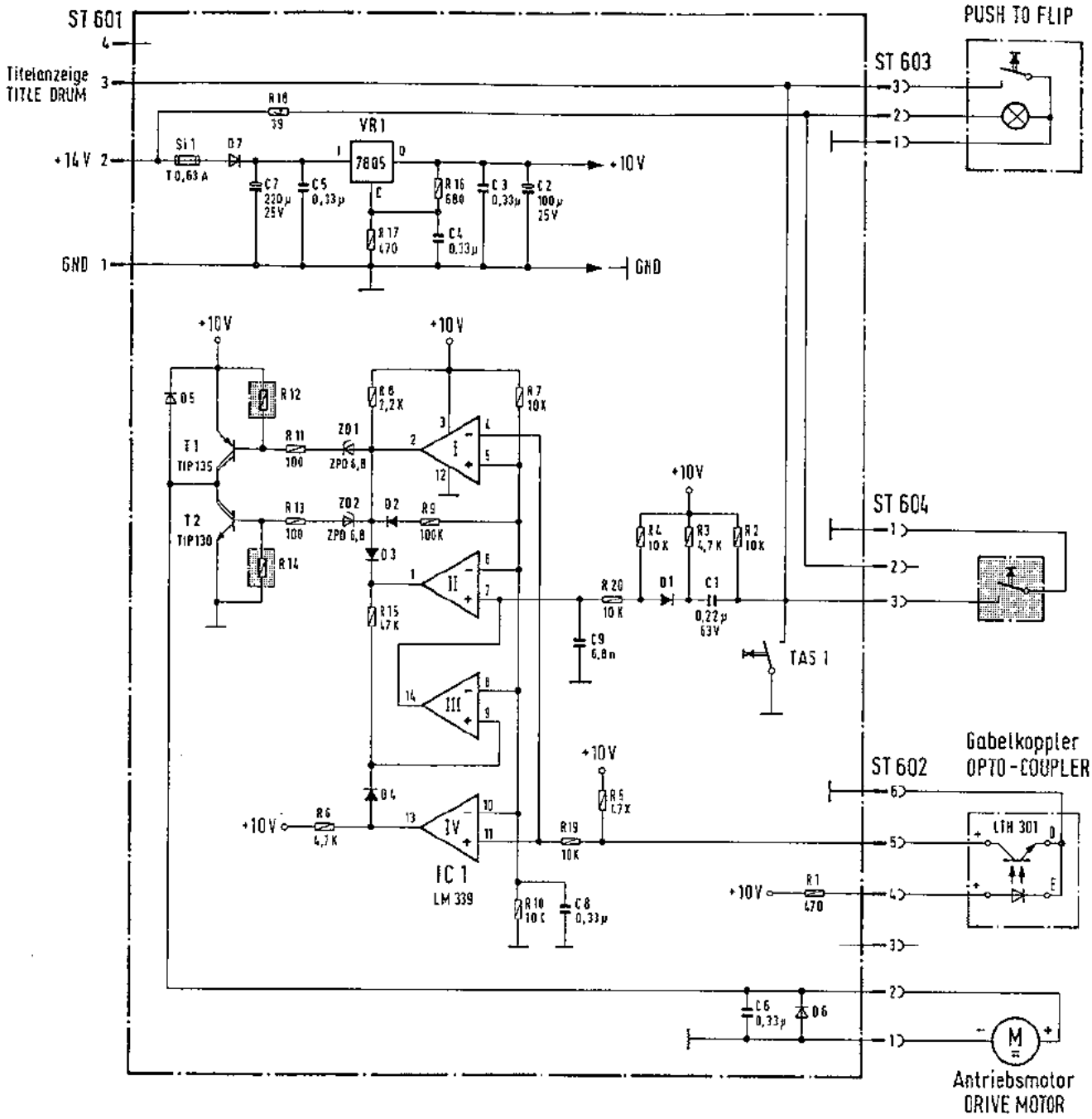

1N 4004

1N 4148

½W

4W

Spannungsregler
VOLTAGE REGULATOR

Draufsicht
TOP VIEW

VR 1

TIP 130, TIP 135

gerasterte Bauteile sind nicht eingebaut !
DOTTED COMPONENTS ARE NOT INSTALLED !

Sicherungen nur durch solche mit gleichen Werten ersetzen.
REPLACE FUSES ONLY BY THOSE OF THE SAME VALUE.

ÄNDERUNGEN IM SINNE DES TECHN. FORTSCHRITTES VORBEHALTEN, JEDOCH KEINE NACHRÜSTPFLICHT !

SUBJECT TO TECHNICAL MODIFICATION WITHOUT OBLIGATION TO MODIFY EQUIPMENT ALREADY DELIVERED !

MUSIKAUTOMATEN
PHONOGRAPHS

ES IV-CD TECHNOLOGY

Schaltbild
WIRING DIAGRAM

Programmtafel
PROGRAM LID

Dat.	Gez.	Bearb.	Gepr.
08.03.89	Braun		

UNIT DESCRIPTION

ELECTR. COIN-AND BILL ACCEPTOR

FOR NSM-PHONOGRAPHS

ES IV-CD TECHNOLOGY

10

NSM
APPARATEBAU
GmbH & Co. KG
Postfach 1564 · 1565 · 6530 Bingen 1 · Germany · Allemagne
Saarlandstraße 240 · Telefon (06721) 407-0 · Telex 04 2216

PART-Nº
209827 A

INDEX

1. MECHANICAL COIN CHUTE

2. BILL VALIDATION - DOLLAR BILL ACCEPTOR

3. MARS ELECTRONIC COIN VALIDATOR
3.1. Monetary Value Settings
3.2. Price Tables
3.3. Other Settings/Information

1. MECHANICAL COIN CHUTE

See also the circuit in the wiring diagram in the appendix of the "Technical Information."

The coins that come out of the "good" channels of the coin acceptor run through different optic barriers. The optic barriers are in the coin chute under the coin acceptor.

Two photo transistors, T III and T I as well as T IV and T II are illuminated by one IR diode each (LED I and LED II).
As long as a light barrier is not interrupted by a coin, all photo transistors, T I to T IV, are switched to logically "0." So all output lines

1 = T IV
2 = T III
3 = T I
4 = T II are at logically "0," i.e. their voltage level is 1,0 V.

If a coin passes through an optic beam, the respective photo transistor is darkened for that time. The output becomes log. "1" via the pull-up resistors in the control unit, i.e. their level is 10 V.
Since T 1 is also darkened, when T III is effected by a coin (T 1 is behind T III, both are illuminated by the same light diode), the output from T I over T V is kept at "0." This occurs via resistors R 72, R 70; they bring transistor T V in a satiated state when T III is open.

The same goes for T IV; it is kept at "0" by T VI when a coin falls through T II. The control for T VI occurs via R 73, R 69.

The addition button is switched in sequence to T IV so that Line 1 becomes log. "1" at service credit.

R 67 limits the current of the luminous diodes LED I and LED II.

The output signals of the four photo transistors are evaluated in the control unit whereby line

1 = P 54
2 = P 53
3 = P 52
4 = P 51 is assigned to the monetary value setting in the service program and is to be programmed according to the coin value; see "Statistics and Service Programs," Section 14.

2. BILL VALIDATION - DOLLAR BILL ACCEPTOR

See also the circuit in the wiring diagram in the appendix of the "Technical Information."

The bill validator, after the bill has passed through and been accepted, sends as many pulses to the control unit as correspond to the value of the bill.
The output of the bill validator is connected to the control unit via ST 9, Pins 1 and 2. 1 pulse is sent to the control unit with 1 dollar and 5 pulses with 5 dollars.
The input of the bill validator is assigned to program step P 55 and is to be programmed accordingly; see "Statistics and Service Programs," Section 14.

3. MARS ELECTRONIC COIN VALIDATOR

4 or 5 different coins can be checked depending on the type. The three sensors in the validator register each separately the width, material composition and pressure of each deposited coin. If a deposited coin passes the sensors, the prepared data are passed on to a register and compared with the contents of a memory (PROM). If all validation criteria are identical with a data set of the PROM, an internal "valid" signal is produced. Depending on the coin value it goes as output signal A1 to A5 to the plug of the PCB adapter (depending on type of validator, 15 or 13 poled). From there the signal goes via the 6-pole plug to control unit CD for processing.

3.1. Monetary Value Settings

The information in the "Operating Instructions" and the statistics and service program about monetary value settings refer to coin mechanisms with mechanical coin acceptors.
If a electronic validator has been installed, the monetary value settings in the individual program steps are assigned to corresponding output signals: P51 to signal (A1) or (A5), P52 to (A3), P53 to (A4), P54 to (A2).
Notice: When inserting a coin during program steps 50-55, the program step (channel P51 to P55) assigned to the coin is automatically displayed in Display 1.
The monetary values are programmed in monetary value units: "001" ≙ 0,10 DM, "010" ≙ 1,- DM, "020 ≙ 2,- DM, "050" ≙ 5,- DM. No-used channels are programmed with "000".

3.2. Price Tables

Set the number of credit per monetary value in program steps P41 to P45 as described in the "Statistics" and Service Program, 1.3.2. Price Tables".

3.3. Other Settings/Information

When exchanging the control unit the programming has to be done in the new unit also.
Attention! When checking the monetary value settings in P54, the cabinet switch has to be pushed in; otherwise only one credit will be displayed instead of set coin value.
Notice: Non-used channels can be blocked. For this purpose the bridge of the corresponding channel (A1-A5 on the PCB) has to be disconnected or conductor A 5 is not connected.

When exchanging please observe the following:

The validators of series B1 may have different mounting studs; compare the following text to Fig. 2.

- The lower stud can be set on Pos. 1 or Pos. 2 as needed. To loosen the stud position unscrew the cover (3) and pull down, (4) unlatch the stud, pull out and push it in at the desired position until it locks in.
- If former validator was fastened with 2 screws, then exchange validator has to be fastened with plug-in studs as follows:
  Drill a hole below into the plate with a diameter of 5,1 mm. Stick the stud positioned to the validator through the hole and secure it with clip 4,5 (712 011). Then screw on by upper fastening screw.

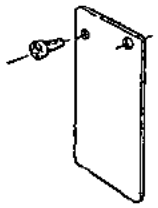

Fig. 1

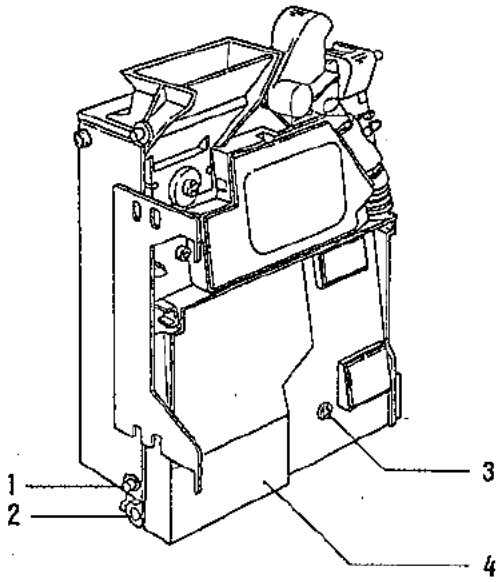

Fig. 2

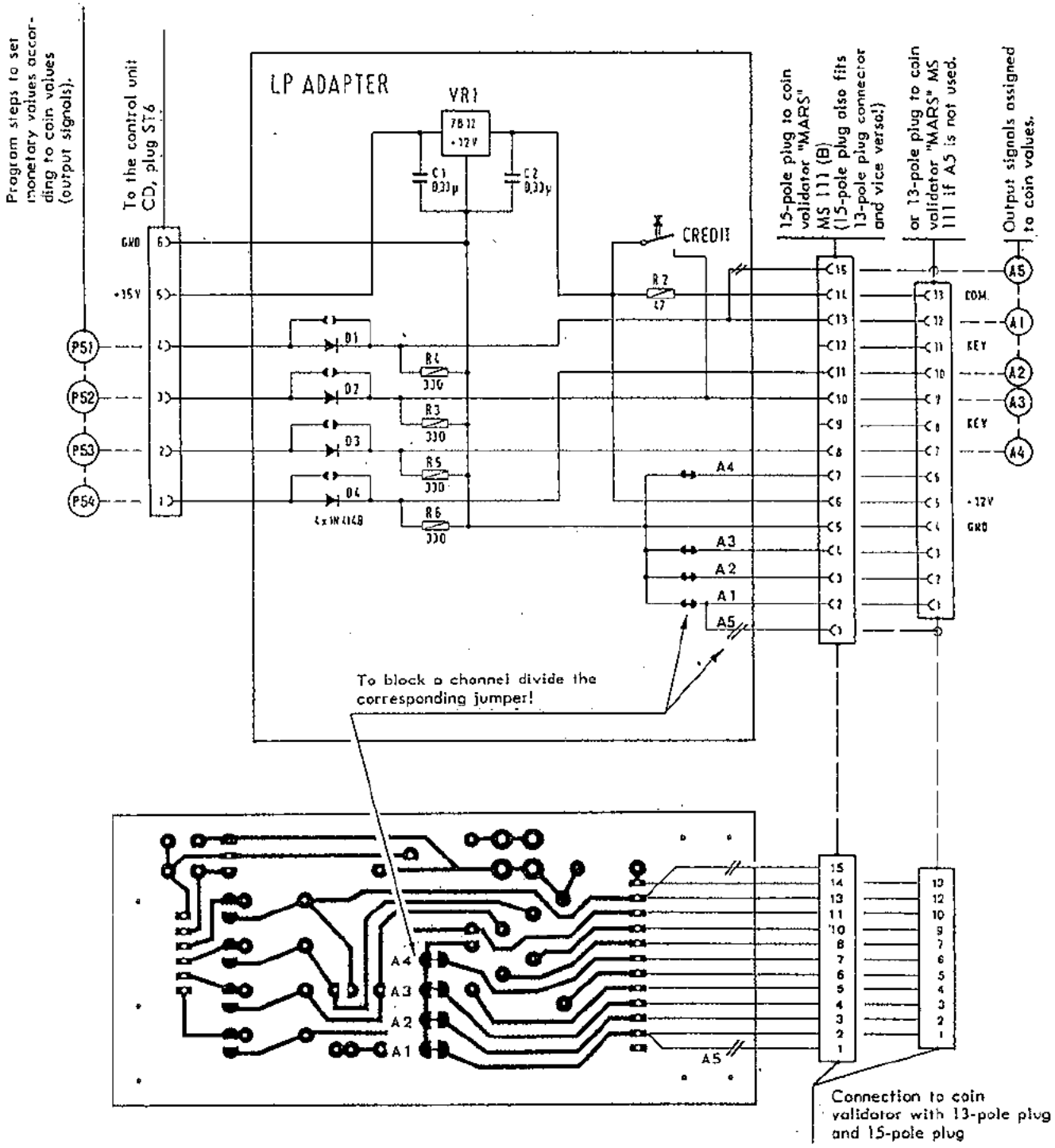

MONETARY VALUE SETTINGS SEE BACK PAGE

Monetary Value Settings

Programming of monetary values and value settings according to the individual coins (see 3.1.).

Currency	Monetary Value Units ≙ coin Value				Disconnect Jumpers	Coin Validator - Type
	P51 (A1/A5)	P52 (A3)	P53 (A4)	P54 (A2)		
Germany	050 ≙ 5,- DM	010 ≙ 1,- DM	000 ≙ 00	020 ≙ 2,- DM	A4/A5	GDE 55 L00C / B1
Great Britain	100 ≙ 1 £	020 ≙ 20p	010 ≙ 10p	050 ≙ 50p		GDB 31 L00C / GGB81 ...
USA	100 ≙ 1 $	025 ≙ 25c	000 ≙ 00	050 ≙ 50c	A4	GUS 20 L00C
Australia	000 ≙ 00	100 ≙ 1 $	020 ≙ 20c	200 ≙ 2 $		
France	100 ≙ 10 F	020 ≙ 2 F	010 ≙ 1 F	050 ≙ 5 F		
Denmark	000 ≙ 00	050 ≙ 5 dkr	010 ≙ 1 dkr	100 ≙ 10 dkr		by 3-channel GDK xx L 00 C
	100 ≙ 10 dkr	010 ≙ 1 dkr	000 ≙ 0,25 dkr	050 ≙ 5 dkr	A4	by 4-channel GDK 02 L 00 C
Finland	000 ≙ 00	050 ≙ 5 MK	010 ≙ 1 MK	000 ≙ 00		GSF 1A L00C
Austria	200 ≙ 20 S	050 ≙ 5 S	010 ≙ 1 S	100 ≙ 10 S		GAU 03 L00C
Netherl.Antillen	000	000	100 ≙ 1 NAF	000		GNA 1 AL 00G/B1
Switzerland	050 ≙ 5 Fr	010 ≙ 1 Fr	000 ≙ 1/2 Fr	020 ≙ 2 Fr	A4/A5	GCH 31 L00C/B1
Belgium	050 ≙ 50 F	000 ≙ 5 F (new)	000 ≙ 1 F	020 ≙ 20 F	A3/A4	GBE 19 L00C/B1
Netherland	025 ≙ 25 c	250 ≙ 2 1/2 hfl	500 ≙ 5 hfl	100 ≙ 1 hfl		GNL 37 L00C/B1
Italy	050 ≙ 500 L	000 (100 L)	000 (50 L)	020 ≙ 200 L	A3/A4	GIT 06 L00C

UNIT DESCRIPTION

REMOTE CONTROL

FOR NSM-PHONOGRAPHS

ES IV-CD TECHNOLOGY

NSM
APPARATEBAU
GmbH & Co. KG
Postfach 1564 · 1565 · 6530 Bingen 1 · Germany · Allemagne
Saarlandstraße 240 · Telefon (06721) 407-0 · Telex 042216

PART-№
209828A

INDEX

1. FUNCTION
1.1. Infrared remote control (wireless)
1.2. Wired remote control
1.3. Installation instructions for infrared remote control
1.4. Volume control (on rear cabinet wall)

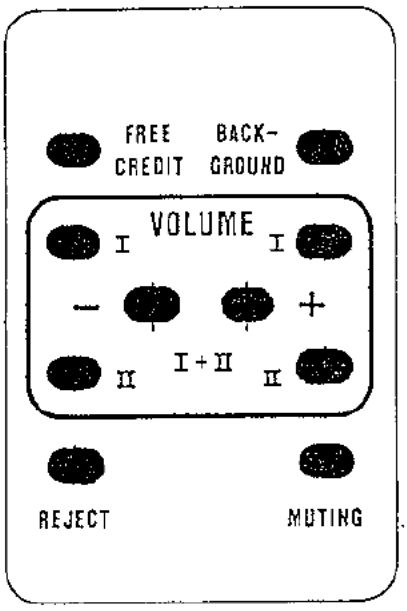

INFRARED REMOTE CONTROL, ASSY.

Part No.	171 808
with sender	217 817
Receiver	173 178
and connection cable (standard)	171 883
Connection cable (5 m)	170 459

REMOTE CONTROL with 5 m cable

Part No.	171 743

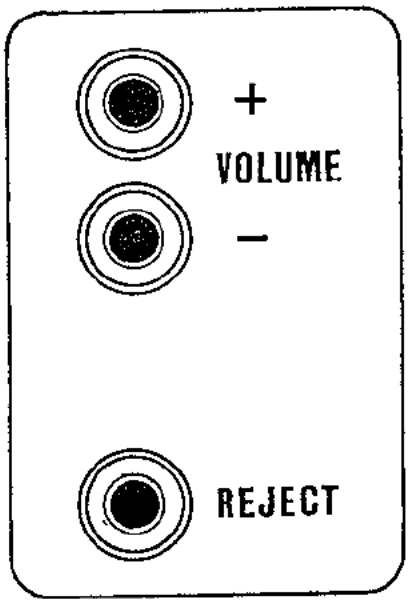

VOLUME CONRTOL (rear wall of box; although not in wallboxes or Hide-Away´s).

Part No.	170 212

1. FUNCTION

1.1. Infrared remote control (wireless)

The cable of the remote control receiver has to be put into plug ST 205 of the central unit.
Pin 1 supplies the + 15 V voltage.
Pin 2 = GND
The commands - as per chart - are fed to the computer inputs via Pins 3 through 6 by switching to ground.
The signals go to the control unit via plug ST 201.

1.2. Wired remote control

For remote controls with cable the plug has to be connected with ST 205 on the central unit (instead of infrared remote control). The corresponding channels (Pins 3 through 6) - as per chart - are connected to GND Pin 2 via the remote control diode linkage.

TASTE / KEY	AUSGANGS- OUTPUT- CODE	STECKER / PLUG ST 205 / PIN
VOLUME - I	2 / 4	5 / 3
VOLUME + I	4	3
VOLUME - II	2 / 3	5 / 4
VOLUME + II	3	4
FREE CREDIT	1 / 3	6 / 4
BACKGROUND	1 / 4	6 / 3
REJECT	2	5
MUTING	1	6
VOLUME + (I+II)	3 / 4	4 / 3
VOLUME - (I+II)	2 / 3 / 4	5 / 4 / 3

1.3. Installation Instructions for Infrared Remote Control

The receiver with standard connection cable is mounted onto the back of the cabinet or the back of the hood when a small distance is involved. The top (receiving side) of the receiver should be mounted a little underneath the upper edge of the rear cabinet.Wallboxes and Hide-Away's have to be mounted close to the machine.
If a greater distance has to be bridged or an absorbing ceiling is influencing correct functioning the receiver has to be mounted in such a way on the wall or the ceiling that direct radiating of the manual sender is possible. A connection cable (5 m), Part. Nr. 170 459, is available for this purpose.

The connection cable of the receiver is put into plug S 205 of the central unit.

SECURING MANUAL SENDER
To protect the manual sender from theft, mount the bracket with two screws onto the back of the sender (see fig.). This way the sender can be secured with a chain.

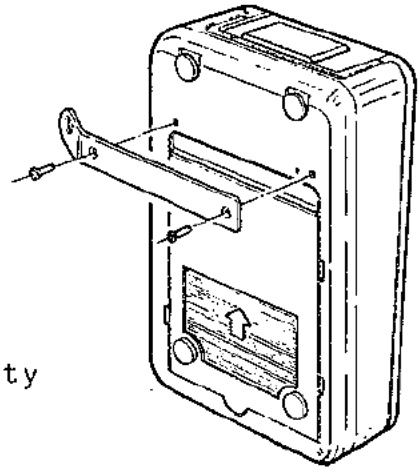

Manual sender with safety bracket and screws

1.4. Volume Control (On Rear Cabinet Wall does not apply to wallboxes and Hide-Away's.

The connection cable must be put into plug ST 206 of the central unit. When the volume keys are pressed, the computer inputs are switched to GND via the diode linkage D 213 - D 217.

TASTE / KEY	AUSGANGS- OUTPUT- CODE	STECKER / PLUG ST 204 / PIN
VOLUME + (I+II)	3 / 4	3 / 2
VOLUME - (I+II)	2 / 3 / 4	4 / 3 / 2
REJECT	2	4

UNIT DESCRIPTION

OUTPUT TRANSFORMER

FOR NSM-PHONOGRAPHS

ES IV-CD TECHNOLOGY

NSM
APPARATEBAU
GmbH & Co. KG
Postfach 1564 + 1565 6530 Bingen 1 Germany · Allemagne
Saarlandstraße 240 · Telefon (06721) 407-0 · Telex 042216

PART-№
209 829 A

OUTPUT TRANSFORMER with cable harness

Part. No. 172 431

The output transformer is connected directly to the terminals of the output amplifier. It has an input impedance of 4 ohms and transforms the input voltage down so that smaller output voltages are available at Connection Terminals 1 through 5 permitting speakers with lower impedances to be connected.
A number of loudspeakers can be connected together (in parallel) up to a total maximum power of ~130 W music power per channel; depending on how much power is taken directly from the amplifier.
The table below shows the power required for a loudspeaker with the corresponding impedance at Connection Terminals 0-1 through 0-5. Also observe the output transformer diagram and connection schematics. Further information is given in the "TECHNICAL INSTRUCTIONS" under "Loudspeaker Connection".

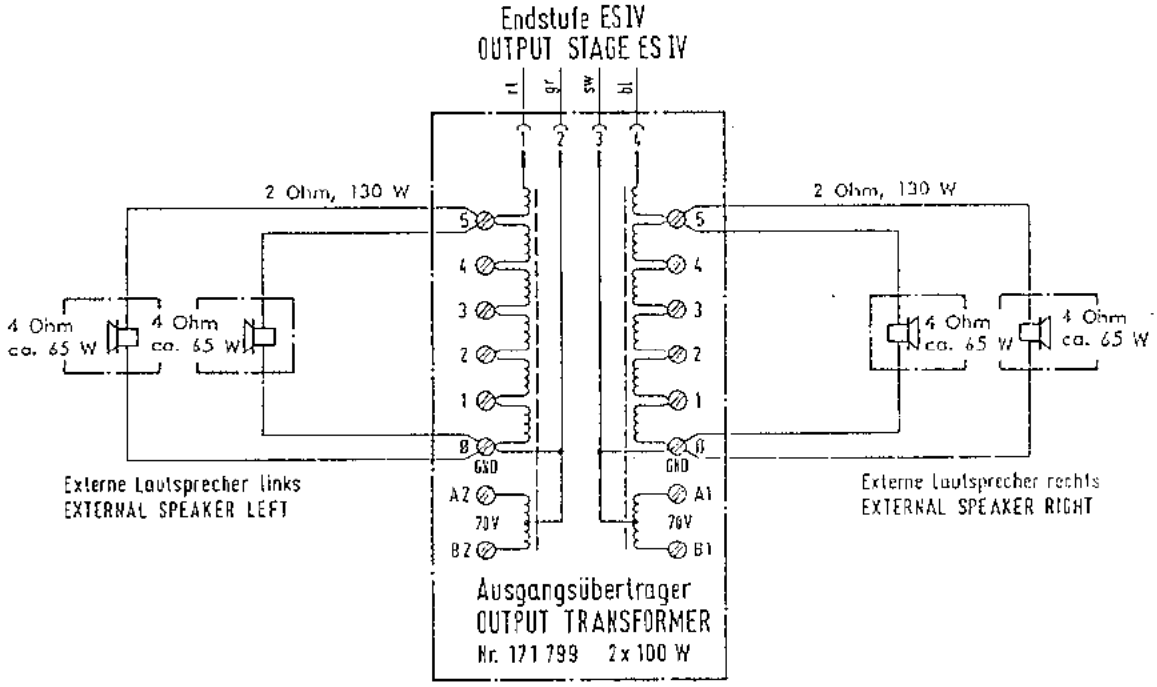

Anschlußschema für Ausgangsübertrager
CONNECTION DIAGRAM FOR OUTPUT TRANSFORMER

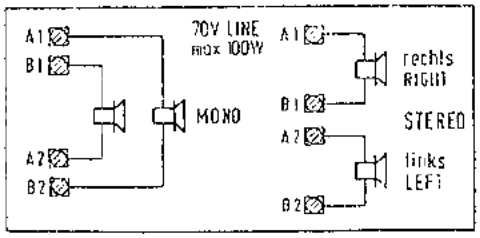

Klemme TERMINAL Nr.	Lautsprecher SPEAKER 2,5 Ω	4 Ω	8 Ω	16 Ω
0 - 5	190 W	70 W	45 W	27 W
0 - 4	68 W	30 W	16 W	8 W
0 - 3	24 W	15 W	8 W	4 W
0 - 2	12 W	7,5 W	4 W	2 W
0 - 1	3 W	1,8 W	1 W	0,5 W

Maximum Power Output Connections

The maximum power output of the amplifier is 2x200 W music power at 2 ohms.
The following is an example of how to connect external loudspeakers to the "CD GALAXY": The phonograph itself consumes (when directly connected at 5,5 ohm impedance) 2x70 watts.
Therefore, 2x130 W is still available for external loudspeakers.
For example, two 4-ohm loudspeakers each can be connected to Terminals 0-5 (see diagram) or four loudspeakers (with 4 ohms each) can be connected to Terminals 0-4.

Example for connection of wallboxes or Hide-Away's
If loudspeakers with 4 ohm are connected directly to a wallbox or Hide-Away, the consumption is 100 watts; therefore, there is only 100 watts left for the loudspeaker connected to the transformer.

Connection for Lower Phonograph Output Power

When full power is not required from the phonograph, it can be connected to the corresponding terminals of the transformer and external loudspeakers can then be connected directly to the output amplifier for higher output.

70 V - High Voltage Output

Additionally, the transformer also has a 70 V high-voltage output (A1-B1/A2-B2) for each channel.
These features are provided for operation of a widespread external loudspeaker system whereby the higher voltages keep the line losses low. Only loudspeakers with input transformers (socalled high-impedance loudspeakers of 50 ohms upwards) can be connected to this terminal. These outputs also provide a maximum of 100 W music power each, e.g. two 50 W loudspeakers (200 ohms) can be connected to each channel.

Lautsprecher-Impedanz Loudspeaker -Impedance	Ausgangsleistung A1-B1 Output power A2-B2
50 Ohm	100 W
100 Ohm	50 W
150 Ohm	35 W
200 Ohm	28 W
250 Ohm	20 W

The total wattage of all remote loudspeakers connected to one channel of the output transformer (whether low impedance, high impedance or combined) may not exceed max. 130 W.

HV - MONO Mode

Since the high-voltage coils are connected with their center, a loudspeaker connected to A1-B2 or B1-A2 radiates sound from both (stereo) channels; for this mono mode no special NF-coupling of the channels is necessary, coupling is provided by the transformer.

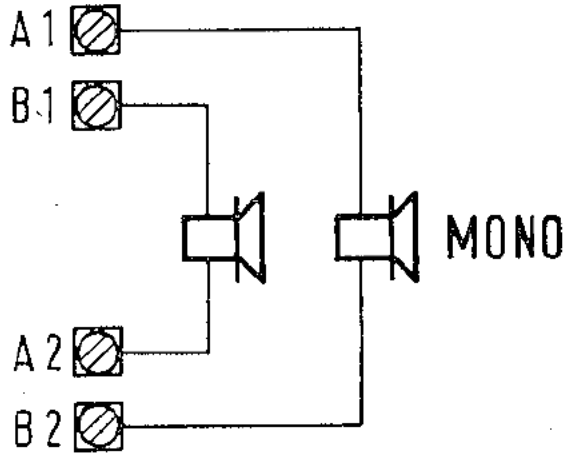

HV - STEREO Mode

If the loudspeakers are connected to A1-B1 nd A2-B2, stereo mode is possible, but without NF-coupling of the channels.

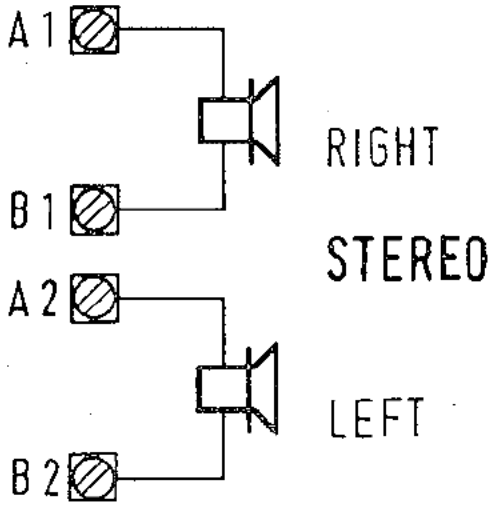

TROUBLE SHOOTING

FOR NSM-PHONOGRAPHS

ES IV-CD TECHNOLOGY

14

NSM
APPARATEBAU
GmbH & Co. KG
Postfach 1564 · 1565 6530 Bingen,1 · Germany · Allemagne
Saarlandstraße 240 · Telefon (06721) 407-0 · Telex 842216

PART-№
209830 A

INDEX

1. TROUBLE SHOOTING
1.1. Description of malfunction/cause
1.2. Error displays
1.3. Trouble shooting for NSM phonographs ES-IV/CD technology

1. TROUBLE SHOOTING

1.1. Description of malfunction/cause

DESCRIPTION	CAUSE
Phonograph illumination and LED's in central unit/CD supply do not light up.	1. Power cord 2. Main switch 3. Power fuse (switch plate/fuse box)
Phonograph illumination okay, LED's in central unit do not light up.	1. Plug connection ST 200 of central unit 2. Fuses Si 201-205 of central unit 3. Power transformer connection
Luminous effect lights do not light up. (Only for phonographs with light generator)	1. Fuse T 8 A on switch plate 2. Fuses Si 701-703 as well as 3. Plug connection of luminous effects PCB
Fan for output stage does not run while disc is playing.	1. Plug connection ST 209 2. Triac TIC 200 3. Transistors T 204/205
+5 V; +15 V LED's in central unit do not light up or are darker Fuses are okay	1. Voltage regulators VR 201-203 in central unit defective 2. Short circuit in connected units. (Pull plugs one after another and observe LED's)
No tone signal at loudspeaker even though a CD is playing and the volume is switched on.	1. Loudspeaker connection 2. Plug connection of frequency network and output transformer 3. Interruption on signal wire (plug connection "ST" 4 pol. of central unit to "ST 2" on changer adapter, from "ST 3" on changer adapter to decoder board).
Volume reduced by electronic protection device	1. Loudspeaker mismatch (less than 2 ohms impedance) due to remote speakers. 2. Transistor T 252 defective 3. Output transistor defective 4. Control unit defective
Poor bass reproduction	Loudspeaker connections reversed
Er xx-display	See "Error Displays"

1.2. Error Displays

Displays 1	2	3	Possible Causes	Corrections
	Er	01	EPROM contents (CONTROL UNIT) interrupted.	Change EPROM (IC 2).
	Er	10	RAM (CONTROL UNIT) defective.	Change RAM (IC 3). After that reprogram all program steps (P20-P56).
	Er	11	RAM contents (CONTROL UNIT) short-term disturbance.	No correction necessary; program is reinitialized. Change RAM IC 3 if frequently occurring.
	Er	20	Verification errors in program (CONTROL UNIT).	No correction necessary; program is reinitialized. Change CPU IC 1 if frequently occurring.
Pxx	Er	30	Memory contents (CONTROL UNIT) invalid.	No correction necessary; program step Pxx (in Display 1) is automatically reprogrammed.
Pxx	Er	31	Memory contents (CONTROL UNIT) invalid or not programmed.	Service step Pxx shown in Display 1 must be reprogrammed.
Pxx	Er	40	Wrong price setting.	Check price setting and, if necessary, reprogram (P41-P45, check sequence).
	Er	50	Coin mechanism defective. Too much credit.	Check coin mechanism.
	Er	6x	Error at CD player.	See Er 60 - Er 62. Play interrupted after error.
	Er	60	Error before playing CD (track selection).	Exchange decoder board, microcomputer T018 on pickup driver (IC8).
	Er	61	No CD recognized by player. No CD in CD tray, CD defective. Player defective. Decoder board defective.	Check CD and exchange if needed. Laser player (CDM-3). Exchange decoder board.
	Er	62	Error after playing CD (stop).	As in Er 60.
	Er	63	Track cannot be played (CD defective) or choosing a track number which is too high (error display appears only during continuous test P 60/3 or P 60/4; during regular operation track No. 1 is played when choosing a track number which is too high).	Exchange CD, check track selection.
	Er	7x	Malfunction on CD changer.	See Er 70 - Er 76. If error display does not disappear after 2 sec., error cannot be automatically corrected. No CD will be played until cabinet switch or "power on" is activated.
	Er	70	CD tray after playing CD incorrect in pickup.	Check function of light barriers OPPUM, OPGRL, OPGRR.
	Er	71	Error during grip from left-side magazine.	Check alignment from magazine to pickup assy and adjust if necessary. Check function of light barrier OPPUM.
	Er	72	Error during grip from right-side magazine.	As in Er 71.
	Er	73	Error during replacing in left-side magazine. Malfunction of left grip lever.	Check alignment of magazine to pickup assy and adjust if needed. Check function of grip. Check function of light barrier OPGRL.
	Er	74	Error during replacing of right-side magazine. Malfunction of right grip lever.	As in Er 73. Check function of light barrier OPGRR.
	Er	75	Malfunction during lift drive.	Check lift for jamming. Check function and correct adjustment of light barrier OPSTP (drive wheel).
	Er	76	End position of lift not o.k.	Check function and adjustment of light barrier OPEND.
	Er	80	Short circuit on wallbox signal wire.	Check wallbox connection.

The memorized values of program steps P20 to P56 are checked after each "power on" and by activating the cabinet switch.
An error in the programmable memory area the corresponding program steps is show on Display 1; Pxx Er 31; the "error" lamp flashes.
After the phonograph is turned on, the malfunction display in Display 3 and the flashing of "error" remains visible for 2 sec. After that the phonograph is operational; without regarding the malfunctioning program step, though.

1.3. Trouble-Shooting Chart for NSM Phonographs ES-IV/CD Technology

Conditions: Line voltage present, line connection and power supply in order.

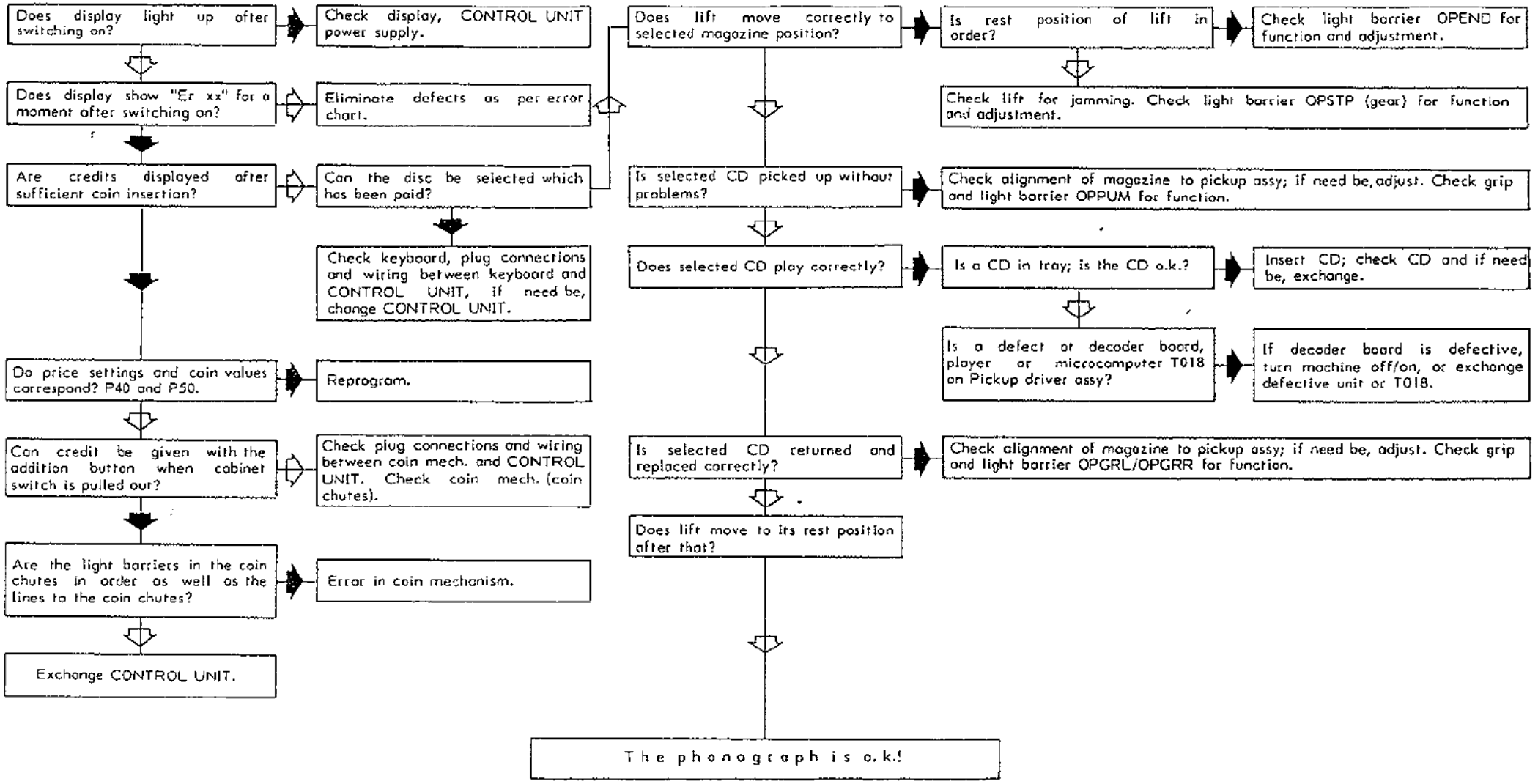

yes

no

Compare also 1.2. "Error Displays".

ACCESSORIES

FOR NSM-PHONOGRAPHS

ES IV-CD TECHNOLOGY

NSM
APPARATEBAU
GmbH & Co. KG
Postfach 1564 + 1565 · 6530 Bingen 1 · Germany · Allemagne
Saarlandstraße 240 · Telefon (06721) 407-0 · Telex 04 22 16

PART-№
209 831 A

INDEX

1. Microphone with paging switch

2. REMOTE CONTROL WALL BOXES

3. REMOTE CONTROLS
3.1 Infrared remote control
3.2. Remote control with cable

4. TAPE RECORDER CONNECTION CABLE

5. OUTPUT TRANSFORMER with cable harness

6. DOLLAR BILL ACCEPTOR -ARDAC MINI-(only for USA)
6.1. Installation Instructions for DOLLAR BILL ACCEPTOR in "CD GALAXY"
6.2. Installation Instructions for DOLLAR BILL ACCEPTOR in wallbox

7. "NSM DATA PRINT"
7.1 Output on printer

1. MICROPHONE with Paging Switch — Part No. 224 223

Socket for microphone	Part No. 225 758
Connection cable with plug and microphone socket	Part No. 171 880 (10 m)
Plug for central unit	Part No. 225 260

Connection via microphone socket to the central unit.

Microphone announcements are possible in any phonograph mode.

The microphone amplifier with electronic switch-over is integrated into the central unit.

The volume for the background music and microphone can be adjusted separately in the central unit.

2. REMOTE-CONTROL WALLBOXES

"FIRESTREAM" - Part No. 173 600
"CARAVELLE" - Part No. 173 450

For connection to NSM phonographs in CD technology. Connection Adapter 173 985 belongs to the equipment.

Detailed installation instructions are included in the adapter kit.

3. REMOTE CONTROLS

3.1. Infrared Remote Control

Part No. 174 258

Wireles remote control consisting of transmitter, receiver and parts for installation. See wiring diagram for connections.

3.2. Remote Control with Cable

Part No. 171 743

The connection points are illustrated in the wiring diagram and described in unit description "REMOTE CONTROL".

4. TAPE RECORDER CONNECTION CABLE

Part No. 172 025

Connection for tape recorders with DIN input and output.
Connection for additional amplifier.

5. OUTPUT TRANSFORMER with cable harness

Part No. 172 431

Significantly expanded adaptation capabilities and low line losses with 70 V output.
(See unit description "OUTPUT TRANSFORMER")

6. DOLLAR BILL ACCEPTOR -ARDAC MINI- (only for USA)

6.1. INSTALLATION INSTRUCTIONS for DOLLAR BILL ACCEPTOR in "CD GALAXY"

- Install chute in place of cover in lid (see Fig. 1).

- Hang dollar bill validator into the 2 attachment studs (Pos. 1).
  The unit must be installed so that it does not interfere with the lid when closing - however, the chute must close tightly to the dollar bill validator.
  The depth can be adjusted at Pos. 2.
  The height should be adjusted at Pos. 3 so that the dollar bill validator is aligned with the chute in the lid and is guided exactly into the acceptor slot (see Fig. 1).
  Secure dollar bill validator with sheet metal screws F 3.9 x 6.5 at Pos. 4.

- Install dollar bill adapter PCB (Pos. 6) on 2 spacers with wood-screws to the left inside of cabinet.

- Put 2 contacts from the harness (as can be seen in Fig. 2/ Pos. 5) into Plug Housings 6 and 7 of the 21-pole plug.

- Mount dollar bill electronic (control box) as shown in illustration.

- Make plug connections from dollar bill adapter PCB to the acceptor to the control unit and to the control box; plug connection cable from control box into plug; plug in control box into service socket.

- Program price setting (plays/monetary value) in program step 45, e.g. "07 100" = 7 plays/1 dollar).

- Program monetary value in Program Step 45, e.g."07 100" = 7 plays/1 dollar.

- Program monetary value for Channel 5 in Program Step 55; e.g. "100" = 1 dollar.

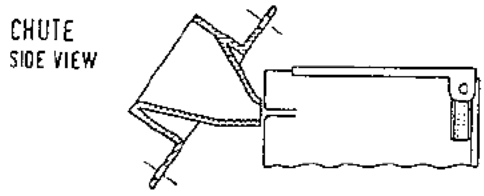
CHUTE
SIDE VIEW

Fig. 1

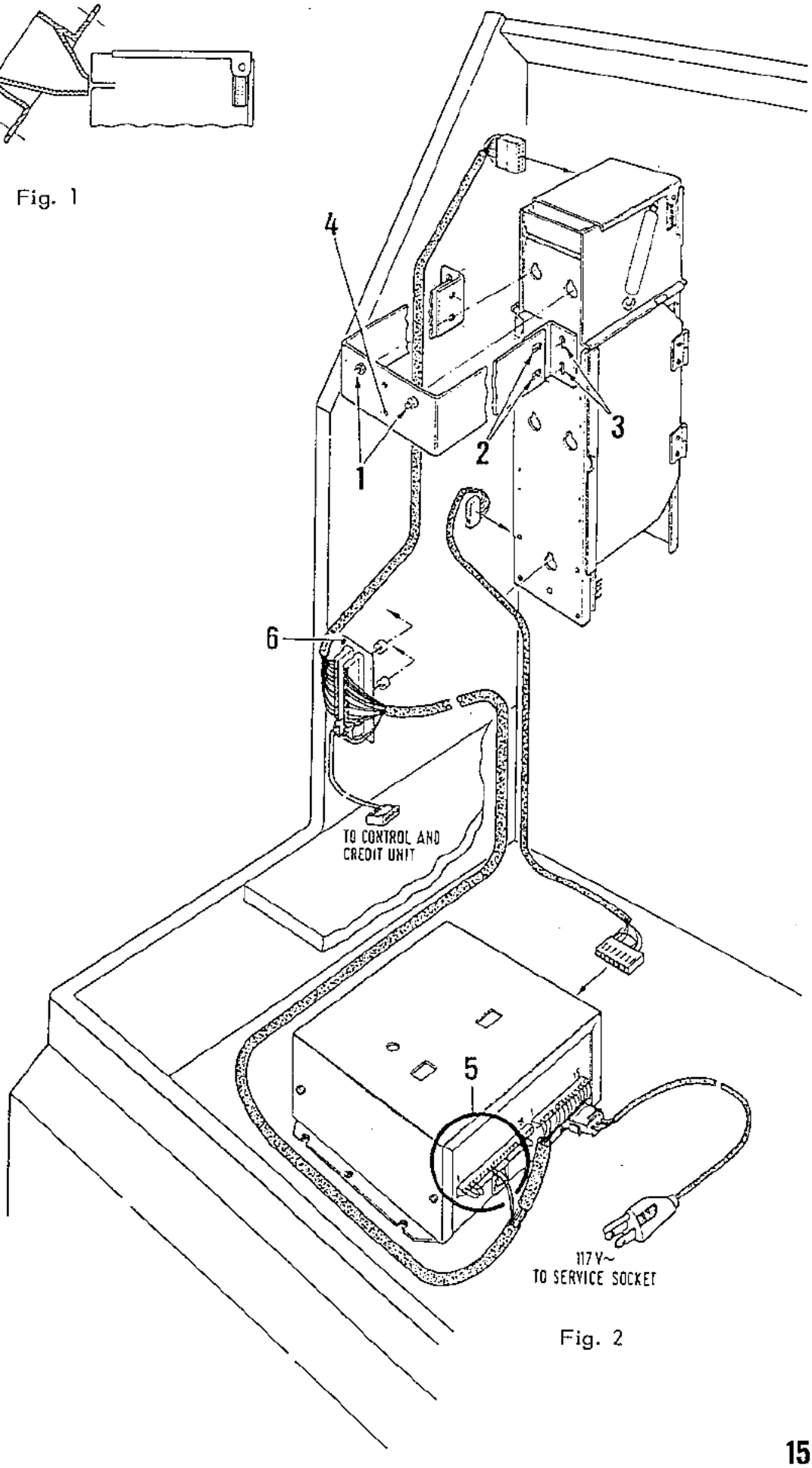
4
1
2
3
6
TO CONTROL AND
CREDIT UNIT
5
117 V~
TO SERVICE SOCKET

Fig. 2

6.2. Installation instructions for DOLLAR BILL ACCEPTOR in wallbox "Fire" and remote control wallbox "FIRESTREAM"

- Pull up latch (1) and adjust stacker (2) so it is positioned vertically under the acceptor (3).
- Hang dollar bill validator into the 2 studs (4). The unit must be installed so that it does not interfere with the lid when closing - however, the chute must close tightly to the dollar bill validator. The depth can be adjusted by loosening the three screws (5) and by moving the bracket.
  The height can be adjusted by loosening the four screws (7) and moving in a vertical direction; bill validator must be aligned with the chute in the lid and guided exactly into the acceptor slot.
- Secure dollar bill with screw M 4 at Pos. 8.
- Move stacker backwards into its final position until the latch (1) locks in at the second position.
- Put the 2 contacts from the harness, as seen in Pos. 9, into plug housings 6 and 7 of the 21-pole plug.
- Mount dollar bill electronic (control box), as shown in illustration, at the top of the cabinet. First push it into rear guide studs, then mount the front side with two screws. The plastic discs serve as spacers between the control box.
- Make plug connections to the acceptor, to the stacker and to the control box. Plug power plug from control box into service socket (10).
- Program price setting (plays/monetary value) in program step 45, e.g."07 100" = 7 plays/1 dolar.
- Program monetary value for channel 5 in program step 55, e.g. "100" = 1 dollar.
- Lay harnesses so that they do not hinder other units!

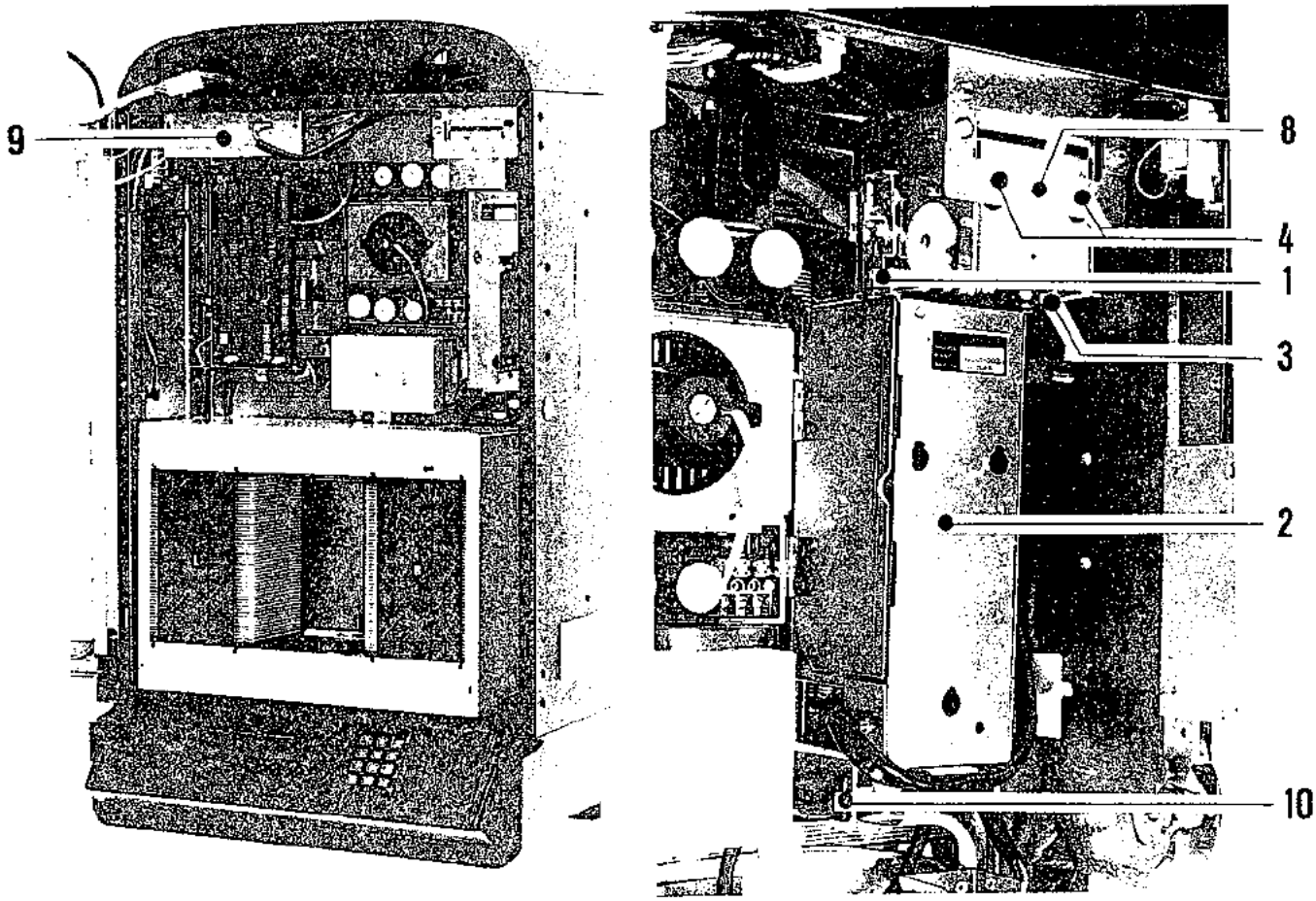
9
8
4
1
3
2
10

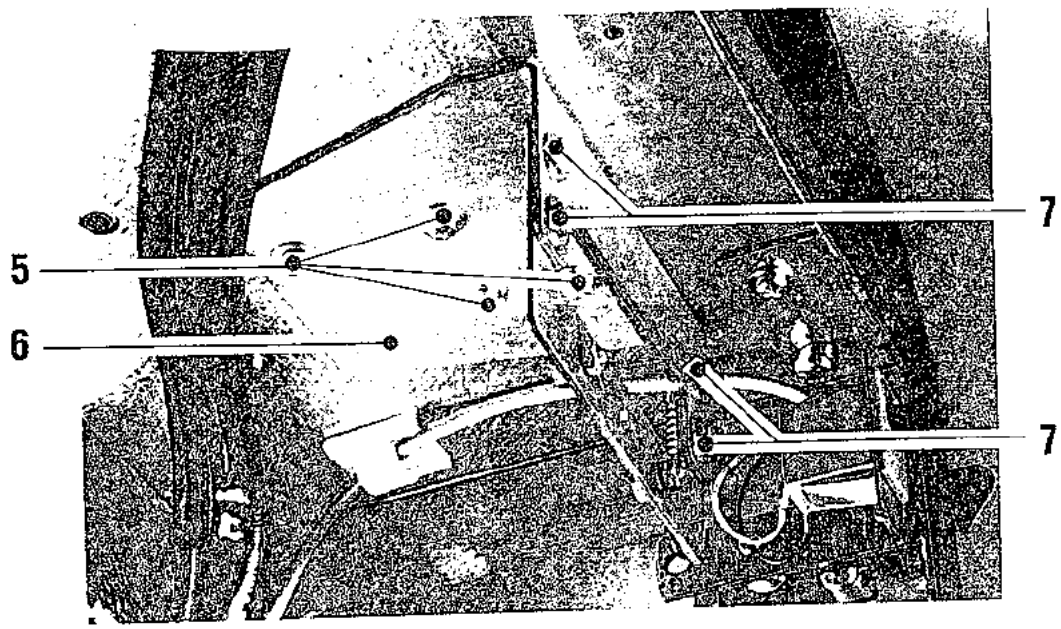
7
5
6
7

7. NSM DATA PRINT

The printer is intended for connection to:

- NSM phonographs ES-IV CD Technology
- A detailed description is included with the printer.
- Putting in the paper roll and color ribbon are described in detail in the TECHNICAL INFORMATION for the NSM DATA PRINT.

7.1. Transfer to Printer

- Switch on service program by opening cabinet; if needed, pull the cabinet switch manually, Display 1 "P01."
- Plug printer connector into socket of CONTROL UNIT.
- Enter "C," Display 1 "P."
- Enter "12" and "H," Display 1 "P12."
- Enter code for the desired print-out and press "H."

  "1" and "H" = Counters (P03 to P08)
  "2" and "H" = Counters and settings (P03 to P08, P21 to P37, P39)
  "3" and "H" = Counters and popularity (P03 to P08, P01, P02)
  "4" and "H" = Counters, settings and popularity (P03 to P08, P21 to P37, P39, P01, P02)

Note: When a popularity counter has reached value 200, all popularity counters are divided by half of the amount. After dividing the popularity printed out is relative; the number of divisions appears in the printout: "RELATIVE 000" to " xxx."
If the printer does not start, "E0" appears in Display 3.

DATA PRINT

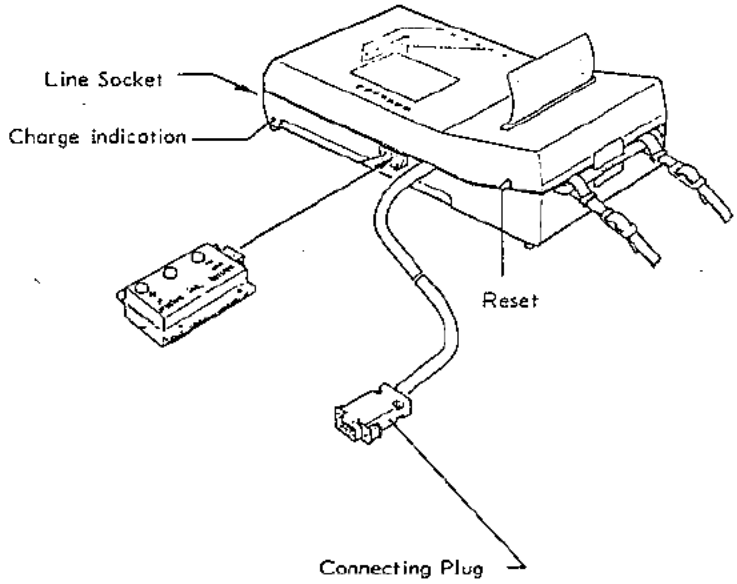
Line Socket
Charge indication
Reset
Connecting Plug

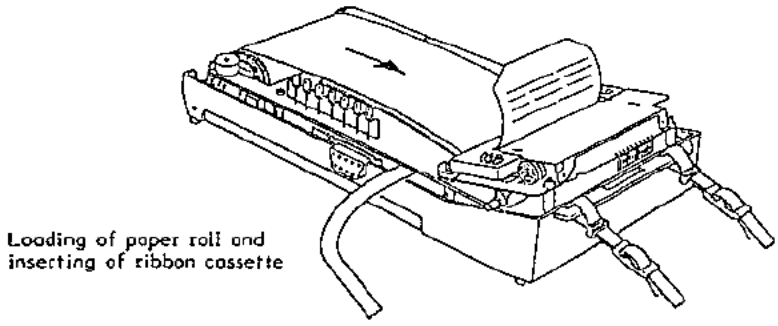
Loading of paper roll and
inserting of ribbon cassette