CONSUL 120

60 cycles

INSTALLATION OF THE PHONOGRAPH CONSUL 120

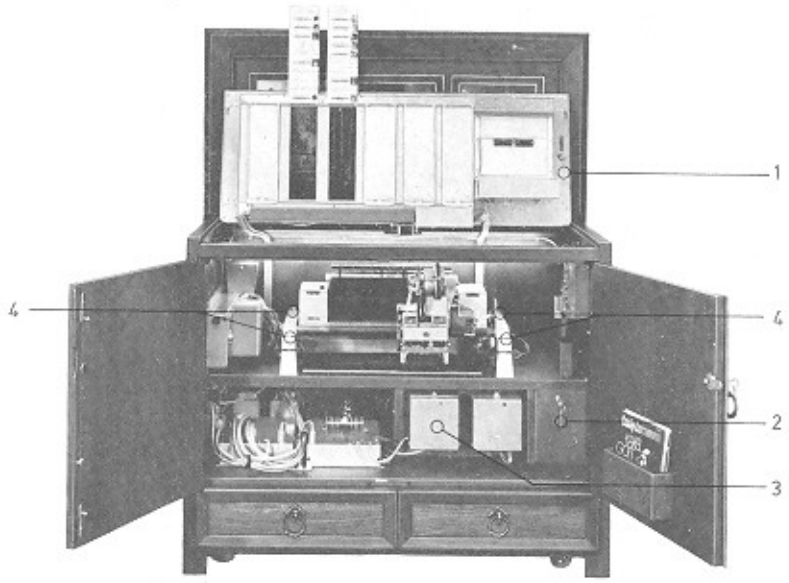

Fig. 1

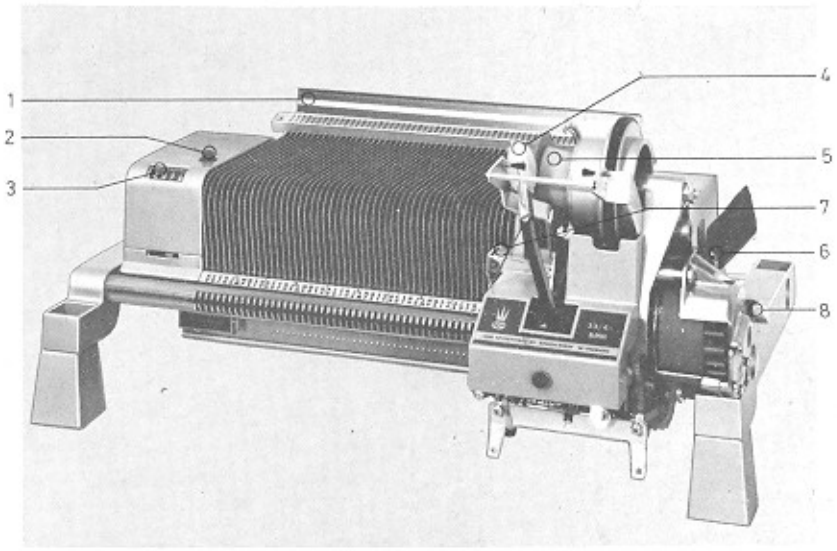

Fig. 2

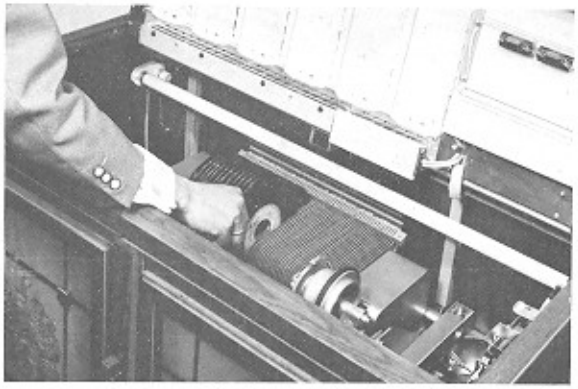

Fig. 3

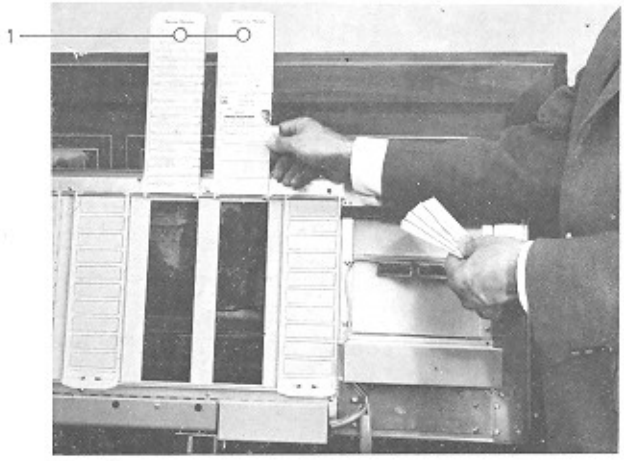

Fig. 4

See instructions next page ⟶

PLEASE READ INSTRUCTIONS BEFORE INSTALLATION

GENERAL

1. If external damage due to transport is noticed, this should at once be recorded on the delivery note and endorsed by the person making the delivery (Forwarding Agent, Railways, etc.). The manufacturer is not liable for damage caused during transit.

2. Devices for the safety and protection during transit must be removed before switching the phonograph on. They must, however, be refitted in the event of further transit.

3. All standard models of the phonographs are for a line voltage of 117 V/60 cycles.

4. The box is supplied with a 3-core line cable. Green-yellow must be connected to earth, corresponding to international wire code.

5. The proper functioning of the phonograph necessitates it to be horizontally and vertically levelled.

INSTALLATION OF THE PHONOGRAPH

1. Remove cabinet keys located at the front door.

2. Lift the top lid of the cabinet.

3. Unlock and open right front door. Unlatch top and bottom of left front door by depressing spring loaded latch. Unlatch lid containing program holder (figure 1-1).

4. To loosen carriage, remove screws painted red (figure 2-6 and 8) on the right hand sjde of the carrige base. Turn the security lever on the left hand side of carriage clockwise.

5. To loosen record clamp arm, remove rubber ring (figure 2-5) and rubber wedge (figure 2-7).

6. To free pick-up arm, remove rubber band, but leave the stylus cover on (figure 2-4) in order to protect the diamonds.

7. To loosen carriage base, unscrew four nuts (figure 1-4) up to the catch.

8. ATTENTION: Check mains voltage before connecting! After plugging mains plug into the wall socket, switch on line switch on the back of the cabinet. (Fluorescent lamps should now light up.)

9. By depressing the scan button (figure 2-2) let the carriage move from its rest position on the right to the left and remove card board strip out of groove.

10. Seize handle at the bottom of the title strip holder section (figure 4-1) and lift up title strip holders.

11. Open cash box, title strips will be found in the cash bag. After lettering the title strips, insert same in the desired succession into the title holders A—V. After adjustment arrange in proper order the "ALBUM" title strips.

12. Insert records into record magazine (figure 3) in the order of the title strips, the upper lettering of the magazine marking to the left. Move carriage by pushing it by Hand to any desired position.

13. Remove stylus covers from cartridge. (Save the covers for later use.)

14. Slightly press lid containing program holder downwards till it latches in.

15. Lock cash box and remove key (figure 1-2).

16. Close front doors and lock cabinet.

17. IMPORTANT WHEN TAKING OUT CARRIAGE. Also on this model, the carriage can be taken out for servicing. In case the carriage has to be taken out, make shure that the security lever on the left hand side is completely turned to the back. Lift locking levers (2), located on both sides of carriage, with both hands. When inserting carriage, follow reserve procedure.

18. IN CASE OF TRANSIT: move carriage to the extreme right and insert safety screws. All other safety and protection devices have to be mounted contrary to above described sequence.

CONTROL AND SERVICE SWITCHES:

Credit Button: Free play button, each pulse gives one credit. Located on inside of the right hand side of the cabinet — the upper button on coin acceptor assembly.

Credit Cancel Button: All credits can be cancelled. Located on inside of the right hand side of the cabinet — the lower button on the coin acceptor assembly.

Record Reject: By holding the button down for 1.5 seconds, any record can be rejected before end of play. Locations: one is located on the back left hand corner of the cabinet and one is on the control box.

Scan Button: permits travel of the carriage to any desired place. Located at the left hand side of carriage base.

TAKING INTO OPERATION:

After inserting coin for single play, the single indicator lights up. After inserting coin for ALBUM play, the ALBUM indicator lights up. If both indicator lights are lit Album or Single Plays may be selected. When only Single indicator light is lit, only Single Play can be selected. After selection has been made, selection light will go out. Bent coins or slugs will — either immediately or after pressing the coin reject button — drop into the coin return cup.

The corresponding letter and number buttons are to be pressed. It is immaterial, which button will be pressed first. After the selection has been made, the buttons will be released. The selected and now playing record is being indicated by lighted figure- and letter-fields on the green panel.

The control box is fitted with a volume control and one reject button. The volume of both channels can be adjusted together. Upon request volume control box R2 for separate volume control is available.

In case of low volume the bass will automatically be reproduced louder (physiological volume control).

The control box is mounted at the back of the cabinet. It can easily be taken out and used as a remote control. (Cover hole with protection plate.)
A 3 core shielded or unshielded cable can be used (at separate control 4 wire cable).
Therefore connection is possible at any location where remote control cable is on hand.
The remote control cable has to be connected to the corresponding terminals between amplifier and volume control box.

The box is equipped with a new type popularity meter (figure 2-1) that indicates — easily detectable — the playing frequency of each record. The popularity meter can — by one simple movement of the lever — be reset to "0".

The total play meter is located on the left hand side of the carriage base (figure 2-3).

Used or damaged diamonds can — together with their holders — easily be removed from the cartridge without any tools and be replaced by new ones.

CREDIT UNIT:

In order to alter credits, the corresponding wheel together with the needed slot have to be placed on the drive pin. For ex.:

1 play — slot nr. 1
3 plays — slot nr. 3
6 plays — slot nr. 6

Thus, any variation from 1 — 12 plays is possible.

1. Remove credit unit cover
2. Clap out base plate of credit unit
3. To take off top plate, loosen screw and remove circlip from main wheel pin. Take off plastic spacer and washer.
4. Remove tension spring
5. Take off top wheel
6. Refit wheel in such a way that the drive pin is led into the needed slot of the wheel
7. If second or third wheel has to be altered, follow same procedure as above. (Be careful to replace washers when assembling.)
8. Refit all other parts contrary to above indicated sequence.
9. Check with coins.
10. Change price instructions at the selector key panel. Credits and price instructions have to coincide.

DISCOTHEQUE / ALBUM:

An ALBUM-selection can be made, when sufficient credits have been accumulated. (See price instruction.) If, for ex., an ALBUM-selection is set for 3 credits, a minimum of 3 credits must be accumulated.

1. Positions 1 and 2 in the credit unit are connected with one contact finger and positions 3 and 4 with another contact finger.
2. Cam N4 of the switch mechanism (left hand side — carriage base) is set in such a way that 3 subtractions are realized in the credit unit at each ALBUM-selection.
3. Push open cover of the selector switches, contact finger at the selector switches must be changed from 1 to 2 for ALBUM-selection.

CONNECTION OF LOUDSPEAKERS:

The impedance of installed loudspeaker combinations is 8 Ω per channel. If additional loudspeakers are to be used, attention must be paid to the impedance matching.

In case of mismatching the electronic fuses in the amplifier will cut out.

The total impedance of the connected loudspeakers should not be less than 3 Ω per channel.

See inclosed "EXTENSION SPEAKER CONNECTIONS".
If desired outputtransformer is available Part No. 41513 (figure 1-3).
Max. music power = 60 Watts per channel.

MATCHING THE SOUND TO THE ROOM ACOUSTICS:

After lifting up selector key panel, the sound controls can be reached.

Treble-control switch
Bass-control switch
Record quality compensator
Channel level adjusting

Upon leaving the factory both channels are adjusted to the same level. If neccessary, the level may be limited to the desired maximum at the place of installation.

← While reading, unfold operating scheme to the left.

CIRCUIT DESCRIPTION OF CONSUL 120

After connecting the cord to the 117 VAC line and switching the machine ON, it is ready to operate. The 3 2/10 amp. slo-blo fuse protects the circuit of the flourescent lights, and the primary of the control transformer. The primary of the amplifier transformer is protected by the 1 2/10 amp. slo-blo fuse. All other circuits feed from the secondary of the transformer, and are thus insulated from the line voltage.

1. CREDIT

When a coin is deposited through the coin slot, it passes through the acceptor, closing the corresponding coin switch. This energizes the related add solenoid, a credit is made and the credit switch AK in the credit unit is now closed. Depending on the number of credits, the single-album switch KS will move to one of its contacts. Over contact AK the " Single Selection" lamp will be lit.

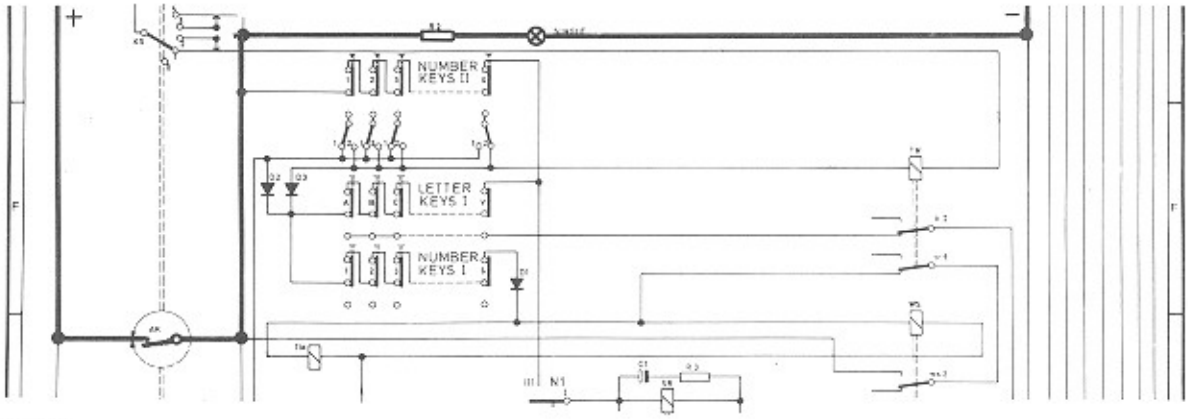

Circuit:
plus - AK - R2 - lamp, SINGLE - minus.

Simultaneously the circuit to the latch bar solenoid (TM) and the restart locking relay (WS) is closed.

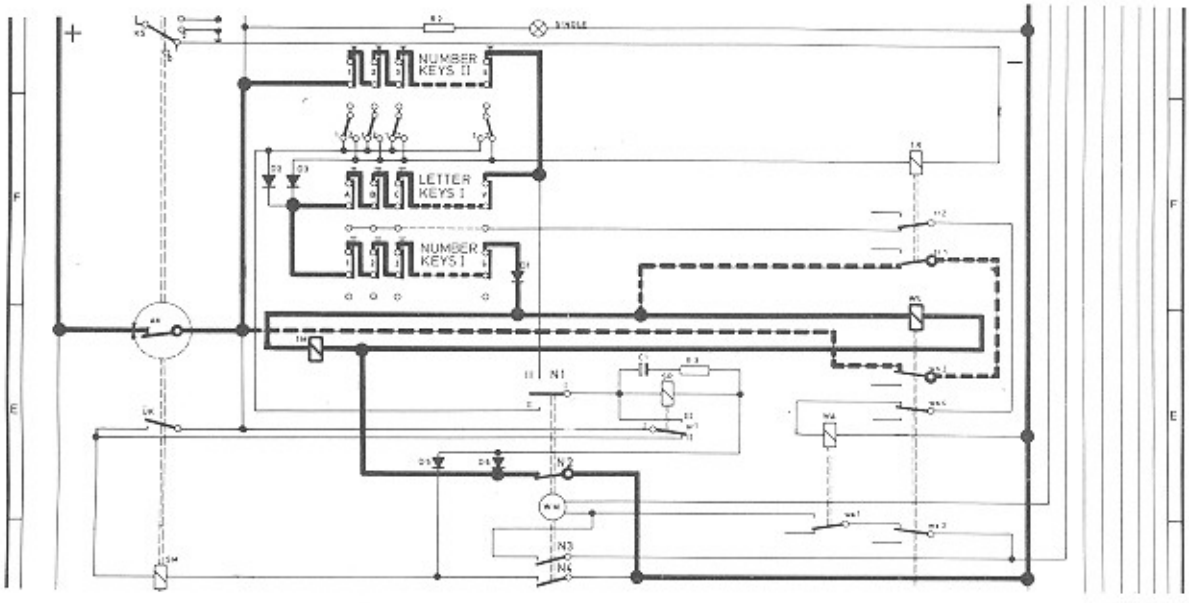

Circuit:
plus - AK - number keys II (1 through 6) letter keys I (V through A) - number keys I (1 through 6) - D1 - TM and WS - N2 - minus.

With the latch bar solenoid energized, the buttons will be able to lock in. The contacts on the restart locking relay, ws1 through ws4, are now switched over. Contact ws2 locks the circuit to TM and WS.

Circuit:
plus - AK - ws2 - tr1 - TM and WS - N2 - minus.

The price for album play can be changed (see credit unit). On the diagram, the album circuit is set for 3 credits per album. With less than 3 credits registered, the single-album switch KS is in the 1 or 2 position, thus connecting one side of the latch bar relay to minus.

2.1 SINGLE SELECTION CYCLE

When a number (single) and letter button are pressed, the circuit to the start relay (WA) is closed and the selection cycle starts.

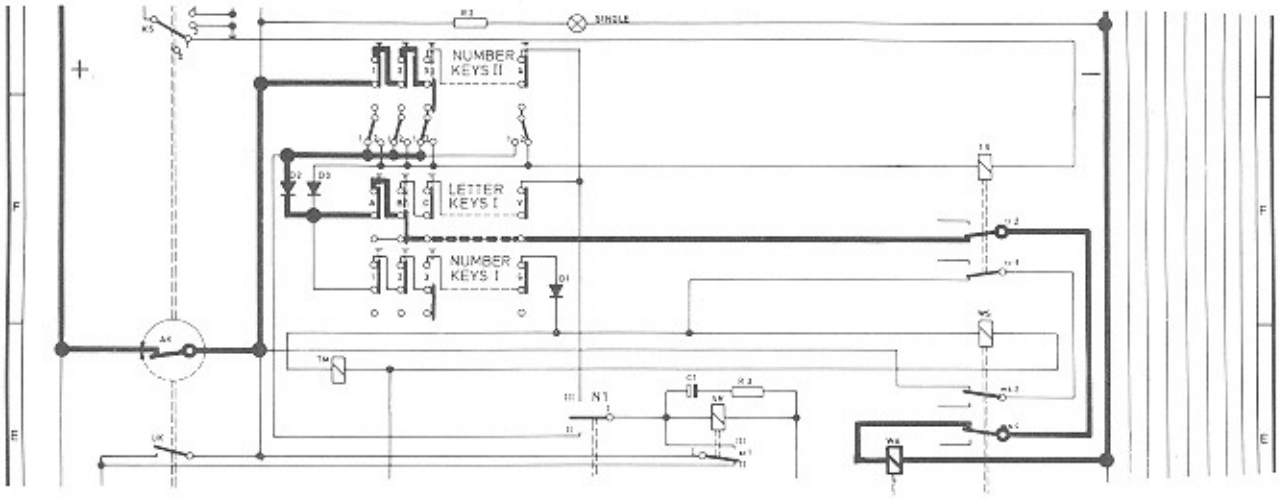

Circuit (B3 selected):
plus - AK - number keys II,3 - contact plate pos. 1 - D2 - letter keys I,B - tr2 - ws4 - WA - minus.

Energizing the start relay, closes contact wa1 hereby connecting the selection motor to the 30 VAC.

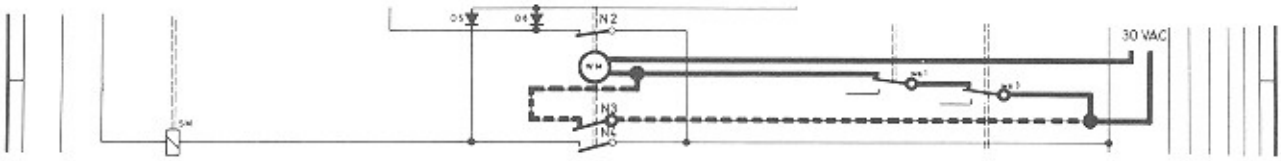

Circuit:
30 VAC - selection motor - wa1 - ws3 - 30 VAC.

The selection motor turns the contact cam, and contact N3 will close first.

Circuit:
30 VAC - selection motor - N3 - 30 VAC.

When contact N4 closes, the subtract solenoid (SM) is energized.

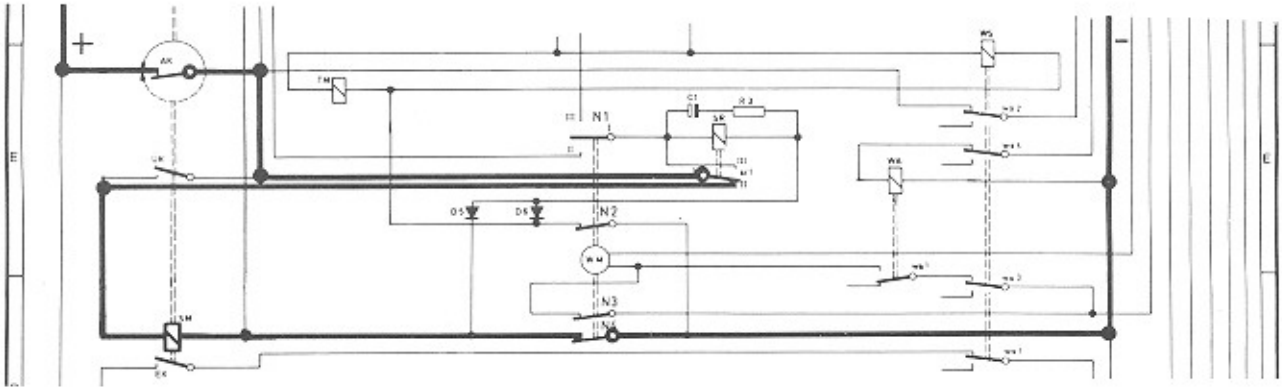

Circuit:
plus - AK - sr1 - SM - N4 - minus.

The movement of the subtract solenoid causes the carry over switch SÜ and the write-in trigger switch EK to close. When the write-in trigger switch is closed, the actual preselection is concluded, but this action will be described in paragraph 3. Now contact N1, II-1 closes, completing the circuit to the single relay SR.

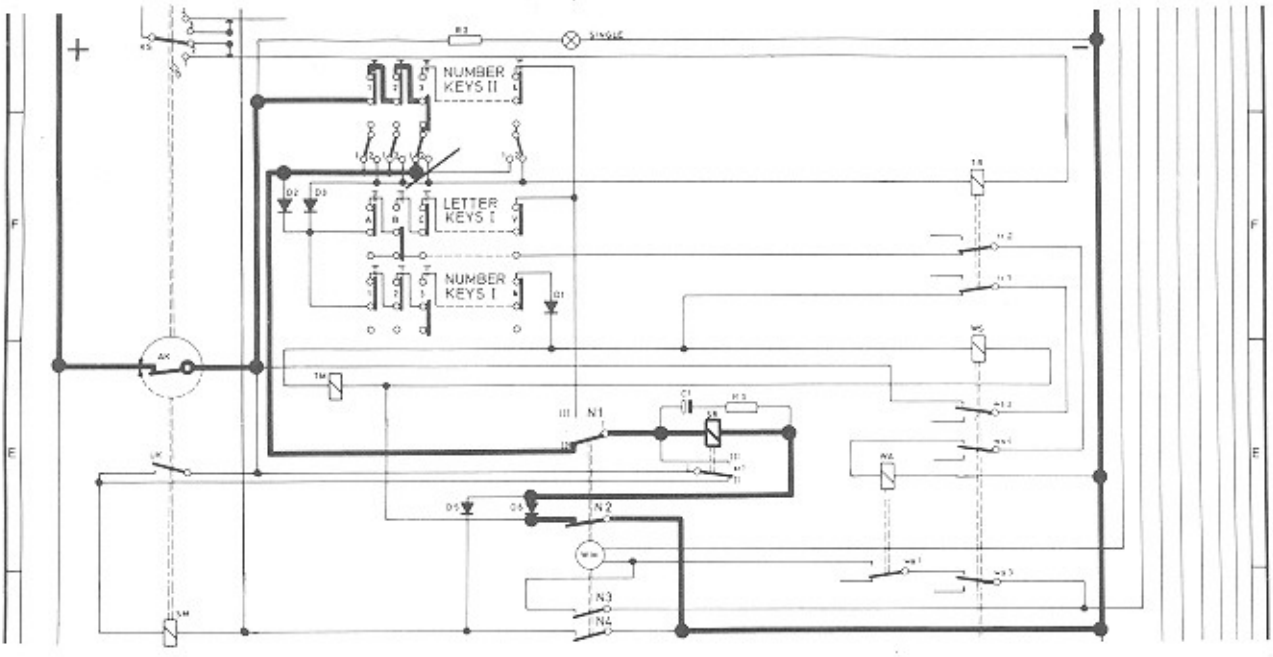

Circuit:
plus - AK - number keys II, 3 - contact plate pos. 1 - N1, II-I - SR - D6 - N2 - minus.

Single relay contact sr 1, I-II, opens the circuit to the subtract solenoid, thus cancelling all the other subtract pulses from contact N4, by single selection. Contact sr 1, I-III, is now the holding contact for the single relay. The single relay stays energized after N2 has opened. It gets the minus over N4 and D5. Time constant network R3 and C1 over the single relay, keeps the relay closed while N4 is open between pulses. The movement of the subtract solenoid moves the credit wheel back one credit.

The selection motor closes the scan switch, which completes the circuit to the carriage motor and the clutch solenoid (see scanning). Just before completing the one subtraction pulse, N2 opens the circuit to the latch bar solenoid and the restart locking relay. The buttons will now jump back to the rest position.

At the end of the selection cycle, contact N2 closed again. If anymore credit is available, the restart locking relay and the latch bar solenoid will energize again through N2 and the rest contacts of the buttons. If a button should stay down, the restart locking relay cannot pull in because contact ws4 is open. This prevents making any undesired selections.

The selection motor will stop running as soon as contact N3 opens.

2.2 ALBUM SELECTION CYCLE

The jumper blade of number key 6 on the contact plate is in position 2. If an album number key is pressed, and there is not enough credit available the latch bar relay (TR) will energize.

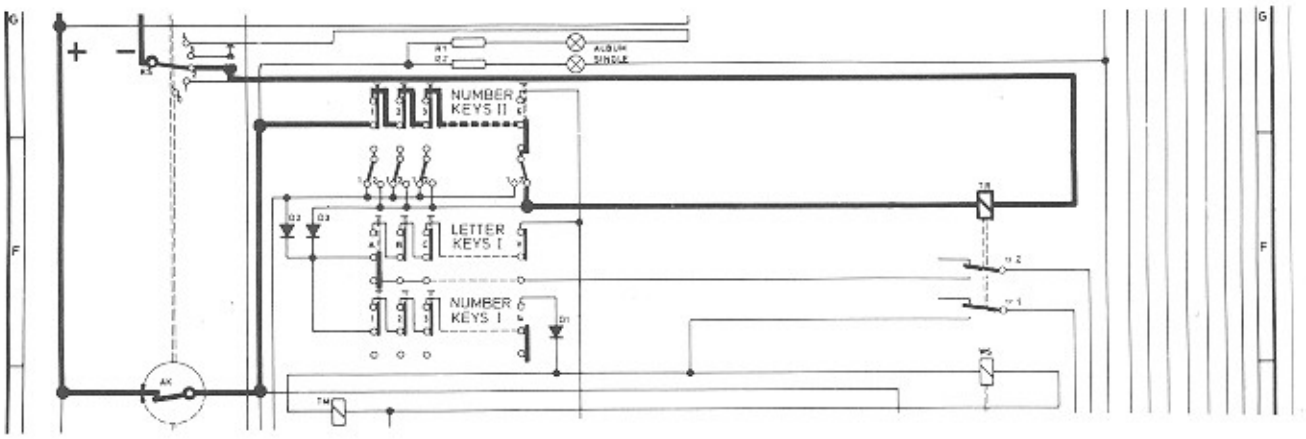

Circuit:
plus - AK - number keys II, 6 - contact plate pos. 2 - TR - single-album switch KS - minus.

When the latch bar relay energizes, and contact tr 1 opens the circuit to the restart locking relay an the latch bar solenoid, the buttons cannot latch, contact tr2 opens the circuit to the start relay, and no selection is made.

If 3 or more credits are available, single-album switch KS is in position 3 or 4, thus the negative line to the latch bar relay is open and the " ALBUM selection " lamp is lit.

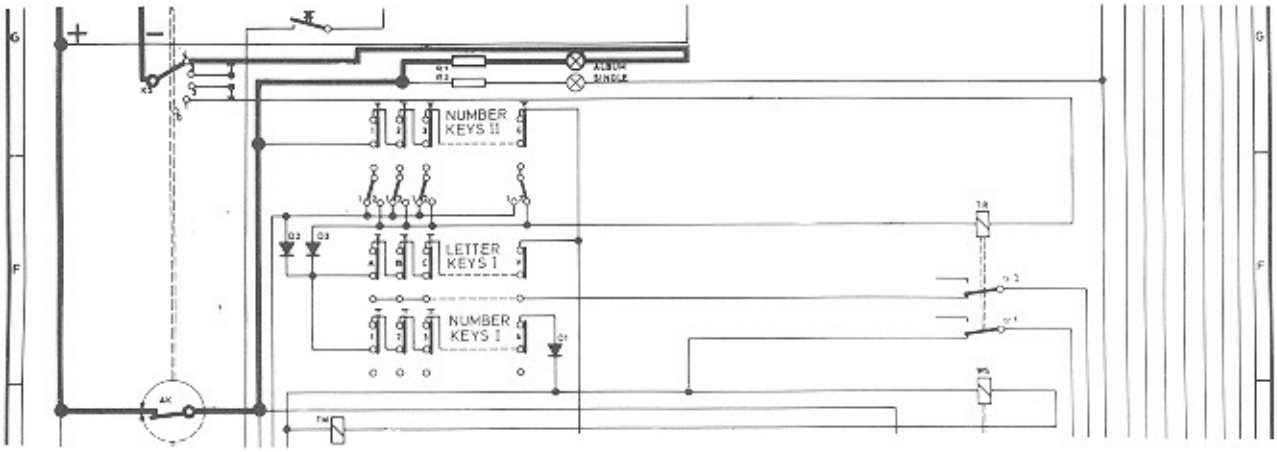

Circuit:
plus - lamp, ALBUM - R1 - single-album switch KS - minus.

If a number (ALBUM) and letter button is pressed now, the circuit to the start relay is closed and the selection cycle starts.

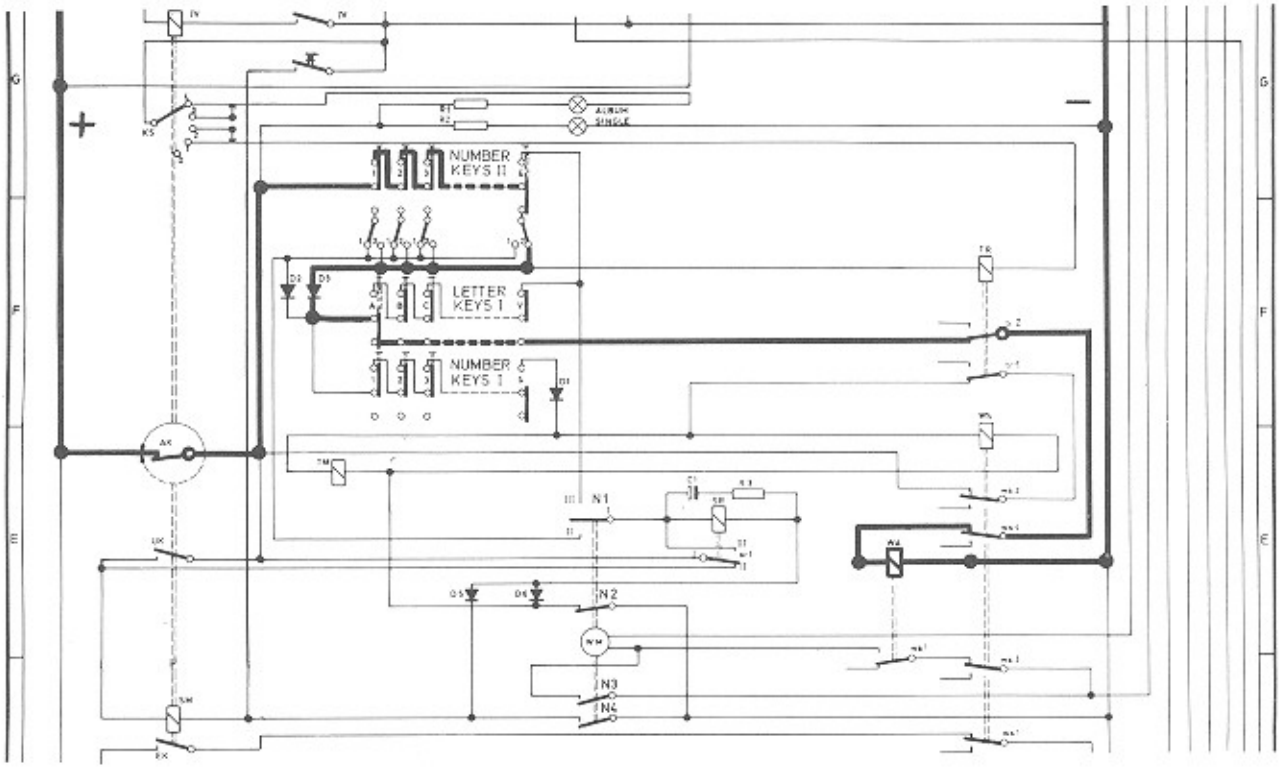

Circuit:
(A6 selected) plus - AK - number keys II, 6 - contact plate pos.2 - D3 - letter keys I, A - tr2 - ws4 - WA - minus.

The cycle is the same as for single selection, except the following. The single relay will not be energized by album selection, therefore all the subtract pulses from contact N4 will be registered. Because contact N2 opens after the first subtract pulse, the restart locking relay is deenergized, opens contact ws1, thus only the first write-in pulse from the write-in trigger switch will be used.

3. THE ELECTRONIC SELECTION SYSTEM

The CONSUL uses the more advanced electronic system using toroidal shaped magnetic cores of magnesium ferrite, called toroids. There are 120 toroids, one for each selection arranged in two rows of 60. The system uses a minimum amount of current, while the only moving parts, the read-out plungers, only touch the contacts.
The 120 toroids are ring shaped with a diameter of 4 mm. Because they are made of ferrite, they have very definite properties.

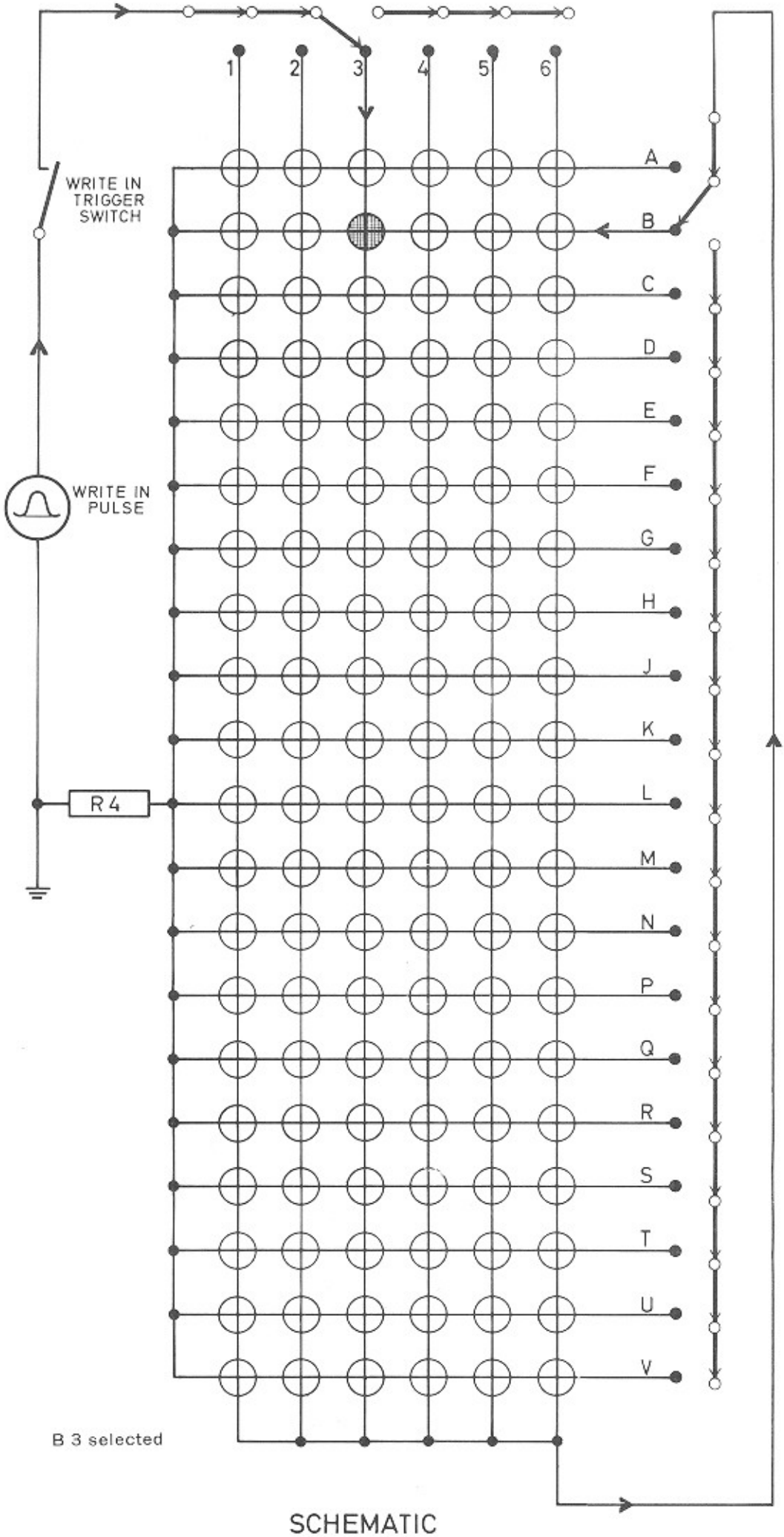

SCHEMATIC
MEMORY UNIT

Each magnet has a northpole and a southpole.

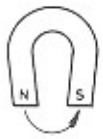

Magnetic lines run between the poles. With ring magnets, the lines form a closed circuit.

There are two conditions, the lines run clockwise, or they run counter clockwise.

To change a toroid from one condition into the other a magnetic field of well defined amplitude, shape, and polarity is necessary.

When electric current flows through a wire, a magnetic field builds up around the wire. The direction of the magnetic lines depend on the direction of the current in the wire.

4 wires run through each toroid, 2 for write-in, 1 for read-out, 1 for trip.

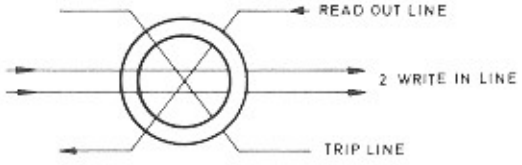

The electric pulses through these wires are of such amplitude and direction that the selected toroid will change its condition. We call the selected state the YES condition, the not selected state NO condition.

3.1 WRITE-IN (PRESELECTION)

From each number key a write-in line runs through that number group, then to the letter keys. From there a second write-in line runs through that letter group, over resistor R4 to negative. (See schematic).

When a selection is made, in this case B3, the pulse travels through the write-in trigger switch, the line going through all the number 3 toroids, to the letter keys, through all the B toroids, and over R4 back to minus. Thus, all the number 3 and letter B toroids receive a current of half the necessary amplitude, but only the toroid where the two lines cross, in this case B3, will receive the pulse with the needed amplitude to turn from the NO to the YES condition.

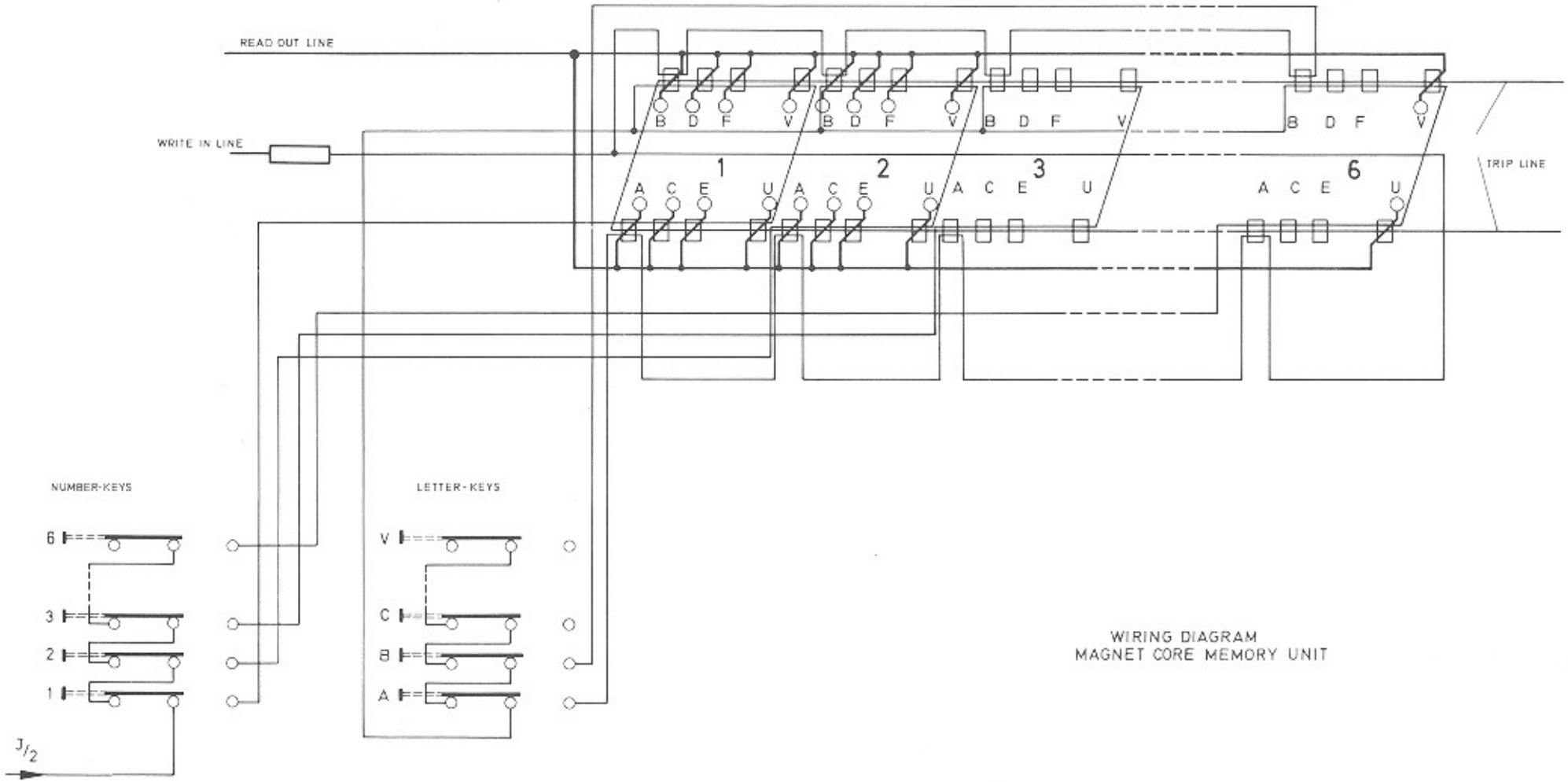

WIRING DIAGRAM
MAGNET CORE MEMORY UNIT

The 110 VAC coming from the secondary of the control transformer is converted to 300 VDC by the rectifier-doubler circuit of D10, C7, C8, D12, R15 and R16.

Over R12, the write-in capacitor C5 is charged to 300 VDC. R11 is a series resistor for Zener diode ZD1. Over voltage divider R9 and R10, a reference pulse is placed over C4, which through D11, will control the amplitude of the write-in pulse. When the write-in trigger switch is closed, capacitor C5 is discharged over contact ws1 through the network R5, C2, Dr1, R7, R6, C3, which will give the pulse the desired shape, over Dr2, number and letter keys, the selected toroid, and through R4 back to ground.

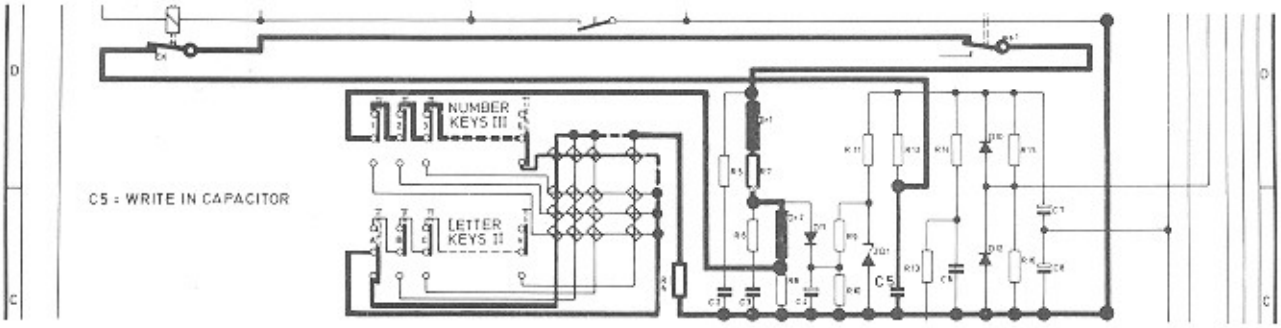

Circuit (A 6 selected):

C5 - write-in trigger switch - ws1 - pulse shape circuit - Dr2 - number keys III, 6 - toroids number 6 - letter keys II, A - toroids letter A - R4 - C5 minus.

Flipping over of toroid A 6 completes the write-in cycle of selection A 6

3.2 READ-OUT

As we saw before, the turning of the selection motor, closes the scan switch, thus energizing the clutch solenoid, and starting the carriage motor. The read-out contacts will touch each contact on the memory unit in sequence. From each contact a read-out line runs through the related toroid to minus. Each time the read-out contact touches a toroid contact the circuit to the search relay (AR) is closed.

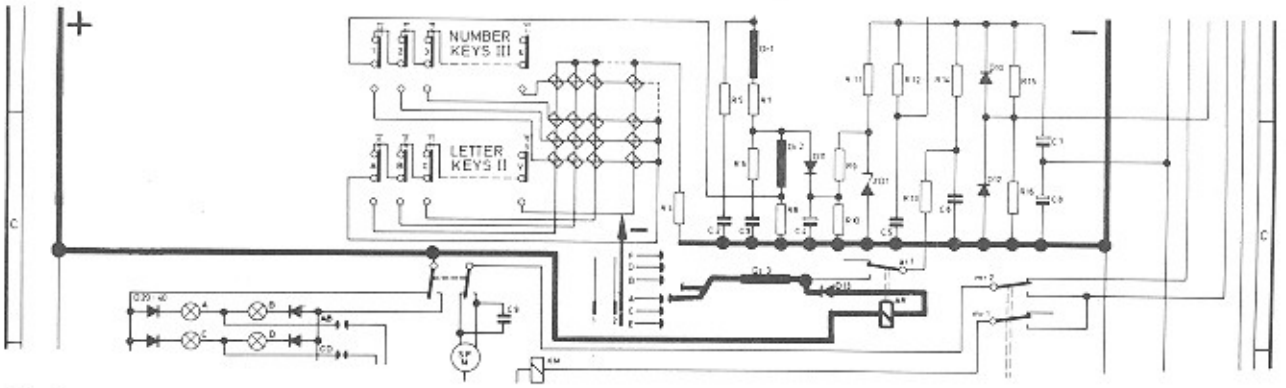

Circuit:

plus - AR - D13 - Dr3 - read-out contact - toroid contact - toroid - minus.

The search relay is energized. The current drawn by the relay through the toroids is not strong enough to flip a toroid over. This happens over the closing contact ar1. Now read-out capacitor C6, charged to 300 VDC, can discharge over R 13 through the read-out line. Amplitude and rise time of this pulse are controlled by R13 and Dr3.

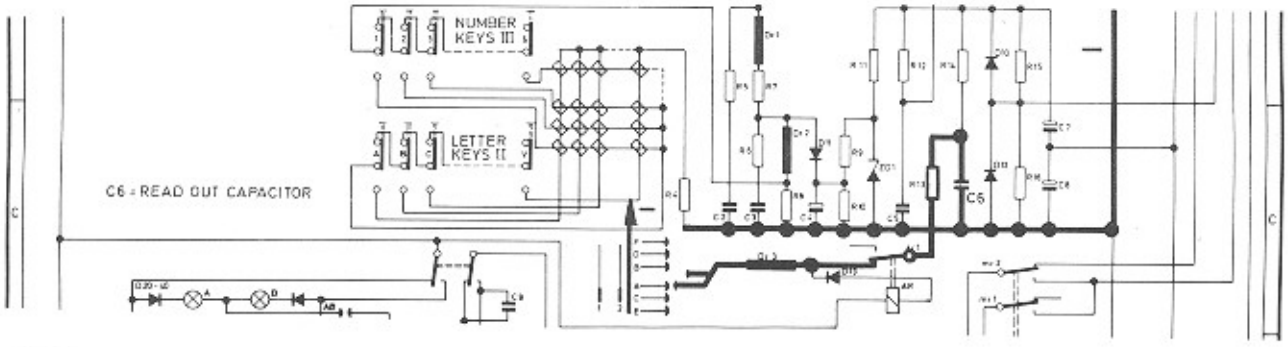

Circuit:

C6 - R13 - ar1 - Dr3 - read-out contact - toroid contact - toroid - C6 minus.

This happens with each of the 120 toroids

If we encounter a toroid in the YES condition, this will flip over. Because of the changing magnetic field, a pulse will be induced in the trip line. Because the amplitude and duration (1 μ sec.) of this pulse are very small, we feed it to a pulse amplifier.

3.3 TRIP

The trip pulse is of positive polarity. These pulses are integrated by the input network R19, R20, and C12, and coupled to the cathode gate of the Silicone Control Switch (SCS). The supply voltage for SCS comes from the 30 VDC, and is filtered and stabilized by the network C10, R18, C11 and ZD1. The capacitor C14, prevents premature conducting of SCS by any transient pulses in the circuit. The input of the puise amplifier is so designed that only pulses with the right amplitude and duration will trip the circuit. We can thus disregard the pulses induced during the write-in cycle, since these are of negative polarity. Capacitor C13 is discharged over R23 and contact Ir2, I - III. The positive trip pulse will cause SCS to conduct, and trip relay (LR) will be energized. This will cause contact Ir2, I - III, to switch. The relay will be held in by the charge current of C13. When C13 is completely charged the trip relay will deenergize. However, while the relay was energized, the anode gate of SCS was connected to ground by contact Ir2, I - II, causing the SCS to go back into cut-off. Contact Ir1 will have closed the circuit of the trip solenoid. (LM)

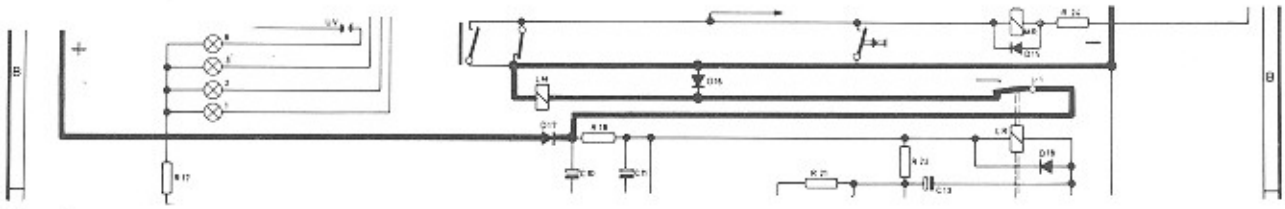

Circuit:
plus - D 17 - Ir 1 - LM - minus.

The trip solenoid uncouples the scan gear, the carriage stops, and the transfer cycle starts.

4. TRANSFER

The selected record is transfered by the transfer arm. The record clamp arm will sense the diameter of the centerhole, and determine the desired speed, 45 RPM or 33 1/3 RPM. The pick-up arm lands in the first groove. The operating switch opens, causing the motor relay (MR) and the muting relay (SR) to deenergize.

Motor relay contact mr 1: opens the circuit to the clutch solenoid.

contact mr 2: switches the carriage motor from 125 VAC to 80 VAC.

Muting relay contact sr 1: switches the amplifier ON.

5. PLAY

The needle will track the record.

6. END OF RECORD

When the needle reaches the cut-off groove the cancel reed switch will close, causing the motor relay and the muting relay to energize.

Motor relay contact mr 1: closes the circuit to the clutch solenoid.

contact mr 2: switches the motor back from 80 VAC to 125 VAC.

Muting relay contact sr 1: mutes the amplifier.

7. TRANSFER AND SCANNING:

After returning the record to the record magazine, the carriage unlocks itself from the gear rack, and the drive gear goes back from the transfer to the scan position. At each end of the record magazine is a lever which controls the reversing switch, hereby changing the direction of travel of the carriage. The carriage will scan twice and will come to its rest position if no more selections are made.

8. CONTROL AND SERVICE SWITCHES

Credit button: Free play button, each pulse gives one credit.

Credit cancel button: Each pulse will subtract one credit.

Record reject: By holding the reject button down for 1.5 seconds any record can be rejected before end of play.

Scan button: Allows travel and stop of carriage in any desired place.

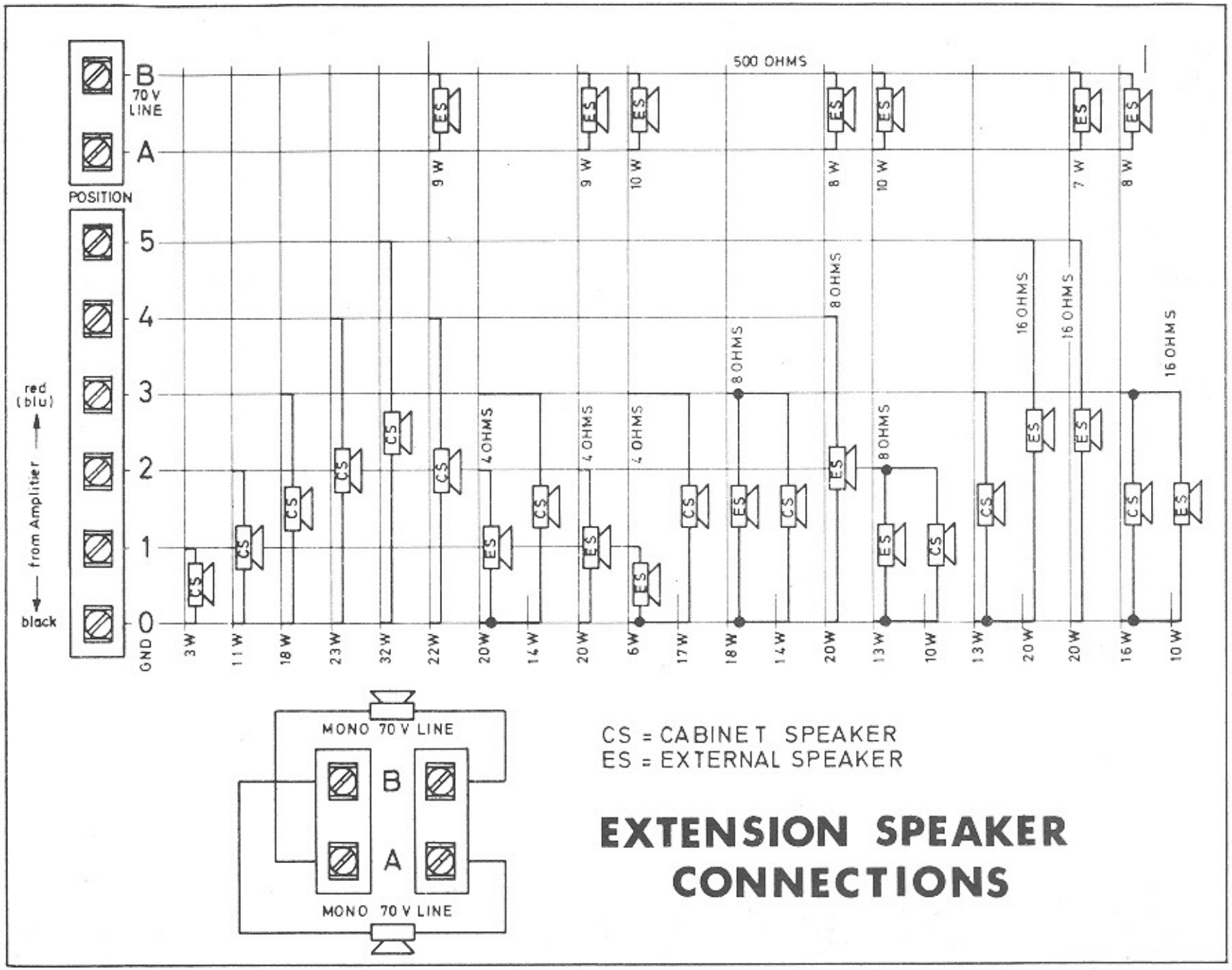

EXTENSION SPEAKER CONNECTIONS

TRANSISTOR-AMPLIFIER 70 S

R 2/R 2'	Carbon resistor	2	Megohm	½ W ± 10%
R 3/R 3'	Carbon resistor	8 200	Ohm	½ W ± 5%
R 4/R 4'	Carbon resistor	3 300	Ohm	½ W ± 10%
R 5/R 5'	Carbon resistor	1	Megohm	½ W ± 5%
R 6/R 6'	Carbon resistor	120 000	Ohm	½ W ± 10%
R 7/R 7'	Carbon resistor	27 000	Ohm	½ W ± 10%
R 8/R 8'	Carbon resistor	1 000	Ohm	½ W ± 5%
R 9/R 9'	Carbon resistor	3 900	Ohm	½ W ± 5%
R10/R10'	Carbon resistor	82 000	Ohm	½ W ± 10%
R11/R11'	Carbon resistor	390 000	Ohm	½ W ± 10%
R12/R12'	Carbon resistor	10 000	Ohm	½ W ± 10%
R13/R13'	Carbon resistor	8 200	Ohm	½ W ± 5%
R14/R14'	Carbon resistor	22 000	Ohm	½ W ± 10%
R15/R15'	Carbon resistor	2 700	Ohm	½ W ± 10%
R16/R16'	Carbon resistor	560	Ohm	½ W ± 5%
R17/R17'	Carbon resistor	4 700	Ohm	½ W ± 5%
R18/R18'	Carbon resistor	120	Ohm	½ W ± 5%
R19/R19'	Carbon resistor	27 000	Ohm	½ W ± 10%
R20/R20'	Carbon resistor	820 000	Ohm	½ W ± 10%
R21/R21'	Carbon resistor	120 000	Ohm	½ W ± 10%
R22/R22'	Carbon resistor	82 000	Ohm	½ W ± 10%
R23/R23'	Carbon resistor	10 000	Ohm	½ W ± 10%
R24/R24'	Carbon resistor	10 000	Ohm	½ W ± 10%
R25/R25'	Carbon resistor	10 000	Ohm	½ W ± 10%
R26/R26'	Carbon resistor	100 000	Ohm	½ W ± 10%
R27/R27'	Carbon resistor	120 000	Ohm	½ W ± 10%
R28/R28'	Carbon resistor	3 900	Ohm	½ W ± 10%
R29/R29'	Carbon resistor	8 200	Ohm	½ W ± 5%
R30/R30'	Carbon resistor	2 200	Ohm	½ W ± 10%
R31/R31'	Carbon resistor	22 000	Ohm	½ W ± 10%
R32/R32'	Carbon resistor	150 000	Ohm	½ W ± 5%
R33/R33'	Carbon resistor	150 000	Ohm	½ W ± 5%
R34/R34'	Carbon resistor	10 000	Ohm	½ W ± 10%
R35/R35'	Carbon resistor	1	Megohm	½ W ± 5%
R36/R36'	Carbon resistor	5 600	Ohm	½ W ± 5%
R37/R37'	Carbon resistor	68	Ohm	½ W ± 5%
R38/R38'	Carbon resistor	1	Megohm	½ W ± 5%
R39/R39'	Carbon resistor	220 000	Ohm	½ W ± 5%
R40/R40'	Carbon resistor	10 000	Ohm	½ W ± 10%
R41/R41'	Carbon resistor	15	Ohm	½ W ± 5%
R42/R42'	Carbon resistor	4 700	Ohm	½ W ± 5%
R43/R43'	Carbon resistor	4 700	Ohm	½ W ± 5%
R44/R44'	Carbon resistor	3 900	Ohm	½ W ± 10%
R45/R45'	Carbon resistor	1	Megohm	½ W ± 5%
R46/R46'	Carbon resistor	5 600	Ohm	½ W ± 5%
R47/R47'	Carbon resistor	68	Ohm	½ W ± 5%
R48/R48'	Carbon resistor	220 000	Ohm	½ W ± 5%
R49/R49'	Carbon resistor	150 000	Ohm	½ W ± 5%
R50/R50'	Carbon resistor	220 000	Ohm	½ W ± 5%
R51/R51'	Carbon resistor	5 600	Ohm	½ W ± 5%
R52/R52'	Carbon resistor	4 700	Ohm	½ W ± 5%
R53	Carbon resistor	1 500	Ohm	½ W ± 10%
R54/R54'	Carbon resistor	1	Megohm	½ W ± 5%
R55/R55'	Carbon resistor	1 000	Ohm	½ W ± 5%
R56/R56'	Carbon resistor	1 000	Ohm	½ W ± 5%
R57/R57'	Carbon resistor	1 200	Ohm	½ W ± 5%
R58/R58'	Carbon resistor	12 000	Ohm	½ W ± 5%
R60/R60'	Carbon resistor	1 000	Ohm	½ W ± 5%
R61/R61'	Carbon resistor	2 700	Ohm	½ W ± 5%
R62/R62'	Carbon resistor	560	Ohm	½ W ± 5%
R63/R63'	Carbon resistor	330	Ohm	½ W ± 5%
R64/R64'	Carbon resistor	330	Ohm	½ W ± 5%
R65/R65'	Wire resistor	1/2	Ohm	2 W ± 5%
R66/R66'	Wire resistor	1/2	Ohm	2 W ± 5%
R67/R67'	Carbon resistor	22	Ohm	½ W ± 5%
R68/R68'	Carbon resistor	8 200	Ohm	½ W ± 5%
R69	Carbon resistor	5 600	Ohm	½ W ± 5%
R70	Carbon resistor	220	Ohm	½ W ± 5%
R71/R71'	Carbon resistor	4 700	Ohm	½ W ± 5%
R72	Carbon resistor	4 700	Ohm	½ W ± 5%
R73/R73'	Carbon resistor	68	Ohm	½ W ± 5%
R74	Carbon resistor	1 500	Ohm	½ W ± 5%
R75/R75'	Carbon resistor	1 200	Ohm	½ W ± 5%
R76	Carbon resistor	1 000	Ohm	½ W ± 5%

P 1/P 1'	Trimmer resistor	500 Ohm ⅓ W. lin.
P 3/P 3'	Adjusting resistor	500 000 Ohm, lin.
P 4/P 4'	Adjusting resistor	2 500 Ohm, lin.
C 1/C 1'	Lytic	50 Mfd/ 15 V
C 2/C 2'	Mylar	0.1 Mfd/250 V
C 3/C 3'	Lytic	1 Mfd/ 35 V
C 4/C 4'	Lytic	50 Mfd/ 15 V
C 5/C 5'	Lytic	50 Mfd/ 25 V
C 6/C 6'	Lytic	10 Mfd/ 10 V
C 7/C 7'	Mylar	0.033 Mfd/250 V
C 8/C 8'	Mylar	0.015 Mfd/400 V
C 9/C 9'	Lytic	100 Mfd/ 3 V
C10/C10'	Lytic	250 Mfd/ 6 V
C11/C11'	Mylar	0.22 Mfd/250 V
C12/C12'	Lytic	25 Mfd/ 10 V
C13/C13'	Lytic	25 Mfd/ 10 V
C14/C14'	Mylar	0.01 Mfd/400 V
C15/C15'	Lytic	5 Mfd/ 35 V
C16/C16'	Lytic	10 Mfd/ 25 V
C17/C17'	Lytic	10 Mfd/ 25 V
C18/C18'	Lytic	50 Mfd/ 25 V
C19/C19'	Lytic	10 Mfd/ 25 V
C20/C20'	Lytic	100 Mfd/ 35 V
C21/C21'	Mylar	0.68 Mfd/250 V
C22/C22'	Mylar	0.22 Mfd/250 V
C23/C23'	Mylar	0.1 Mfd/250 V
C24/C24'	Mylar	0.1 Mfd/250 V
C25/C25'	Lytic	5 Mfd/ 35 V
C26/C26'	Mylar	0.1 Mfd/250 V
C27/C27'	Mylar	0.1 Mfd/250 V
C28/C28'	Mylar	0.1 Mfd/250 V
C29/C29'	Mylar	0.1 Mfd/250 V
C30/C30'	Lytic	250 Mfd/ 6 V
C31/C31'	Mylar	0.01 Mfd/250 V
C32/C32'	Mylar	0.033 Mfd/250 V
C33/C33'	Mylar	0.1 Mfd/250 V
C34	Lytic	1000 Mfd/ 35 V
C35/C35'	Lytic	5 Mfd/ 35 V
C36/C36'	Lytic	25 Mfd/ 10 V
C37/C37'	Lytic	25 Mfd/ 35 V
C38/C38'	Mylar	0.01 Mfd/400 V
C39/C39'	Lytic	50 Mfd/ 35 V
C40/C40'	Mylar	0.001 Mfd/160 V
C41/C41'	Mylar	0.22 Mfd/250 V
C42/C42'	Lytic	2500 Mfd/35/40 V
C43/C43'	Lytic	250 Mfd/ 6 V
C44	Lytic	5000 Mfd/ 70 V
D 1/D 1'	Silicon diode	1 N 4004
D 2/D 2'	Silicon diode	1 N 4004
D 3/D 3'	Silicon diode	1 N 4004
D 4/D 4'	Silicon diode	1 N 4004
D 5/D 5'	Silicon diode	1 N 4004
D 6/D 6'	Silicon diode	1 N 4148
D 7/D 7'	Silicon diode	1 N 4148
D 8/D 8'	Silicon diode	1 N 4148
D 9/D 9'	Silicon diode	1 N 4148
D10/D10'	Zener diode	BZY 85 C 4 V 7
D11	Silicon diode	1 N 4004
D12	Silicon diode	1 N 4004
T 1/T 1'	Transistor	BC 149 B
T 2/T 2'	Transistor	BC 149 B
T 3/T 3'	Transistor	BC 147 B
T 4/T 4'	Transistor	BC 147 B
T 5/T 5'	Transistor	BC 147 B
T 6/T 6'	Transistor	BC 147 B
T 7/T 7'	Transistor	BC 147 B
T 8/T 8'	Transistor	BC 147 B
T 9/T 9'	Transistor	BC 147 B
T10/T10'	Transistor	BC 147 B
T11/T11'	Transistor	40361 RCA
T12/T12'	Transistor	40362 RCA
T15	Transistor	BC 117 VI/BC 157 A
T16	Transistor	BC 147 B
RL 1	Mute relay	V 23154 — NO 721 — B 110

TRANSISTOR-AMPLIFIER 70 S

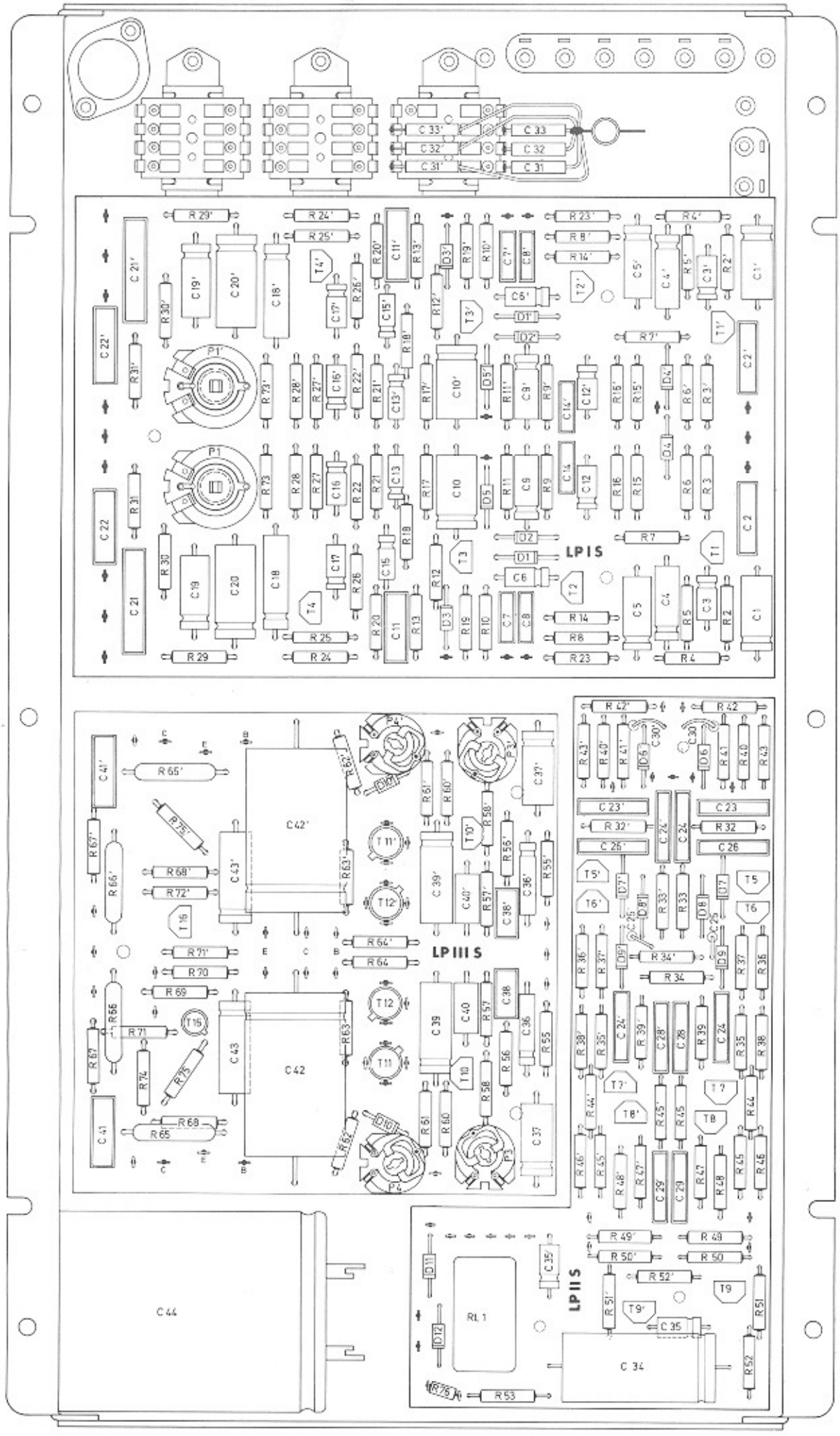

TRANSISTOR AMPLIFIER 70 S

The 70 S is a fully transistorized amplifier, free from iron cores and unaffected by supply voltage variations.
Output is 60 W. music power per channel.
Distortion is less than 1% at 20 W. sine output in frequency range of 20 cs to 20 Kcs.
The 2 channels are completely separate and the amplifier has 30 transistors and 22 silicone diodes, and is divided in 3 major sections.

1. PLATE I S

   Pre-amplifier with AVC and treble control.

2. PLATE II S

   Volume control and bass control network, and muting relay.

3. PLATE III S

   Phase splitter and output stage with electronic fuse.

1. PRE-AMPLIFIER (PLATE I S)

The audio signal from the cartridge is amplified by high input impedance transistor T1 and passed to the base of transistor T2. In order to obtain a constant output volume on records with varying recording levels, the next stage acts as AVC amplifier. After being amplified by T2, the audio signal is tapped before C16, and is coupled to the base of T3. The output of T3 in conjunction with D1, D2 and D3 forms a variable internal resistance: If the strength of the incoming signal changes, the AC-impedance of the network will also change and control the signal at the base of T2. Therefore, high signals will be amplified less and low signals will be amplified more. To reduce the background noise of old and worn records, a record noise compensating switch, with 3 positions, has been fitted into the circuit. To reduce the noise of the needle setting down on the record and entering the first groove, the AVC will allow the volume to reach its preset level with an 8 to 10 second delay. The output of each channel can be adjusted over 10 db. with the level controls.

2. VOLUME CONTROL (PLATE II S WITH MUTING RELAY)

The signal coming from emitter-follower T4 goes over level control P1 to the volume control circuit. Diodes D6, D7, D8 and D9, and transistors T5, T6, T7 and T8 make up the two wire volume control and bass boost circuit. With full volume, the volume control has zero resistance. No current will flow through the diodes, thus they have a very high resistance, several M ohms. Therefore, the signal going to T5 and T7 is of the same amplitude. T6 and T8 are the drivers for T9. The combination of T5 and T6 drives the bottom end of the bass boost circuit. At full volume, the amplitude and phase of the output of T6 and T8 are the same, so the signal is the same on each end of the bass boost circuit, that means no filtering takes place and the frequency response is flat. As the volume is turned down, current will flow through the diodes, and their resistance decreases. Due to the shunting effect of resistor R34 and capacitor C25, diodes D6 and D7 start reducing the signal before D8 and D9. This means smaller input to T5 and thus smaller output from T6. Since the signal over the bass boost is now different, the higher frequencies will be cut, thus giving the desired bass boost. As the volume control is turned down more, more current will flow through the diodes, D8 and D9 will start to conduct. This in turn will reduce the input to T7 and thus the output of T8, hereby reducing the total volume.

The bass boost will continue throughout the entire volume range, because D6 and D7 will always conduct more current than D8 and D9. Diode D5 is to turn off the AVC, thus achieving complete turn off of the amplifier with minimum volume. T9 is an emitter-follower to match the low impedance of the next stage. With volume control, the volume of both channels can be adjusted together. There are 2 switches each having 3 positions for adjusting the treble and bass.

3. PHASE SPLITTER AND OUTPUT STAGE (PLATE III S)

The signal from T9 goes over amplifier T10 to the complementary pair phase splitters T11 and T12, these drive the transformerless push-pull output pair T13 and T14. The thermistor HL1 in base of T11 and T12 gives the circuit good thermal stability. Fine control P3 keeps both drivers symmetrical, and P4 adjusts the rest current (nosignal) of the output stage.
The overload protection is determined by the emitter current of the output stage. The voltage over R65, created by the emitter current flowing through it, is coupled to T15 over an integrating network with a time constant of 1 sec. When T15 starts conducting, the base of T16 becomes positive, thus placing point A in plate 1 at ground potential. This point is the voltage supply of the input stage. The audio signal is hereby completely cut-off. When the record rejects, the muting relay is energized. One of the muting contacts will bring the collector of T15 and the base of T16 back to negative, driving these transistors in cut-off, this on condition that the overload is removed from the circuit. In the muted state, the base of T10 is to ground over contacts S2 and S4, and the ground line to diode D3 is open over contacts S1 and S3.

SPECIFICATIONS

Electrical Dates:

Line Voltage	117 V. AC 60 cycles
Working Voltage	30 V. DC
Power: standby	70 W.
transfer and scan	105 W.
play	120 W.

Control Center:

1 Transformer for working voltage	117 V. AC prim. 80/110/125 V. AC sec. I 30 V. AC sec. II
1 Transformer for amplifier	117 V. AC prim. 40 V. AC sec.

Fuses:

1 Line Voltage 117 V. AC	3 3/10 Amp. slo blo
1 Amplifier	1 3/10 Amp. slo blo
1 Working Voltage	2 Amp. slo blo
1 Accessoires connection (AMP)	as needed
1 Electronic fuse	in the amplifier

Lighting:

1 Fluorescent lamp	F 30 T 8 30 W./33
1 Starter	FS — 4
1 Baliast	117 V./30 W./0.65 Amp.
2 Credit lights	24 V./ 3 W.
1 Safety lamp in Credit unit	24 V./15 W.
26 Indicator lamps (miniature GE 19)	12 V./0.1 Amp.

Credit Unit:

Credits	adjustable from 1 to 12 credits. (See note inside the lid)
Accumulation possible	up to 40 credits

Selection Circuit:

20 Letter buttons A — V	2 sets of switches, each 10 × 2 contacts
6 Number buttons 1 — 6	1 set of switches with 6 × 3 contacts
1 Latch bar solenoid	30 V. DC 100 % ED
1 Selection motor	30 V. AC
4 Cam switches N 1 — N 4	radio-shielded
1 Magnetic core memory unit	120 cores
ALBUM-selection	Adjustment see note in credit unit lid

Playing Mechanism:

1 Carriage base
with pre-selector unit and record magazine for 60 records alternatively 45 rpm or 33⅓ rpm, 7 inch diameter, mono or stereo, vertically located.

1 Popularity meter	60 counting strips
1 Total play meter	4 digits
1 Carriage with play motor (synchronous)	80/125 V. AC 15/33 W. 1500 rpm, left and right hand turns.
1 Clutch solenoid	125 V. AC 100 % ED
1 Trip solenoid	30 V. DC 5 % ED
1 Cartridge	ceramic DB 200 stereo/mono
2 Needles	diamond D 102 stereo/mono

Amplifier:

Stereo amplifier 70 S	with electronic fuse
Volume compensator	automatic (AVC)
Output stage	2 × 2 N 30 55 in push-pull
Output capacity per channel	60 W. music
Impedance	4 Ohms output
Muting relay	40 V. DC
1 (Remote-) volume control	volume control for both channels and one reject button
2 Woofers 10 inches	8 Ohms 10 W.
2 Tweeters DKS 6/13/100 pressure chamber system	4 Ohms 6 W.
1 Stereo network	1.5 mHy / 32 µF

Locks and Keys:

1 Cabinet locks	K 37 LG
2 Cabinet keys	
1 Cash box lock	A 46
2 Cash box keys	different numbers.

CONSUL 120

50 Cycles

SPARE PARTS LIST

PLEASE NOTE!

We recommend before using this Spare-Parts-List, that you carefully read the following instructions:

This illustrated Spare-Parts-List is recommended as a reference-list, and may be used for ordering the Spare-Parts-List for the NSM-Music Box

CONSUL 120

Each unit of built-in components has one or more pages on which all parts are illustrated.
Credit-unit, carriage and carriage base assy are being shown by means of explosive-drawings.
In the below shown lists are in the extreme left underneath "Position" the main numbers; these numbers refer to a group of parts which are separately illustrated. And slightly to the right are sub-numbers, these numbers coincide with the numbers in the drawings.

The letters L and M represent the continuation of a component list, whereby L designates the end of a list and M designates the start of the following page.

The second column of the table states the exact description of the parts, the third, the part numbers.
The dash (-) before the exact description of the parts is used to demonstrate the association of the parts.
A part with two dashes (--) belongs to the above part with one dash (-).
A part with three dashes (---) belongs to the above part with two dashes (--) etc.

The column on the extreme right refers to the number of times a part occurs in one unit.

This Spare-Parts-List refers only to the above specified NSM music-box type.
By each order of spare parts, we ask you, for you own interest to note the following:

1) Type of machine with serial number
2) Spare part number
3) Description of the part
4) Quantity of parts desired

Example of an order:

Consul 120 serial number . . . . . .
Part-number 23 077
Selector key
1 (ea)

Precise orders save unnecessary questions and bring the best results.

PLEASE ASK ONLY LÖWEN-AUTOMATEN FOR SPARE PARTS!

MODIFICATION BY TECHNICAL PROGRESS RESERVED

SPARE PARTS LIST

Cabinet - Consul 120 empty

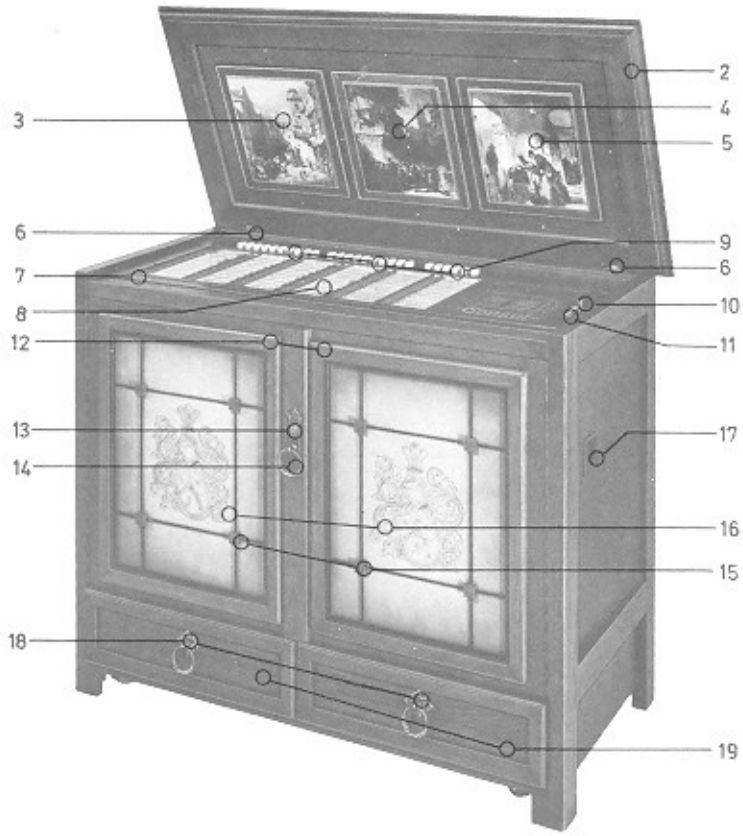

POSITION	DESCRIPTION	PART NUMBER	QTY
1	CABINET CONSUL 120 (EMPTY)	203125	1
2	-UPPER-LID	10200	1
	LEATHER INSERT	300155	1
3	--PAINTING	300158	1
4	--PAINTING	300156	1
5	--PAINTING	300157	1
6	--HINGE	201578	2
7	-PROGRAM LID ASSEMBLY	41798	1
8	--PROGRAM GLASS	204153	1
9	--BUTTON A-V/1-6	29064	
	--BUTTON A-V/1-6	29089	
10	--COIN REJECT	22641	1
	PLUNGER ASSEMBLY	41650	1
	SPRING	205265	1
11	--COIN ENTRY	200178	1
12	-FRONT DOORS (DAIRS ONLY)	10107	2
13	--DOOR-LOCK	207451	1
14	--RING HANDLE (ANTIC)	10116	1
15	--DOOR ORNAMENT	10109	2
16	--DOOR LEATHER INSERT	300102	2
17	-COIN RETURN CUP	41306	1
18	-DRAWER HANDLE	10117	2
19	-SPEAKER GRILL	207424	2
	PRESSURE CHAMBER SYSTEM	224092	2
	TWEETER HORN	202000	2
	SPEAKER GRID	23304	2
	SPEAKER SCREEN	207462	2
	LOUDSPEAKER P 245	224094	2
	CROSSOVER	41657	1

SPARE PARTS LIST

Cabinet - Consul 120

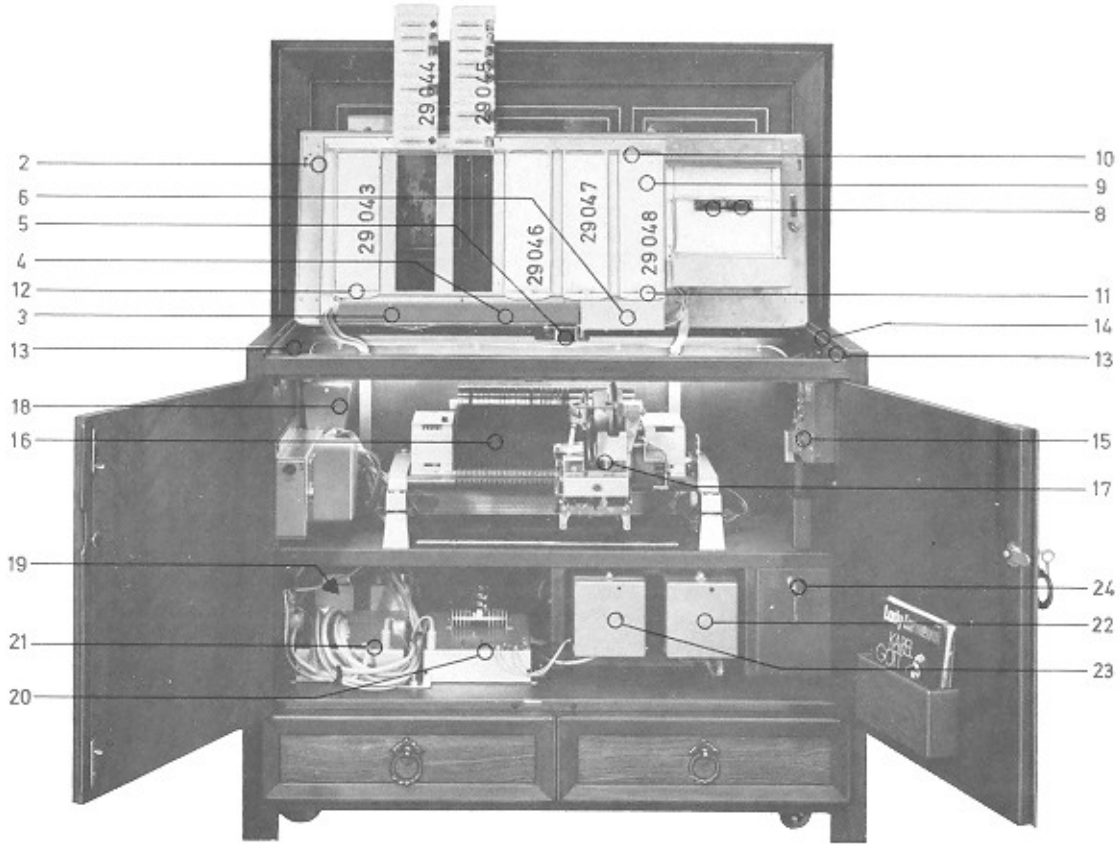

POSITION	DESCRIPTION	PART NUMBER	QTY
1	CABINET CONSUL 120 SEE PAGE B 000		
2	-PROGRAM LID ASSEMBLY	41798	1
3	--SWITCH ASSY-LEFT (10 SWITCHES)	41638	1
4	--SWITCH ASSY-MIDDLE (10 SWITCHES)	41637	1
5	--LATCH BAR SOLENOID	223185	1
6	--SWITCH ASSY-RIGHT (6 SWITCHES)	41636	1
7	--INDICATOR ASSEMBLY	41799	1
	BULBS NR.19 GE 12 V 0.1A	226036	26
8	--CREDIT LIGHT HOLDERS ASSEMBLY	41588	2
	BULBS 24 V 3 W	226028	2
9	--TITLE STRIP HOLDERS	29043	1
	--TITLE STRIP HOLDERS	29044	1
	--TITLE STRIP HOLDERS	29045	1
	--TITLE STRIP HOLDERS	29046	1
	--TITLE STRIP HOLDERS	29047	1
	--TITLE STRIP HOLDERS	29048	1
10	--ROD	23288	1
11	---LATCH ROLL	29041	6
12	---SPRING	205264	6
13	--CLOSING RACK	23276	2
	ROLL	23277	2
	TORSION SPRING, LEFT	205377	1
	TORSION SPRING, RIGHT	205378	1
14	-PLUNGER ASSEMBLY	41592	2
15	-COIN MECHANISM SEE PAGE M 000		
16	-CARRIAGE BASE SEE PAGE G 000		
17	-CARRIAGE SEE PAGE L 000		
18	-VOLUME CONTROL SEE PAGE R 000		
	OUTSIDE FRAME	29061	1
	SPACER	23247	2
	INSIDE FRAME	23248	1
	BACKPLATE	23249	1
18L	CONTINUED 1		

SPARE PARTS LIST

Cabinet - Consul 120

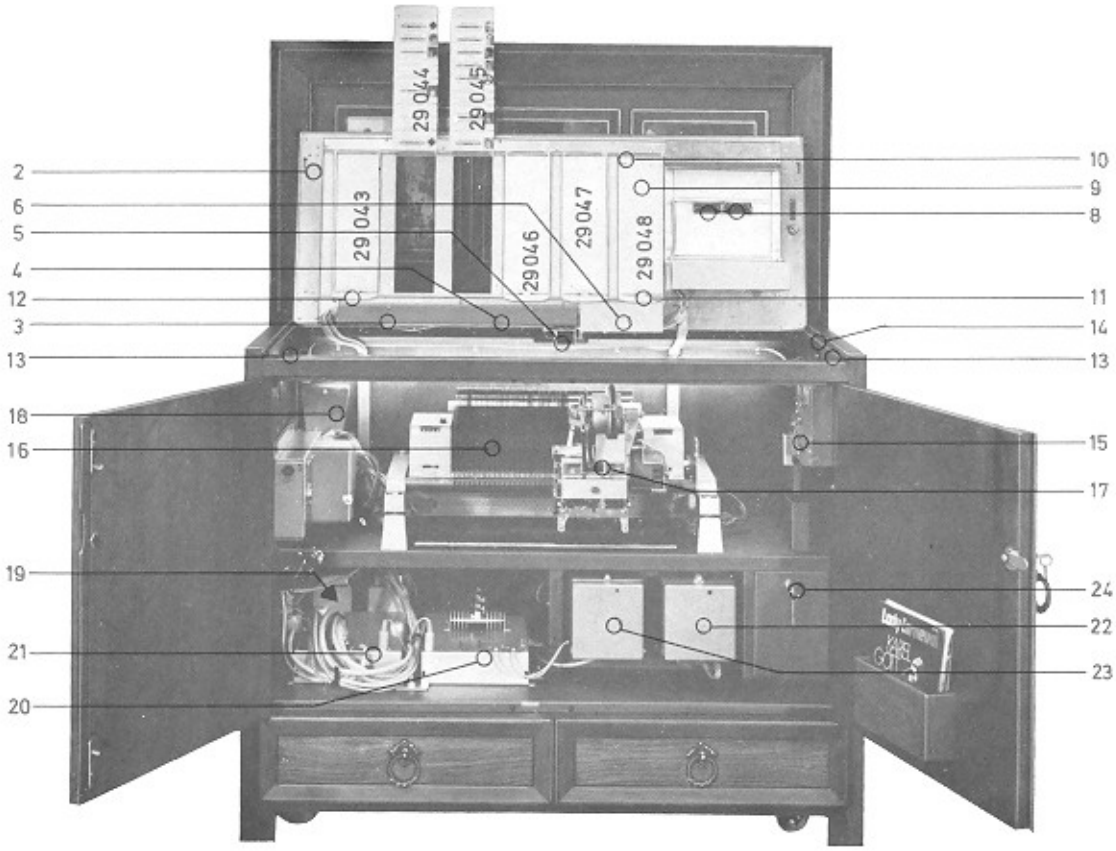

POSITION	DESCRIPTION	PART NUMBER	QTY	
18M	CONTINUED 1			
19	-JUNCTION PLATE ASSEMBLY	41658	1	
20	ALTERNATIVE :			
	-STEREO-AMPLIFIER 70 S SEE PAGE VS 000			
	-MONO-AMPLIFIER 35 M SEE PAGE VM 000			
21	-CONTROL CENTRE 220/50 SEE PAGE S 000			
22	-CREDIT UNIT 40/I SEE PAGE K 000			
23	-OUTPUT TRANSFORMER	41622	1	
24	--CASH BOX LOCK	207452	1	
	FLUORESCENT LIGHT	226033	1	
	SOCKET	225241	1	
	SOCKET FOR STARTER	225240	1	
	STARTER FOR 30 W	225040	1	
	BALLAST	224080	1	

SPARE PARTS LIST

Carriage Base - Consul 120

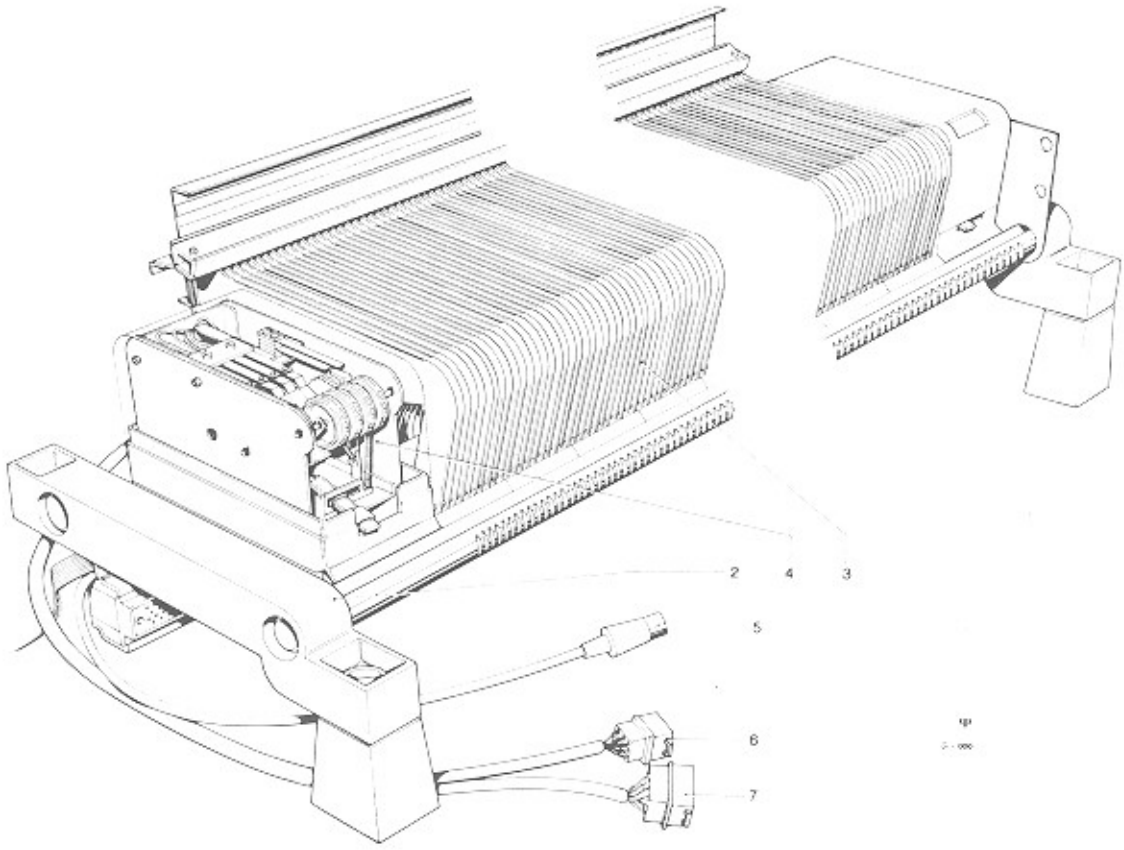

POSITION	DESCRIPTION		PART NUMBER	QTY	
1	CARRIAGE BASE CONSUL 120				
2	-CARRIAGE BASE	SEE PAGE G 100			
3	-MAGAZINE	SEE PAGE G 200			
4	-SCAN CONTROL BOX	SEE PAGE G 300			
5	-PLUG MAS 300		225062		
6	-AMP PLUG 9 PRONG BLUE		23022		
7	-AMP PLUG 12 PRONG WHITE		225183		

SPARE PARTS LIST

Carriage base 120

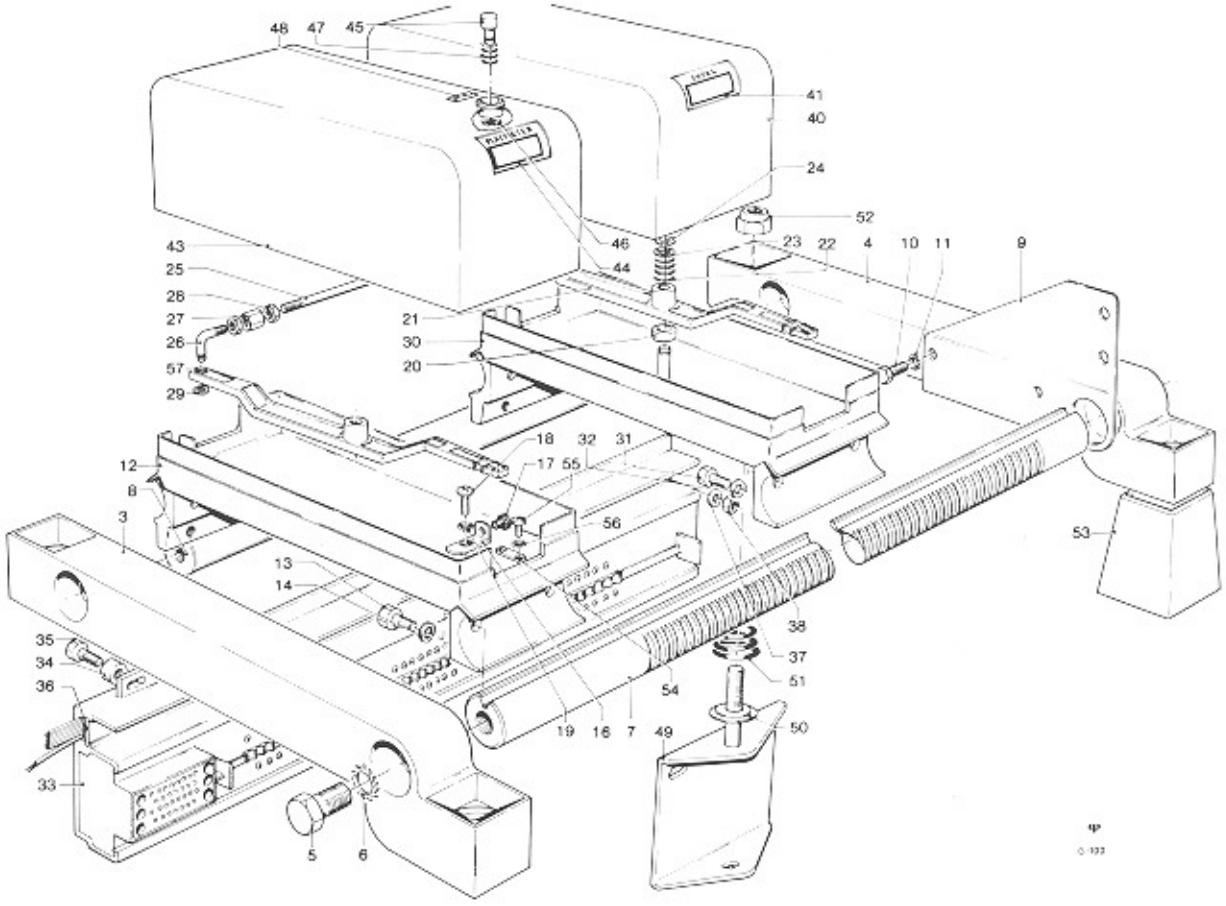

POSITION		DESCRIPTION	PART NUMBER	QTY
1		CARRIAGE BASE		
2		-CARRIAGE BASE ASSEMBLY	41595	1
	3	--CONNECTING BRACKET, LEFT	200253	1
	4	--CONNECTING BRACKET, RIGHT	200258	1
	5	--SCREW M 10X15 DIN 933		4
	6	--LOCKWASHER 10		4
	7	--GEAR RACK	23282	1
	8	--CONNECTING BAR	23283	1
	9	--ENDPLATE	23170	1
	10	--SCREW M 8X15 DIN 933		2
	11	--LOCKWASHER 8		2
	12	--BRACKET	200254	1
	13	--SCREW M 8X15 DIN 933		4
	14	--WASHER 8,4 DIN 433		4
15		--L-BRACKET ASSEMBLY		2
	16	---L-BRACKET	23065	2
	17	---BUMPER	207095	2
	18	--SCREW M 5X8 DIN 7985		2
	19	--LOCKWASHER 5		2
	20	--SPACER	23224	1
	21	--SWITCH LEVER	200257	1
	22	--PRESSURE SPRING	205351	1
	23	--WASHER 6,2X10X0,2		1
	24	--E-WASHER 5 DIN 6799		1
	25	--CONNECTING ROD, LONG	23289	1
	26	--CONNECTING ROD, SHORT	23237	1
	27	--ADJUSTING NUT	23236	1
	28	--LOCKING NUT BM 3 DIN 439		2
28L		CONTINUED 1		

SPARE PARTS LIST

Carriage base 120

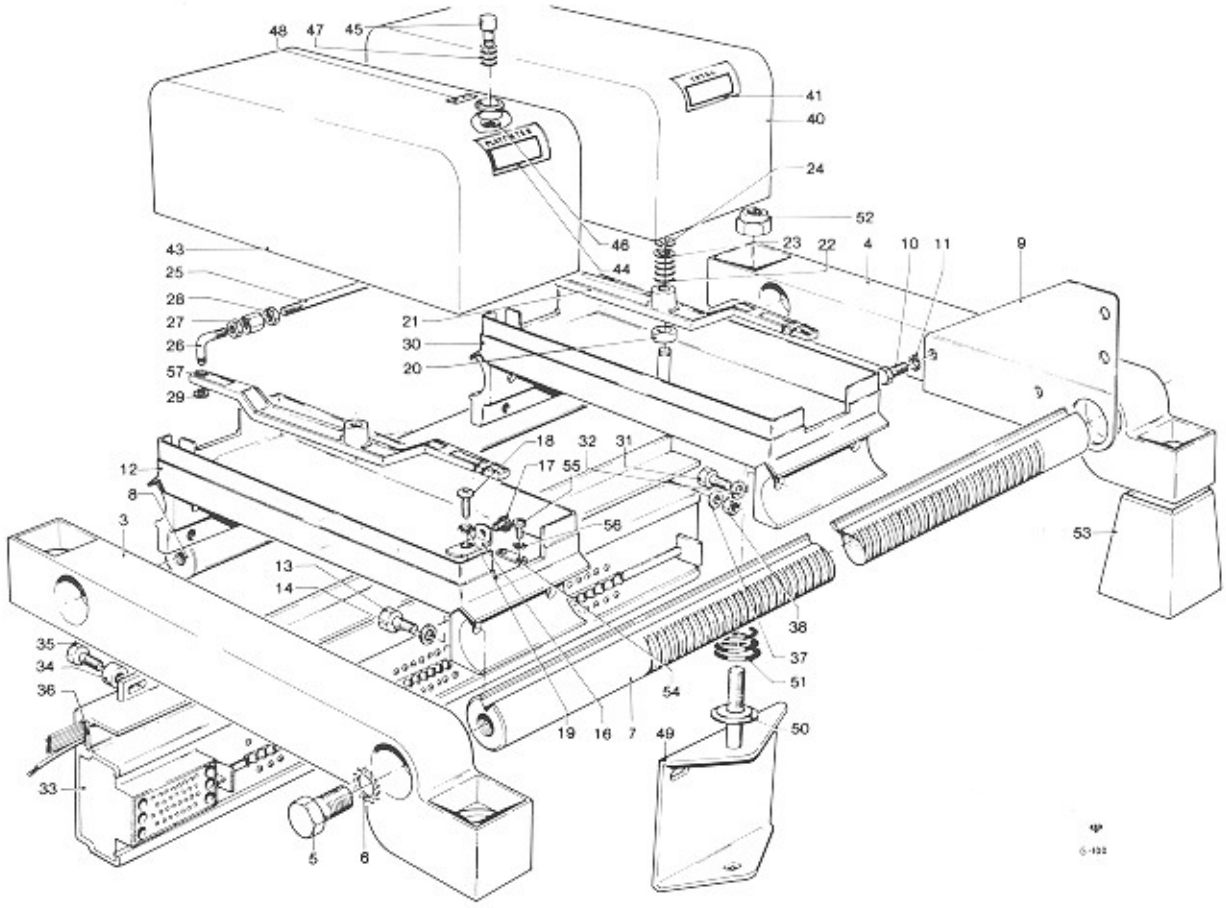

POSITION	DESCRIPTION	PART NUMBER	QTY
28M	CONTINUED 1		
29	--E-WASHER 2,3 DIN 6799		2
30	--BRACKET ASSEMBLY, RIGHT	41459	1
31	--SCREW M 8X15 DIN 933		4
32	--WASHER 8,4 DIN 433		4
33	--MEMORY UNIT ASSEMBLY	41604	1
34	--SPACER	23226	4
35	--SCREW M 5X20 DIN 931		4
36	--CONTACT PLATE WITH HARNESS	41598	1
37	--WASHER 5,3 DIN 433		1
38	--NUT BM 5 DIN 439		1
39	--COVER ASSEMBLY, RIGHT		1
40	---COVER	200255	1
41	---WINDOW	215360	1
42	--COVER ASSEMBLY, LEFT	41488	1
43	---COVER	200259	1
44	---WINDOW	215359	1
45	---SCAN BUTTON	29034	1
46	---E-WASHER 3,2 DIN 6799		1
47	---PRESSURE SPRING	205340	1
48	---LABEL	215350	1
49	--SUPPORT BRACKET ASSEMBLY	41553	2
50	--WASHER	202815	4
51	--CONESPRING	205353	4
52	--NUT M 10 DIN 985		4
53	--STAND	200256	2
54	--LOCKING PLATE	23064	1
55	--SCREW M 5X8 DIN 7985		1
56	--LOCKWASHER 5		1
57	-SWITCH LEVER SEE PAGE G 300		

SPARE PARTS LIST

Magazine

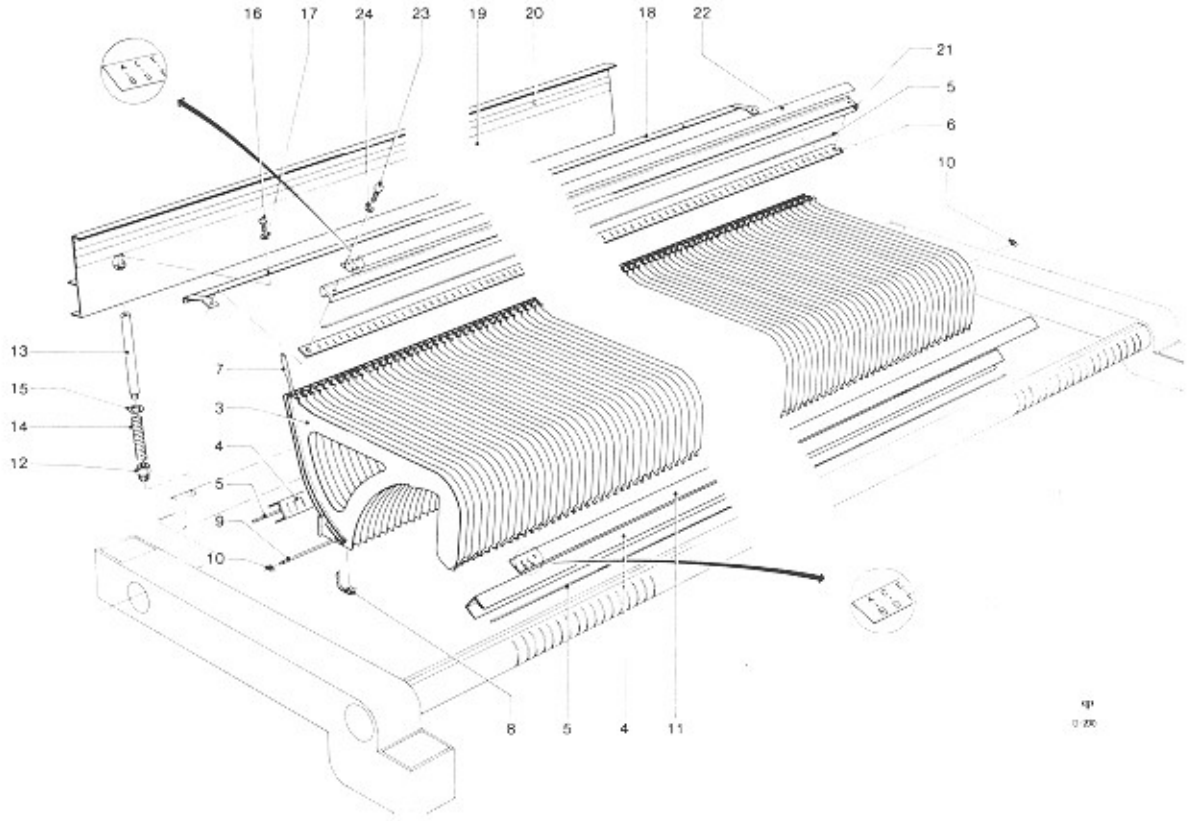

POSITION	DESCRIPTION	PART NUMBER	QTY
1	MAGAZINE		
2	-MAGAZINE ASSEMBLY		1
3	--DIVIDER	29058	61
4	--DIVIDER FRAME	29296	2
5	--WIRE ROD	23285	3
6	--SPACING PLATE	23284	1
7	--POPULARITY INDICATOR	29059	60
8	--INDICATOR LEVER	29060	60
9	--PIVOT ROD	23286	1
10	--E-WASHER 1,9 DIN 6799		2
11	--NUMBER STRIP	215101	1
12	-NUT SCREW	23231	2
13	-GUIDE PIN	23230	2
14	-PRESSURE SPRING	205339	2
15	-WASHER 8,2X12X0,4		2
16	-SCREW M 4X6 DIN 7985		2
17	-WASHER 4,3 DIN 125		2
18	-CONNECTING ANGLE	41596	1
19	-POPULARITY PROFILE	200326	1
20	-SCALE STRIP	215102	1
21	-NUMBER STRIP PROFILE	200325	1
22	-NUMBER STRIP	215103	1
23	-SCREW AM 3X15 DIN 7985		2
24	-WASHER 3,2 DIN 125		2

SPARE PARTS LIST

Carriage base with Selector control

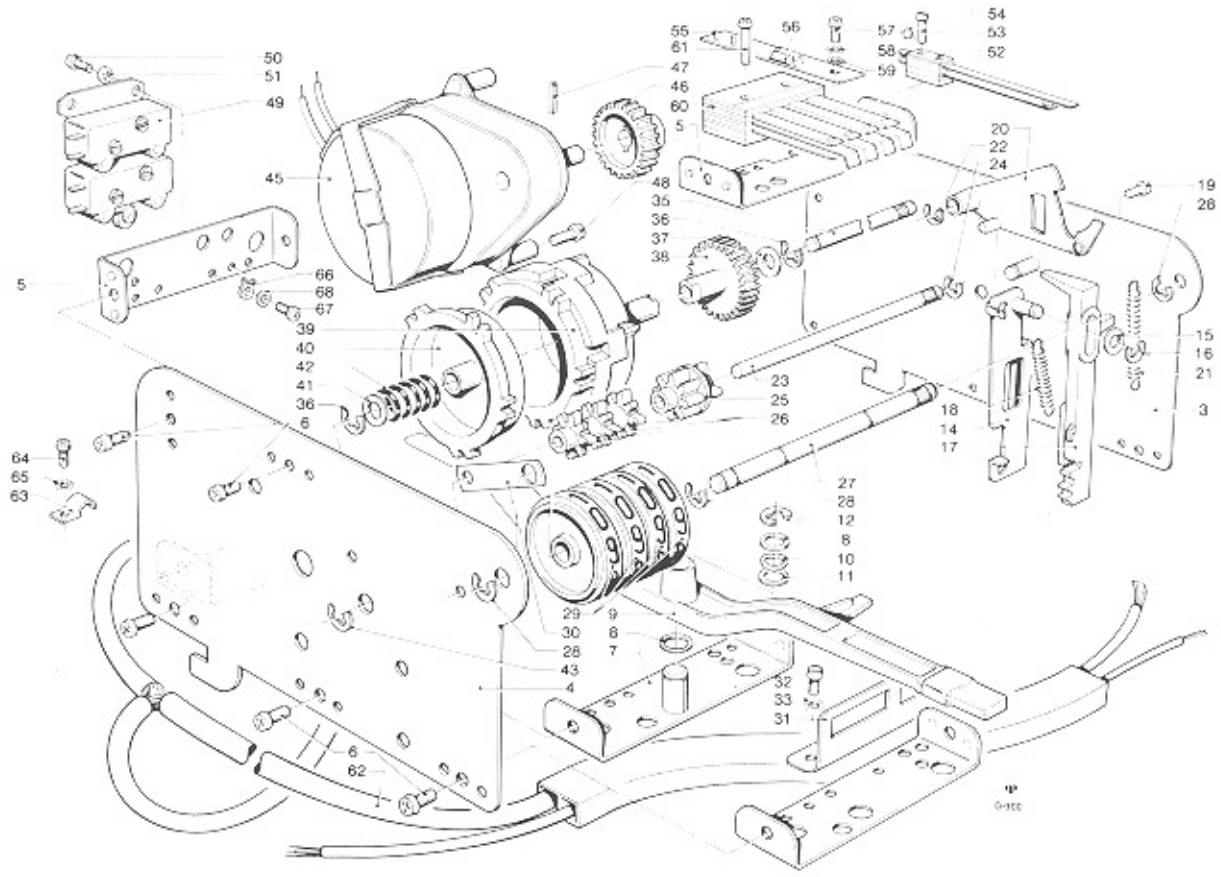

POSITION	DESCRIPTION	PART NUMBER	QTY
1	SCAN CONTROL		
2	-SCAN CONTROL BOX ASSEMBLY	41611	1
3	--PLATE, STAMPED	41456	1
4	--PLATE	23054	1
5	--U-BRACKET	23051	4
6	--SCREW AM 3X4 DIN 7985		10
7	--U-BRACKET, STAMPED	41457	1
8	--WASHER 6,2X10X0,2		2
9	--SWITCH LEVER	200257	1
10	--BEARING WASHER 9,8X6,2X0,2		1
11	--WASHER 6,2X11X0,5		1
12	--E-WASHER 4 DIN 6799		1
13	--STEP SWITCH ASSEMBLY	10163	1
14	---BRACKET, STAMPED	41458	1
15	---WASHER 6X3,1X0,2		1
16	---E-WASHER 2,3 DIN 6799		1
17	---STEP LEVER	202687	1
18	---TENSION SPRING	205328	1
19	--SCREW AM 3X5 DIN 7985		2
20	--PAWL ASSEMBLY	41484	1
21	--TENSION SPRING	205327	1
22	--E-WASHER 3,2 DIN 6799		1
23	--SHAFT	23068	1
24	--E-WASHER 1,9 DIN 6799		2
25	--STEP GEAR	202686	1
26	--DRIVE GEAR	202685	3
27	--SHAFT	23067	1
28	--E-WASHER 3,2 DIN 6799		6
29	--NUMBER DISC	202684	4
30	--SHAFT PLATE	23066	1
31	--GUIDE PLATE	23052	2
32	--SCREW M 3X4 DIN 84		4
33	--LOCKWASHER 3		4
33L	CONTINUED 1		

SPARE PARTS LIST

Carriage base with Selector control

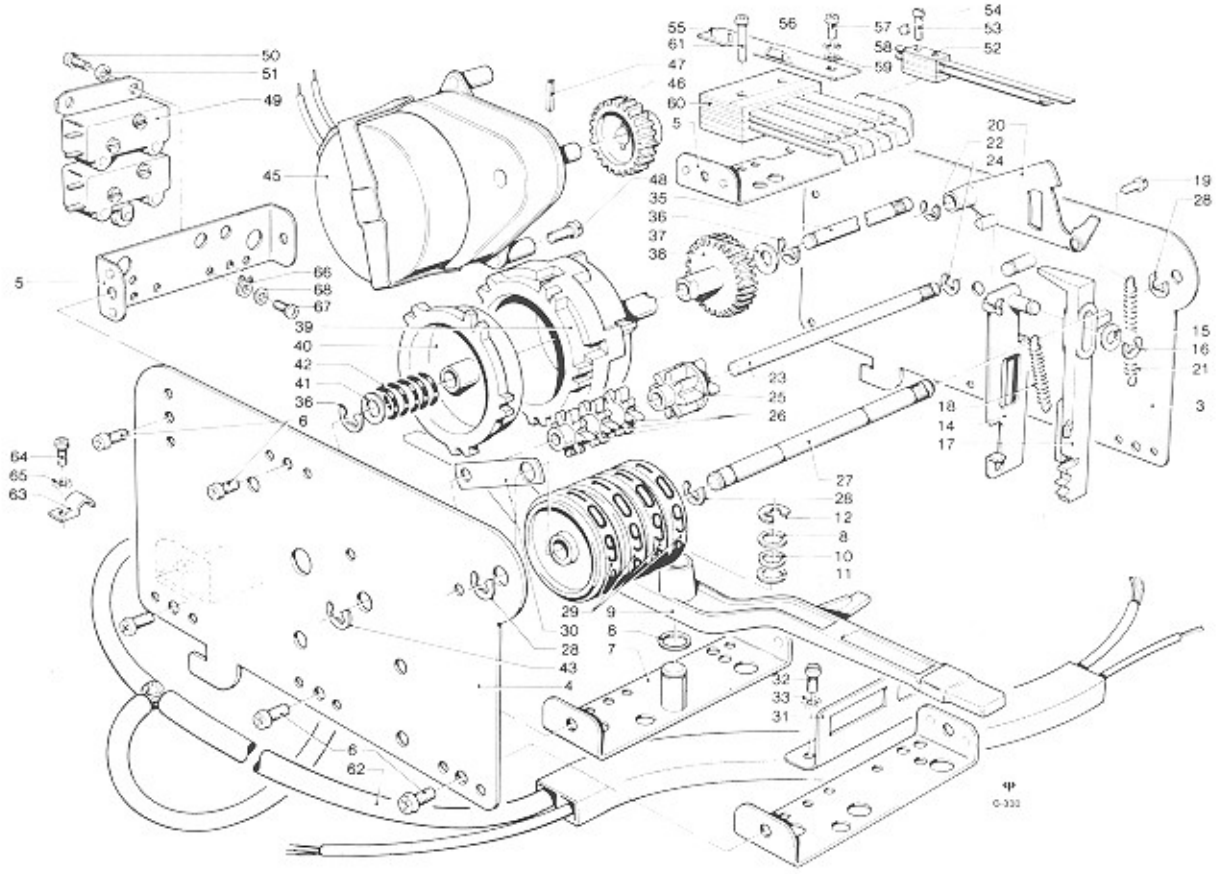

POSITION	DESCRIPTION	PART NUMBER	QTY
33M	CONTINUED 1		
34	--CAM ASSEMBLY	10162	1
35	---SHAFT	23067	1
36	---E-WASHER 3,2 DIN 6799		4
37	---WASHER 4,3X8X0.2		1
38	---WING GEAR	202689	1
39	---CAM I	202680	1
40	---CAM DISC II	202681	1
41	---WASHER 4,3X11X0,5		1
42	---PRESSURE SPRING	205329	1
43	--E-WASHER 3,2 DIN 6799		1
44	--SELECTION MOTOR ASSEMBLY	41460	1
45	---MOTOR, STAMPED	41460	1
46	---GEAR	202688	1
47	---DRIVE PIN 1,5X8 DIN 1481		1
48	--SCREW AM 3X6 DIN 7985		2
49	--MICRO SWITCH ASSEMBLY	222196	1
50	--SCREW AM 3X5 DIN 7985		2
51	--WASHER 3,1X6,7X1		2
52	--SWITCH BLADE ASSEMBLY	222194	1
53	--SCREW AM 2,3X15 DIN 84		2
54	--VARISTOR E299 DD/P 344	221103	1
55	--CONNECTION PLATE, ASSEMBLED	207409	1
56	---DIODE 1N 4004	221115	1
57	--SCREW AM 3X5 DIN 7985		1
58	--LOCKWASHER 3		1
59	--WASHER 3,2 DIN 125		1
60	--SWITCH BLADE ASSEMBLY	222191	1
61	--SCREW AM 3X15 DIN 7985		2
62	--HARNESS	41610	1
63	--CABLE CLAMP 7 Ø	229010	1
64	--SCREW AM 4X4 DIN 7985		1
65	--LOCKWASHER 4		1
66	--SOLDER LUG L 690 B/3,2	229079	1
67	--SCREW AM 3X4 DIN 7985		1
68	--WASHER 3,1X6,7X1		1

SPARE PARTS LIST

Credit unit 40/I

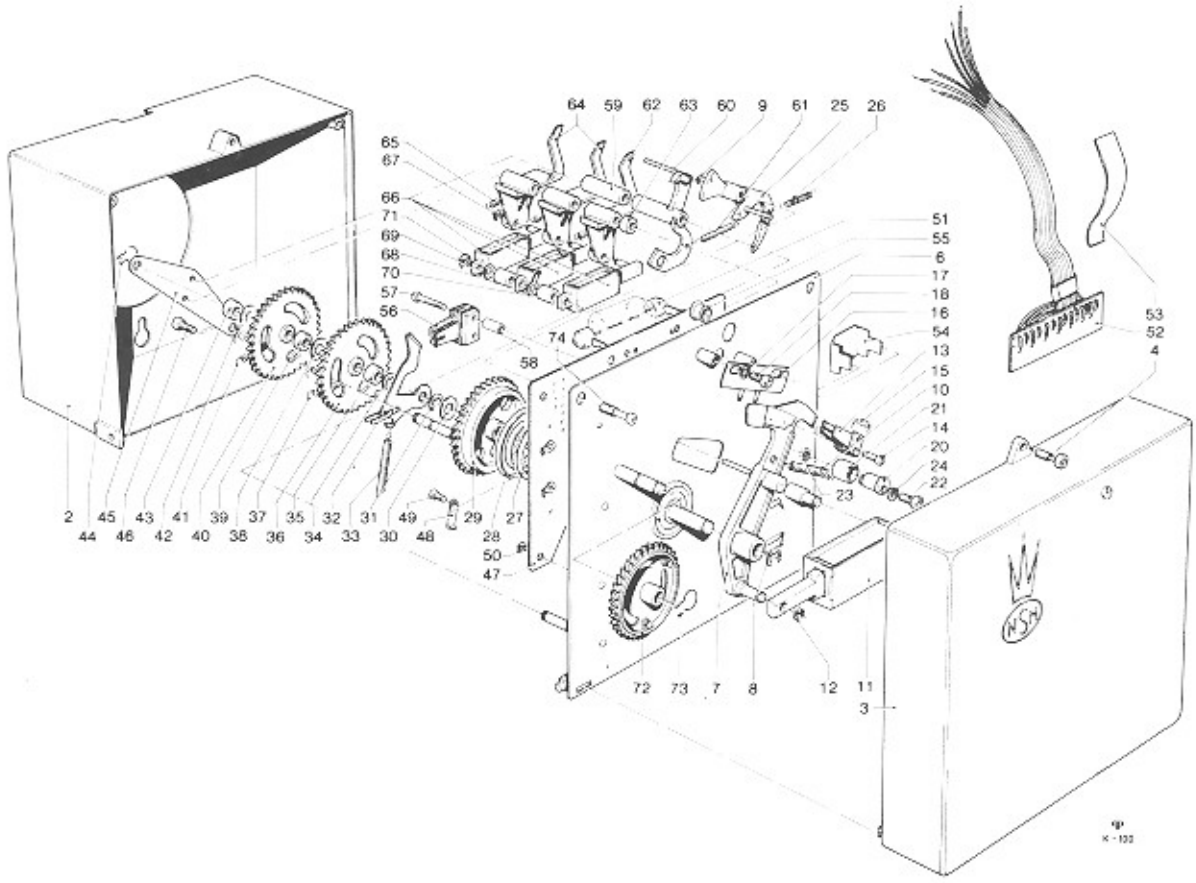

POSITION		DESCRIPTION	PART NUMBER	QTY	
1		CREDIT UNIT 40/I	41522	1	
	2	-HOUSING	202927	1	
	3	-COVER ASSEMBLY	202776	1	
	4	--SCREW BM 4X15X5 DIN 7986		1	
5		-BASE PLATE ASSEMBLY		1	
	6	--BASE PLATE, STAMPED	41534	1	
	7	-SUBTRACT LEVER ASSEMBLY	41548	1	
	8	--E-WASHER 3,2 DIN 6799		1	
	9	--E-WASHER 1,9 DIN 6799		1	
	10	-TENSION SPRING FOR SUBTRACTION	205344	1	
	11	-SUBTRACT SOLENOID ASSEMBLY	223190	1	
	12	--E-WASHER 3,2 DIN 6799		2	
	13	-CARRY OVER SWITCH ASSEMBLY	222224	1	
	14	-SCREW M 2,3X14 DIN 84		2	
	15	-DIODE 1N 4004	221115	1	
	16	-WRITE-IN TRIGGER SWITCH ASSY	41549	1	
	17	-WASHER 3 DIN 433		2	
	18	-SCREW AM 3X5 DIN 7986		2	
19		-ECCENTRIC ASSEMBLY		1	
	20	--ECCENTRIC	29052	1	
	21	--RUBBER	207416	1	
	22	-SCREW AM 3X12 DIN 7986		1	
	23	-LOCKWASHER 3		1	
	24	-SPRING WASHER A 3 DIN 127		1	
	25	-SUBTRACT PAWL ASSEMBLY	41547	1	
	26	-TENSION SPRING FOR SUBTRACT PAWL	205347	1	
	27	-SPACER	23301	1	
	28	-TORSION SPRING	205352	1	
	29	-CREDIT WHEEL II ASSEMBLY	41541	1	
	30	-WASHER 4,2X11X0,2		1	
	31	-E-WASHER 3,2 DIN 6799		1	
	32	-SINGLE ALBUM SWITCH CONTACT LEVER	41544	1	
	33	-TENSION SPRING	205348	1	
	34	-E-WASHER 3,2 DIN 6799		1	
	35	-SPACER	29054	1	
	36	-CREDIT WHEEL III ASSEMBLY	41542	1	
	37	-TENSION SPRING	205278	1	

37L CONTINUED 1

Credit unit 40/I

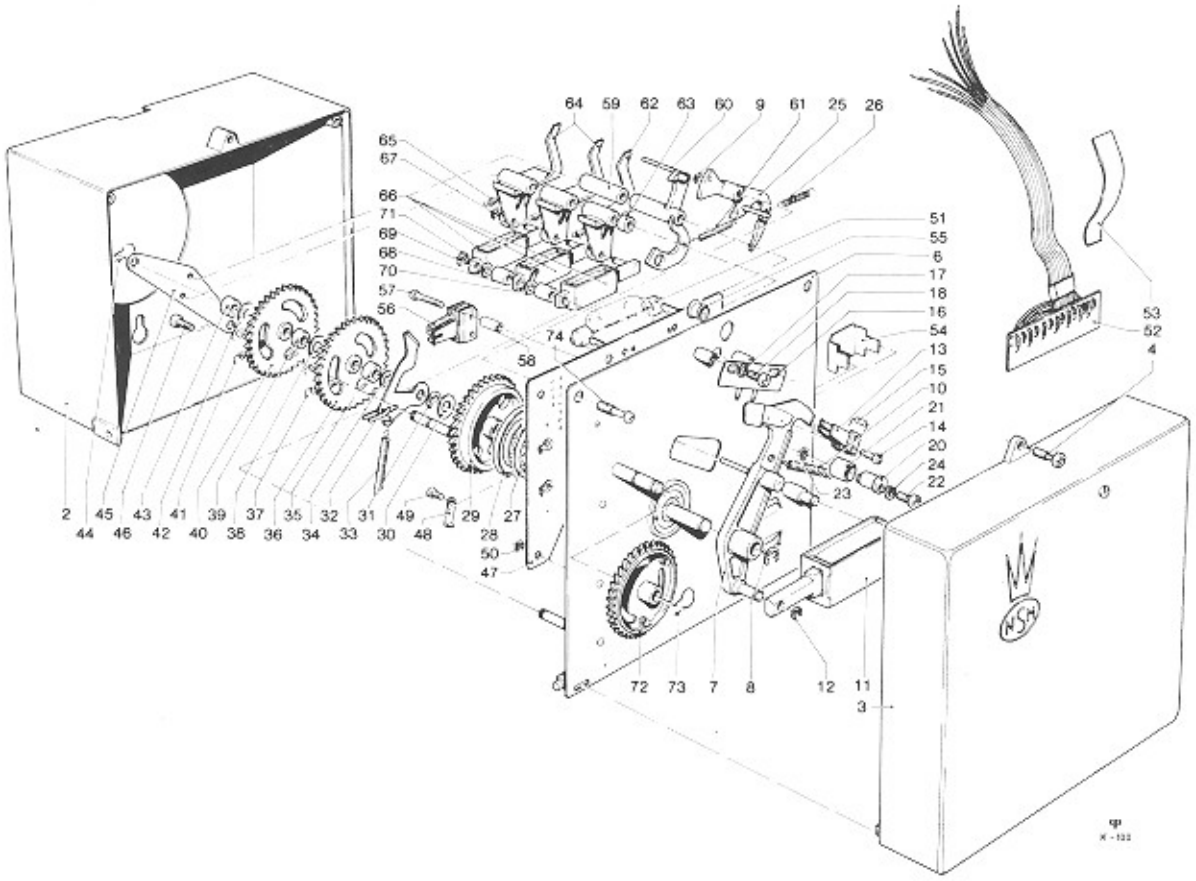

POSITION	DESCRIPTION	PART NUMBER	QTY
37M	CONTINUED 1		
38	-WASHER 4,2X11X0,2		1
39	-SPACER	29053	1
40	-CREDIT WHEEL IV ASSEMBLY	41543	1
41	-TENSION SPRING	205278	1
42	-WASHER 4,2X11X0,2		1
43	-SPACER	29053	1
44	-CLIP	205256	1
45	-CENTERING PLATE	23166	1
46	-SCREW AM 3X5 DIN 7986		1
47	-CONTACT PLATE FOR SINGLE ALBUM SWITCH	207406	1
48	-CONTACT JUMPER	10021	2
49	-SCREW M 3X4 DIN 7986		2
50	-E-WASHER 2,3 DIN 6799		3
51	-LAMP 24 V 18 W	226037	1
52	-HARNESS ASSEMBLY	41552	1
53	-HARNESS PROTECTOR	23198	1
54	-CABLE CLAMP	229096	1
55	-GROMMET	28005	1
56	-CREDIT SWITCH ASSEMBLY	222223	1
57	-SCREW M 2,3X22 DIN 84		2
58	-SPACER	23197	2
59	-SPACER	29054	1
60	-STOP PAWL	202787	1
61	-TENSION SPRING FOR STOP PAWL	205345	1
62	-RELEASE PAWL ASSEMBLY	41546	1
63	-SPACER	29057	1
64	-RELEASE PAWL ASSEMBLY	41554	2
65	-TENSION SPRING FOR RELEASE PAWL	205346	3
66	-ADD SOLENOID ASSEMBLY	223191	3
67	-E-WASHER 2,3 DIN 6799		3
68	-SPACER	23196	2
69	-WASHER 4X6X0,5		1
70	-LUG L 804 B	229095	1
71	-E-WASHER 3,2 DIN 6799		1
72	-CREDIT WHEEL V ASSEMBLY	41550	1
73	-CLIP	205256	1
74	-SCREW BM 4X15X5 DIN 7986		2

SPARE PARTS LIST

Carriage

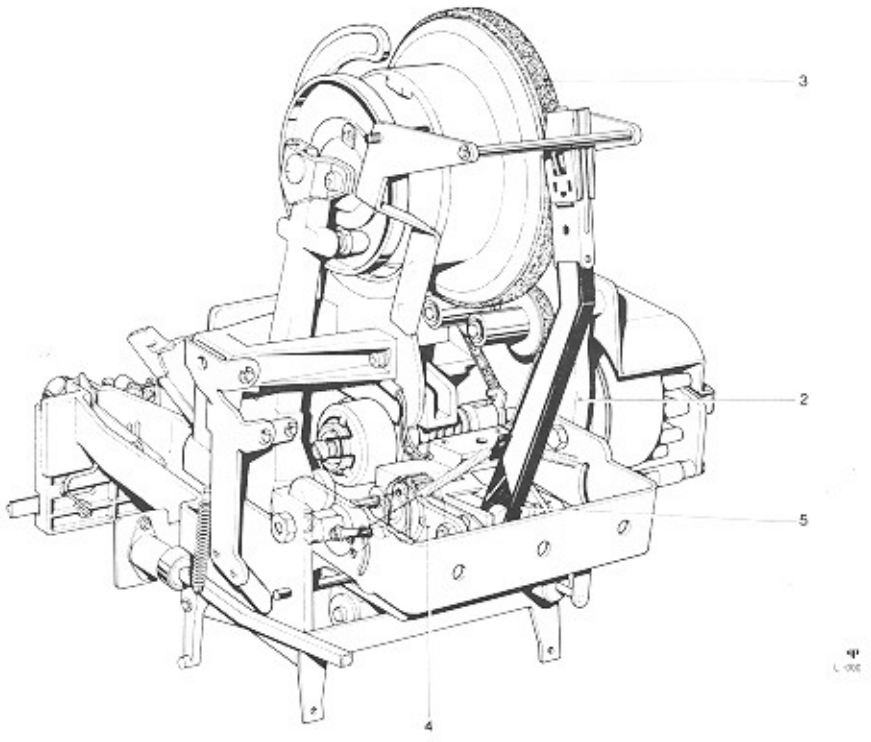

POSITION	DESCRIPTION		PART NUMBER	QTY	
1	CARRIAGE		41491	1	
2	-CARRIAGE FRAME	SEE PAGE L 100			
3	-CARRIAGE DRIVE	SEE PAGE L 200			
4	-TRANSFER AND TONE ARM DRIVE	SEE PAGE L 300			
5	-RECORD DRIVE AND TONE ARM	SEE PAGE L 400			

SPARE PARTS LIST

Carriage chassis

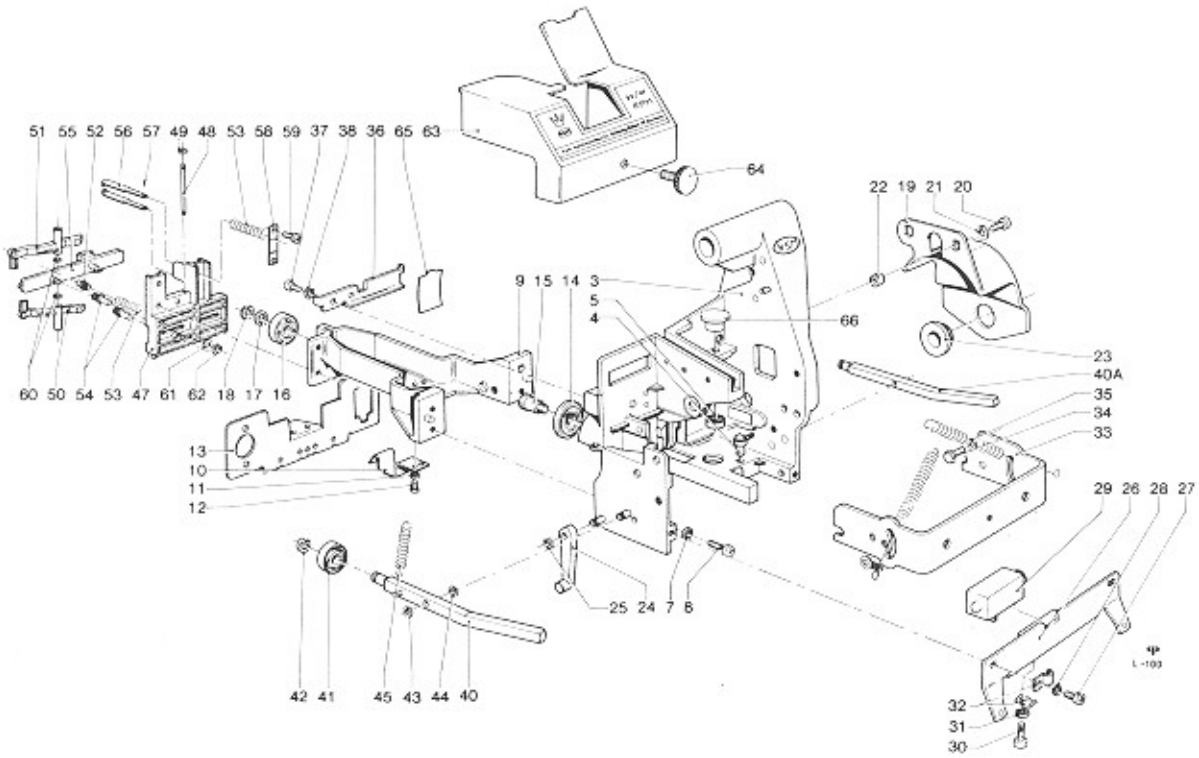

POSITION	DESCRIPTION	PART NUMBER	QTY
1	CARRIAGE		
2	-CARRIAGE CHASSIS ASSEMBLY	41482	1
3	--CHASSIS		1
4	---CONTACT ASSEMBLY	41345	1
5	---BALL BEARING EL 4	206023	1
6	--TRANSFER ARM HOUSING ASSY	41465	1
7	---LOCKWASHER 5		4
8	---SCREW AM 5X15 DIN 7985		4
9	---HOUSING	23078	1
10	---CABLE CLAMP	22540	1
11	---LOCKWASHER 3		2
12	---SCREW B 2,9X6,5 DIN 7981		2
13	---SOCKET HOLDER	23139	1
14	--BALL BEARING	206084	2
15	--SHOULDER SCREW	23147	2
16	--BALL BEARING EL 6 ZZ	206058	1
17	--WASHER 6,2X12,2X0,5		2
18	--E-WASHER 5 DIN 6799		1
19	--MOTOR BRACKET	22920	1
20	--SCREW AM 5X15 DIN 7985		2
21	--SPRING WASHER A 5 DIN 137		2
22	--SPACER	23269	2
23	--GROMMET, REAR	207348	1
24	--ECCENTRIC LEVER	29036	1
25	--E-WASHER 4 DIN 6799		1
26	--SUPPORT	41495	1
27	--SCREW AM 4X8 DIN 7985		2
28	--LOCKWASHER 4		2
29	--TRIP SOLENOID	223189	1
30	--SCREW AM 3X8 DIN 7985		2
31	--LOCKWASHER 3		2
32	--CABLE CLAMP NR. 6100a	229002	2
33	--PICK UP BRACKET	22848	1
34	--BOLT M 4X8 DIN 933		1
34L	CONTINUED 1		

SPARE PARTS LIST

Carriage chassis

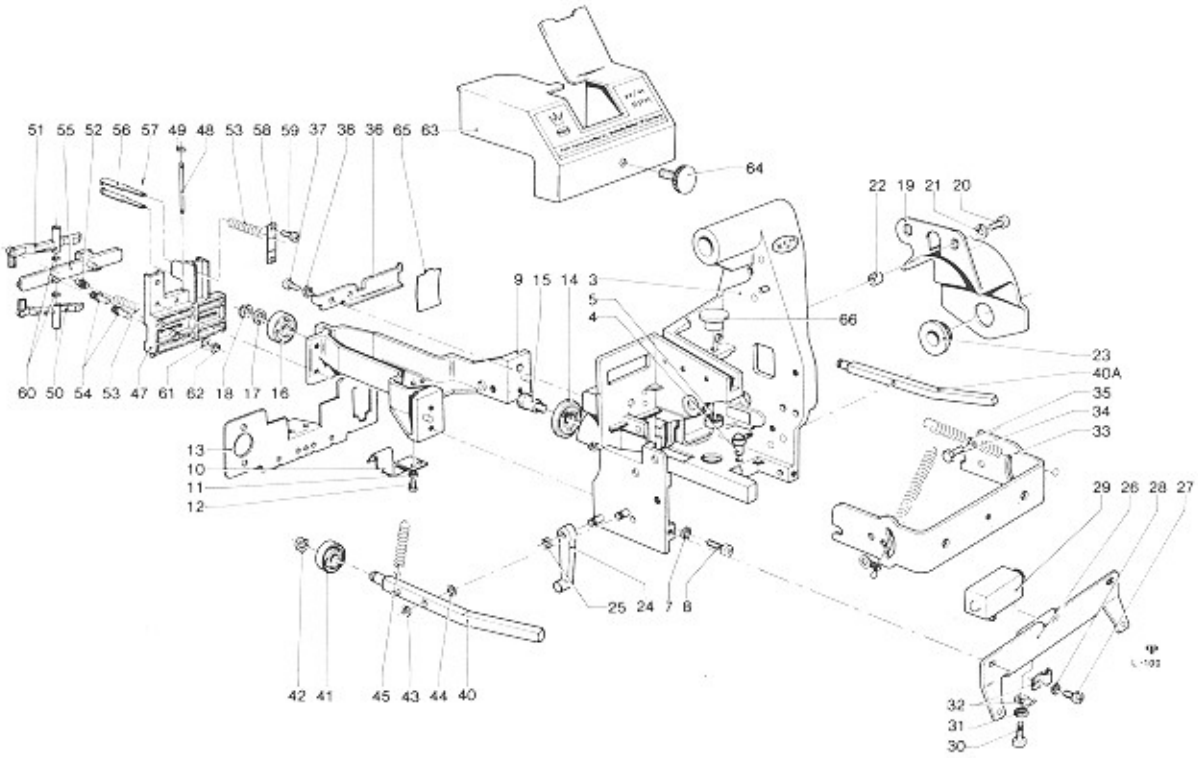

POSITION	DESCRIPTION	PART NUMBER	QTY
34M	CONTINUED 1		
35	--WASHER 4,3 DIN 125		1
36	--BRACKET	23135	1
37	--SCREW AM 4X8 DIN 7985		2
38	--LOCKWASHER 4		2
39	--LOCKING LEVER, LEFT ONLY	10158	1
39A	--LOCKING LEVER, RIGHT ONLY	10159	1
40	---LOCKING LEVER, LEFT STAMPED	41493	1
40A	---LOCKING LEVER, RIGHT STAMPED	41494	1
41	---BALL BEARING EL 6 ZZ	206058	2
42	---E-WASHER 5 DIN 6799		2
43	--E-WASHER 3,2 DIN 6799		2
44	--WASHER 4,3 DIN 433		2
45	--TENSION SPRING	205333	2
46	-READ OUT BLOCK ASSEMBLY		1
47	--HOUSING	202699	1
48	--SHAFT	23063	1
49	--E-WASHER 1,9 DIN 6799		2
50	--SENSING LEVER, LOWER	23266	1
51	--SENSING LEVER, UPPER	23267	1
52	--READ-OUT CONTACTS	201513	2
53	--SPRING	205324	4
54	--CONTACT PIN	201514	2
55	--SHIFTING SLIDE	41480	1
56	--CONTACT PLUNGER	201510	2
57	--LOCKING PIN 1X4 DIN 1481		2
58	--CONTACT PLATE	23059	1
59	--SCREW AM 2,6X5 DIN 7985		2
60	--WASHER 2,5X5X0,4		2
61	--WASHER 3,2X6X0,2		1
62	--E-WASHER 2,3 DIN 6799		1
63	-COVER ASSEMBLY	29030	1
64	-SHOULDER SCREW M 3X6 DIN 465		1
65	-INSULATION	201542	1
66	-PLASTIC PLUG	29013	1

SPARE PARTS LIST

Carriage drive

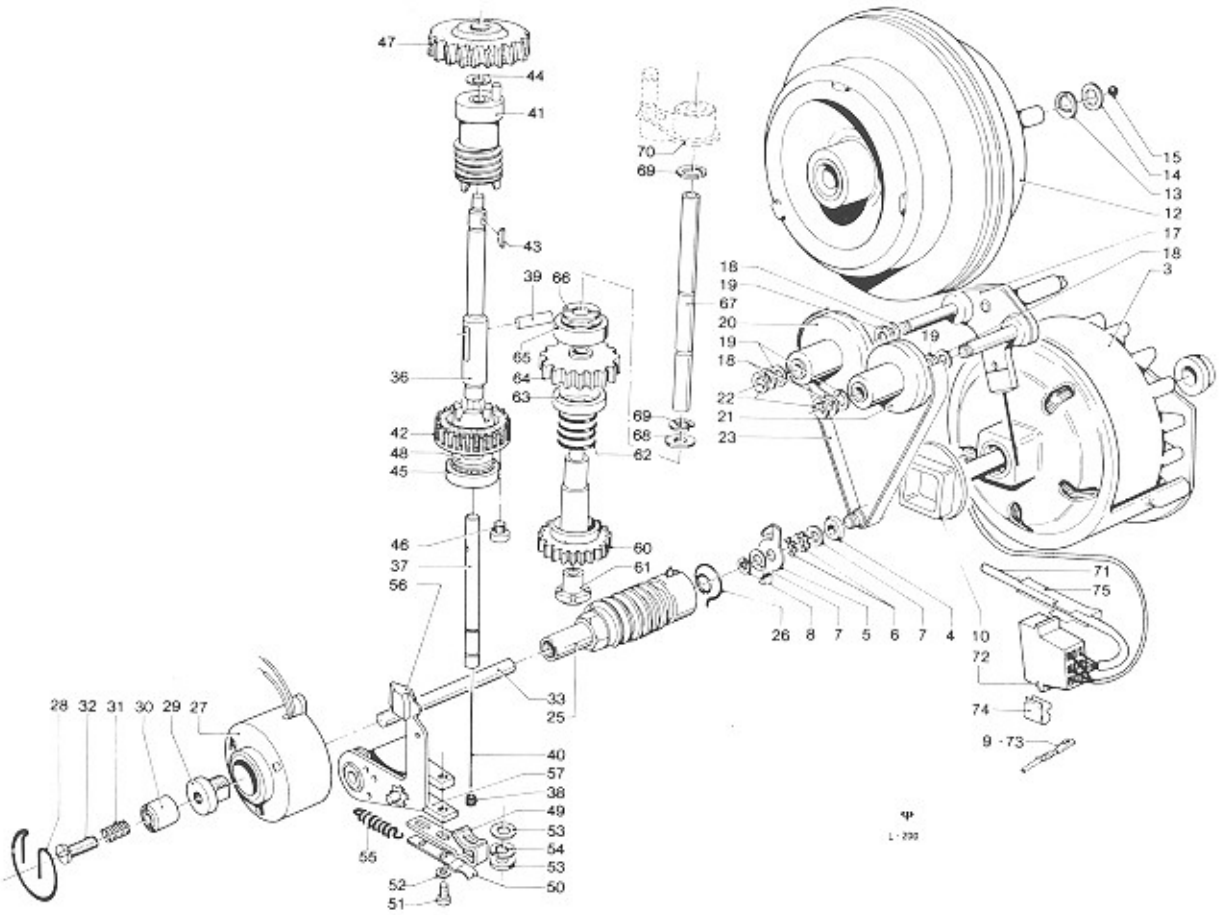

POSITION		DESCRIPTION	PART NUMBER	QTY
1		CARRIAGE DRIVE		1
2		-CARRIAGE MOTOR ASSEMBLY	41529	1
	3	--CARRIAGE MOTOR, ONLY	224093	1
	4	--SEAL RING	23018	1
	5	--BUTTERFLY CLUTCH	23043	1
	6	--SPRING WASHER	205119	2
	7	--WASHER 9,5X5H7X0,4		2
	8	--E-WASHER 4 DIN 6799		1
	9	--AMP-LOK CONTACT NR. 42859-2	222205	3
	10	-GROMMET FRONT	207347	1
11		-TURNTABLE DRIVE		1
	12	--TURNTABLE ASSEMBLY	41504	1
	13	--E-WASHER 7 DIN 6799		1
	14	--WASHER 8,3X12X0,2		1
	15	--STEEL BALL 4 Ø III DIN 5401		1
16		--2 SPEED DRIVE ASSY 50 Hz	41461	1
	17	---SHIFTING CROSS, ONLY 50 Hz	41364	1
	18	---WASHER 6,1X10X0,1-0,4		AR
	19	---WASHER	29016	4
	20	---IDLER WHEEL, LARGE 50 Hz	41343	1
	21	---IDLER WHEEL, SMALL 50 Hz	41342	1
	22	---E-WASHER 3,2 DIN 6799		2
	23	--FLATBELT	23360	1
24		-ELECTRICAL COUPLING		1
	25	--WORM DRIVE ASSEMBLY	41338	1
	26	---CONE PRESSURE SPRING	205280	1
26L		CONTINUED 1		

Carriage drive

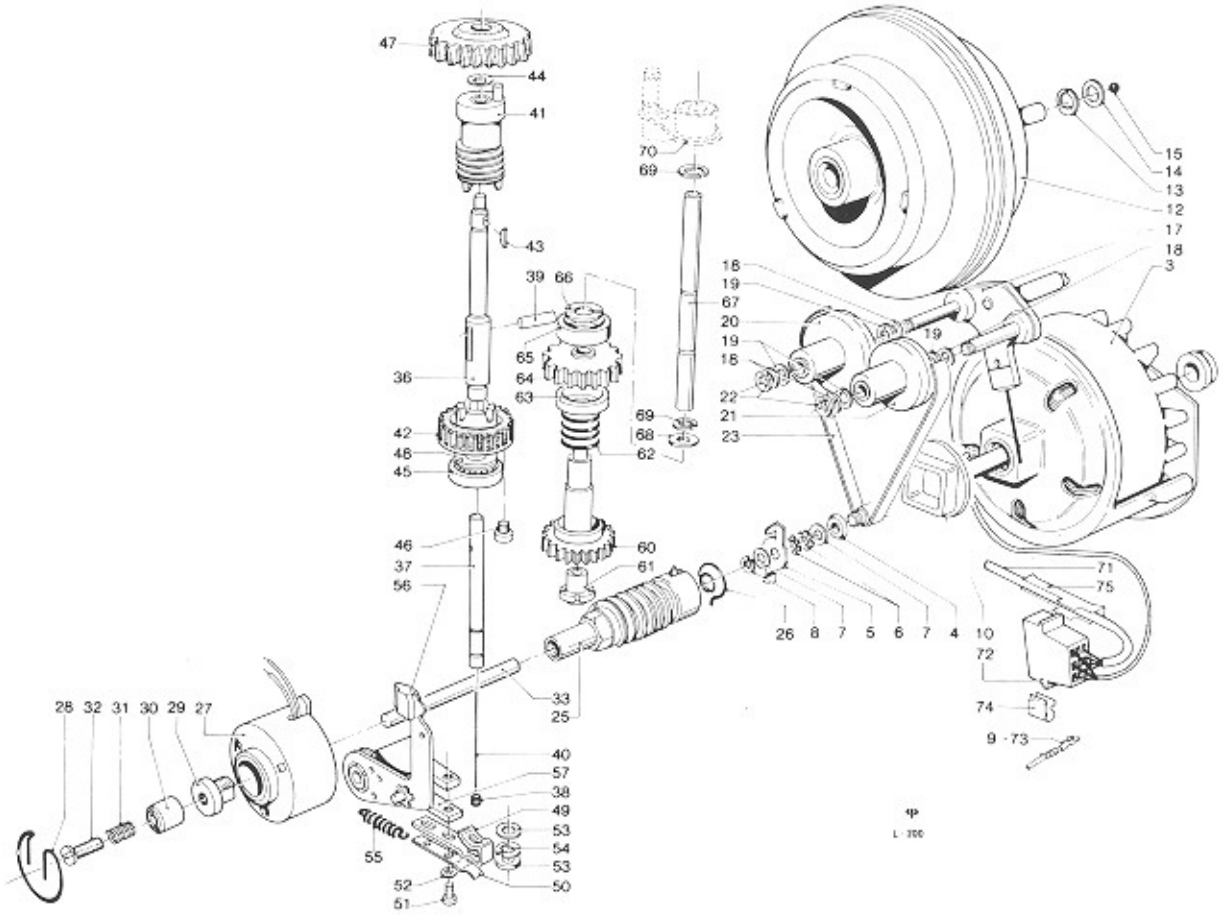

POSITION	DESCRIPTION	PART NUMBER	QTY
26M	CONTINUED 1		
27	--ELECTRICAL COUPLING SOLENOID (CLUTCH) ASSY	41349	1
28	--CLIP	205302	1
29	--CORE	22137	1
30	--ARMATURE	41037	1
31	---PRESSURE SPRING	205147	1
32	---SCREW AM 3X12 DIN 84		1
33	--COUPLING ROD	201527	1
34	-ALTERNATING CLUTCH (SCAN-TRANSFERPLAY)		
35	--ALTERNATING CLUTCH ASSEMBLY	10160	1
36	---CLUTCH SHAFT	23141	1
37	---CLUTCH ROD	22053	1
38	----LOCKING SCREW M 2,6X4 DIN 551		1
39	---DRIVE PIN	22054	1
40	---NEEDLE	22055	1
41	--WORMGEAR FOR ALTERNATING CLUTCH ASSY	41503	1
42	--CLUTCH GEAR	29032	1
43	--LOCKING SPRING 1,5X2,6 DIN 6888		1
44	--WASHER 6,2X10X0,05-0,2		AR
45	--BALL BEARING EL 6 ZZ	206058	1
46	--SCREW AM 3X6 DIN 7985		2
47	--COUPLING GEAR	22914	1
48	--WASHER 6,2X9X0,3		1
49	--CLUTCH ARM	22138	1
50	--CLUTCH SPRING FLAT	205144	1
51	--SCREW AM 3X8 DIN 7985		2
51L	CONTINUED 2		

SPARE PARTS LIST

Carriage drive

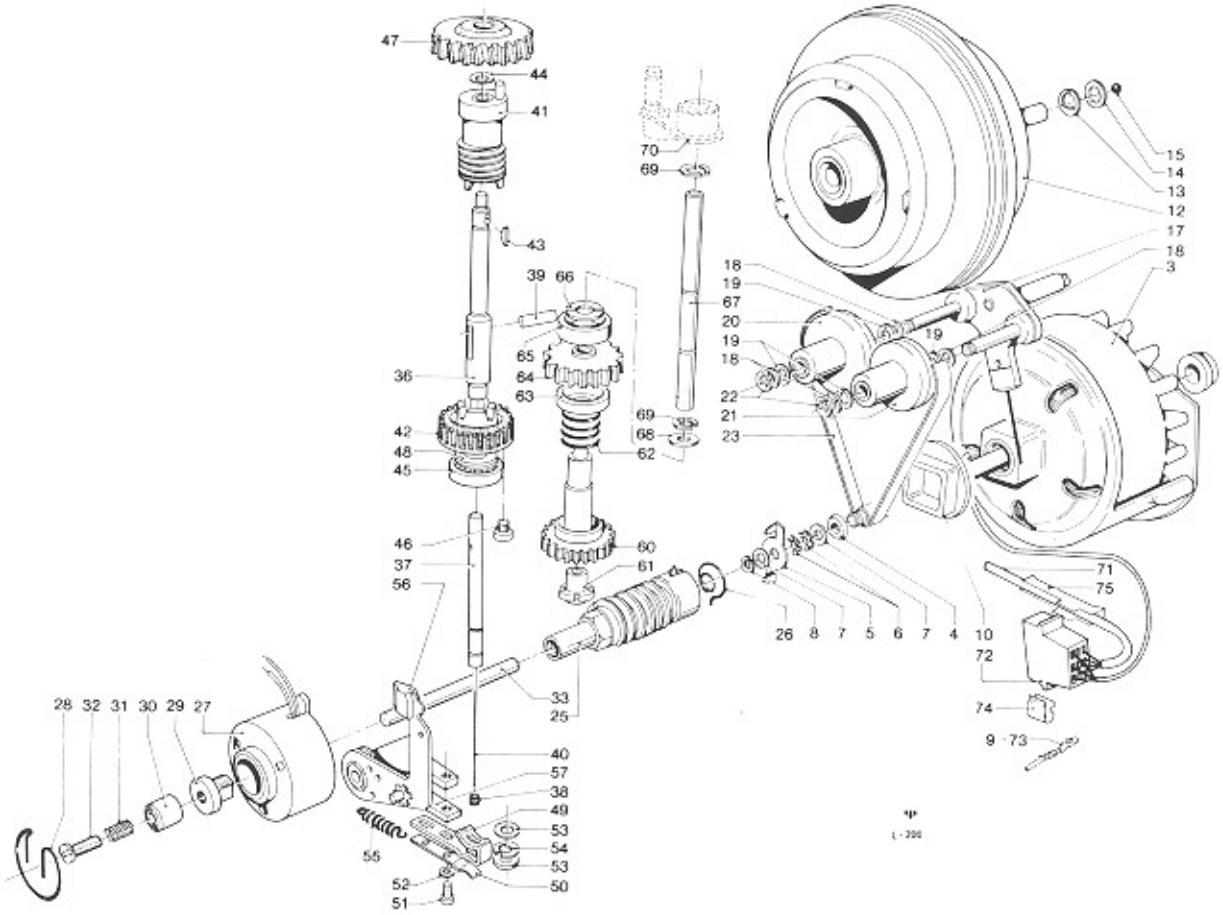

POSITION	DESCRIPTION	PART NUMBER	QTY
51M	CONTINUED 2		
52	--WASHER 3,2X5,4X0,3		2
53	--WASHER 4,2X6,5X0,5		2
54	--E-WASHER 3,2 DIN 6799		1
55	--TENSION SPRING	205149	1
56	--LOCKING PAWL ASSEMBLY	41464	1
57	--SPACER 0,5mm	22490	AR
57A	--SPACER 1,0mm	22491	AR
57B	--SPACER 2,0mm	22152	AR
58	-SCAN ASSEMBLY		1
59	--SLIP CLUTCH ASSEMBLY	41555	1
60	---SCAN GEAR	202690	1
61	---HUB	202694	1
62	---PRESSURE SPRING	205306	1
63	---FRICTION DISC, LOWER	202691	1
64	---DRIVE GEAR	23313	1
65	---FRICTION DISC, UPPER	202692	1
66	---SAFETY SEGMENT	23176	2
67	--SHAFT	23062	1
68	--WASHER 5,1X11,8X0,3		2
69	--E-WASHER 4 DIN 6799		2
70	--LATCHING LEVER SEE PAGE L 300		
71	-HARNESS-CARRIAGE	41507	1
72	--AMP-PLUG 9 PRONG	225105	1
73	--AMP-LOK CONTACT NR. 42859-2	222205	4
74	--CLAMP TYP SCO 5069	205276	1
75	-CABLE CHANNEL	23177	1

SPARE PARTS LIST

Transfer and tonearm drive

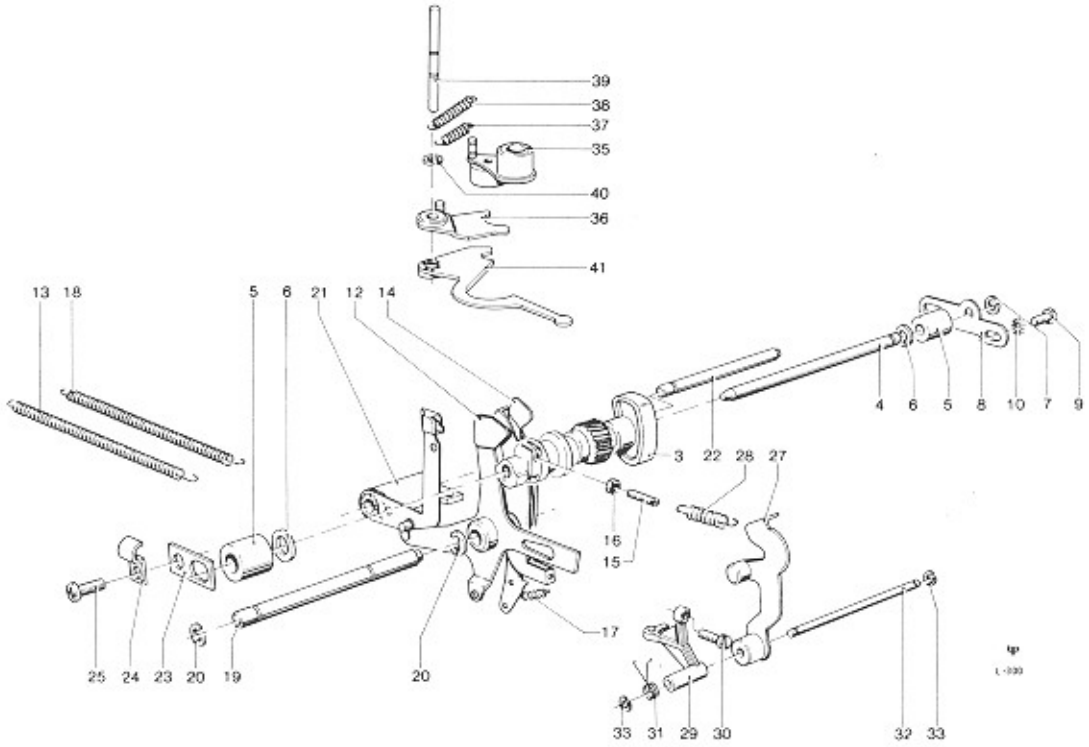

POSITION	DESCRIPTION	PART NUMBER	QTY
1	TRANSFER AND TONEARM DRIVE		1
2	-CAMSHAFT		1
3	--CAMSHAFT ASSY	41337	1
4	--SHAFT	22908	1
5	--SPACER	22146	2
6	--WASHER 5,2X10X0,05-0,2		AR
7	--E-WASHER 4 DIN 6799		1
8	--ADJUSTING PLATE	22768	1
9	--SCREW AM 4X6 DIN 7985		2
10	--LOCKWASHER 4		2
11	-SEARCH AND LOCKING ASSEMBLY		1
12	--TRIP LEVER ASSEMBLY	41487	1
13	--TENSION SPRING	205148	1
14	--LOCKING LEVER ASSEMBLY	41031	1
15	---LOCKING SCREW M 2,6X0,35X10 DIN 551		1
16	---NUT BM 2,6X0,35 DIN 439		1
17	--PRESSURE SPRING	205156	1
18	--TENSION SPRING	205150	1
19	--SHAFT	23130	1
20	--E-WASHER 4 DIN 6799		2
21	--LOCKING PAWL ASSEMBLY SEE PAGE L 200		1
22	--SHAFT	23145	1
23	--SHAFT SAFETY	22132	1
24	--CABLE CLAMP 3 NR. 6100a	229002	1
25	--SCREW AM 3X5 DIN 7985		1
25L	CONTINUED 1		

SPARE PARTS LIST

Transfer and tonearm drive

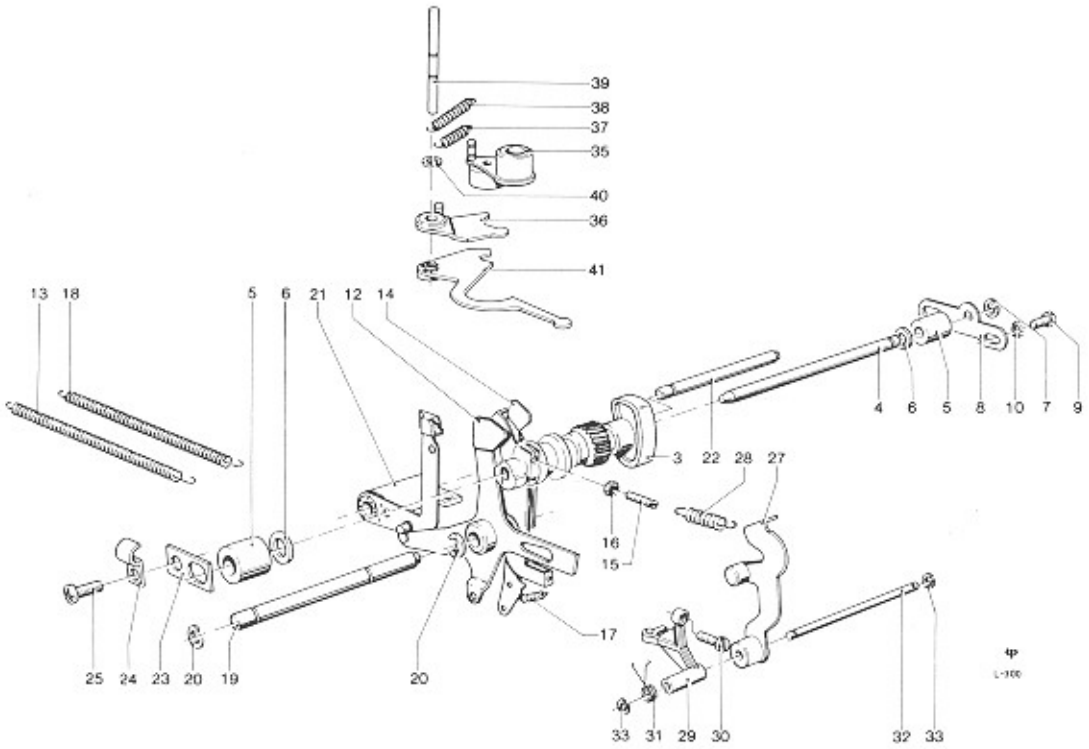

POSITION	DESCRIPTION	PART NUMBER	QTY	
25M	CONTINUED 1			
26	-TRANSFER ASSEMBLY		1	
27	--SPEED CONTROL LEVER ASSEMBLY	41341	1	
28	---TENSION SPRING	205238	1	
29	--CONTACT LEVER (OPERATING SWITCH) ASSEMBLY	41346	1	
30	--SCREW	22896	1	
31	--TORSION SPRING	205305	1	
32	--SHAFT	22895	1	
33	--E-WASHER 4 DIN 6799		2	
34	-TONEARM DRIVE		1	
35	--LATCHING LEVER ASSEMBLY	41483	1	
36	--CRADLE ACTUATOR ASSEMBLY	41500	1	
37	--TENSION SPRING	205234	1	
38	--TENSION SPRING	205235	1	
39	--SHAFT	22136	1	
40	--E-WASHER 2,3 DIN 6799		2	
41	--PICK UP SHIFTING LEVER	41015	1	

SPARE PARTS LIST

Record drive and tonearm

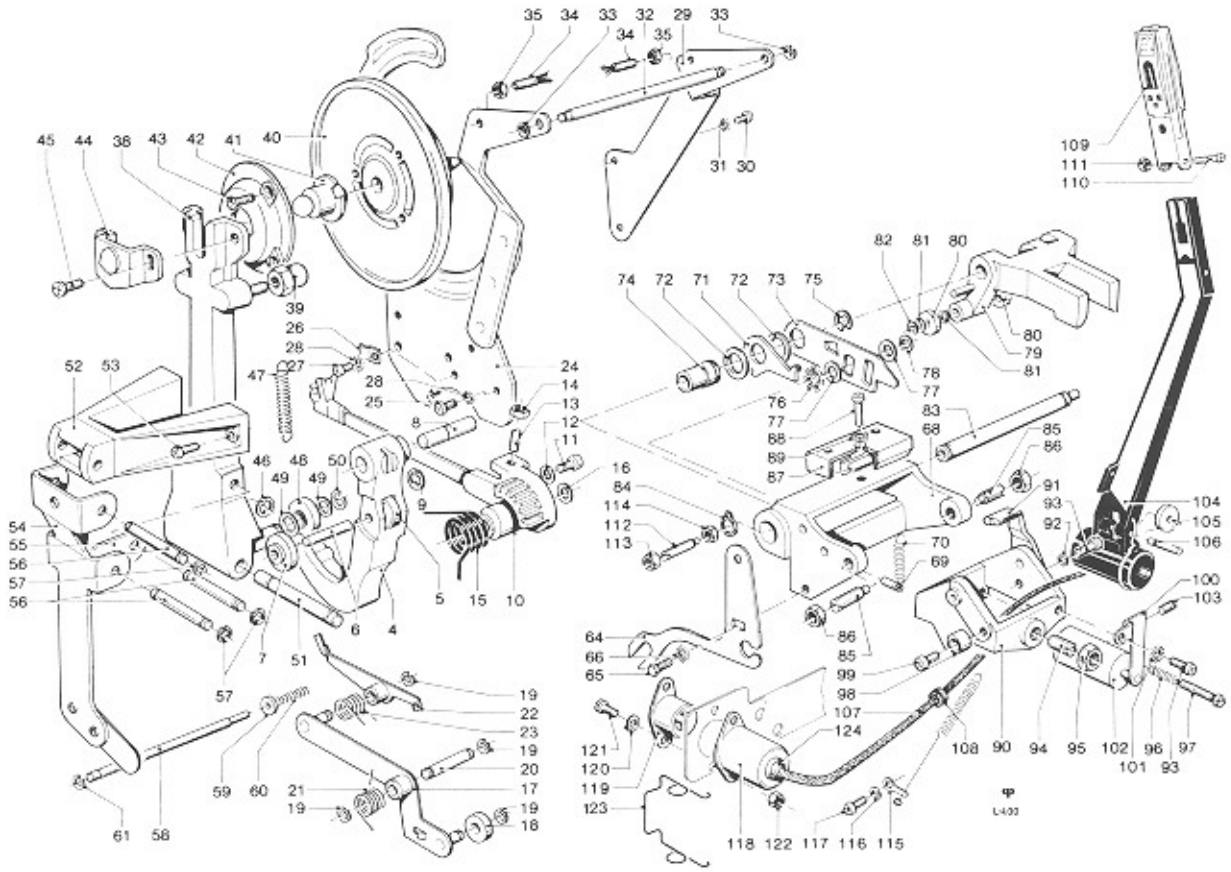

POSITION	DESCRIPTION	PART NUMBER	QTY
1	RECORD DRIVE AND TONEARM		
2	-RECORD DRIVE		1
3	--GEARSEGMENT ASSEMBLY	41463	1
4	---GEARSEGMENT	23073	1
5	---ROLLER ASSEMBLY	41354	1
6	---SHAFT	22874	1
7	--ROLLER ASSEMBLY	41356	1
8	--SHAFT	22133	1
9	---E-WASHER 4 DIN 6799		1
10	--RECORD TRANSFER ARM ASSEMBLY	41532	1
11	---SCREW AM 3X5 DIN 7985		1
12	---WASHER 3,2 DIN 125		1
13	---LOCKING SCREW M 4X10 DIN 551		1
14	---NUT BM 4 DIN 439		1
15	--TORSION SPRING	205325	1
16	--WASHER 5,2X10X0,1-0,4		AR
17	--COUPLING LEVER ASSEMBLY	41502	1
18	--ROLLER	23261	1
19	--E-WASHER 2,3 DIN 6799		4
20	--SHAFT	23058	1
21	--TORSION SPRING	205332	1
22	--ADVANCE LEVER ASSEMBLY	41501	1
23	--TORSION SPRING	205326	1
24	--GUIDE PLATE ASSEMBLY	41477	1
25	---SCREW AM 3X5 DIN 7985		2
26	---CABLE CLAMP 3 NR. 6100a	229002	1
27	---SCREW AM 3X6 DIN 7985		1
28	---LOCKWASHER 3		3
29	--SUPPORT BRACKET	23091	1
30	---SCREW AM 4X8 DIN 7985		2
31	---LOCKWASHER 4		2
32	--SHAFT	23092	1
33	---E-WASHER 3,2 DIN 6799		2
34	--BRUSH ASSEMBLY	202427	2
35	---NUT BM 4 DIN 439		2
35L	CONTINUED 1		

SPARE PARTS LIST

Record drive and tonearm

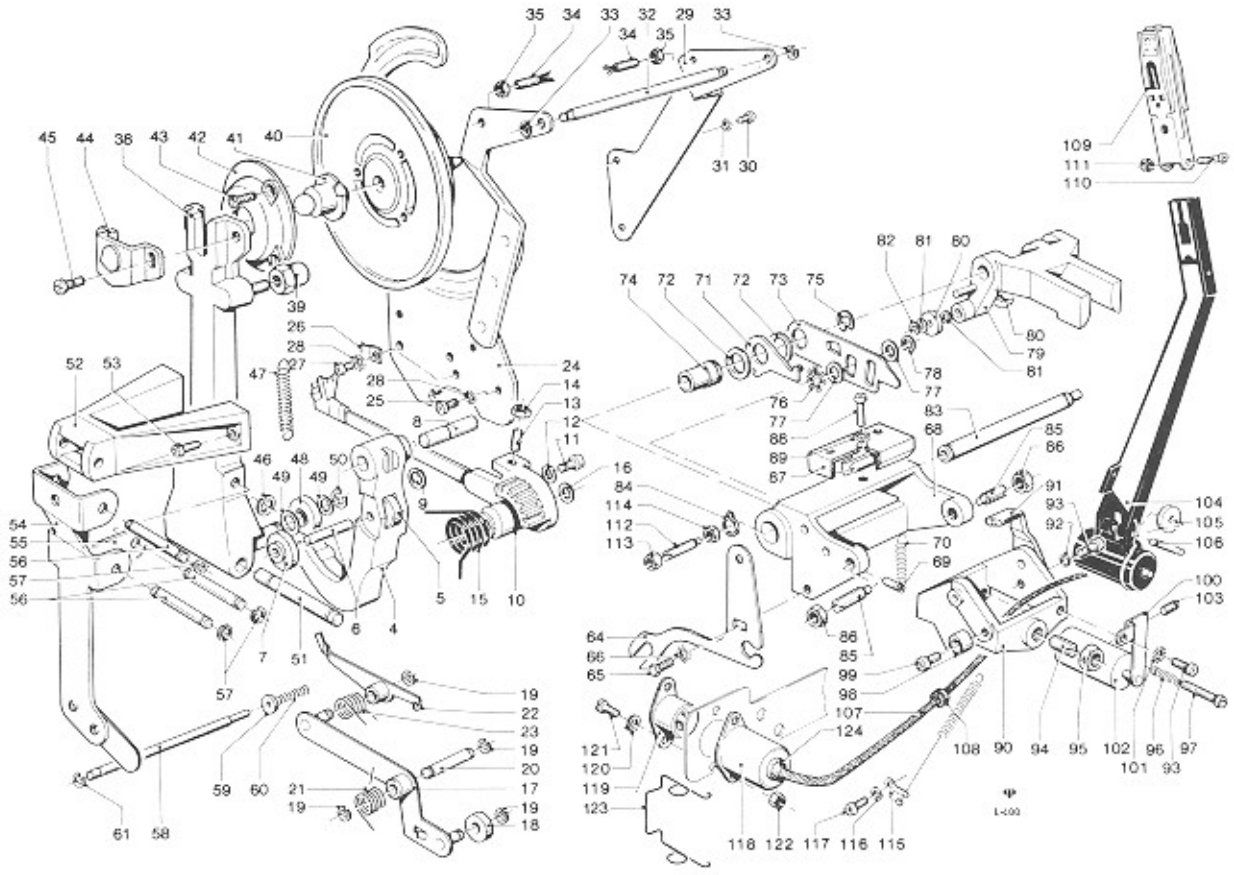

POSITION	DESCRIPTION	PART NUMBER	QTY	
35M	CONTINUED 1			
36	-RECORD CLAMP ASSEMBLY		1	
37	--RECORD CLAMP		1	
38	---CLAMP ARM ASSEMBLY	41355	1	
39	---ADJUSTING NUT	29025	2	
40	---CLAMP DISC	29022	1	
41	---JOINT	41357	1	
42	---FLANGE	29023	1	
43	---SCREW BZ 2,9X6,5 DIN 7983		3	
44	---PIVOT BLOCK	29024	1	
45	----SCREW AM 4X8 DIN 7985		2	
46	---E-WASHER 3,2 DIN 6799		1	
47	---TENSION SPRING	205304	1	
48	---ROLLER ASSEMBLY	41354	1	
49	----WASHER 7,5X4,2X0,1		2	
50	----E-WASHER 3,2 DIN 6799		1	
51	---SHAFT	22890	1	
52	---SUPPORT FOR CLAMP ARM	22900	1	
53	----SCREW AM 3X6 DIN 7985		2	
54	---SPEED CONTROL ACTUATOR ASSY	41340	1	
55	---INTERMEDIATE LEVER	22846	1	
56	---SHAFT	22879	3	
57	----E-WASHER 2,3 DIN 6799		6	
58	---SHIFTING ROD	22893	1	
59	----RING	22894	1	
60	----PRESSURE SPRING	205303	1	
61	----E-WASHER 4 DIN 6799		1	
62	-TONE ARM ASSEMBLY		1	
63	--CRADLE ASSEMBLY	10161	1	
64	---CRADLE GUIDE	23039	1	
65	----SCREW M 4X6 DIN 933		1	
65L	CONTINUED 2			

SPARE PARTS LIST

Record drive and tonearm

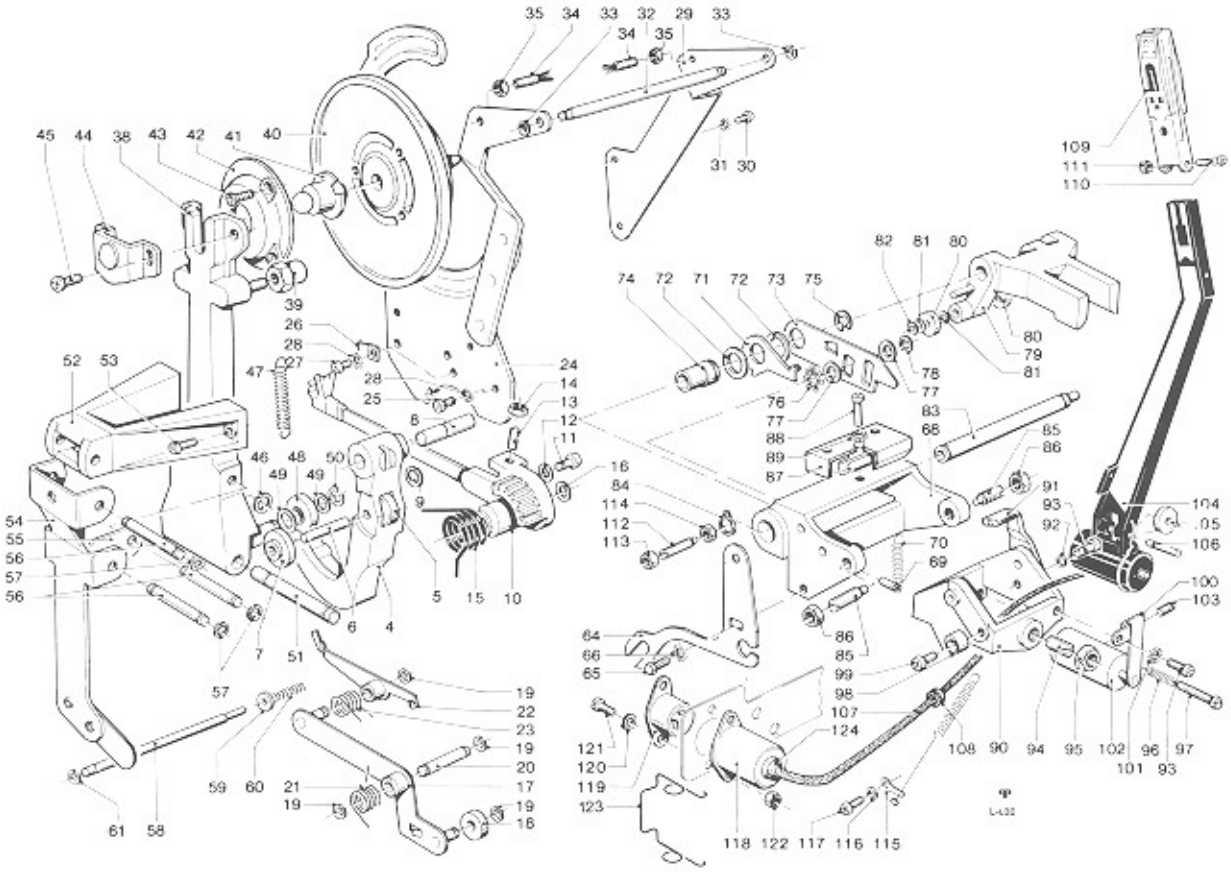

POSITION	DESCRIPTION	PART NUMBER	QTY
65M	CONTINUED 2		
66	----LOCKWASHER 4		1
67	---CRADLE BLOCK ASSEMBLY	41481	1
68	----CRADLE BLOCK		1
69	----PIN 3X8		1
70	----TENSION SPRING	205313	1
71	----RESET LEVER ACTUATOR	22929	1
72	----WASHER 8,3X12X0,1		2
73	----RESET LEVER	22930	1
74	----SLEEVE	22927	1
75	----E-WASHER 7 DIN 6799		1
76	----SPRING WASHER	205119	1
77	----WASHER 14X5,3X0,4		2
78	----E-WASHER 4 DIN 6799		1
79	---RELEASE FORK ASSEMBLY	41368	1
80	----ROLLER	22122	2
81	----WASHER 3,2X7X0,1		AR
82	----E-WASHER 4 DIN 6799		2
83	---SHAFT	22098	1
84	---CLIP RING 4,8 SP 220		2
85	---LOCKING SCREW	22099	2
86	---NUT BM 5 DIN 439		2
87	---REED SWITCH HOLDER ASSEMBLY	41369	1
88	---SCREW AM 3X6 DIN 7985		1
89	---LOCKWASHER 3		1
90	---PICK-UP PIVOT BLOCK ASSEMBLY	41367	1
91	----MAGNET HOLDER ASSEMBLY	41810	1
	MAGNET	201474	1
92	----WASHER 3,2 DIN 125		1
93	----SCREW M 3X7 DIN 7985		2
94	----LOCKING SCREW	22101	1
94L	CONTINUED 3		

SPARE PARTS LIST

Record drive and tonearm

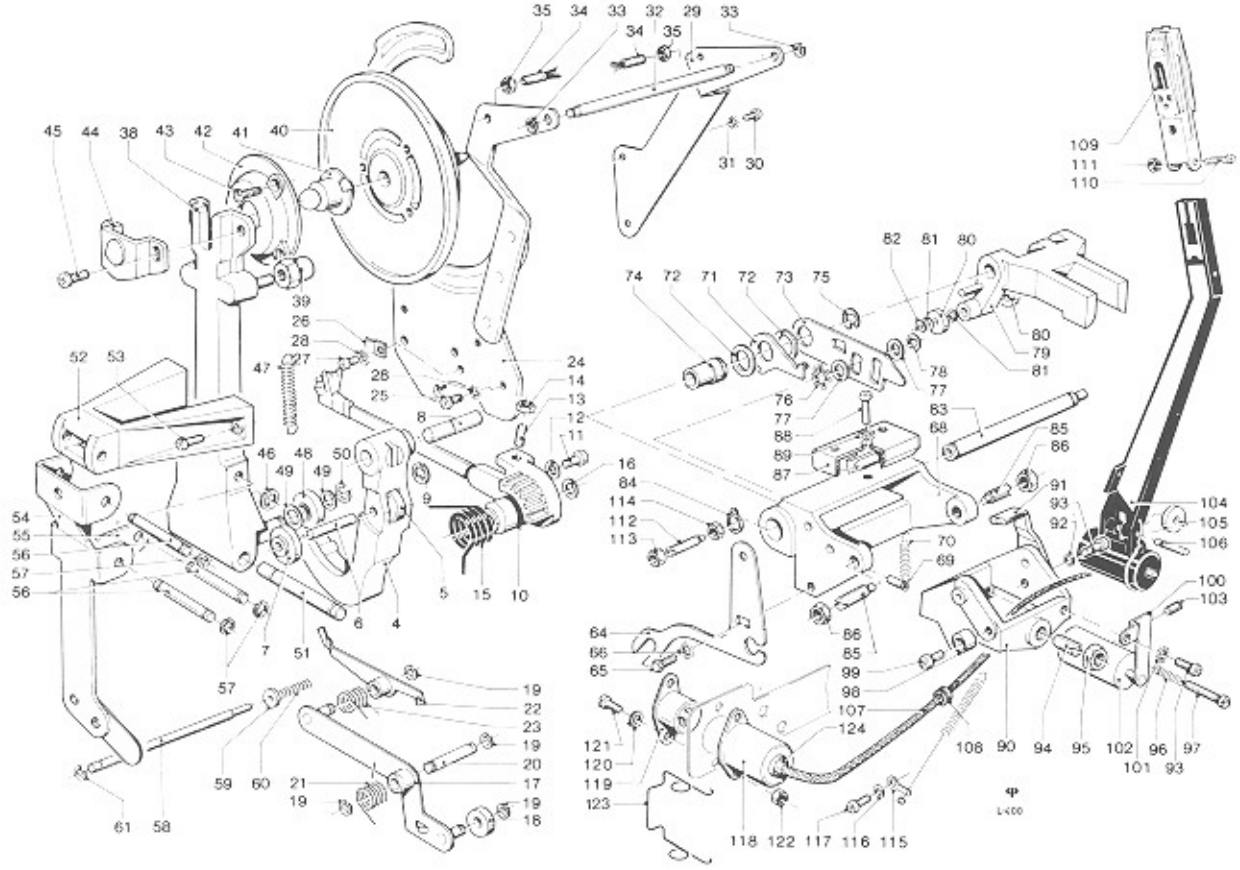

POSITION	DESCRIPTION	PART NUMBER	QTY
94M	CONTINUED 3		
95	----NUT BM 5 DIN 439		1
96	----PRESSURE SPRING	205147	1
97	----SCREW AM 3X16 DIN 7985		1
98	----ECCENTRIC WASHER	29037	1
99	----SCREW AM 3X6 DIN 7985		1
100	----COUNTERWEIGHT HOLDER ASSEMBLY	41020	1
101	----LOCKWASHER 3		1
102	----COUNTERWEIGHT	22103	1
103	----LOCKING SCREW M 3X6 DIN 417		1
104	---TONE ARM ASSEMBLY	41528	1
105	----ROLLER	22031	1
106	----PIN	22032	1
107	----TONE ARM CABLE TYP 319a Y (c) Y	227340	1
108	----GROMMET	207446	1
109	----CARTRIDGE STEREO WITH DIAMONDS	224074	1
110	----SCREW CM 1,7X13 DIN 85		1
111	----NUT BM 1,7 DIN 439		1
112	--LOCKING SCREW	22892	1
113	--NUT M 6 DIN 934		1
114	--NUT BM 6 DIN 439		1
115	--TONE ARM SPRING ASSEMBLY	41505	2
116	--WASHER 3,2 DIN 433		2
117	--SCREW AM 3X4 DIN 7985		2
118	--SHIELDING CAP	22147	1
119	--3 PRONG SOCKET MAB 3 S	225030	1
120	--LUG	229018	2
121	--SCREW AM 2,6X6 DIN 7985		2
122	--NUT BM 2,6 DIN 439		2
123	--SAFETY SPRING	205203	1
124	--GROMMET D 4	207511	1

SPARE PARTS LIST

Coin mechanism

POSITION	DESCRIPTION	PART NUMBER	QTY
1	COIN MECHANISM		
2	-COIN REJECTOR	207237	1
3	-HOUSING ASSEMBLY	41689	1
4	--ADD. BUTTON	222089	1
5	--SUBTR. BUTTON	222089	1
6	-CAPACITOR 0,022 MF	220046	3
7	-COIN SWITCH	222100	1
8	-SWITCH LEVER	45047	1
9	-COIN CHANNEL WITH COIN SWITCHES	10164	1
10	-COIN RETURN CUP	41306	1
11	PLUNGER ASSEMBLY SEE PAGE B 100		

SPARE PARTS LIST

Volume control

for Mono and Stereo

Volume Control R1 Order # 41479

One control and one reject button

for Stereo

Volume Control R2 Order # 41527

Each channel controlled separately and one reject button

SPARE PARTS LIST

Control Centre 220/50

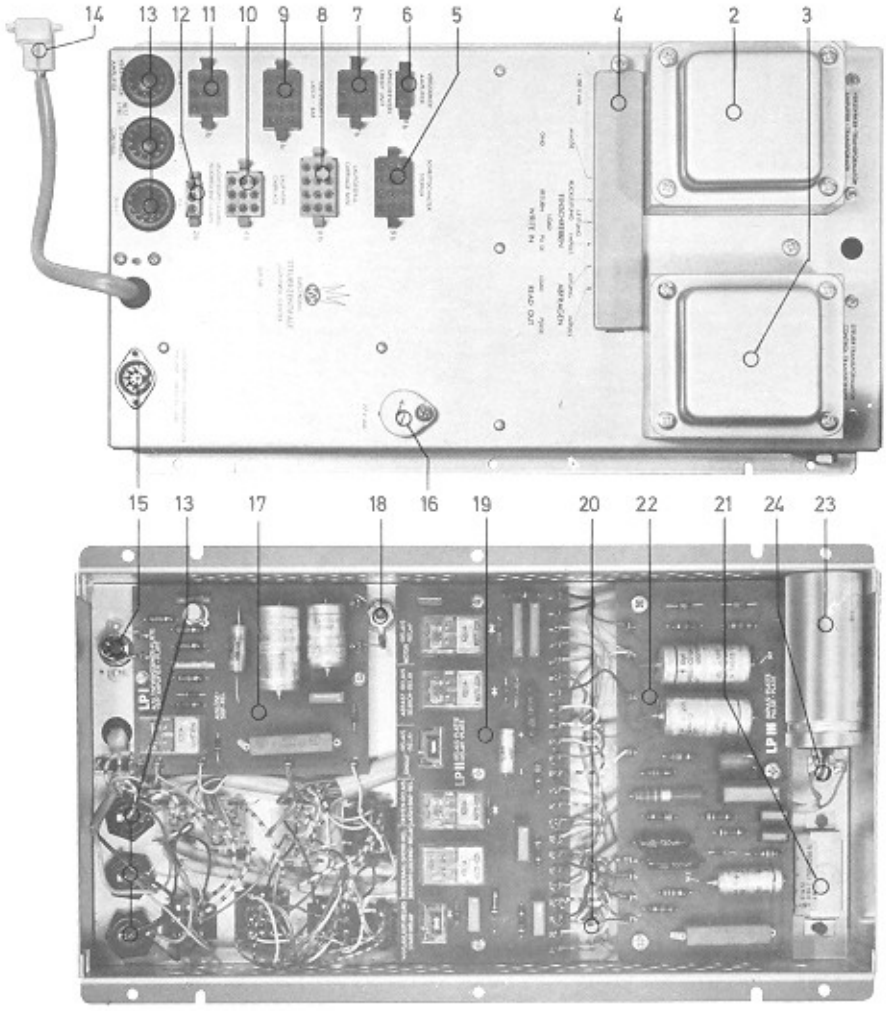

POSITION	DESCRIPTION		PART NUMBER	QTY
1	CONTROL CENTRE ASSEMBLY		41575	1
2	-AMPLIFIER TRANSFORMER WITH COVER		223194	1
3	-CONTROL TRANSFORMER WITH COVER		223193	1
4	-SAFETY COVER		29119	1
5	-AMP SOCKET 12 PRONG BLUE		23085	1
6	-AMP SOCKET 3 PRONG BLUE		23034	1
7	-AMP SOCKET 9 PRONG BLUE		23087	1
8	-AMP SOCKET 12 PRONG WHITE		225182	1
9	-AMP SOCKET 12 PRONG RED		22745	1
10	-AMP SOCKET 9 PRONG WHITE		225180	1
11	-AMP SOCKET 9 PRONG RED		23086	1
12	-AMP SOCKET 3 PRONG WHITE		225174	1
13	-FUSEHOLDER COMPLETE		225138	3
	FUSE 2 AMP SLO BLO		225020	1
	FUSE 0,6 AMP SLO BLO		225115	1
	FUSE 1,6 AMP SLO BLO		225195	1
14	-AMP PLUG 6 PRONG WHITE		225176	1
15	-METAL SOCKET 3 PRONG		225030	1
16	-SAFETY COVER		29039	1
17	-TRIP AMPLIFIER PLATE ASSY LP I	SEE PAGE S 100		
18	-ZENERDIODE ZL 27		227117	1
19	-RELAY PLATE ASSY LP II	SEE PAGE S 200		
20	-ZENERDIODE ZL 150		221118	1
21	-RECTIFIER WITH CLAMP		221122	2
22	-PULSE PLATE ASSY LP III	SEE PAGE S 300		
23	-MOTOR CAPACITOR 10 MF/150 V		220131	1
24	-VARISTOR E 299 DD/P344 S		221103	2

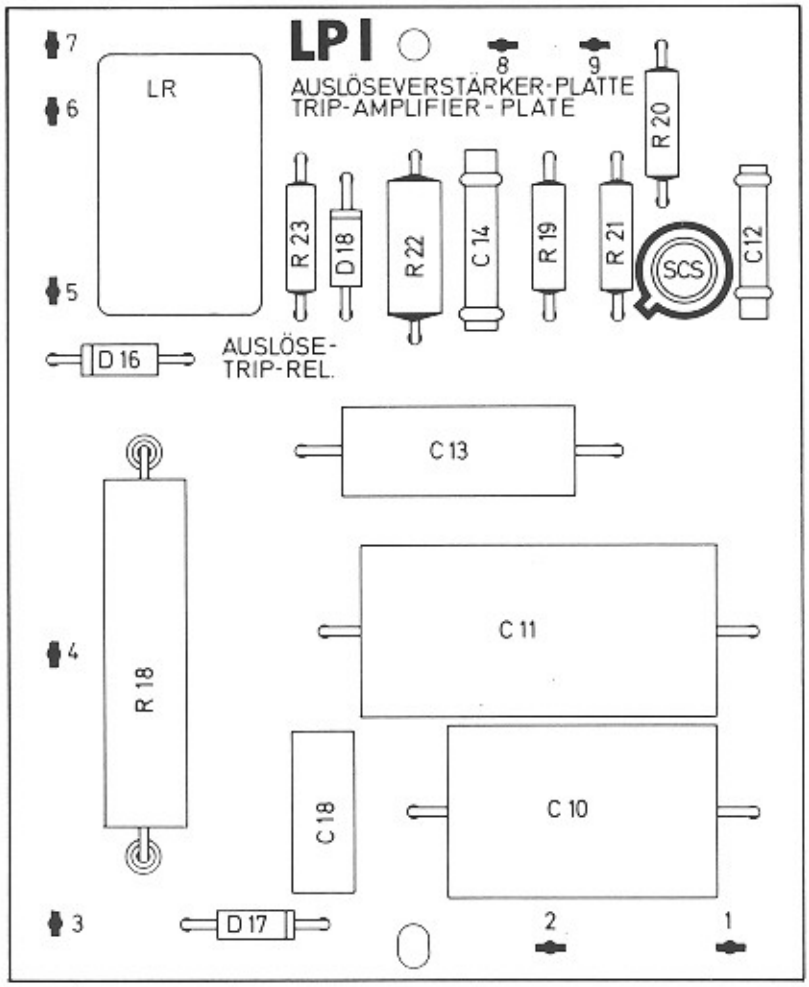

POSITION	DESCRIPTION	PART NUMBER	QTY
	TRIP AMPLIFIER PLATE, LP I, ASSEMBLED	41474	1
	-TRIP AMPLIFIER PLATE, WITHOUT PARTS	207385	1
LR	--TRIP RELAY 2 HIGH VOLTAGE CONTACTS	223182	1
SCS	--SILICONE CONTROLLED SWITCH BRY 20	221121	1
	HEATSINK WASHER	202760	1
R18	--WIRE WOUND RESISTOR, CHINA 100 OHM	221139	1
	CERAMIC SPACER	221123	2
R19	--CARBON RESISTOR 150 OHM	221147	1
R20	--CARBON RESISTOR (WITH BRY 20 WHITE) 220 OHM	221137	AR
	CARBON RESISTOR (WITH BRY 20 YELLOW) 180 OHM	221101	AR
	CARBON RESISTOR (WITH BRY 20 GREEN) 150 OHM	221147	AR
	CARBON RESISTOR (WITH BRY 20 RED) 120 OHM	221150	AR
R21	--CARBON RESISTOR 150 OHM	221147	1
R22	--CARBON RESISTOR 1 K OHM	221136	1
R23	--CARBON RESISTOR 100 OHM	221134	1
C10	--LYTIC 250 MF 70/80 V	220065	1
C11	--LYTIC 1000 MF 35/40 V	220107	1
C12	--CERAMIC 4,7 nF	220129	1
C13	--LYTIC 100 MF 35/40 V	220105	1
C14	--CERAMIC 6,8 nF	220128	1
C18	--MYLAR 0,22 MF 250 V	220077	1
D16	--SILICONE DIODE 400 V 1N 4004	221115	1
D17	--SILICONE DIODE 400 V 1N 4004	221115	1
D18	--SILICONE DIODE 400 V 1N 4004	221115	1

SPARE PARTS LIST

Control Centre 220/50

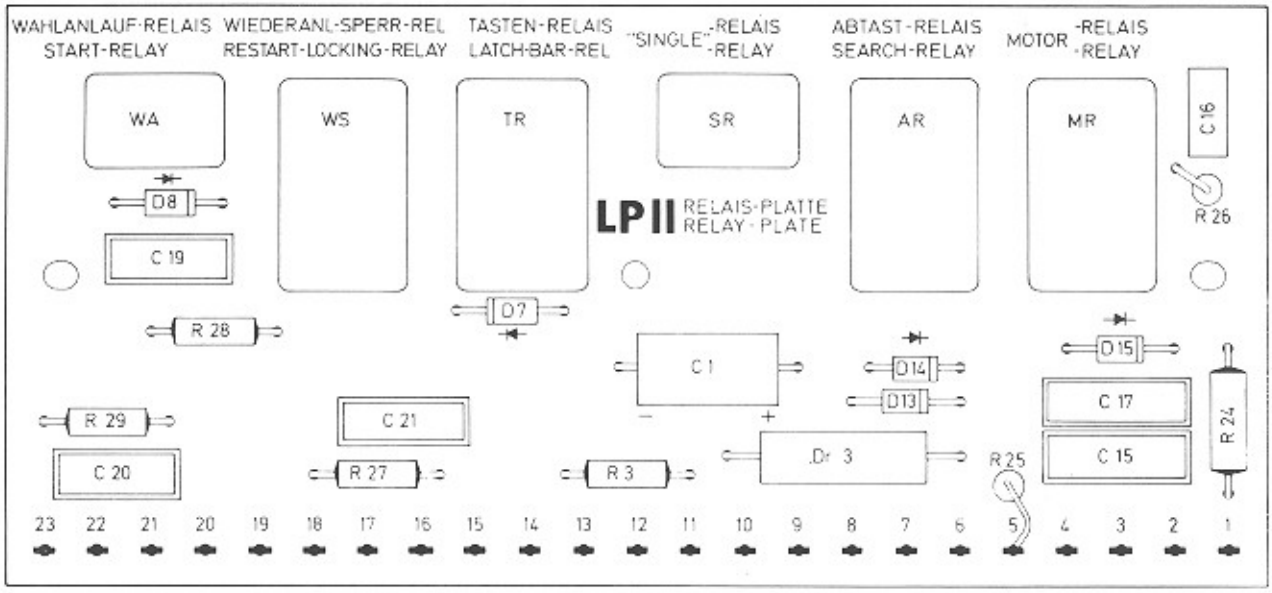

POSITION	DESCRIPTION	PART NUMBER	QTY
	RELAY PLATE, LP II, ASSEMBLED	41473	1
	-RELAY PLATE, WITHOUT PARTS	207384	1
WA	--START RELAY 1 HIGH VOLTAGE CONTACT	223183	1
WS	--RESTART LOCKING RELAY 4 LOW VOLTAGE CONTACTS	223180	1
TR	--LATCH BAR RELAY 2 HIGH VOLTAGE CONTACTS	223182	1
SR	--SINGLE RELAY 1 HIGH VOLTAGE CONTACT	223183	1
AR	--SEARCH RELAY 2 HIGH VOLTAGE CONTACTS	223182	1
MR	--MOTOR RELAY 2 HIGH VOLTAGE CONTACTS	223182	1
R3	--RESISTOR 33 OHM	221133	1
R24	--RESISTOR 1 K OHM	221136	1
R25	--RESISTOR 33 OHM	221133	1
R26	--RESISTOR 270 OHM	221096	1
R27	--RESISTOR 47 OHM	221129	1
R28	--RESISTOR 47 OHM	221129	1
R29	--RESISTOR 47 OHM	221129	1
C1	--LYTIC 50 MF 35/40 V	220103	1
C15	--MYLAR 0,22 MF 250 V	220127	1
C16	--MYLAR 0,022 MF 630 V	220122	1
C17	--MYLAR 0,022 MF 400 V	220127	1
C19	--MYLAR 0,22 MF 250 V	220077	1
C20	--MYLAR 0,22 MF 250 V	220077	1
C21	--MYLAR 0,22 MF 250 V	220077	1
DR3	--INDUCTOR 130 MH	221146	1
D7	--SILICONE DIODE 400 V	221115	1
D8	--SILICONE DIODE 400 V	221115	1
D13	--SILICONE DIODE 600 V	221119	1
D14	--SILICONE DIODE 400 V	221115	1
D15	--SILICONE DIODE 400 V	221115	1

SPARE PARTS LIST

Control Centre 220/50

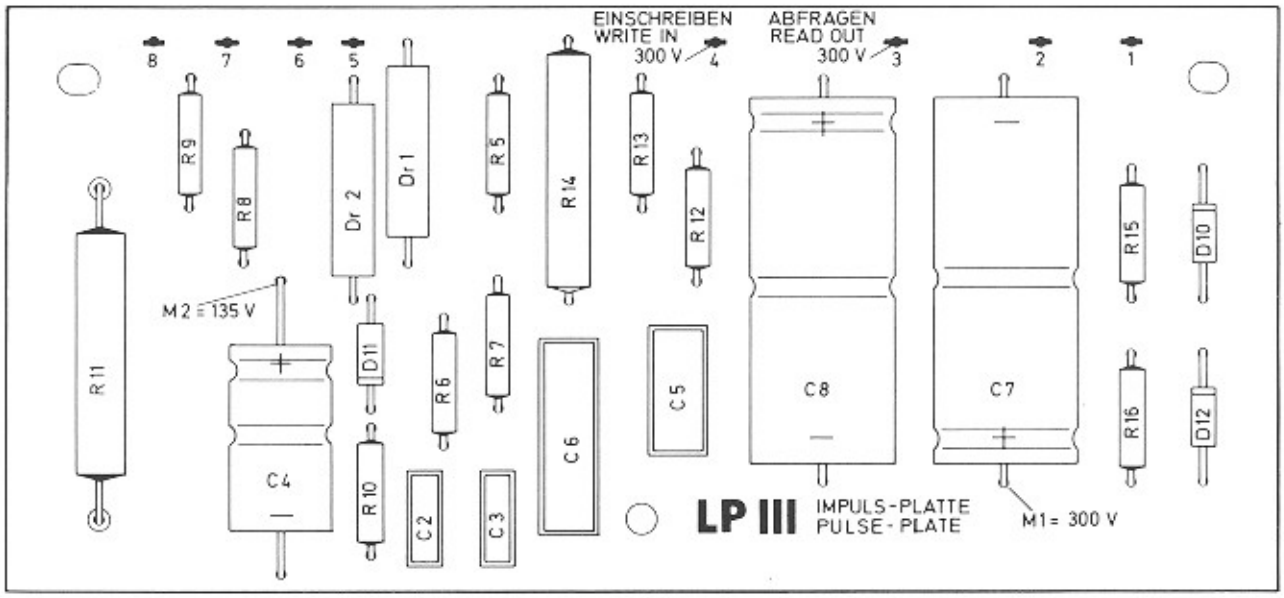

POSITION	DESCRIPTION	PART NUMBER	QTY
	PULSE PLATE, LP III, ASSEMBLED	41472	1
	-PULSE PLATE, WITHOUT PARTS	207383	1
R5	--CARBON RESISTOR 47 OHM	221129	1
R6	--CARBON RESISTOR 47 OHM	221129	1
R7	--CARBON RESISTOR 47 OHM	221129	1
R8	--CARBON RESISTOR 33 K OHM	221131	1
R9	--CARBON RESISTOR, WITH ZL 150 (130-140 V) 1 K OHM	221025	AR
	CARBON RESISTOR, WITH ZL 150 (140-150 V) 10 K OHM	221028	AR
	CARBON RESISTOR, WITH ZL 150 (150-165 V) 22 K OHM	221114	AR
R10	--CARBON RESISTOR 150 K OHM	221130	1
R11	--WIRE WOUND RESISTOR 7,5 K OHM	221140	1
	CERAMIC SPACER	221123	2
R12	--CARBON RESISTOR 270 K OHM	221126	1
R13	--CARBON RESISTOR 150 K OHM	221147	1
R14	--CARBON RESISTOR 56 K OHM	221128	1
R15	--CARBON RESISTOR 1 M OHM	221125	1
R16	--CARBON RESISTOR 1 M OHM	221125	1
DR1	--INDUCTOR 130 MH	221146	1
DR2	--INDUCTOR 100 MH	221145	1
C2	--MYLAR 0,033 MH 400 V	220114	1
C3	--MYLAR 0,01 MH 630 V	220125	1
C4	--LYTIC 8 MF 350/385 V	220119	1
C5	--MYLAR 0,15 MF 400 V	220117	1
C6	--MYLAR 0,15 MF 630 V	220126	1
C7	--LYTIC 16 MF 450/500 V	220120	1
C8	--LYTIC 16 MF 450/500 V	220120	1
D10	--SILICIONE DIODE 600 V	221119	1
D11	--SILICIONE DIODE 170 V	221115	1
D12	--SILICIONE DIODE 600 V	221119	1

SPARE PARTS LIST

Transistor - Amplifier 70 S

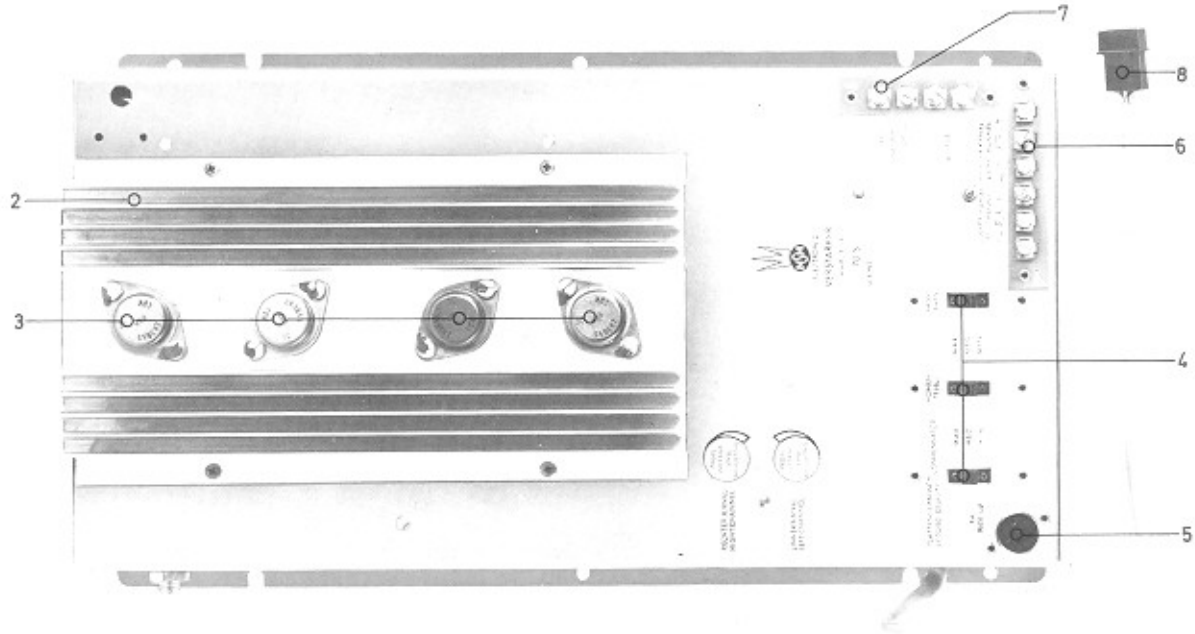

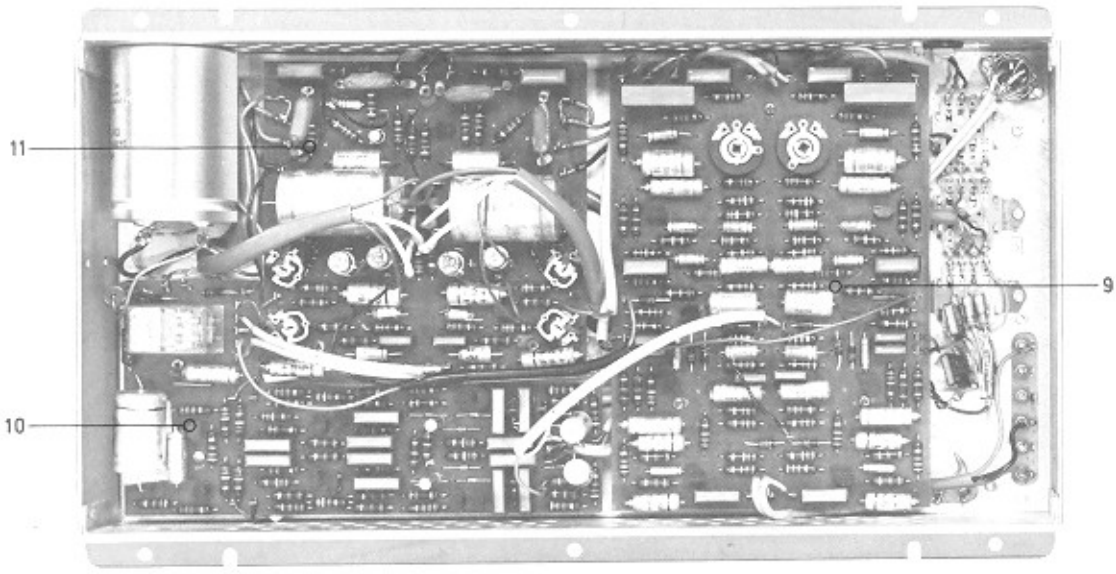

POSITION	DESCRIPTION		PART NUMBER	QTY
1	AMPLIFIER ASSEMBLY		224091	1
2	-HEAT SINK		10151	1
3	--POWER TRANSISTOR		221106	4
4	-SLIDERSWITCH		222151	3
5	-METAL SOCKET MAB 3 S		225030	1
6	-CONNECTOR PLATE, OUTPUT		10153	1
7	-CONNECTOR PLATE, REMOTE CONTROL		10152	1
8	-AMP PLUG 3 PRONG		225175	1
9	-PRINTED CIRCUIT PLATE, LP I S, ASSEMBLED	SEE PAGE VS 100		1
10	-PRINTED CIRCUIT PLATE, LP II S, ASSEMBLED	SEE PAGE VS 200		1
11	-PRINTED CIRCUIT PLATE, LP III S, ASSEMBLED	SEE PAGE VS 300		1

SPARE PARTS LIST

Transistor - Amplifier 70 S

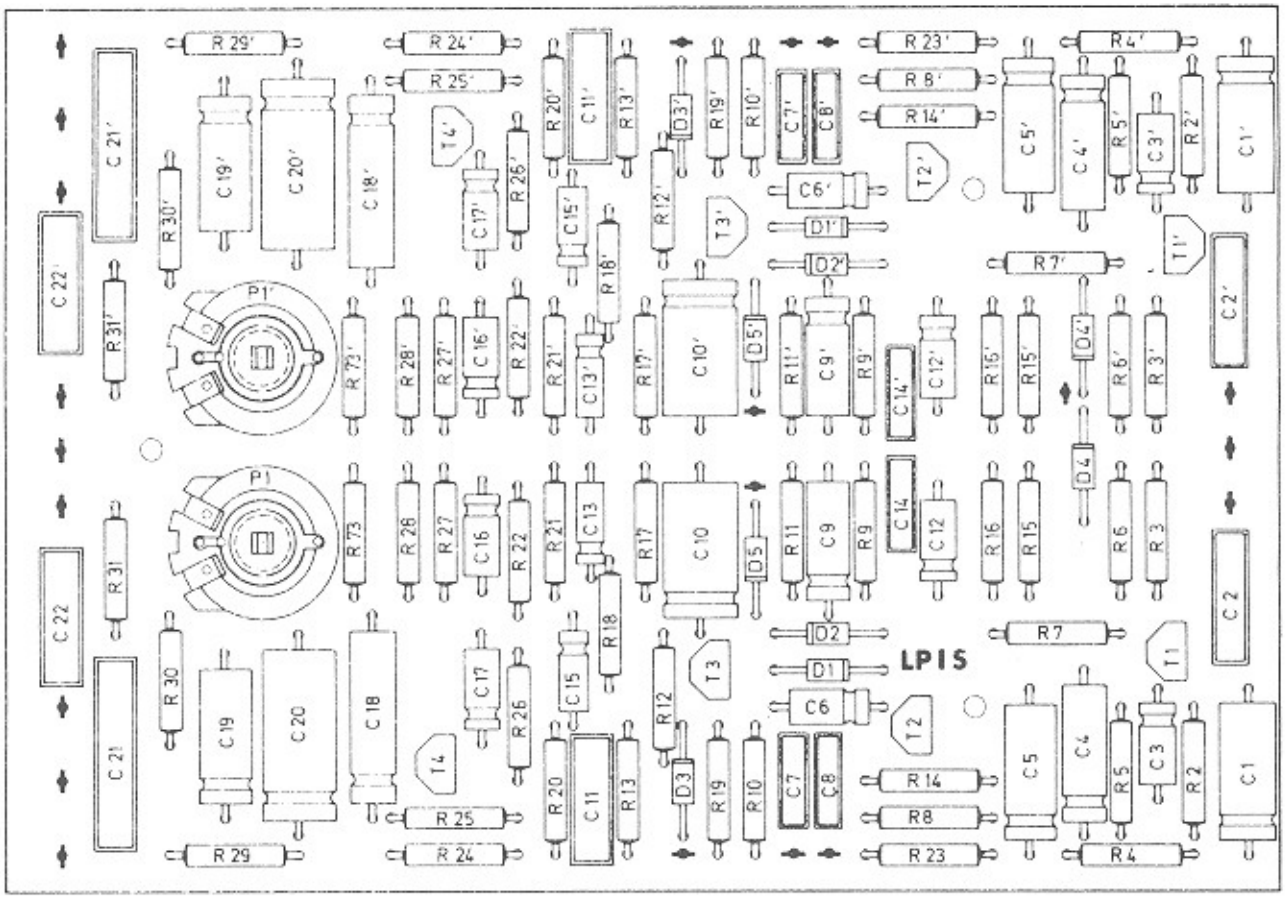

POSITION	DESCRIPTION			PART NUMBER	QTY
	PLATE LP I S, ASSEMBLED			10154	
R 2/R 2'	CARBON RESISTOR	2 Megohm	1/3 W ± 10%	221208	
R 3/R 3'	CARBON RESISTOR	8 200 Ohm	1/3 W ± 10%	221202	
R 4/R 4'	CARBON RESISTOR	3 300 Ohm	1/3 W ± 10%	221201	
R 5/R 5'	CARBON RESISTOR	1 Megohm	1/3 W ± 10%	221008	
R 6/R 6'	CARBON RESISTOR	120 000 Ohm	1/3 W ± 10%	221164	
R 7/R 7'	CARBON RESISTOR	27 000 Ohm	1/3 W ± 10%	221093	
R 8/R 8'	CARBON RESISTOR	1000 Ohm	1/3 W ± 10%	221025	
R 9/R 9'	CARBON RESISTOR	3 900 Ohm	1/3 W ± 10%	221190	
R10/R10'	CARBON RESISTOR	82 000 Ohm	1/3 W ± 10%	221203	
R11/R11'	CARBON RESISTOR	390 000 Ohm	1/3 W ± 10%	221206	
R12/R12'	CARBON RESISTOR	10 000 Ohm	1/3 W ± 10%	221028	
R13/R13'	CARBON RESISTOR	8 200 Ohm	1/3 W ± 10%	221202	
R14/R14'	CARBON RESISTOR	22 000 Ohm	1/3 W ± 10%	221014	
R15/R15'	CARBON RESISTOR	2 700 Ohm	1/3 W ± 10%	221200	
R16/R16'	CARBON RESISTOR	560 Ohm	1/3 W ± 10%	221191	
R17/R17'	CARBON RESISTOR	4 700 Ohm	1/3 W ± 10%	221173	
R18/R18'	CARBON RESISTOR	120 Ohm	1/3 W ± 10%	221150	
R19/R19'	CARBON RESISTOR	27 000 Ohm	1/3 W ± 10%	221093	
R20/R20'	CARBON RESISTOR	820 000 Ohm	1/3 W ± 10%	221207	
R21/R21'	CARBON RESISTOR	120 000 Ohm	1/3 W ± 10%	221164	
R22/R22'	CARBON RESISTOR	82 000 Ohm	1/3 W ± 10%	221203	
R23/R23'	CARBON RESISTOR	10 000 Ohm	1/3 W ± 10%	221028	
R24/R24'	CARBON RESISTOR	10 000 Ohm	1/3 W ± 10%	221028	
R25/R25'	CARBON RESISTOR	10 000 Ohm	1/3 W ± 10%	221028	
R26/R26'	CARBON RESISTOR	100 000 Ohm	1/3 W ± 10%	221204	
R27/R27'	CARBON RESISTOR	120 000 Ohm	1/3 W ± 10%	221164	
R28/R28'	CARBON RESISTOR	3 900 Ohm	1/3 W ± 10%	221190	
R29/R29'	CARBON RESISTOR	8 200 Ohm	1/3 W ± 10%	221202	
R30/R30'	CARBON RESISTOR	2 200 Ohm	1/3 W ± 10%	221199	
R31/R31'	CARBON RESISTOR	22 000 Ohm	1/3 W ± 10%	221014	
R73/R73'	CARBON RESISTOR	68 Ohm	1/3 W ± 10%	221189	

CONTINUED 1

SPARE PARTS LIST

Transistor - Amplifier 70 S

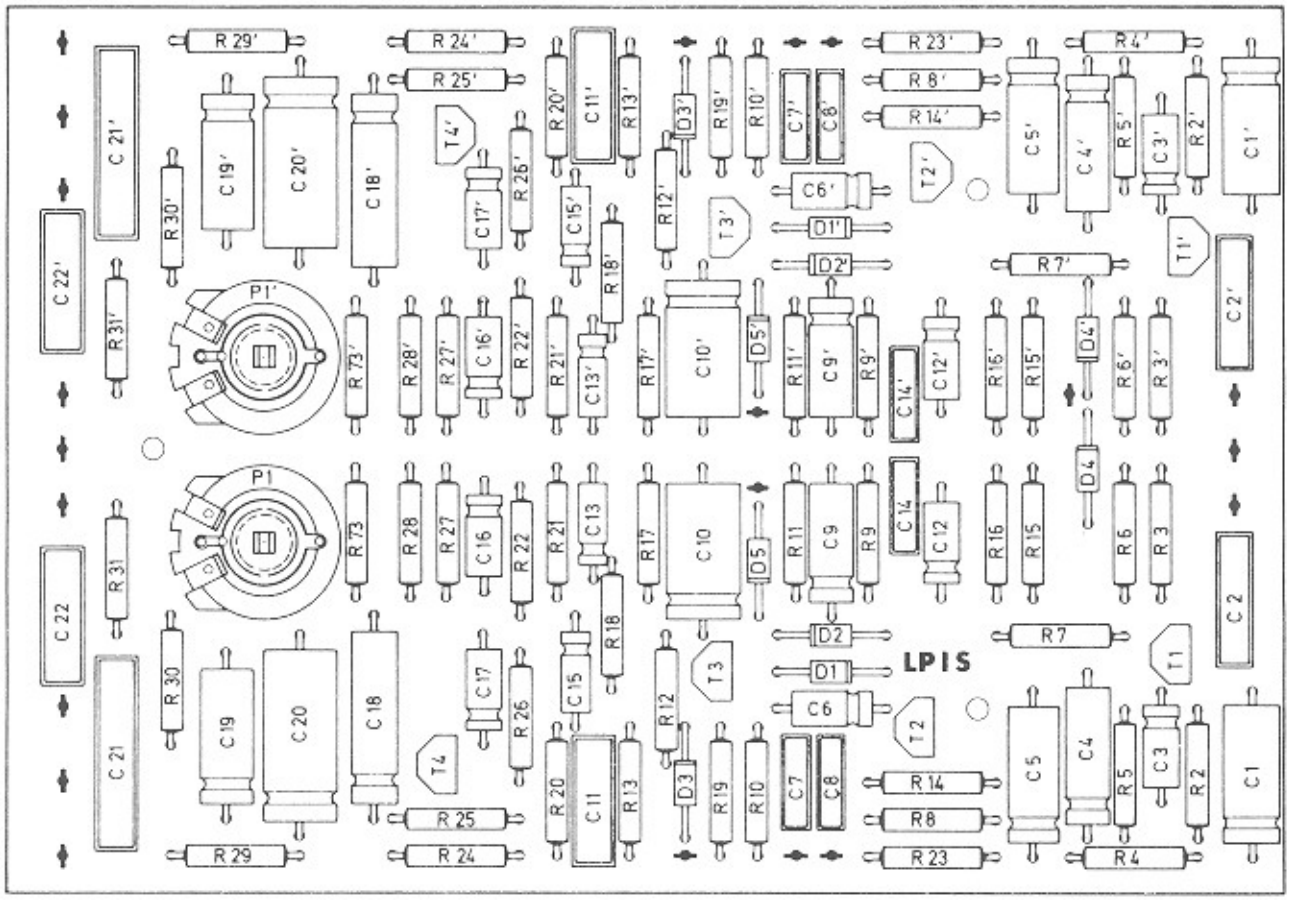

POSITION	DESCRIPTION		PART NUMBER	QTY	
	CONTINUED 1				
C 1/C 1'	LYTIC	50 Mfd/ 15 V	220101		
C 2/C 2'	MYLAR	0.1 Mfd250 V	220115		
C 3/C 3'	LYTIC	1 Mfd/ 35 V	220095		
C 4/C 4'	LYTIC	50 Mfd/ 15 V	220101		
C 5/C 5'	LYTIC	50 Mfd/ 25 V	220102		
C 6/C 6'	LYTIC	10 Mfd/ 10V	220097		
C 7/C 7'	MYLAR	0.033 Mfd/250 V	220113		
C 8/C 8'	MYLAR	0.015 Mfd/400 V	220111		
C 9/C 9'	LYTIC	100 Mfd/ 3 V	220104		
C10/C10'	LYTIC	250 Mfd/ 6 V	220106		
C11/C11'	MYLAR	0.22 Mfd/250 V	220077		
C12/C12'	LYTIC	25 Mfd/ 10 V	220099		
C13/C13'	LYTIC	25 Mfd/ 10 V	220099		
C14/C14'	MYLAR	0.01 Mfd/400 V	220110		
C15/C15'	LYTIC	5 Mfd/ 35 V	220096		
C16/C16'	LYTIC	10 Mfd/ 25 V	220098		
C17/C17'	LYTIC	10 Mfd/ 25 V	220098		
C18/C18'	LYTIC	50 Mfd/ 25 V	220102		
C19/C19'	LYTIC	10 Mfd/ 25 V	220098		
C20/C20'	LYTIC	100 Mfd/ 35 V	220105		
C21/C21'	MYLAR	0.68 Mfd/250 V	220132		
C22/C22'	MYLAR	0,22 Mfd/250 V	220077		
T 1/T 1'	TRANSISTOR	BC 149 B	221110		
T 2/T 2'	TRANSISTOR	BC 149 B	221110		
T 3/T 3'	TRANSISTOR	BC 147 B	221099		
T 4/T 4'	TRANSISTOR	BC 147 B	221099		
D 1/D 1'	SILICONE DIODE	1N 4004	221115		
D 2/D 2'	SILICONE DIODE	1N 4004	221115		
D 3/D 3'	SILICONE DIODE	1N 4004	221115		
D 4/D 4'	SILICONE DIODE	1N 4004	221115		
D 5/D 5'	SILICONE DIODE	1N 4004	221115		
P 1/P 1'	TRIMMER RESISTOR	500 OHM 0,3 W lin	221166		

SPARE PARTS LIST

Transistor - Amplifier 70 S

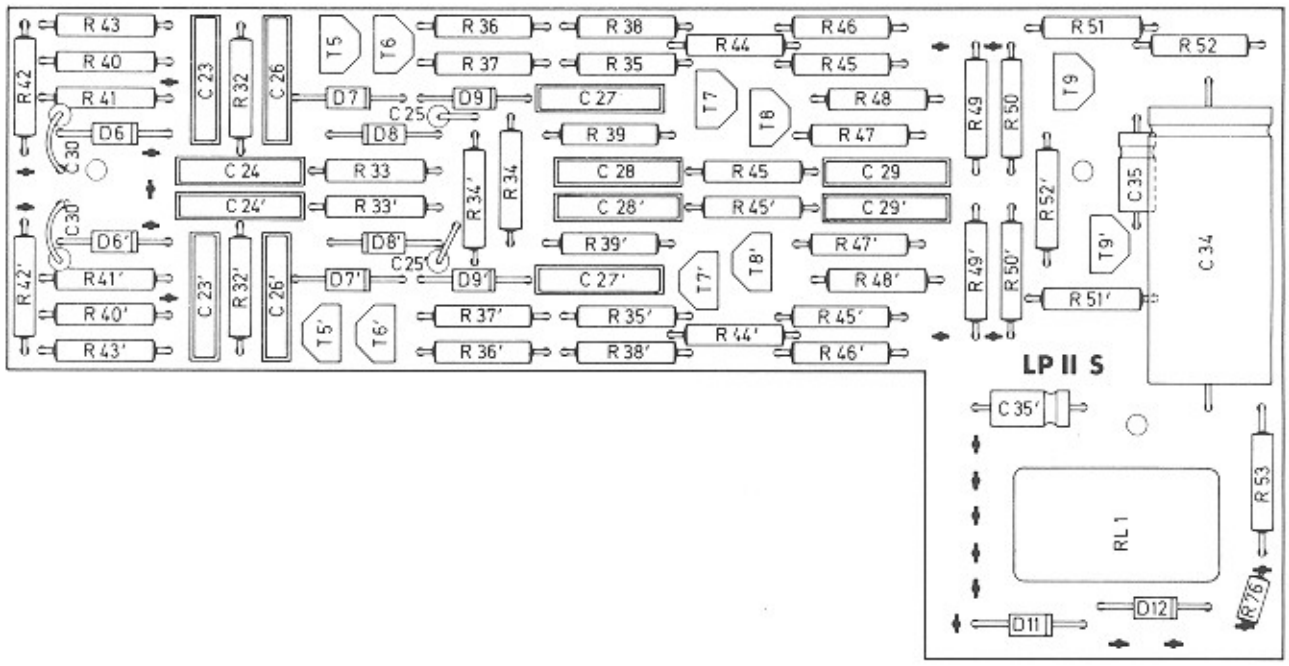

POSITION	DESCRIPTION			PART NUMBER	QTY	
	PLATE LP II S, ASSEMBLED			10155		
R32/R32'	CARBON RESISTOR	150 000	Ohm ⅓W ± 10%	221130		
R33/R33'	CARBON RESISTOR	150 000	Ohm ⅓W ± 10%	221130		
R34/R34'	CARBON RESISTOR	10 000	Ohm ⅓W ± 10%	221028		
R35/R35'	CARBON RESISTOR	1	Megohm ⅓W ± 10%	221008		
R36/R36'	CARBON RESISTOR	5 600	Ohm ⅓W ± 10%	221091		
R37/R37'	CARBON RESISTOR	68	Ohm ⅓W ± 10%	221189		
R38/R38'	CARBON RESISTOR	1	Megohm ⅓W ± 10%	221008		
R39/R39'	CARBON RESISTOR	220 000	Ohm ⅓W ± 10%	221205		
R40/R40'	CARBON RESISTOR	10 000	Ohm ⅓W ± 10%	221028		
R41/R41'	CARBON RESISTOR	15	Ohm ⅓W ± 10%	221181		
R42/R42'	CARBON RESISTOR	4 700	Ohm ⅓W ± 10%	221173		
R43/R43'	CARBON RESISTOR	4 700	Ohm ⅓W ± 10%	221173		
R44/R44'	CARBON RESISTOR	3 900	Ohm ⅓W ± 10%	221190		
R45/R45'	CARBON RESISTOR	1	Megohm ⅓W ± 10%	221008		
R46/R46'	CARBON RESISTOR	5 600	Ohm ⅓W ± 10%	221091		
R47/R47'	CARBON RESISTOR	68	Ohm ⅓W ± 10%	221189		
R48/R48'	CARBON RESISTOR	220 000	Ohm ⅓W ± 10%	221205		
R49/R49'	CARBON RESISTOR	150 000	Ohm ⅓W ± 10%	221130		
R50/R50'	CARBON RESISTOR	220 000	Ohm ⅓W ± 10%	221205		
R51/R51'	CARBON RESISTOR	5 600	Ohm ⅓W ± 10%	221091		
R52/R52'	CARBON RESISTOR	4 700	Ohm ⅓W ± 10%	221173		
R53	CARBON RESISTOR	1 500	Ohm ⅓W ± 10%	221026		
R54/R54'	CARBON RESISTOR	1	Megohm ⅓W ± 10%	221008		
R76	CARBON RESISTOR	1 000	Ohm ⅓W ± 10%	221183		

CONTINUED 1

SPARE PARTS LIST

Transistor - Amplifier 70 S

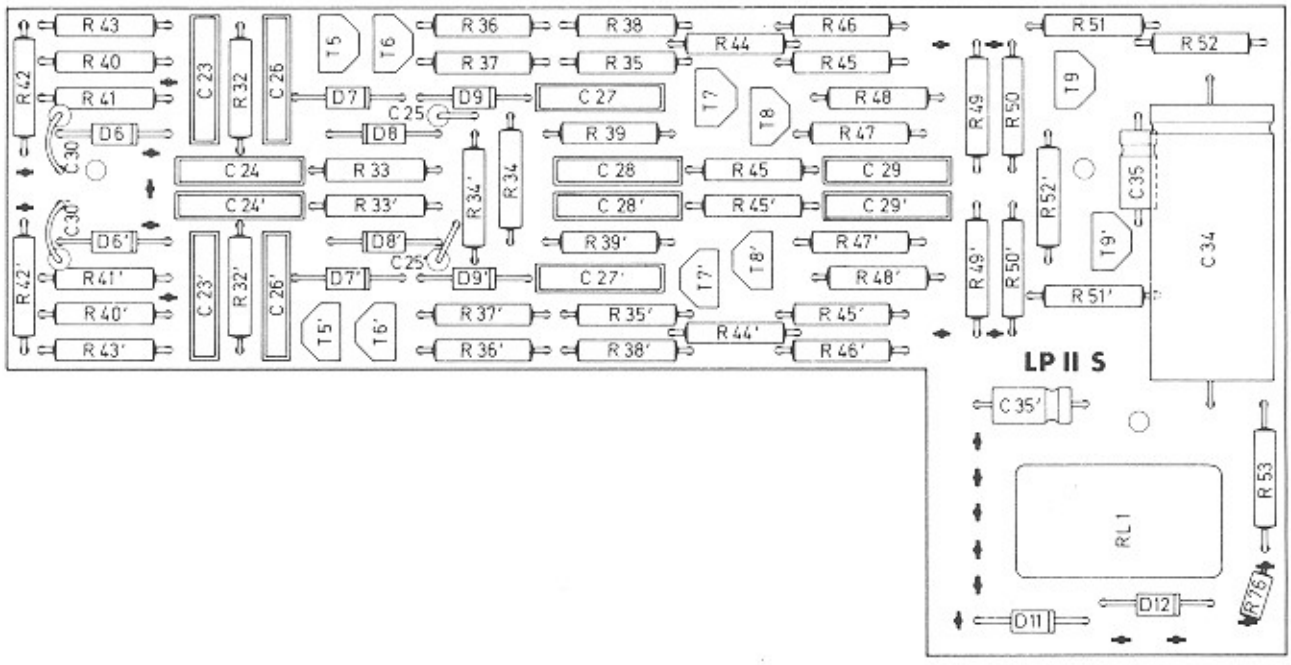

POSITION	DESCRIPTION			PART NUMBER	QTY	
	CONTINUED 1					
C23/C23'	MYLAR		0.1 Mfd/250 V	220115		
C24/C24'	MYLAR		0.1 Mfd/250 V	220115		
C25/C25'	LYTIC		5 Mfd/ 35 V	220096		
C26/C26'	MYLAR		0.1 Mfd/250 V	220115		
C27/C27'	MYLAR		0.1 Mfd/250 V	220115		
C28/C28'	MYLAR		0.1 Mfd/250 V	220115		
C29/C29'	MYLAR		0.1 Mfd/250 V	220115		
C30/C30'	LYTIC		250 Mfd/ 6 V	220106		
C34	LYTIC		1000 Mfd/ 35 V	220107		
C35/C35'	LYTIC		5 Mfd/ 35 V	220096		
T 5/T 5'	TRANSISTOR		BC 147 B	220099		
T 6/T 6'	TRANSISTOR		BC 147 B	220099		
T 7/T 7'	TRANSISTOR		BC 147 B	220099		
T 8/T 8'	TRANSISTOR		BC 147 B	220099		
T 9/T 9'	TRANSISTOR		BC 147 B	220099		
D 6/D 6'	SILICONE DIODE		1N 4148	221114		
D 7/D 7'	SILICONE DIODE		1N 4148	221114		
D 8/D 8'	SILICONE DIODE		1N 4148	221114		
D 9/D 9'	SILICONE DIODE		1N 4148	221114		
D11	SILICONE DIODE		1N 4004	221115		
D12	SILICONE DIODE		1N 4004	221115		
RL1	MUTING RELAY	V23154 -	N 0721 - B 110	223180		

SPARE PARTS LIST

Transistor - Amplifier 70 S

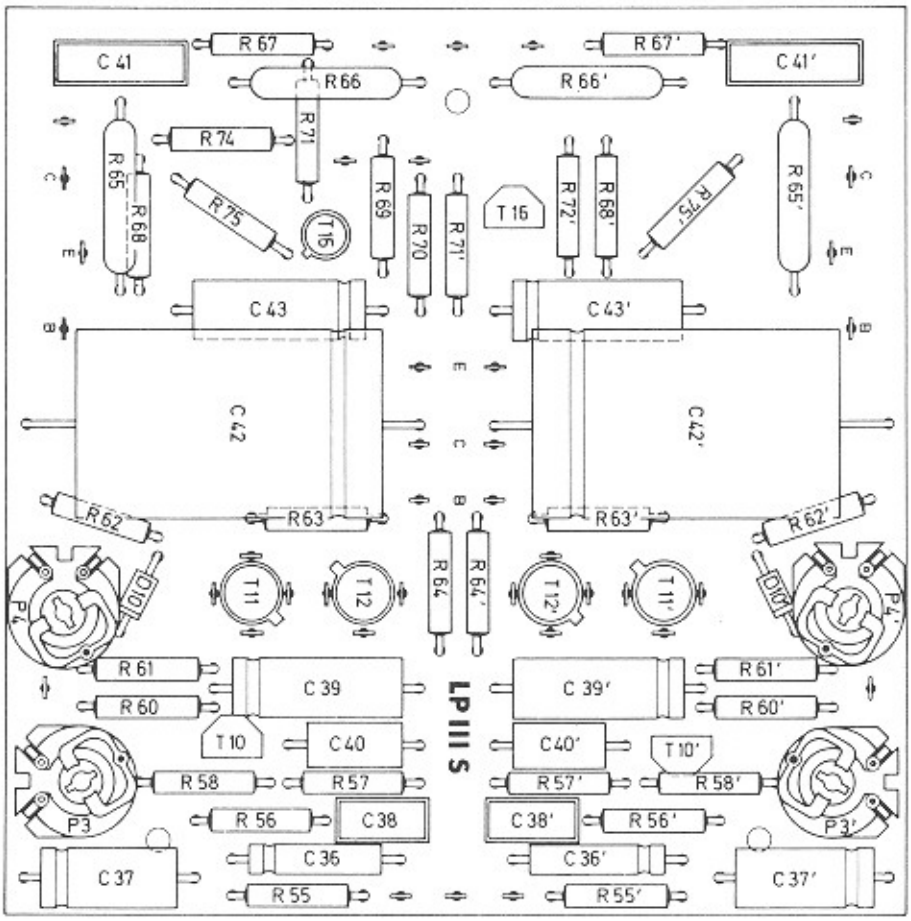

POSITION	DESCRIPTION			PART NUMBER	QTY
	PLATE LP III S, ASSEMBLED			10156	
R55/R55'	CARBON RESISTOR	1 000 Ohm	1/3W ± 10%	221025	
R56/R56'	CARBON RESISTOR	1 000 Ohm	1/3W ± 10%	221025	
R57/R57'	CARBON RESISTOR	1 200 Ohm	1/3W ± 10%	221021	
R58/R58'	CARBON RESISTOR	12 000 Ohm	1/3W ± 10%	221012	
R60/R60'	CARBON RESISTOR	1 000 Ohm	1/3W ± 10%	221025	
R61/R61'	CARBON RESISTOR	2 700 Ohm	1/3W ± 10%	221200	
R62/R62'	CARBON RESISTOR	560 Ohm	1/3W ± 10%	221191	
R63/R63'	CARBON RESISTOR	330 Ohm	1/3W ± 10%	221195	
R64/R64'	CARBON RESISTOR	330 Ohm	1/3W ± 10%	221195	
R65/R65'	WIRE RESISTOR	0.47 Ohm	2 W ± 10%	221156	
R66/R66'	WIRE RESISTOR	0.47 Ohm	2 W ± 10%	221156	
R67/R67'	CARBON RESISTOR	22 Ohm	1/3 W ± 10%	221187	
R68/R68'	CARBON RESISTOR	8 200 Ohm	1/3 W ± 5%	221202	
R69	CARBON RESISTOR	5 600 Ohm	1/3 W ± 5%	221014	
R70	CARBON RESISTOR	220 Ohm	1/3 W ± 5%	221137	
R71/R71'	CARBON RESISTOR	4 700 Ohm	1/3 W ± 5%	221173	
R72	CARBON RESISTOR	4 700 Ohm	1/3 W ± 5%	221173	
R74	CARBON RESISTOR	1 500 Ohm	1/3 W ± 5%	221199	
R75/R75'	CARBON RESISTOR	1 200 Ohm	1/3 W ± 5%	221021	

CONTINUED 1

SPARE PARTS LIST

Transistor - Amplifier 70 S

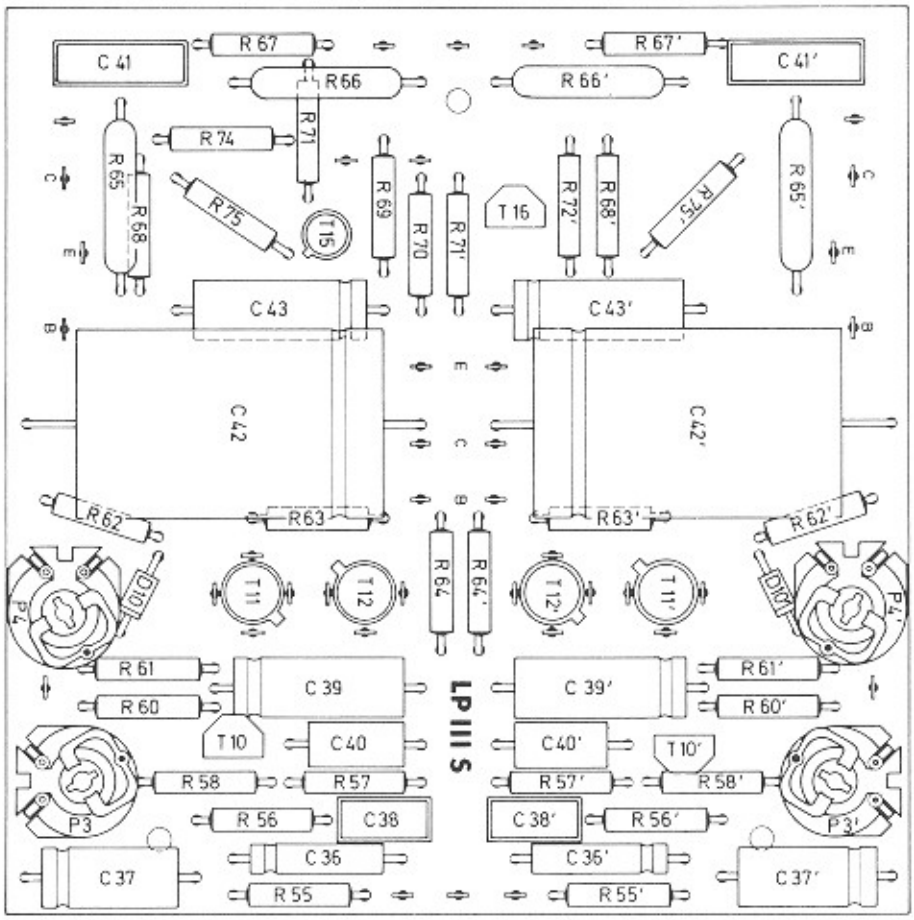

POSITION	DESCRIPTION		PART NUMBER	QTY	
	CONTINUED 1				
C36/C36'	LYTIC	25 Mfd 10 V	220099		
C37/C37'	LYTIC	25 Mfd/ 35 V	220100		
C38/C38'	MYLAR	0.01 Mfd/400 V	220110		
C39/C39'	LYTIC	50 Mfd/ 35 V	220103		
C40/C40'	MYLAR	0.001 Mfd/160 V	220118		
C41/C41'	MYLAR	0.22 Mfd/250 V	220077		
C42/C42'	LYTIC	2500 Mfd/35/40 V	220 108		
C43/C43'	LYTIC	250 Mfd/ 6 V	220106		
T10/T10'	TRANSISTOR	BC 147 B	221099		
T11/T11'	TRANSISTOR	40361 RCA	221107		
T12/T12'	TRANSISTOR	40362 RCA	221108		
T15	TRANSISTOR	BC 177 VI/BC 157 A	221111		
T16	TRANSISTOR	BC 147 B	221099		
D10/D10'	ZENERDIODE	BZY 85 C4 V7	221113		
P 3/P 3'	TRIMMER RESISTOR	500 K ohm	221157		
P 4/P 4'	TRIMMER RESISTOR	2,5 K ohm	221158		

SPARE PARTS LIST

Transistor - Amplifier 35 M

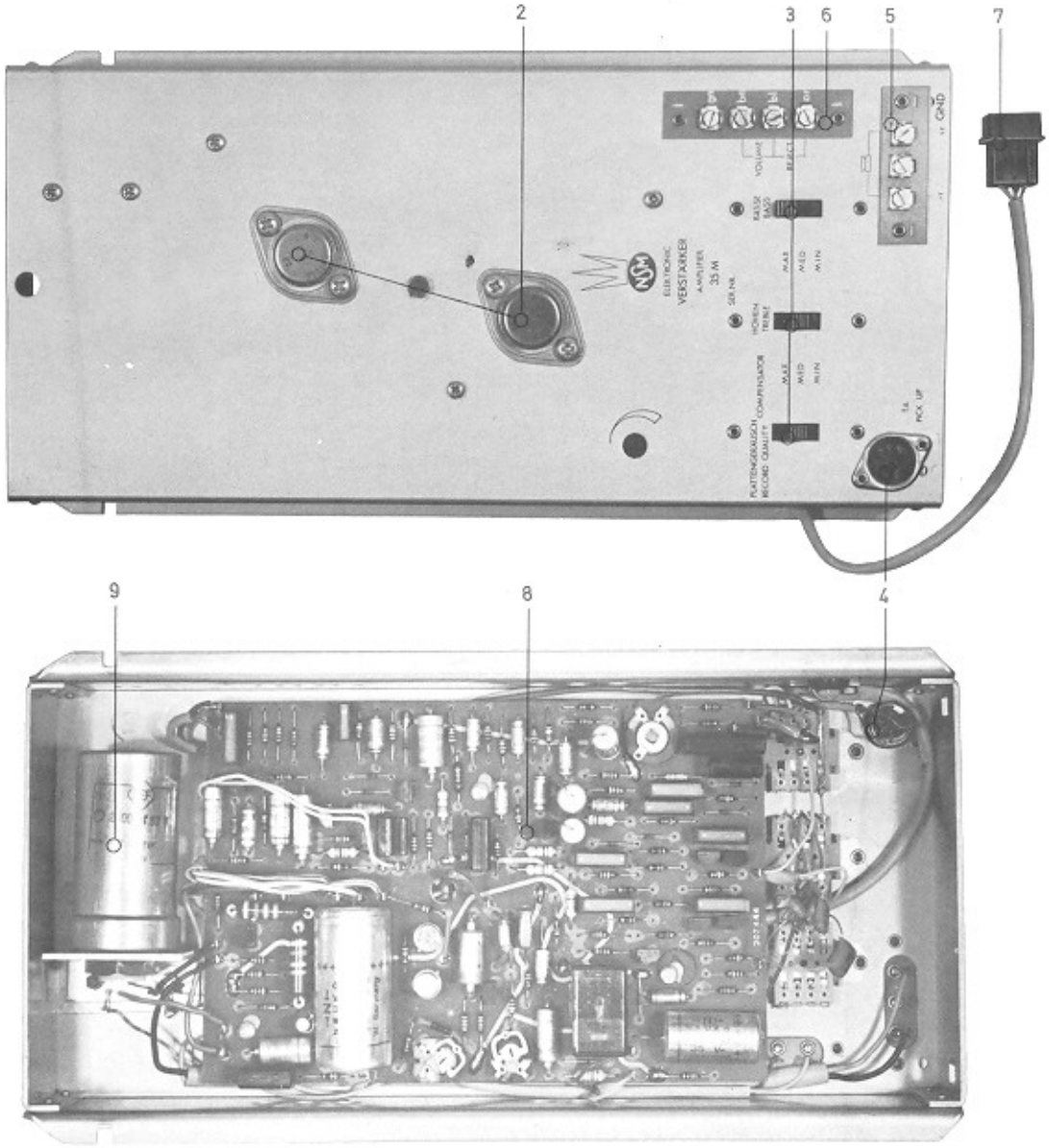

POSITION	DESCRIPTION	PART NUMBER	QTY	
1	AMPLIFIER ASSEMBLY	41600	1	
2	-POWER TRANSISTOR 2N 3055 RCA	221106	2	
3	-SLIDERSWITCH	222151	3	
4	-METAL SOCKET MAB 3 S	225030	1	
5	-CONNECTOR PLATE, OUTPUT	222257	1	
6	-CONNECTOR PLATE, REMOTE CONTROL	222206	1	
7	-AMP PLUG 3 PRONG	225175	1	
8	-PRINTED CIRCUIT PLATE SEE PAGE VM 100			
9	-ELKO 2500 MF/70 V	220135	1	
9	BRACKET FOR CAPACITOR	23354	1	

SPARE PARTS LIST

Transistor - Amplifier 35 M

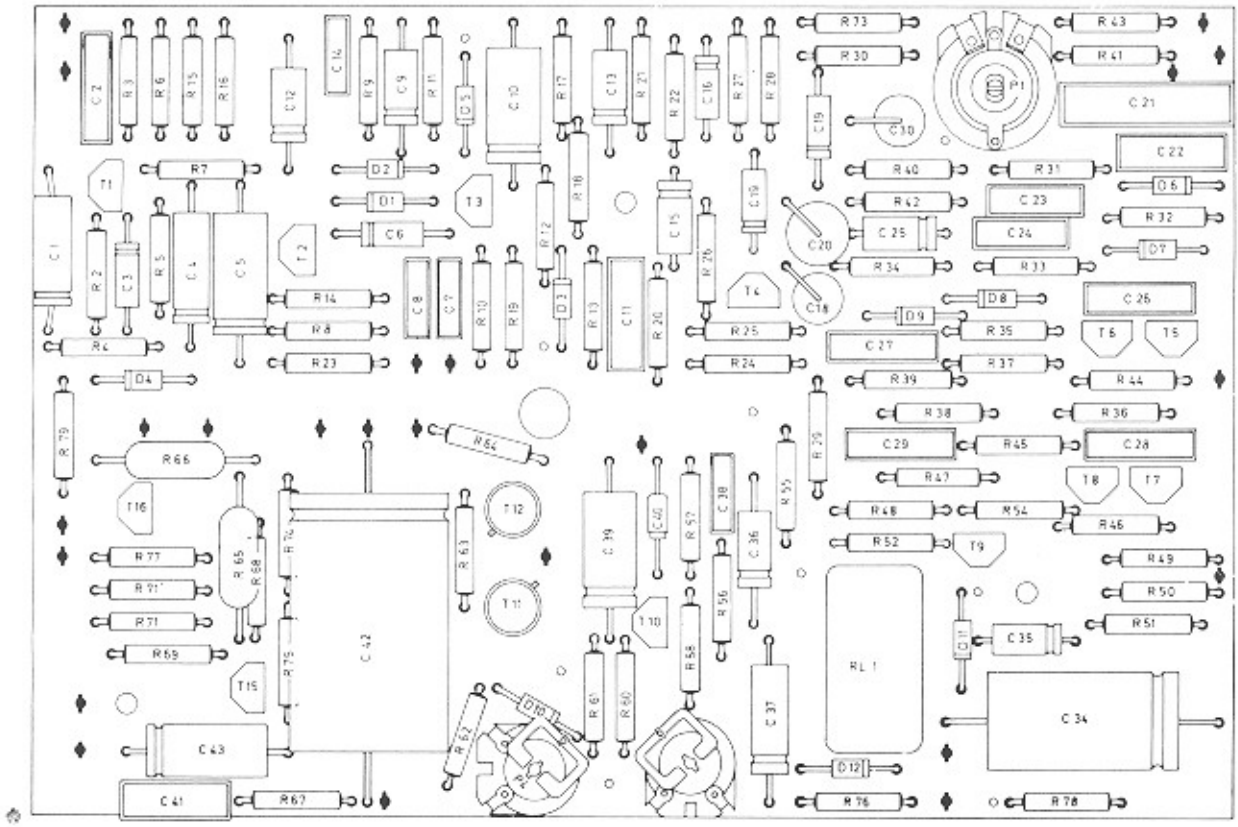

POSITION	DESCRIPTION		PART NUMBER	QTY
	PLATE ASSEMBLED		41685	
R 2	CARBON RESISTOR	2 Megohm ⅓W ± 10%		
R 3	CARBON RESISTOR	8 200 Ohm ⅓W ± 10%		
R 4	CARBON RESISTOR	3 300 Ohm ⅓W ± 10%		
R 5	CARBON RESISTOR	1 Megohm ⅓W ± 10%		
R 6	CARBON RESISTOR	120 000 Ohm ⅓W ± 10%		
R 7	CARBON RESISTOR	27 000 Ohm ⅓W ± 10%		
R 8	CARBON RESISTOR	1 000 Ohm ⅓W ± 10%		
R 9	CARBON RESISTOR	3 900 Ohm ⅓W ± 10%		
R10	CARBON RESISTOR	82 000 Ohm ⅓W ± 10%		
R11	CARBON RESISTOR	390 000 Ohm ⅓W ± 10%		
R12	CARBON RESISTOR	10 000 Ohm ⅓W ± 10%		
R13	CARBON RESISTOR	8 200 Ohm ⅓W ± 10%		
R14	CARBON RESISTOR	22 000 Ohm ⅓W ± 10%		
R15	CARBON RESISTOR	2 700 Ohm ⅓W ± 10%		
R16	CARBON RESISTOR	560 Ohm ⅓W ± 10%		
R17	CARBON RESISTOR	4 700 Ohm ⅓W ± 10%		
R18	CARBON RESISTOR	120 Ohm ⅓W ± 10%		
R19	CARBON RESISTOR	27 000 Ohm ⅓W ± 10%		
R20	CARBON RESISTOR	820 000 Ohm ⅓W ± 10%		
R21	CARBON RESISTOR	120 000 Ohm ⅓W ± 10%		
R22	CARBON RESISTOR	82 000 Ohm ⅓W ± 10%		
R23	CARBON RESISTOR	10 000 Ohm ⅓W ± 10%		
R24	CARBON RESISTOR	10 000 Ohm ⅓W ± 10%		
R25	CARBON RESISTOR	10 000 Ohm ⅓W ± 10%		
R26	CARBON RESISTOR	100 000 Ohm ⅓W ± 10%		
R27	CARBON RESISTOR	120 000 Ohm ⅓W ± 10%		
R28	CARBON RESISTOR	3 900 Ohm ⅓W ± 10%		
R29	CARBON RESISTOR	10 000 Ohm ⅓W ± 10%		
R30	CARBON RESISTOR	2 200 Ohm ⅓W ± 10%		
R31	CARBON RESISTOR	22 000 Ohm ⅓W ± 10%		
R32	CARBON RESISTOR	150 000 Ohm ⅓W ± 10%		
R33	CARBON RESISTOR	150 000 Ohm ⅓W ± 10%		
R34	CARBON RESISTOR	10 000 Ohm ⅓W ± 10%		
R35	CARBON RESISTOR	1 Megohm ⅓W ± 10%		
R36	CARBON RESISTOR	5 600 Ohm ⅓W ± 10%		
R37	CARBON RESISTOR	68 Ohm ⅓W ± 10%		
R38	CARBON RESISTOR	1 Megohm ⅓W ± 10%		
R39	CARBON RESISTOR	220 000 Ohm ⅓W ± 10%		
R40	CARBON RESISTOR	4 700 Ohm ⅓W ± 10%		

CONTINUED 1

SPARE PARTS LIST

Transistor - Amplifier 35 M

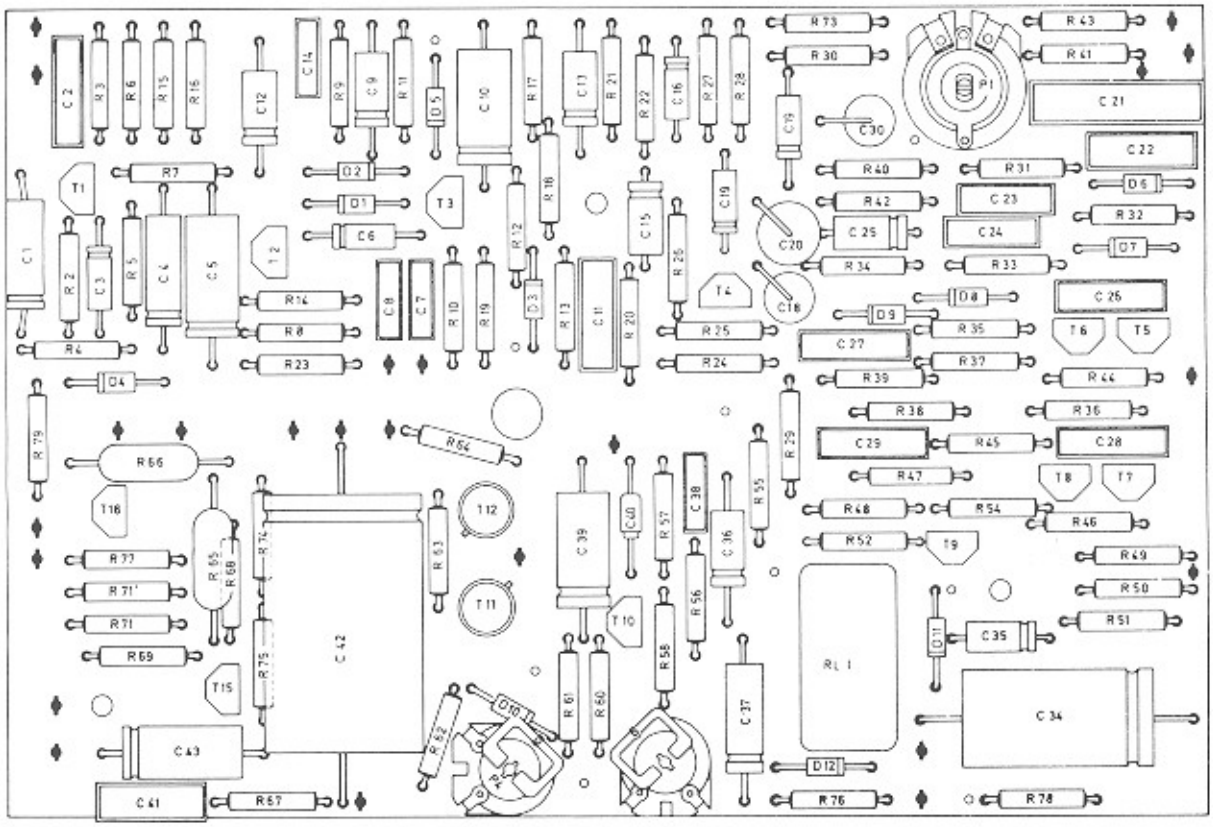

POSITION	DESCRIPTION			PART NUMBER	QTY
	CONTINUED 1				
R41	CARBON RESISTOR	15 Ohm	1/3W ± 10%		
R42	CARBON RESISTOR	4 700 Ohm	1/3W ± 10%		
R43	CARBON RESISTOR	4 700 Ohm	1/3W ± 10%		
R44	CARBON RESISTOR	3 900 Ohm	1/3W ± 10%		
R45	CARBON RESISTOR	1 Megohm	1/3W ± 10%		
R46	CARBON RESISTOR	5 600 Ohm	1/3W ± 10%		
R47	CARBON RESISTOR	68 Ohm	1/3W ± 10%		
R48	CARBON RESISTOR	220 000 Ohm	1/3W ± 10%		
R49	CARBON RESISTOR	150 000 Ohm	1/3W ± 10%		
R50	CARBON RESISTOR	220 000 Ohm	1/3W ± 10%		
R51	CARBON RESISTOR	5 600 Ohm	1/3W ± 10%		
R52	CARBON RESISTOR	4 700 Ohm	1/3W ± 10%		
R54	CARBON RESISTOR	1 Megohm	1/3W ± 10%		
R55	CARBON RESISTOR	1 000 Ohm	1/3W ± 10%		
R56	CARBON RESISTOR	1 000 Ohm	1/3W ± 10%		
R57	CARBON RESISTOR	1 200 Ohm	1/3W ± 10%		
R58	CARBON RESISTOR	12 000 Ohm	1/3W ± 10%		
R60	CARBON RESISTOR	1 800 Ohm	1/3W ± 10%		
R61	CARBON RESISTOR	2 700 Ohm	1/3W ± 10%		
R62	CARBON RESISTOR	560 Ohm	1/3W ± 10%		
R63	CARBON RESISTOR	330 Ohm	1/3W ± 10%		
R64	CARBON RESISTOR	330 Ohm	1/3W ± 10%		
R65	WIRE RESISTOR	0.47 Ohm	2 W ± 10%		
R66	WIRE RESISTOR	0.47 Ohm	2 W ± 10%		
R67	CARBON RESISTOR	22 Ohm	1/3W ± 10%		
R68	CARBON RESISTOR	8 200 Ohm	1/3W ± 5%		
R69	CARBON RESISTOR	5 600 Ohm	1/3W ± 5%		
R71/R71'	CARBON RESISTOR	4 700 Ohm	1/3W ± 5%		
R73	CARBON RESISTOR	68 Ohm	1/3W ± 10%		
R74	CARBON RESISTOR	1 000 Ohm	1/3W ± 5%		
R75	CARBON RESISTOR	1 200 Ohm	1/3W ± 5%		
R76	CARBON RESISTOR	1 000 Ohm	1/3W ± 10%		
R77	CARBON RESISTOR	4 700 Ohm	1/3W ± 10%		
R78	CARBON RESISTOR	3 300 Ohm	1/3W ± 10%		
R79	CARBON RESISTOR	180 Ohm	1/3W ± 5%		
RL1	MUTE RELAY	V23154—	NO 721—B110		
			CONTINUED 2		

SPARE PARTS LIST

Transistor - Amplifier 35 M

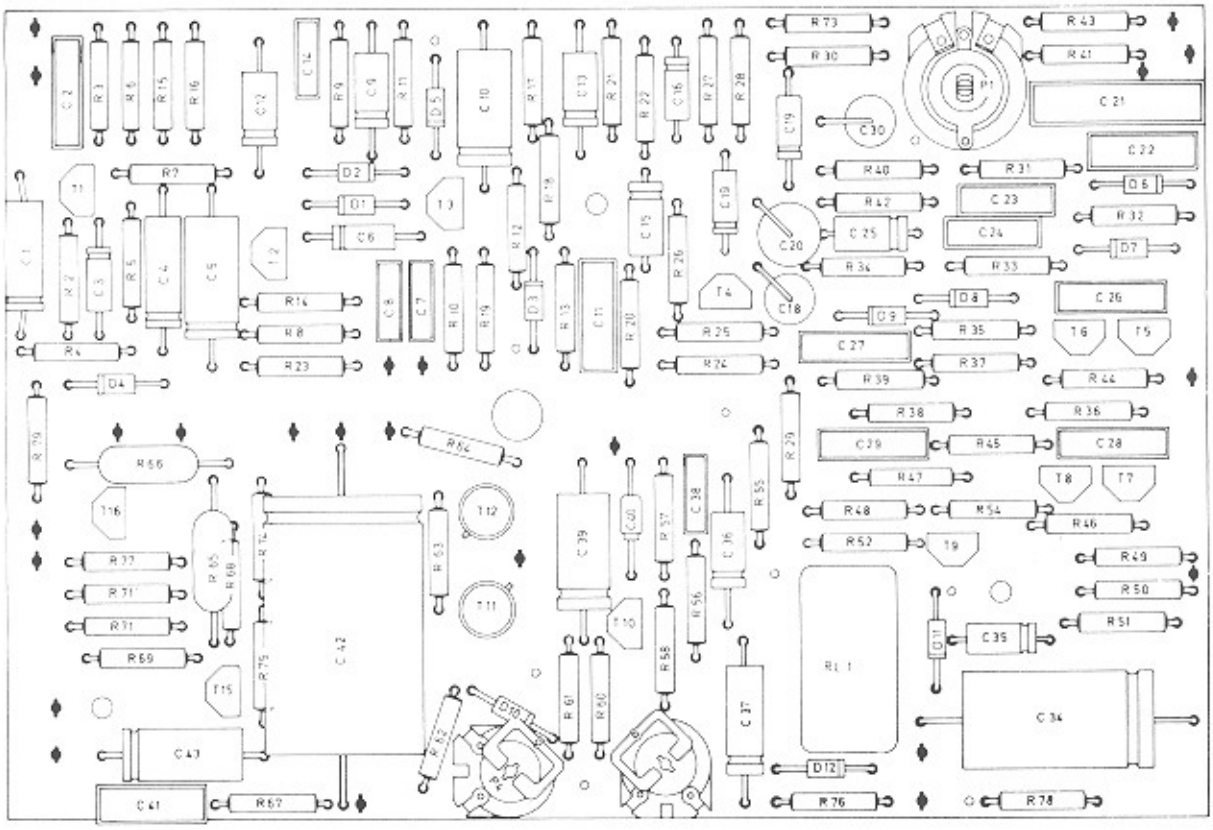

POSITION	DESCRIPTION		PART NUMBER	QTY
	CONTINUED 2			
P 1	TRIMMER RESISTOR	250 Ohm ⅓W lin.		
P 3	ADJUSTING RESISTOR	500 000 Ohm, lin.		
P 4	ADJUSTING RESISTOR	2 500 Ohm, lin.		
C 1	LYTIC	50 Mfd		
C 2	MYLAR	0.1 Mfd		
C 3	LYTIC	1 Mfd/35V		
C 4	LYTIC	50 Mfd/15 V		
C 5	LYTIC	50 Mfd/25 V		
C 6	LYTIC	10 Mfd		
C 7	MYLAR	0.033 Mfd		
C 8	MYLAR	0.015 Mfd/400 V		
C 9	LYTIC	100 Mfd/ 3 V		
C10	LYTIC	250 Mfd/ 6 V		
C11	MYLAR	0.22 Mfd		
C12	LYTIC	25 Mfd/ 10 V		
C13	LYTIC	25 Mfd/ 10 V		
C14	MYLAR	0.01 Mfd		
C15	LYTIC	5 Mfd/ 35 V		
C16	LYTIC	10 Mfd/ 25 V		
C17	LYTIC	10 Mfd/ 25 V		
C18	LYTIC	50 Mfd/ 25 V		
C19	LYTIC	10 Mfd/ 25 V		
C20	LYTIC	100 Mfd/ 35 V		
C21	MYLAR	0.68 Mfd		
C22	MYLAR	0.22 Mfd		
C23	MYLAR	0.1 Mfd		
C24	MYLAR	0.1 Mfd		
C25	LYTIC	5 Mfd/ 35 V		
C26	MYLAR	0.1 Mfd		
C27	MYLAR	0.1 Mfd		
C28	MYLAR	0.1 Mfd		
C29	MYLAR	0.1 Mfd		
C30	LYTIC	250 Mfd/ 6 V		
C31	MYLAR	0.01 Mfd		
C32	MYLAR	0.033 Mfd		
C33	MYLAR	0.1 Mfd		
C34	LYTIC	500 Mfd		
C35	LYTIC	5 Mfd/ 35 V		
		CONTINUED 3		

SPARE PARTS LIST

Transistor - Amplifier 35 M

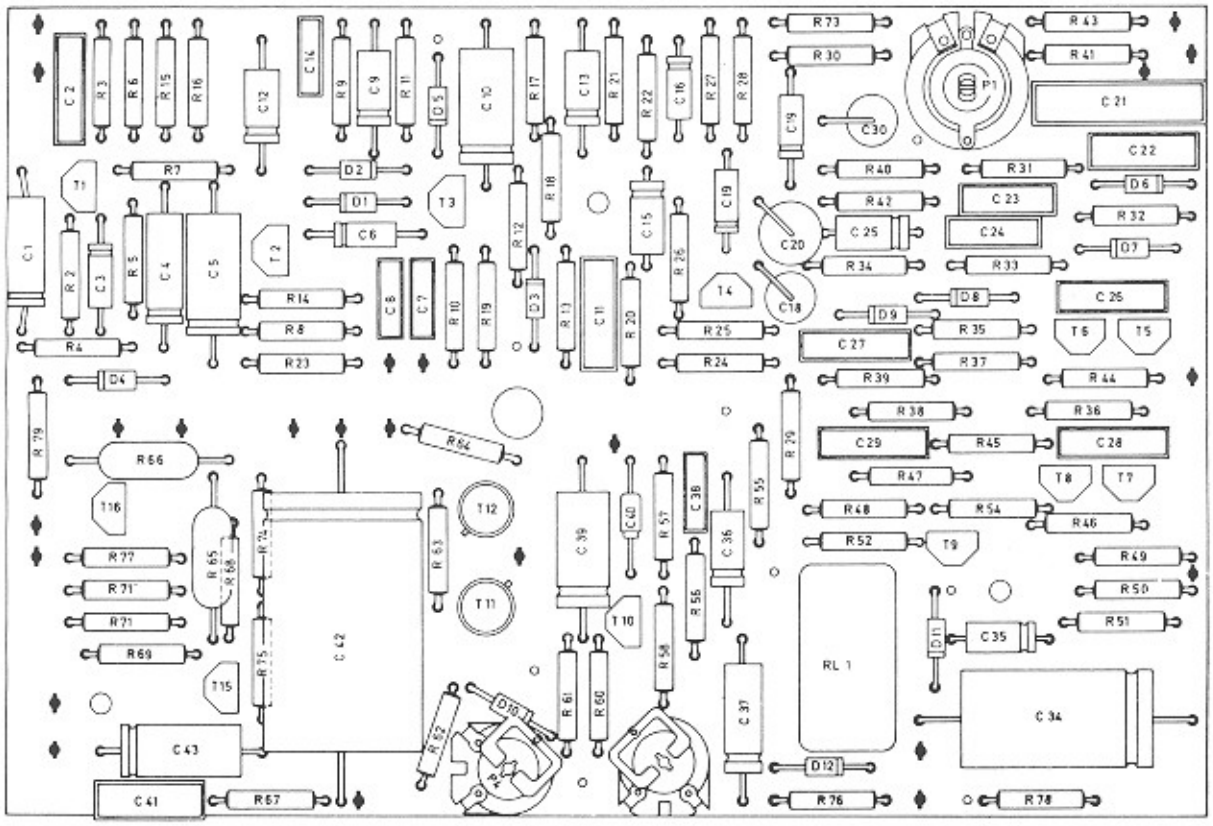

POSITION	DESCRIPTION		PART NUMBER	QTY	
	CONTINUED 3				
C36	LYTIC	25 Mfd/ 10 V			
C37	LYTIC	25 Mfd/ 35 V			
C38	MYLAR	0.01 Mfd			
C39	LYTIC	50 Mfd/ 35 V			
C40	MYLAR	0.001 Mfd/160 V			
C41	MYLAR	0.22 Mfd			
C42	LYTIC	2500 Mfd/ 35 V			
C43	LYTIC	250 Mfd/ 6 V			
C80	LYTIC	2500 Mfd/ 70 V			
D 1	SILICON DIODE	1 N 4148			
D 2	SILICON DIODE	1 N 4148			
D 3	SILICON DIODE	1 N 4148			
D 4	SILICON DIODE	1 N 4148			
D 5	SILICON DIODE	1 N 4148			
D 6	SILICON DIODE	1 N 4148			
D 7	SILICON DIODE	1 N 4148			
D 8	SILICON DIODE	1 N 4148			
D 9	SILICON DIODE	1 N 4148			
D10	ZENER DIODE	BZY 85 C4 V7			
D11	SILICON DIODE	1 N 4148			
D12	SILICON DIODE	1 N 4148			
T 1	TRANSISTOR	BC 149 B			
T 2	TRANSISTOR	BC 149 B			
T 3	TRANSISTOR	BC 147 B			
T 4	TRANSISTOR	BC 147 B			
T 5	TRANSISTOR	BC 147 B			
T 6	TRANSISTOR	BC 147 B			
T 7	TRANSISTOR	BC 147 B			
T 8	TRANSISTOR	BC 147 B			
T 9	TRANSISTOR	BC 147 B			
T10	TRANSISTOR	BC 147 B			
T11	TRANSISTOR	40361 RCA			
T12	TRANSISTOR	40362 RCA			
T13	TRANSISTOR	2N 3055 RCA			
T14	TRANSISTOR	2N 3055 RCA			
T15	TRANSISTOR	BC 177 VI/BC 157 A			
T16	TRANSISTOR	BC 147 B			

SPARE PARTS LIST

Cable Harnesses

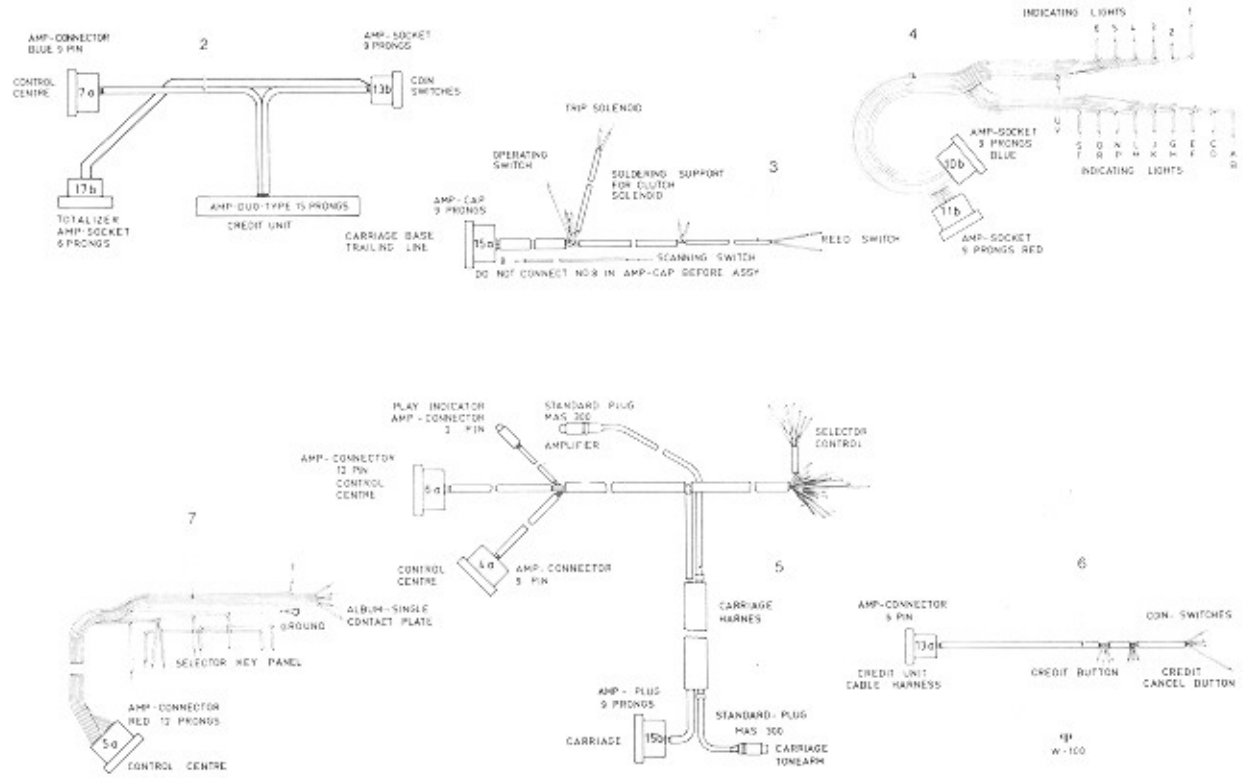

POSITION	DESCRIPTION	PART NUMBER	QTY
1	CABLE HARNESSES		
2	-CABLE HARNESS CREDIT UNIT LEAD WIRE	41582	1
3	-CABLE HARNESS CARRIAGE	41507	1
4	-CABLE HARNESS SELECTION PLAYING INDICATOR	41672	1
5	-CABLE HARNESS SELECTOR CONTROL	41600	1
6	-CABLE HARNESS COIN SWITCHES	41577	1
7	-CABLE HARNESS CONTROL FOR SELECTOR KEY	41605	1

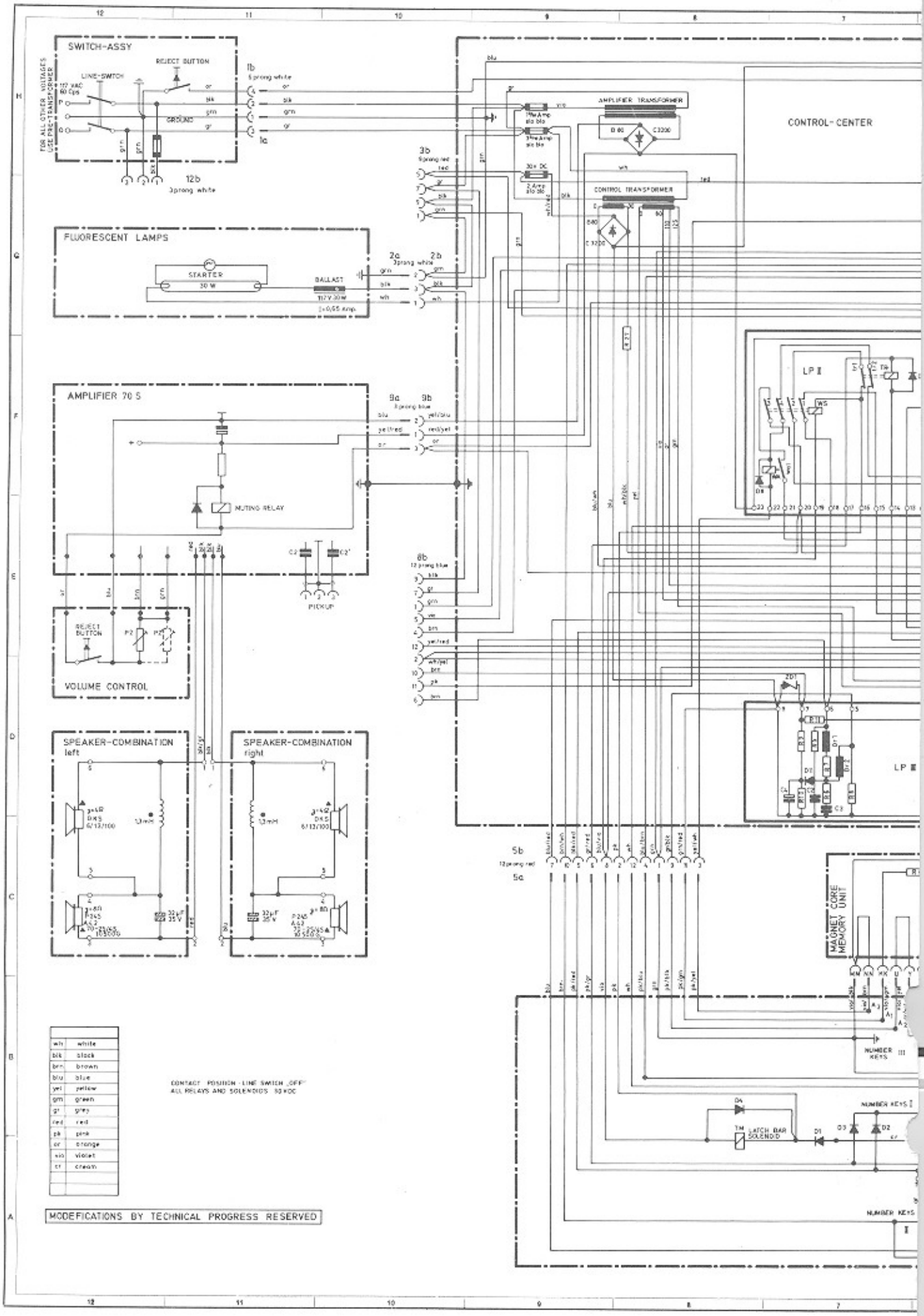
SWITCH-ASSY
REJECT BUTTON
LINE-SWITCH
GROUND
1b
5 prong white
1a
12b
3 prong white
FOR ALL OTHER VOLTAGES USE PRE-TRANSFORMER
FLUORESCENT LAMPS
STARTER
30 W
BALLAST
2a
3 prong white
2b
AMPLIFIER 70 S
9a
9b
3 prong blue
MUTING RELAY
PICKUP
REJECT BUTTON
VOLUME CONTROL
SPEAKER-COMBINATION left
SPEAKER-COMBINATION right
AMPLIFIER TRANSFORMER
CONTROL TRANSFORMER
CONTROL-CENTER
8b
12 prong blue
LP II
LP III
5b
12 prong red
5a
MAGNET CORE MEMORY UNIT
NUMBER KEYS III
NUMBER KEYS II
NUMBER KEYS I
LATCH BAR SOLENOID
wh white
blk black
brn brown
blu blue
yel yellow
grn green
gr grey
red red
pk pink
or orange
vio violet
cr cream
CONTACT POSITION - LINE SWITCH „OFF"
ALL RELAYS AND SOLENOIDS 50 VDC
MODEFICATIONS BY TECHNICAL PROGRESS RESERVED

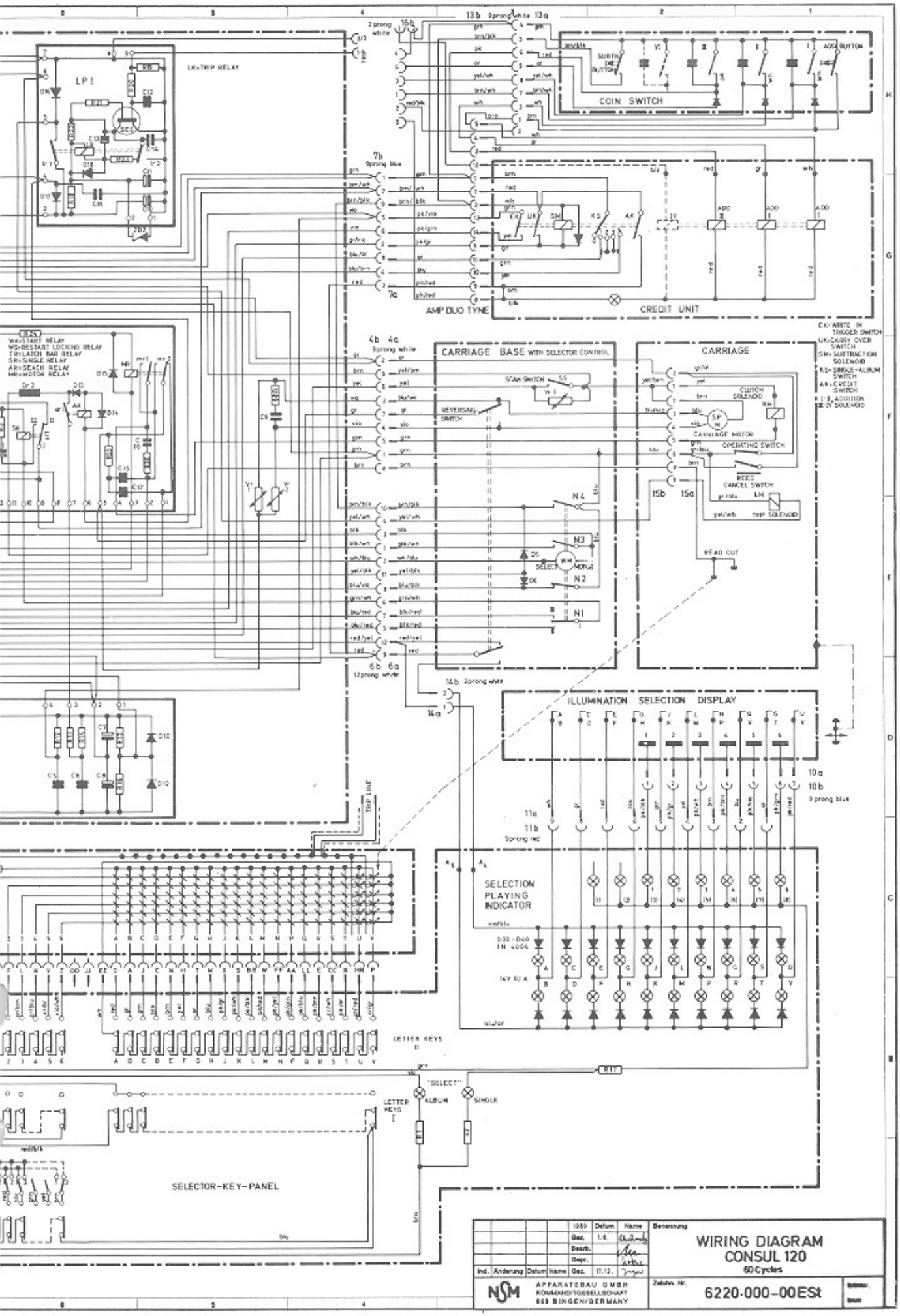

						1959	Datum	Name	Benennung
						Gez.	1.6.		WIRING DIAGRAM CONSUL 120
						Bearb.			60 Cycles
						Gepr.			
Ind.	Änderung	Datum	Name	Ges.	17.12.				Zeichn. Nr. 6220-000-00 ESt

NSM APPARATEBAU GMBH KOMMANDITGESELLSCHAFT 653 BINGEN/GERMANY