# CONSUL 120

**60 cycles**

# INSTALLATION OF THE PHONOGRAPH CONSUL 120

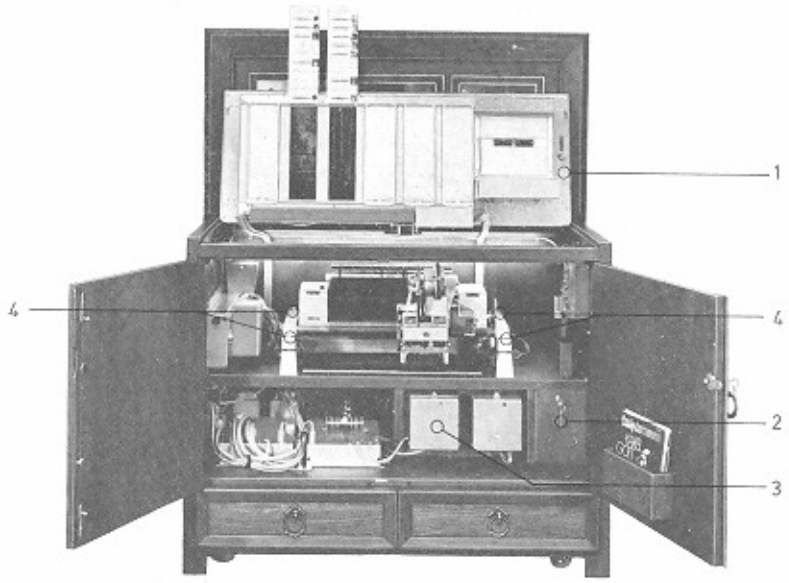


Fig. 1

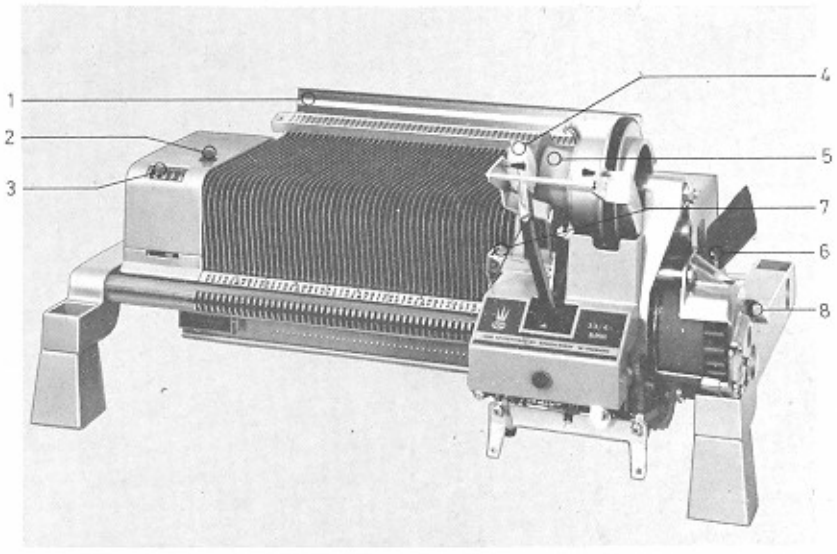


Fig. 2

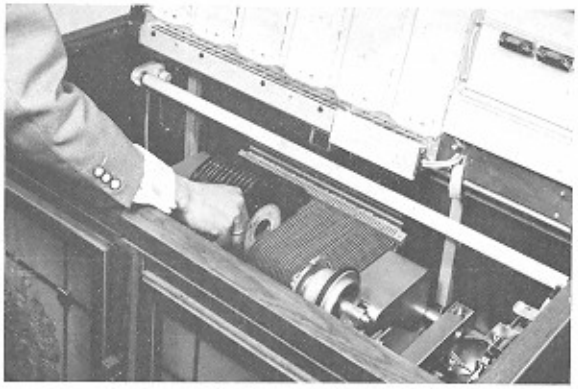

Fig. 3

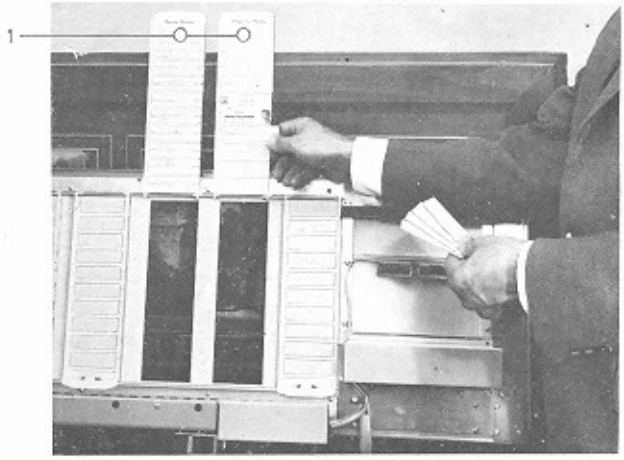


Fig. 4



**See instructions next page** ⟶

# PLEASE READ INSTRUCTIONS BEFORE INSTALLATION

## GENERAL

1. If external damage due to transport is noticed, this should at once be recorded on the delivery note and endorsed by the person making the delivery (Forwarding Agent, Railways, etc.). The manufacturer is not liable for damage caused during transit.

2. Devices for the safety and protection during transit must be removed before switching the phonograph on. They must, however, be refitted in the event of further transit.

3. All standard models of the phonographs are for a line voltage of 117 V/60 cycles.

4. The box is supplied with a 3-core line cable. Green-yellow must be connected to earth, corresponding to international wire code.

5. The proper functioning of the phonograph necessitates it to be horizontally and vertically levelled.

## INSTALLATION OF THE PHONOGRAPH

1. Remove cabinet keys located at the front door.

2. Lift the top lid of the cabinet.

3. Unlock and open right front door. Unlatch top and bottom of left front door by depressing spring loaded latch. Unlatch lid containing program holder (figure 1-1).

4. To loosen carriage, remove screws painted red (figure 2-6 and 8) on the right hand sjde of the carrige base. Turn the security lever on the left hand side of carriage clockwise.

5. To loosen record clamp arm, remove rubber ring (figure 2-5) and rubber wedge (figure 2-7).

6. To free pick-up arm, remove rubber band, but leave the stylus cover on (figure 2-4) in order to protect the diamonds.

7. To loosen carriage base, unscrew four nuts (figure 1-4) up to the catch.

8. ATTENTION: Check mains voltage before connecting! After plugging mains plug into the wall socket, switch on line switch on the back of the cabinet. (Fluorescent lamps should now light up.)

9. By depressing the scan button (figure 2-2) let the carriage move from its rest position on the right to the left and remove card board strip out of groove.

10. Seize handle at the bottom of the title strip holder section (figure 4-1) and lift up title strip holders.

11. Open cash box, title strips will be found in the cash bag. After lettering the title strips, insert same in the desired succession into the title holders A—V. After adjustment arrange in proper order the "ALBUM" title strips.

12. Insert records into record magazine (figure 3) in the order of the title strips, the upper lettering of the magazine marking to the left. Move carriage by pushing it by Hand to any desired position.

13. Remove stylus covers from cartridge. (Save the covers for later use.)

14. Slightly press lid containing program holder downwards till it latches in.

15. Lock cash box and remove key (figure 1-2).

16. Close front doors and lock cabinet.

17. IMPORTANT WHEN TAKING OUT CARRIAGE. Also on this model, the carriage can be taken out for servicing. In case the carriage has to be taken out, make shure that the security lever on the left hand side is completely turned to the back. Lift locking levers (2), located on both sides of carriage, with both hands. When inserting carriage, follow reserve procedure.

18. IN CASE OF TRANSIT: move carriage to the extreme right and insert safety screws. All other safety and protection devices have to be mounted contrary to above described sequence.

## CONTROL AND SERVICE SWITCHES:

Credit Button: Free play button, each pulse gives one credit. Located on inside of the right hand side of the cabinet — the upper button on coin acceptor assembly.

Credit Cancel Button: All credits can be cancelled. Located on inside of the right hand side of the cabinet — the lower button on the coin acceptor assembly.

Record Reject: By holding the button down for 1.5 seconds, any record can be rejected before end of play. Locations: one is located on the back left hand corner of the cabinet and one is on the control box.

Scan Button: permits travel of the carriage to any desired place. Located at the left hand side of carriage base.

## TAKING INTO OPERATION:

After inserting coin for single play, the single indicator lights up. After inserting coin for ALBUM play, the ALBUM indicator lights up. If both indicator lights are lit Album or Single Plays may be selected. When only Single indicator light is lit, only Single Play can be selected. After selection has been made, selection light will go out. Bent coins or slugs will — either immediately or after pressing the coin reject button — drop into the coin return cup.

The corresponding letter and number buttons are to be pressed. It is immaterial, which button will be pressed first. After the selection has been made, the buttons will be released. The selected and now playing record is being indicated by lighted figure- and letter-fields on the green panel.

The control box is fitted with a volume control and one reject button. The volume of both channels can be adjusted together. Upon request volume control box R2 for separate volume control is available.

In case of low volume the bass will automatically be reproduced louder (physiological volume control).

The control box is mounted at the back of the cabinet. It can easily be taken out and used as a remote control. (Cover hole with protection plate.)
A 3 core shielded or unshielded cable can be used (at separate control 4 wire cable).
Therefore connection is possible at any location where remote control cable is on hand.
The remote control cable has to be connected to the corresponding terminals between amplifier and volume control box.

The box is equipped with a new type popularity meter (figure 2-1) that indicates — easily detectable — the playing frequency of each record. The popularity meter can — by one simple movement of the lever — be reset to "0".

The total play meter is located on the left hand side of the carriage base (figure 2-3).

Used or damaged diamonds can — together with their holders — easily be removed from the cartridge without any tools and be replaced by new ones.

## CREDIT UNIT:

In order to alter credits, the corresponding wheel together with the needed slot have to be placed on the drive pin. For ex.:

1 play — slot nr. 1
3 plays — slot nr. 3
6 plays — slot nr. 6

Thus, any variation from 1 — 12 plays is possible.

1. Remove credit unit cover
2. Clap out base plate of credit unit
3. To take off top plate, loosen screw and remove circlip from main wheel pin. Take off plastic spacer and washer.
4. Remove tension spring
5. Take off top wheel
6. Refit wheel in such a way that the drive pin is led into the needed slot of the wheel
7. If second or third wheel has to be altered, follow same procedure as above. (Be careful to replace washers when assembling.)
8. Refit all other parts contrary to above indicated sequence.
9. Check with coins.
10. Change price instructions at the selector key panel. Credits and price instructions have to coincide.

## DISCOTHEQUE / ALBUM:

An ALBUM-selection can be made, when sufficient credits have been accumulated. (See price instruction.) If, for ex., an ALBUM-selection is set for 3 credits, a minimum of 3 credits must be accumulated.

1. Positions 1 and 2 in the credit unit are connected with one contact finger and positions 3 and 4 with another contact finger.
2. Cam N4 of the switch mechanism (left hand side — carriage base) is set in such a way that 3 subtractions are realized in the credit unit at each ALBUM-selection.
3. Push open cover of the selector switches, contact finger at the selector switches must be changed from 1 to 2 for ALBUM-selection.

## CONNECTION OF LOUDSPEAKERS:

The impedance of installed loudspeaker combinations is 8 Ω per channel. If additional loudspeakers are to be used, attention must be paid to the impedance matching.

In case of mismatching the electronic fuses in the amplifier will cut out.

The total impedance of the connected loudspeakers should not be less than 3 Ω per channel.

See inclosed "EXTENSION SPEAKER CONNECTIONS".
If desired outputtransformer is available Part No. 41513 (figure 1-3).
Max. music power = 60 Watts per channel.

## MATCHING THE SOUND TO THE ROOM ACOUSTICS:

After lifting up selector key panel, the sound controls can be reached.

Treble-control switch
Bass-control switch
Record quality compensator
Channel level adjusting

Upon leaving the factory both channels are adjusted to the same level. If neccessary, the level may be limited to the desired maximum at the place of installation.

← While reading, unfold operating scheme to the left.

## CIRCUIT DESCRIPTION OF CONSUL 120

After connecting the cord to the 117 VAC line and switching the machine ON, it is ready to operate. The 3 2/10 amp. slo-blo fuse protects the circuit of the flourescent lights, and the primary of the control transformer. The primary of the amplifier transformer is protected by the 1 2/10 amp. slo-blo fuse. All other circuits feed from the secondary of the transformer, and are thus insulated from the line voltage.

### 1. CREDIT

When a coin is deposited through the coin slot, it passes through the acceptor, closing the corresponding coin switch. This energizes the related add solenoid, a credit is made and the credit switch AK in the credit unit is now closed. Depending on the number of credits, the single-album switch KS will move to one of its contacts. Over contact AK the " Single Selection" lamp will be lit.

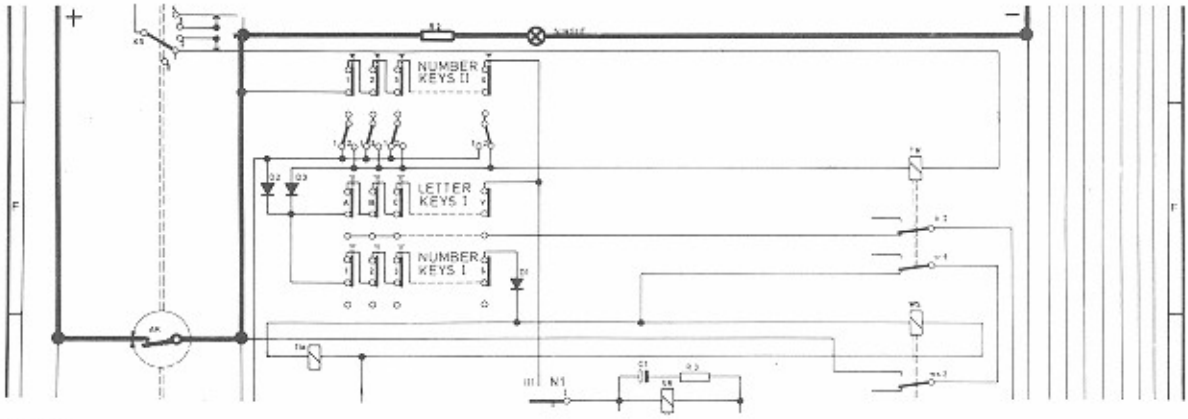


Circuit:
plus - AK - R2 - lamp, SINGLE - minus.

Simultaneously the circuit to the latch bar solenoid (TM) and the restart locking relay (WS) is closed.

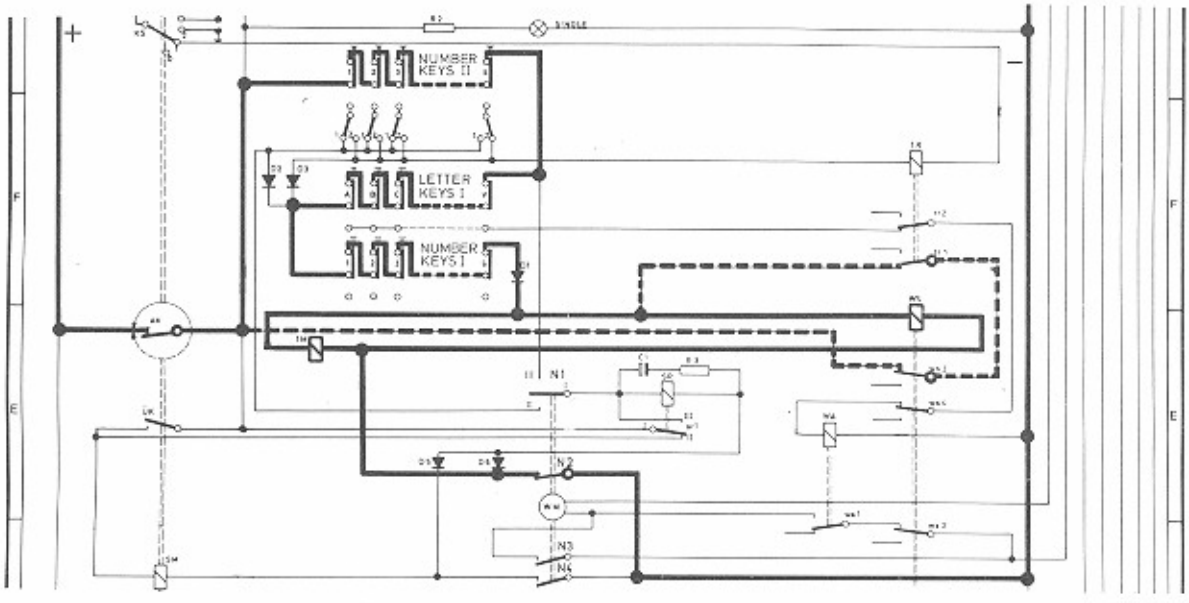


Circuit:
plus - AK - number keys II (1 through 6) letter keys I (V through A) - number keys I (1 through 6) - D1 - TM and WS - N2 - minus.

With the latch bar solenoid energized, the buttons will be able to lock in. The contacts on the restart locking relay, ws1 through ws4, are now switched over. Contact ws2 locks the circuit to TM and WS.

Circuit:
plus - AK - ws2 - tr1 - TM and WS - N2 - minus.

The price for album play can be changed (see credit unit). On the diagram, the album circuit is set for 3 credits per album. With less than 3 credits registered, the single-album switch KS is in the 1 or 2 position, thus connecting one side of the latch bar relay to minus.

## 2.1 SINGLE SELECTION CYCLE

When a number (single) and letter button are pressed, the circuit to the start relay (WA) is closed and the selection cycle starts.

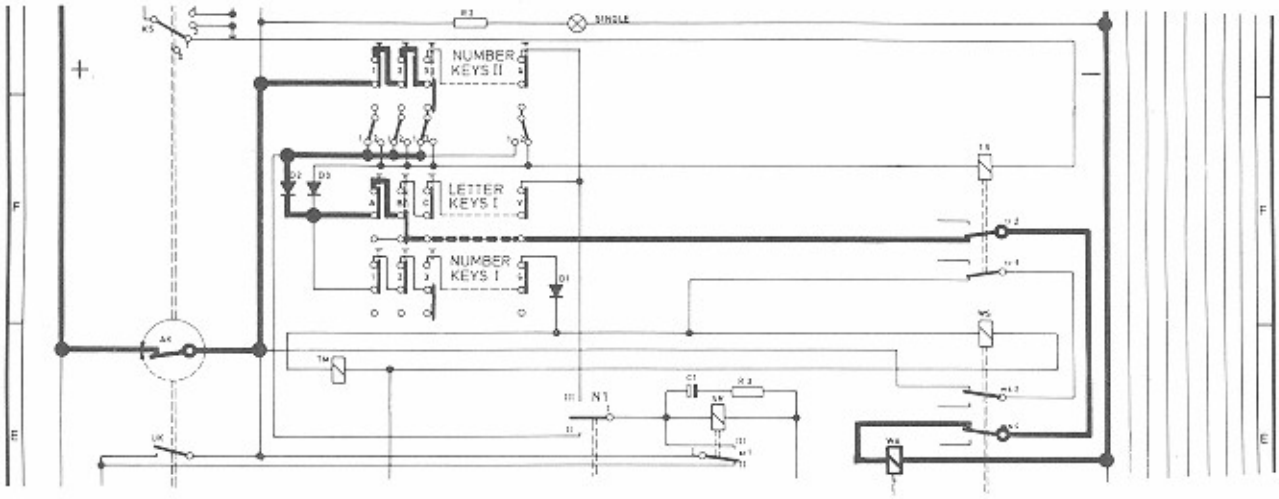


Circuit (B3 selected):
plus - AK - number keys II,3 - contact plate pos. 1 - D2 - letter keys I,B - tr2 - ws4 - WA - minus.

Energizing the start relay, closes contact wa1 hereby connecting the selection motor to the 30 VAC.

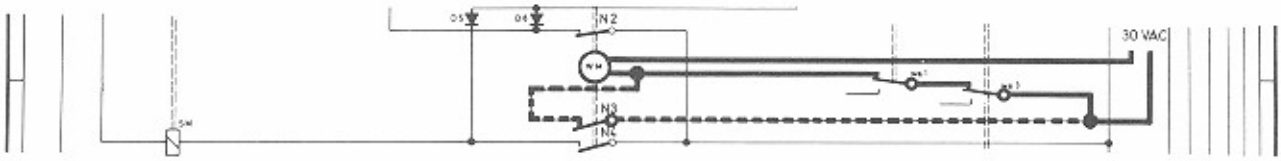


Circuit:
30 VAC - selection motor - wa1 - ws3 - 30 VAC.

The selection motor turns the contact cam, and contact N3 will close first.

Circuit:
30 VAC - selection motor - N3 - 30 VAC.

When contact N4 closes, the subtract solenoid (SM) is energized.

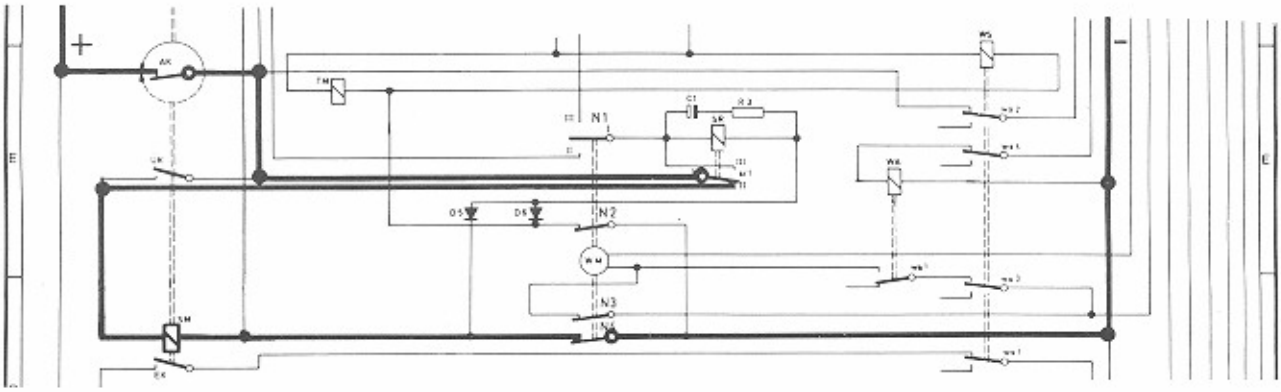


Circuit:
plus - AK - sr1 - SM - N4 - minus.

The movement of the subtract solenoid causes the carry over switch SÜ and the write-in trigger switch EK to close. When the write-in trigger switch is closed, the actual preselection is concluded, but this action will be described in paragraph 3. Now contact N1, II-1 closes, completing the circuit to the single relay SR.

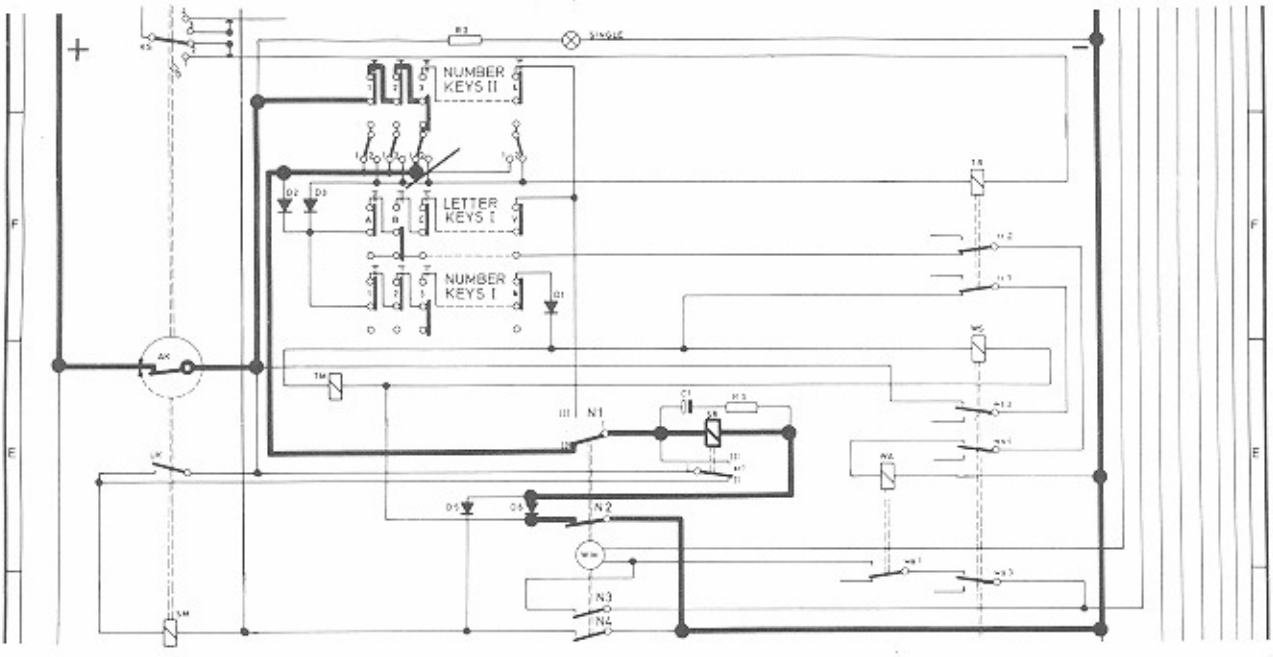


Circuit:
plus - AK - number keys II, 3 - contact plate pos. 1 - N1, II-I - SR - D6 - N2 - minus.

Single relay contact sr 1, I-II, opens the circuit to the subtract solenoid, thus cancelling all the other subtract pulses from contact N4, by single selection. Contact sr 1, I-III, is now the holding contact for the single relay. The single relay stays energized after N2 has opened. It gets the minus over N4 and D5. Time constant network R3 and C1 over the single relay, keeps the relay closed while N4 is open between pulses. The movement of the subtract solenoid moves the credit wheel back one credit.

The selection motor closes the scan switch, which completes the circuit to the carriage motor and the clutch solenoid (see scanning). Just before completing the one subtraction pulse, N2 opens the circuit to the latch bar solenoid and the restart locking relay. The buttons will now jump back to the rest position.

At the end of the selection cycle, contact N2 closed again. If anymore credit is available, the restart locking relay and the latch bar solenoid will energize again through N2 and the rest contacts of the buttons. If a button should stay down, the restart locking relay cannot pull in because contact ws4 is open. This prevents making any undesired selections.

The selection motor will stop running as soon as contact N3 opens.

## 2.2 ALBUM SELECTION CYCLE

The jumper blade of number key 6 on the contact plate is in position 2. If an album number key is pressed, and there is not enough credit available the latch bar relay (TR) will energize.

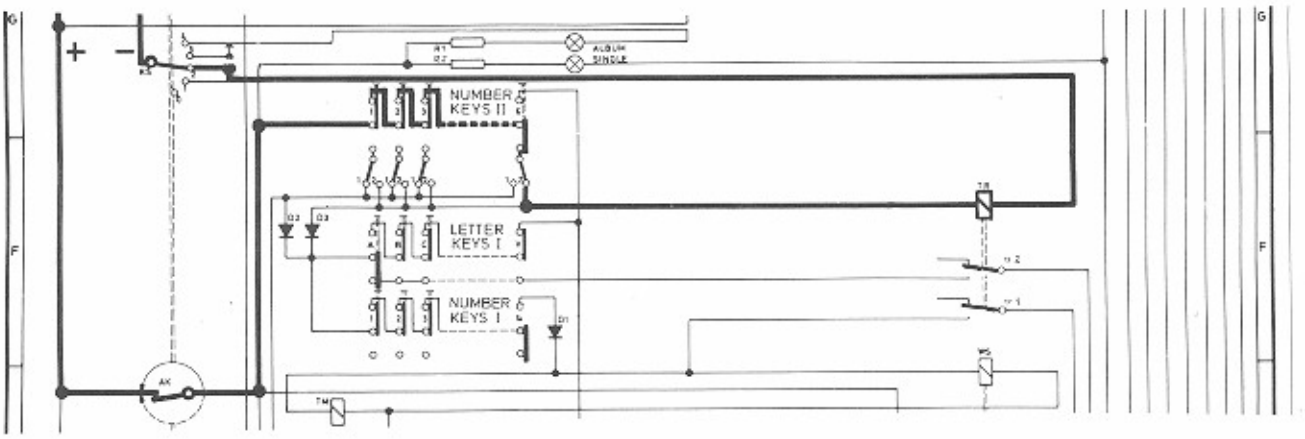


Circuit:
plus - AK - number keys II, 6 - contact plate pos. 2 - TR - single-album switch KS - minus.

When the latch bar relay energizes, and contact tr 1 opens the circuit to the restart locking relay an the latch bar solenoid, the buttons cannot latch, contact tr2 opens the circuit to the start relay, and no selection is made.

If 3 or more credits are available, single-album switch KS is in position 3 or 4, thus the negative line to the latch bar relay is open and the " ALBUM selection " lamp is lit.

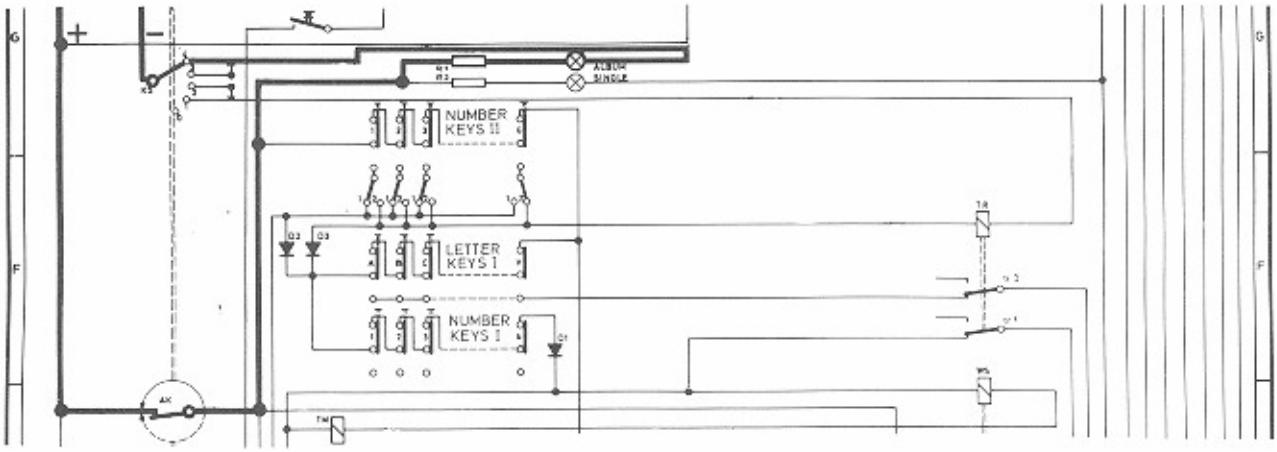


Circuit:
plus - lamp, ALBUM - R1 - single-album switch KS - minus.

If a number (ALBUM) and letter button is pressed now, the circuit to the start relay is closed and the selection cycle starts.

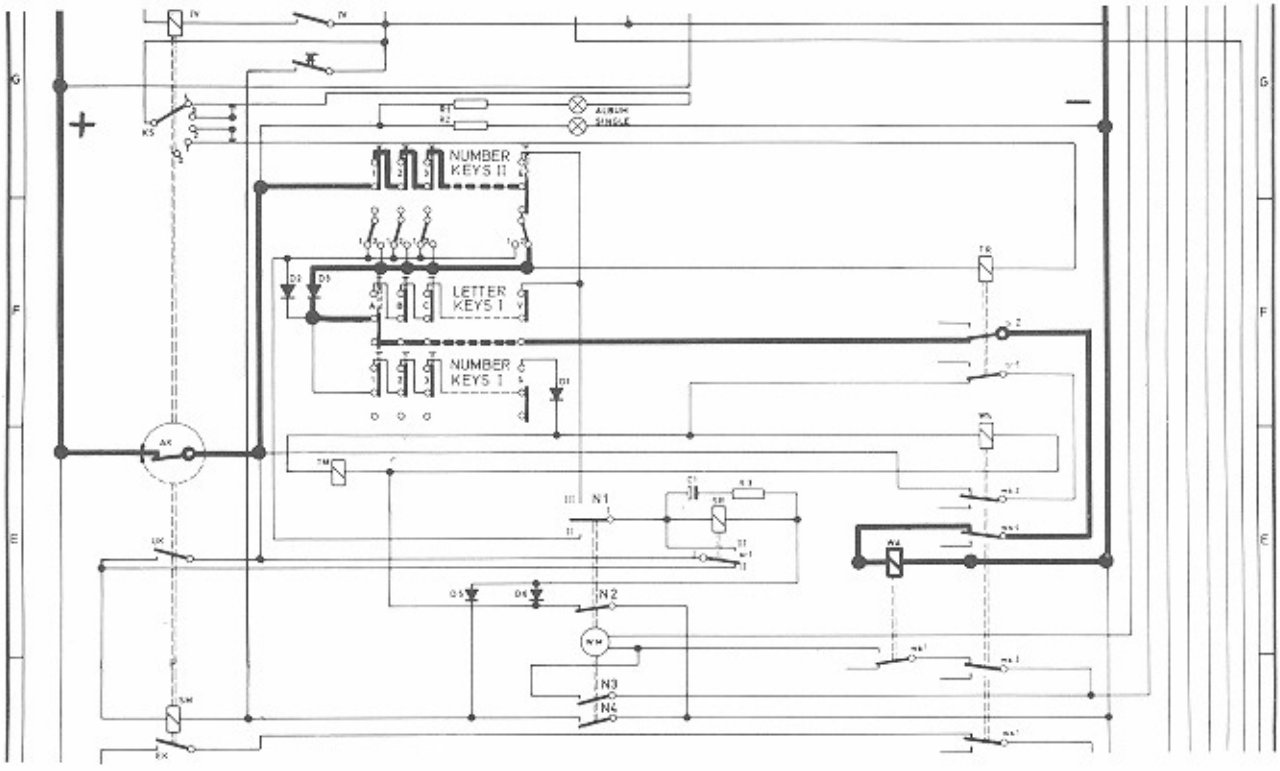


Circuit:
(A6 selected) plus - AK - number keys II, 6 - contact plate pos.2 - D3 - letter keys I, A - tr2 - ws4 - WA - minus.

The cycle is the same as for single selection, except the following. The single relay will not be energized by album selection, therefore all the subtract pulses from contact N4 will be registered. Because contact N2 opens after the first subtract pulse, the restart locking relay is deenergized, opens contact ws1, thus only the first write-in pulse from the write-in trigger switch will be used.

## 3. THE ELECTRONIC SELECTION SYSTEM

The CONSUL uses the more advanced electronic system using toroidal shaped magnetic cores of magnesium ferrite, called toroids. There are 120 toroids, one for each selection arranged in two rows of 60. The system uses a minimum amount of current, while the only moving parts, the read-out plungers, only touch the contacts.
The 120 toroids are ring shaped with a diameter of 4 mm. Because they are made of ferrite, they have very definite properties.

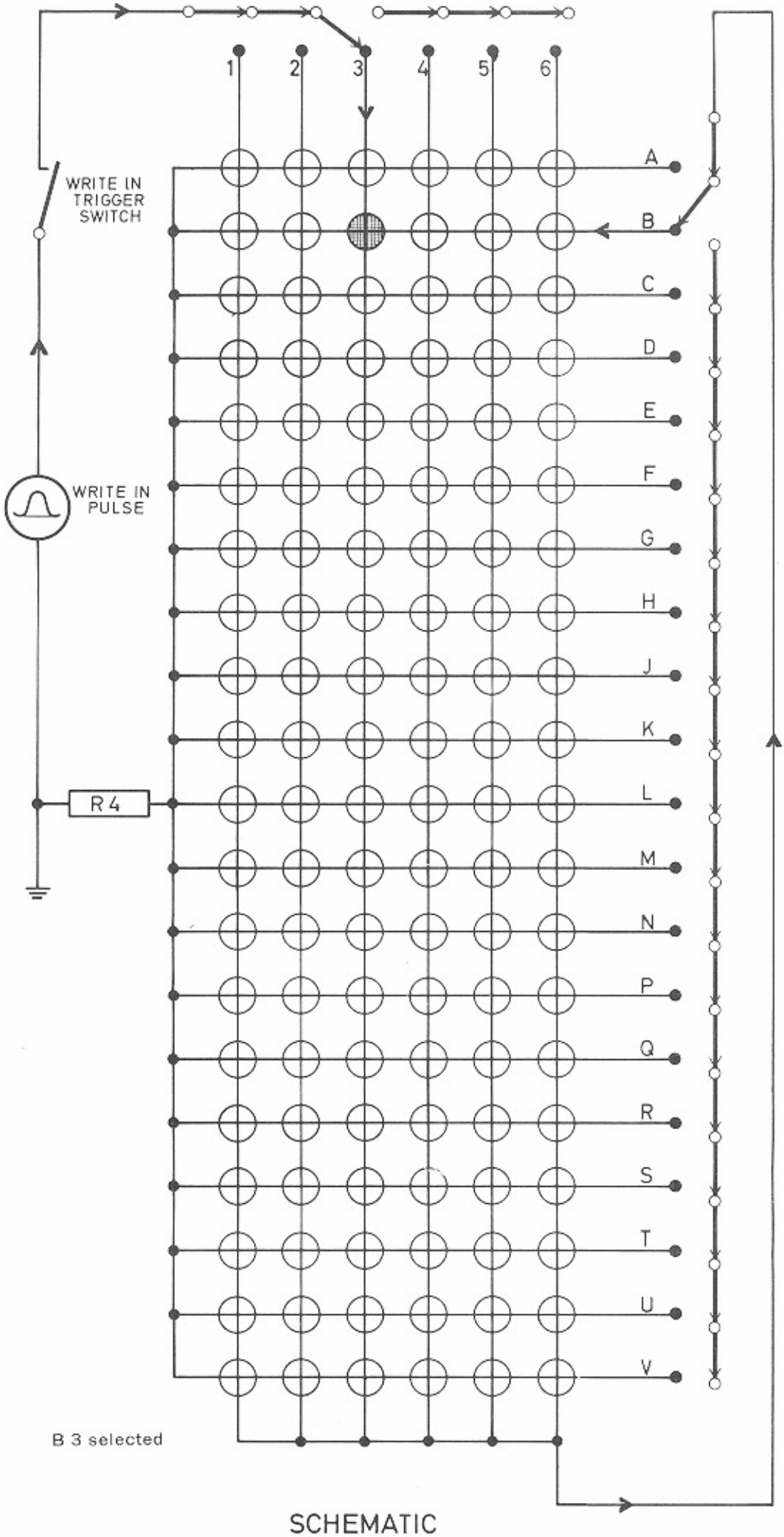


SCHEMATIC
MEMORY UNIT

Each magnet has a northpole and a southpole.

Magnetic lines run between the poles. With ring magnets, the lines form a closed circuit.

There are two conditions, the lines run clockwise, or they run counter clockwise.

To change a toroid from one condition into the other a magnetic field of well defined amplitude, shape, and polarity is necessary.

When electric current flows through a wire, a magnetic field builds up around the wire. The direction of the magnetic lines depend on the direction of the current in the wire.

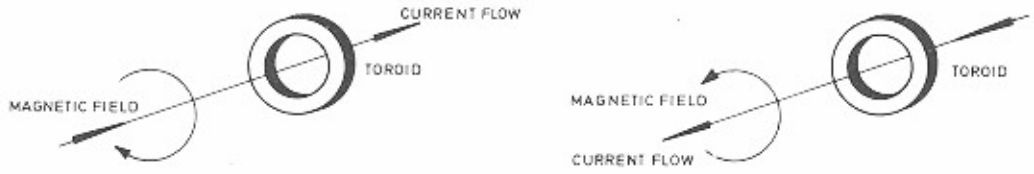


4 wires run through each toroid, 2 for write-in, 1 for read-out, 1 for trip.

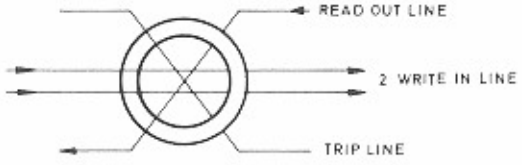


The electric pulses through these wires are of such amplitude and direction that the selected toroid will change its condition. We call the selected state the YES condition, the not selected state NO condition.

## 3.1 WRITE-IN (PRESELECTION)

From each number key a write-in line runs through that number group, then to the letter keys. From there a second write-in line runs through that letter group, over resistor R4 to negative. (See schematic).

When a selection is made, in this case B3, the pulse travels through the write-in trigger switch, the line going through all the number 3 toroids, to the letter keys, through all the B toroids, and over R4 back to minus. Thus, all the number 3 and letter B toroids receive a current of half the necessary amplitude, but only the toroid where the two lines cross, in this case B3, will receive the pulse with the needed amplitude to turn from the NO to the YES condition.

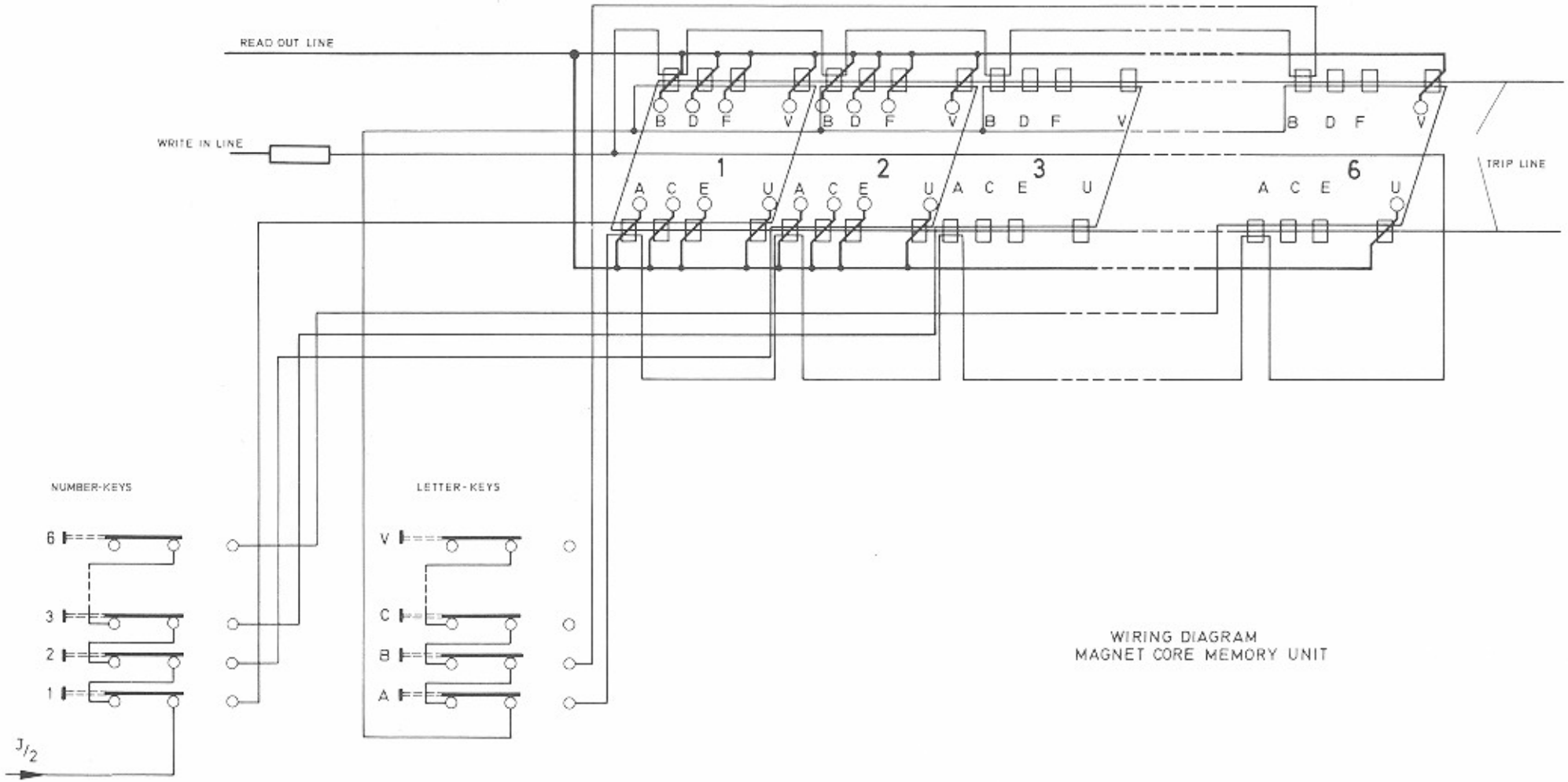


WIRING DIAGRAM
MAGNET CORE MEMORY UNIT

The 110 VAC coming from the secondary of the control transformer is converted to 300 VDC by the rectifier-doubler circuit of D10, C7, C8, D12, R15 and R16.

Over R12, the write-in capacitor C5 is charged to 300 VDC. R11 is a series resistor for Zener diode ZD1. Over voltage divider R9 and R10, a reference pulse is placed over C4, which through D11, will control the amplitude of the write-in pulse. When the write-in trigger switch is closed, capacitor C5 is discharged over contact ws1 through the network R5, C2, Dr1, R7, R6, C3, which will give the pulse the desired shape, over Dr2, number and letter keys, the selected toroid, and through R4 back to ground.

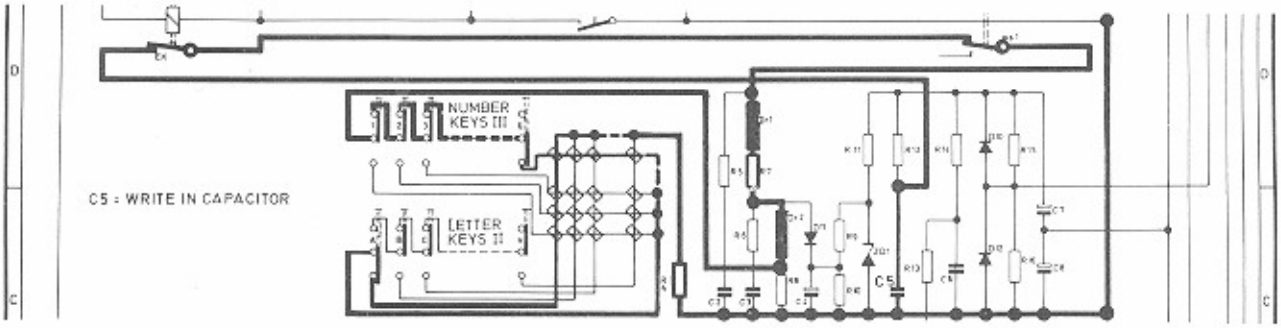


Circuit ( A 6 selected ):

C5 - write-in trigger switch - ws1 - pulse shape circuit - Dr2 - number keys III, 6 - toroids number 6 - letter keys II, A - toroids letter A - R4 - C5 minus.

Flipping over of toroid A 6 completes the write-in cycle of selection A 6

## 3.2 READ-OUT

As we saw before, the turning of the selection motor, closes the scan switch, thus energizing the clutch solenoid, and starting the carriage motor. The read-out contacts will touch each contact on the memory unit in sequence. From each contact a read-out line runs through the related toroid to minus. Each time the read-out contact touches a toroid contact the circuit to the search relay (AR) is closed.

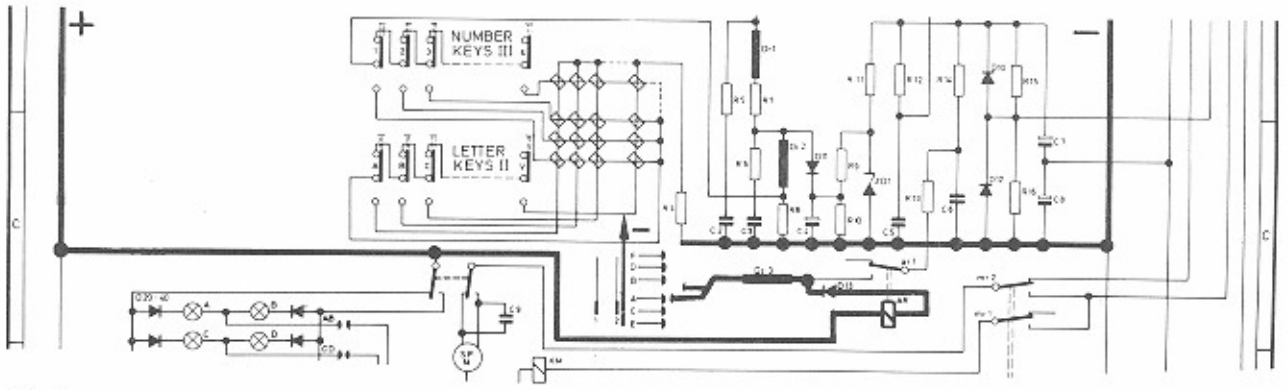


Circuit:

plus - AR - D13 - Dr3 - read-out contact - toroid contact - toroid - minus.

The search relay is energized. The current drawn by the relay through the toroids is not strong enough to flip a toroid over. This happens over the closing contact ar1. Now read-out capacitor C6, charged to 300 VDC, can discharge over R 13 through the read-out line. Amplitude and rise time of this pulse are controlled by R13 and Dr3.

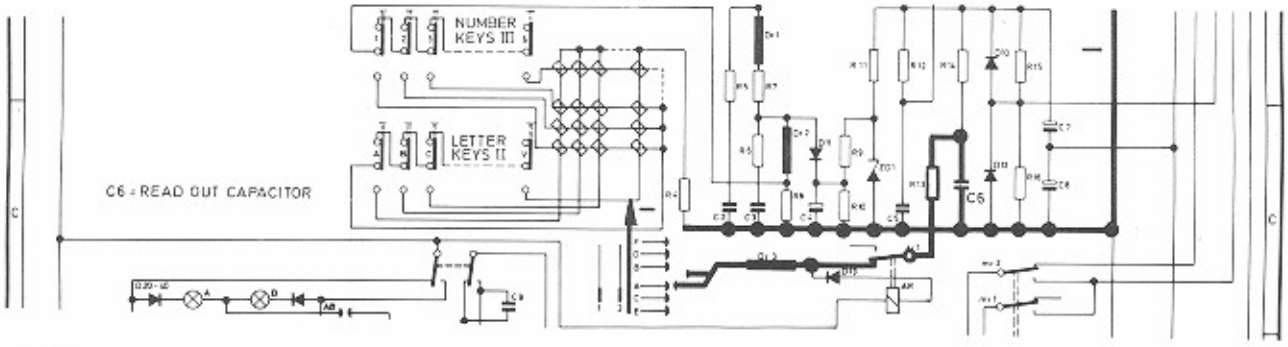


Circuit:

C6 - R13 - ar1 - Dr3 - read-out contact - toroid contact - toroid - C6 minus.

This happens with each of the 120 toroids

If we encounter a toroid in the YES condition, this will flip over. Because of the changing magnetic field, a pulse will be induced in the trip line. Because the amplitude and duration (1 μ sec.) of this pulse are very small, we feed it to a pulse amplifier.

3.3 TRIP

The trip pulse is of positive polarity. These pulses are integrated by the input network R19, R20, and C12, and coupled to the cathode gate of the Silicone Control Switch ( SCS ). The supply voltage for SCS comes from the 30 VDC, and is filtered and stabilized by the network C10, R18, C11 and ZD1. The capacitor C14, prevents premature conducting of SCS by any transient pulses in the circuit. The input of the puise amplifier is so designed that only pulses with the right amplitude and duration will trip the circuit. We can thus disregard the pulses induced during the write-in cycle, since these are of negative polarity. Capacitor C13 is discharged over R23 and contact Ir2, I - III. The positive trip pulse will cause SCS to conduct, and trip relay (LR) will be energized. This will cause contact Ir2, I - III, to switch. The relay will be held in by the charge current of C13. When C13 is completely charged the trip relay will deenergize. However, while the relay was energized, the anode gate of SCS was connected to ground by contact Ir2, I - II, causing the SCS to go back into cut-off. Contact Ir1 will have closed the circuit of the trip solenoid. (LM)

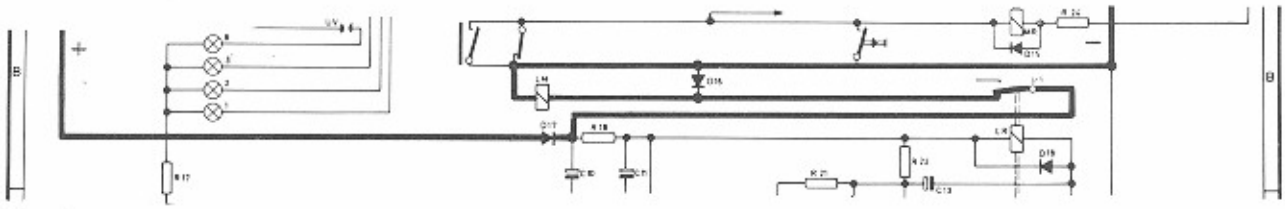

Circuit:
plus - D 17 - Ir 1 - LM - minus.

The trip solenoid uncouples the scan gear, the carriage stops, and the transfer cycle starts.

4. TRANSFER

The selected record is transfered by the transfer arm. The record clamp arm will sense the diameter of the centerhole, and determine the desired speed, 45 RPM or 33 1/3 RPM. The pick-up arm lands in the first groove. The operating switch opens, causing the motor relay (MR) and the muting relay (SR) to deenergize.

Motor relay contact mr 1: opens the circuit to the clutch solenoid.
contact mr 2: switches the carriage motor from 125 VAC to 80 VAC.

Muting relay contact sr 1: switches the amplifier ON.

5. PLAY

The needle will track the record.

6. END OF RECORD

When the needle reaches the cut-off groove the cancel reed switch will close, causing the motor relay and the muting relay to energize.

Motor relay contact mr 1: closes the circuit to the clutch solenoid.
contact mr 2: switches the motor back from 80 VAC to 125 VAC.

Muting relay contact sr 1: mutes the amplifier.

7. TRANSFER AND SCANNING:

After returning the record to the record magazine, the carriage unlocks itself from the gear rack, and the drive gear goes back from the transfer to the scan position. At each end of the record magazine is a lever which controls the reversing switch, hereby changing the direction of travel of the carriage. The carriage will scan twice and will come to its rest position if no more selections are made.

8. CONTROL AND SERVICE SWITCHES

Credit button: Free play button, each pulse gives one credit.

Credit cancel button: Each pulse will subtract one credit.

Record reject: By holding the reject button down for 1.5 seconds any record can be rejected before end of play.

Scan button: Allows travel and stop of carriage in any desired place.

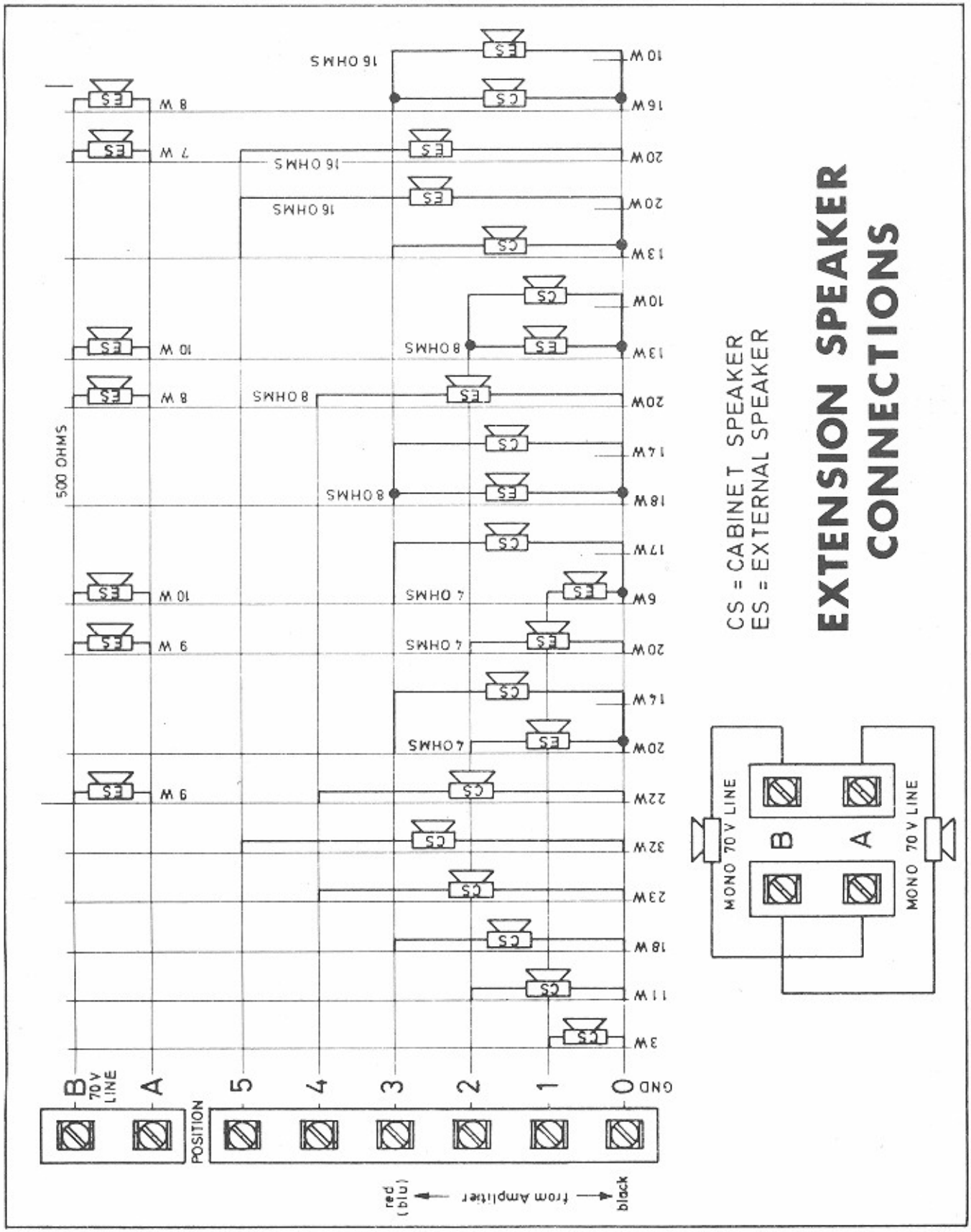
EXTENSION SPEAKER CONNECTIONS
CS = CABINET SPEAKER
ES = EXTERNAL SPEAKER
MONO 70 V LINE
MONO 70 V LINE
B
A
500 OHMS
B 70 V LINE
A
POSITION
5
4
3
2
1
0
GND
from Amplifier
red (blu)
black
16 OHMS
8 OHMS
4 OHMS
8 W
7 W
10 W
9 W
10W
13W
20W
14W
18W
17W
6W
22W
32W
23W
11W
3W

# TRANSISTOR-AMPLIFIER 70 S

| | | | | |
|---|---|---|---|---|
| R 2/R 2' | Carbon resistor | 2 | Megohm | ½ W ± 10% |
| R 3/R 3' | Carbon resistor | 8 200 | Ohm | ½ W ± 5% |
| R 4/R 4' | Carbon resistor | 3 300 | Ohm | ½ W ± 10% |
| R 5/R 5' | Carbon resistor | 1 | Megohm | ½ W ± 5% |
| R 6/R 6' | Carbon resistor | 120 000 | Ohm | ½ W ± 10% |
| R 7/R 7' | Carbon resistor | 27 000 | Ohm | ½ W ± 10% |
| R 8/R 8' | Carbon resistor | 1 000 | Ohm | ½ W ± 5% |
| R 9/R 9' | Carbon resistor | 3 900 | Ohm | ½ W ± 5% |
| R10/R10' | Carbon resistor | 82 000 | Ohm | ½ W ± 10% |
| R11/R11' | Carbon resistor | 390 000 | Ohm | ½ W ± 10% |
| R12/R12' | Carbon resistor | 10 000 | Ohm | ½ W ± 10% |
| R13/R13' | Carbon resistor | 8 200 | Ohm | ½ W ± 5% |
| R14/R14' | Carbon resistor | 22 000 | Ohm | ½ W ± 10% |
| R15/R15' | Carbon resistor | 2 700 | Ohm | ½ W ± 10% |
| R16/R16' | Carbon resistor | 560 | Ohm | ½ W ± 5% |
| R17/R17' | Carbon resistor | 4 700 | Ohm | ½ W ± 5% |
| R18/R18' | Carbon resistor | 120 | Ohm | ½ W ± 5% |
| R19/R19' | Carbon resistor | 27 000 | Ohm | ½ W ± 10% |
| R20/R20' | Carbon resistor | 820 000 | Ohm | ½ W ± 10% |
| R21/R21' | Carbon resistor | 120 000 | Ohm | ½ W ± 10% |
| R22/R22' | Carbon resistor | 82 000 | Ohm | ½ W ± 10% |
| R23/R23' | Carbon resistor | 10 000 | Ohm | ½ W ± 10% |
| R24/R24' | Carbon resistor | 10 000 | Ohm | ½ W ± 10% |
| R25/R25' | Carbon resistor | 10 000 | Ohm | ½ W ± 10% |
| R26/R26' | Carbon resistor | 100 000 | Ohm | ½ W ± 10% |
| R27/R27' | Carbon resistor | 120 000 | Ohm | ½ W ± 10% |
| R28/R28' | Carbon resistor | 3 900 | Ohm | ½ W ± 10% |
| R29/R29' | Carbon resistor | 8 200 | Ohm | ½ W ± 5% |
| R30/R30' | Carbon resistor | 2 200 | Ohm | ½ W ± 10% |
| R31/R31' | Carbon resistor | 22 000 | Ohm | ½ W ± 10% |
| R32/R32' | Carbon resistor | 150 000 | Ohm | ½ W ± 5% |
| R33/R33' | Carbon resistor | 150 000 | Ohm | ½ W ± 5% |
| R34/R34' | Carbon resistor | 10 000 | Ohm | ½ W ± 10% |
| R35/R35' | Carbon resistor | 1 | Megohm | ½ W ± 5% |
| R36/R36' | Carbon resistor | 5 600 | Ohm | ½ W ± 5% |
| R37/R37' | Carbon resistor | 68 | Ohm | ½ W ± 5% |
| R38/R38' | Carbon resistor | 1 | Megohm | ½ W ± 5% |
| R39/R39' | Carbon resistor | 220 000 | Ohm | ½ W ± 5% |
| R40/R40' | Carbon resistor | 10 000 | Ohm | ½ W ± 10% |
| R41/R41' | Carbon resistor | 15 | Ohm | ½ W ± 5% |
| R42/R42' | Carbon resistor | 4 700 | Ohm | ½ W ± 5% |
| R43/R43' | Carbon resistor | 4 700 | Ohm | ½ W ± 5% |
| R44/R44' | Carbon resistor | 3 900 | Ohm | ½ W ± 10% |
| R45/R45' | Carbon resistor | 1 | Megohm | ½ W ± 5% |
| R46/R46' | Carbon resistor | 5 600 | Ohm | ½ W ± 5% |
| R47/R47' | Carbon resistor | 68 | Ohm | ½ W ± 5% |
| R48/R48' | Carbon resistor | 220 000 | Ohm | ½ W ± 5% |
| R49/R49' | Carbon resistor | 150 000 | Ohm | ½ W ± 5% |
| R50/R50' | Carbon resistor | 220 000 | Ohm | ½ W ± 5% |
| R51/R51' | Carbon resistor | 5 600 | Ohm | ½ W ± 5% |
| R52/R52' | Carbon resistor | 4 700 | Ohm | ½ W ± 5% |
| R53 | Carbon resistor | 1 500 | Ohm | ½ W ± 10% |
| R54/R54' | Carbon resistor | 1 | Megohm | ½ W ± 5% |
| R55/R55' | Carbon resistor | 1 000 | Ohm | ½ W ± 5% |
| R56/R56' | Carbon resistor | 1 000 | Ohm | ½ W ± 5% |
| R57/R57' | Carbon resistor | 1 200 | Ohm | ½ W ± 5% |
| R58/R58' | Carbon resistor | 12 000 | Ohm | ½ W ± 5% |
| R60/R60' | Carbon resistor | 1 000 | Ohm | ½ W ± 5% |
| R61/R61' | Carbon resistor | 2 700 | Ohm | ½ W ± 5% |
| R62/R62' | Carbon resistor | 560 | Ohm | ½ W ± 5% |
| R63/R63' | Carbon resistor | 330 | Ohm | ½ W ± 5% |
| R64/R64' | Carbon resistor | 330 | Ohm | ½ W ± 5% |
| R65/R65' | Wire resistor | 1/2 | Ohm | 2 W ± 5% |
| R66/R66' | Wire resistor | 1/2 | Ohm | 2 W ± 5% |
| R67/R67' | Carbon resistor | 22 | Ohm | ½ W ± 5% |
| R68/R68' | Carbon resistor | 8 200 | Ohm | ½ W ± 5% |
| R69 | Carbon resistor | 5 600 | Ohm | ½ W ± 5% |
| R70 | Carbon resistor | 220 | Ohm | ½ W ± 5% |
| R71/R71' | Carbon resistor | 4 700 | Ohm | ½ W ± 5% |
| R72 | Carbon resistor | 4 700 | Ohm | ½ W ± 5% |
| R73/R73' | Carbon resistor | 68 | Ohm | ½ W ± 5% |
| R74 | Carbon resistor | 1 500 | Ohm | ½ W ± 5% |
| R75/R75' | Carbon resistor | 1 200 | Ohm | ½ W ± 5% |
| R76 | Carbon resistor | 1 000 | Ohm | ½ W ± 5% |

| | | |
|---|---|---|
| P 1/P 1' | Trimmer resistor | 500 Ohm ⅓ W. lin. |
| P 3/P 3' | Adjusting resistor | 500 000 Ohm, lin. |
| P 4/P 4' | Adjusting resistor | 2 500 Ohm, lin. |
| C 1/C 1' | Lytic | 50 Mfd/ 15 V |
| C 2/C 2' | Mylar | 0.1 Mfd/250 V |
| C 3/C 3' | Lytic | 1 Mfd/ 35 V |
| C 4/C 4' | Lytic | 50 Mfd/ 15 V |
| C 5/C 5' | Lytic | 50 Mfd/ 25 V |
| C 6/C 6' | Lytic | 10 Mfd/ 10 V |
| C 7/C 7' | Mylar | 0.033 Mfd/250 V |
| C 8/C 8' | Mylar | 0.015 Mfd/400 V |
| C 9/C 9' | Lytic | 100 Mfd/ 3 V |
| C10/C10' | Lytic | 250 Mfd/ 6 V |
| C11/C11' | Mylar | 0.22 Mfd/250 V |
| C12/C12' | Lytic | 25 Mfd/ 10 V |
| C13/C13' | Lytic | 25 Mfd/ 10 V |
| C14/C14' | Mylar | 0.01 Mfd/400 V |
| C15/C15' | Lytic | 5 Mfd/ 35 V |
| C16/C16' | Lytic | 10 Mfd/ 25 V |
| C17/C17' | Lytic | 10 Mfd/ 25 V |
| C18/C18' | Lytic | 50 Mfd/ 25 V |
| C19/C19' | Lytic | 10 Mfd/ 25 V |
| C20/C20' | Lytic | 100 Mfd/ 35 V |
| C21/C21' | Mylar | 0.68 Mfd/250 V |
| C22/C22' | Mylar | 0.22 Mfd/250 V |
| C23/C23' | Mylar | 0.1 Mfd/250 V |
| C24/C24' | Mylar | 0.1 Mfd/250 V |
| C25/C25' | Lytic | 5 Mfd/ 35 V |
| C26/C26' | Mylar | 0.1 Mfd/250 V |
| C27/C27' | Mylar | 0.1 Mfd/250 V |
| C28/C28' | Mylar | 0.1 Mfd/250 V |
| C29/C29' | Mylar | 0.1 Mfd/250 V |
| C30/C30' | Lytic | 250 Mfd/ 6 V |
| C31/C31' | Mylar | 0.01 Mfd/250 V |
| C32/C32' | Mylar | 0.033 Mfd/250 V |
| C33/C33' | Mylar | 0.1 Mfd/250 V |
| C34 | Lytic | 1000 Mfd/ 35 V |
| C35/C35' | Lytic | 5 Mfd/ 35 V |
| C36/C36' | Lytic | 25 Mfd/ 10 V |
| C37/C37' | Lytic | 25 Mfd/ 35 V |
| C38/C38' | Mylar | 0.01 Mfd/400 V |
| C39/C39' | Lytic | 50 Mfd/ 35 V |
| C40/C40' | Mylar | 0.001 Mfd/160 V |
| C41/C41' | Mylar | 0.22 Mfd/250 V |
| C42/C42' | Lytic | 2500 Mfd/35/40 V |
| C43/C43' | Lytic | 250 Mfd/ 6 V |
| C44 | Lytic | 5000 Mfd/ 70 V |
| D 1/D 1' | Silicon diode | 1 N 4004 |
| D 2/D 2' | Silicon diode | 1 N 4004 |
| D 3/D 3' | Silicon diode | 1 N 4004 |
| D 4/D 4' | Silicon diode | 1 N 4004 |
| D 5/D 5' | Silicon diode | 1 N 4004 |
| D 6/D 6' | Silicon diode | 1 N 4148 |
| D 7/D 7' | Silicon diode | 1 N 4148 |
| D 8/D 8' | Silicon diode | 1 N 4148 |
| D 9/D 9' | Silicon diode | 1 N 4148 |
| D10/D10' | Zener diode | BZY 85 C 4 V 7 |
| D11 | Silicon diode | 1 N 4004 |
| D12 | Silicon diode | 1 N 4004 |
| T 1/T 1' | Transistor | BC 149 B |
| T 2/T 2' | Transistor | BC 149 B |
| T 3/T 3' | Transistor | BC 147 B |
| T 4/T 4' | Transistor | BC 147 B |
| T 5/T 5' | Transistor | BC 147 B |
| T 6/T 6' | Transistor | BC 147 B |
| T 7/T 7' | Transistor | BC 147 B |
| T 8/T 8' | Transistor | BC 147 B |
| T 9/T 9' | Transistor | BC 147 B |
| T10/T10' | Transistor | BC 147 B |
| T11/T11' | Transistor | 40361 RCA |
| T12/T12' | Transistor | 40362 RCA |
| T15 | Transistor | BC 117 VI/BC 157 A |
| T16 | Transistor | BC 147 B |
| RL 1 | Mute relay | V 23154 — NO 721 — B 110 |

# TRANSISTOR-AMPLIFIER 70 S

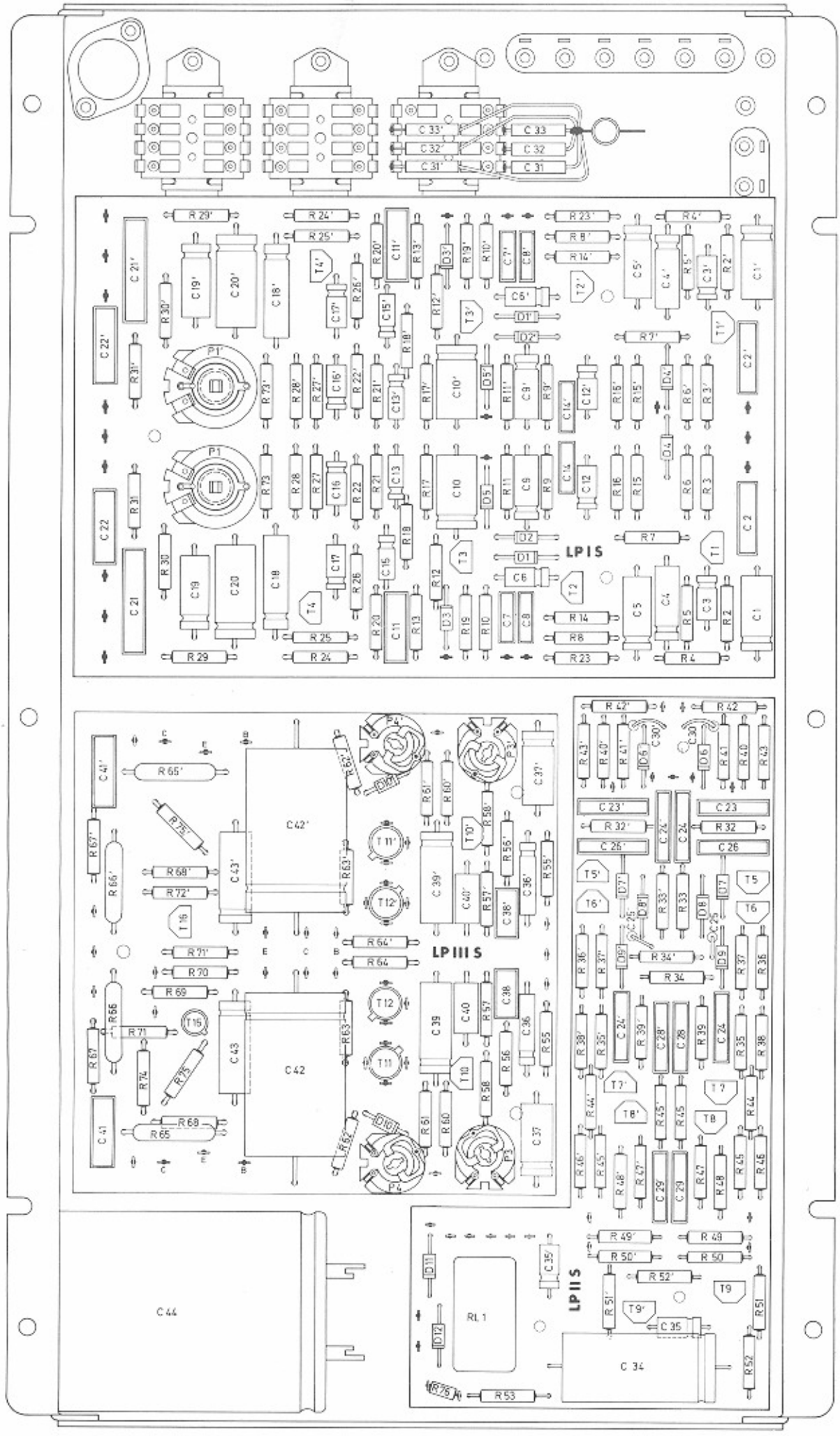

## TRANSISTOR AMPLIFIER 70 S

The 70 S is a fully transistorized amplifier, free from iron cores and unaffected by supply voltage variations.
Output is 60 W. music power per channel.
Distortion is less than 1% at 20 W. sine output in frequency range of 20 cs to 20 Kcs.
The 2 channels are completely separate and the amplifier has 30 transistors and 22 silicone diodes, and is divided in 3 major sections.

1. PLATE I S

   Pre-amplifier with AVC and treble control.

2. PLATE II S

   Volume control and bass control network, and muting relay.

3. PLATE III S

   Phase splitter and output stage with electronic fuse.

### 1. PRE-AMPLIFIER (PLATE I S)

The audio signal from the cartridge is amplified by high input impedance transistor T1 and passed to the base of transistor T2. In order to obtain a constant output volume on records with varying recording levels, the next stage acts as AVC amplifier. After being amplified by T2, the audio signal is tapped before C16, and is coupled to the base of T3. The output of T3 in conjunction with D1, D2 and D3 forms a variable internal resistance: If the strength of the incoming signal changes, the AC-impedance of the network will also change and control the signal at the base of T2. Therefore, high signals will be amplified less and low signals will be amplified more. To reduce the background noise of old and worn records, a record noise compensating switch, with 3 positions, has been fitted into the circuit. To reduce the noise of the needle setting down on the record and entering the first groove, the AVC will allow the volume to reach its preset level with an 8 to 10 second delay. The output of each channel can be adjusted over 10 db. with the level controls.

### 2. VOLUME CONTROL (PLATE II S WITH MUTING RELAY)

The signal coming from emitter-follower T4 goes over level control P1 to the volume control circuit. Diodes D6, D7, D8 and D9, and transistors T5, T6, T7 and T8 make up the two wire volume control and bass boost circuit. With full volume, the volume control has zero resistance. No current will flow through the diodes, thus they have a very high resistance, several M ohms. Therefore, the signal going to T5 and T7 is of the same amplitude. T6 and T8 are the drivers for T9. The combination of T5 and T6 drives the bottom end of the bass boost circuit. At full volume, the amplitude and phase of the output of T6 and T8 are the same, so the signal is the same on each end of the bass boost circuit, that means no filtering takes place and the frequency response is flat. As the volume is turned down, current will flow through the diodes, and their resistance decreases. Due to the shunting effect of resistor R34 and capacitor C25, diodes D6 and D7 start reducing the signal before D8 and D9. This means smaller input to T5 and thus smaller output from T6. Since the signal over the bass boost is now different, the higher frequencies will be cut, thus giving the desired bass boost. As the volume control is turned down more, more current will flow through the diodes, D8 and D9 will start to conduct. This in turn will reduce the input to T7 and thus the output of T8, hereby reducing the total volume.

The bass boost will continue throughout the entire volume range, because D6 and D7 will always conduct more current than D8 and D9. Diode D5 is to turn off the AVC, thus achieving complete turn off of the amplifier with minimum volume. T9 is an emitter-follower to match the low impedance of the next stage. With volume control, the volume of both channels can be adjusted together. There are 2 switches each having 3 positions for adjusting the treble and bass.

### 3. PHASE SPLITTER AND OUTPUT STAGE ( PLATE III S )

The signal from T9 goes over amplifier T10 to the complementary pair phase splitters T11 and T12, these drive the transformerless push-pull output pair T13 and T14. The thermistor HL1 in base of T11 and T12 gives the circuit good thermal stability. Fine control P3 keeps both drivers symmetrical, and P4 adjusts the rest current ( nosignal ) of the output stage.
The overload protection is determined by the emitter current of the output stage. The voltage over R65, created by the emitter current flowing through it, is coupled to T15 over an integrating network with a time constant of 1 sec. When T15 starts conducting, the base of T16 becomes positive, thus placing point A in plate 1 at ground potential. This point is the voltage supply of the input stage. The audio signal is hereby completely cut-off. When the record rejects, the muting relay is energized. One of the muting contacts will bring the collector of T15 and the base of T16 back to negative, driving these transistors in cut-off, this on condition that the overload is removed from the circuit. In the muted state, the base of T10 is to ground over contacts S2 and S4, and the ground line to diode D3 is open over contacts S1 and S3.

# SPECIFICATIONS

### Electrical Dates:

| | |
|---|---|
| Line Voltage | 117 V. AC 60 cycles |
| Working Voltage | 30 V. DC |
| Power: standby | 70 W. |
| transfer and scan | 105 W. |
| play | 120 W. |

### Control Center:

| | |
|---|---|
| 1 Transformer for working voltage | 117 V. AC prim. 80/110/125 V. AC sec. I<br>30 V. AC sec. II |
| 1 Transformer for amplifier | 117 V. AC prim.<br>40 V. AC sec. |

### Fuses:

| | |
|---|---|
| 1 Line Voltage 117 V. AC | 3 3/10 Amp. slo blo |
| 1 Amplifier | 1 3/10 Amp. slo blo |
| 1 Working Voltage | 2 Amp. slo blo |
| 1 Accessoires connection (AMP) | as needed |
| 1 Electronic fuse | in the amplifier |

### Lighting:

| | |
|---|---|
| 1 Fluorescent lamp | F 30 T 8 30 W./33 |
| 1 Starter | FS — 4 |
| 1 Baliast | 117 V./30 W./0.65 Amp. |
| 2 Credit lights | 24 V./ 3 W. |
| 1 Safety lamp in Credit unit | 24 V./15 W. |
| 26 Indicator lamps (miniature GE 19) | 12 V./0.1 Amp. |

### Credit Unit:

| | |
|---|---|
| Credits | adjustable from 1 to 12 credits. (See note inside the lid) |
| Accumulation possible | up to 40 credits |

### Selection Circuit:

| | |
|---|---|
| 20 Letter buttons A — V | 2 sets of switches, each 10 × 2 contacts |
| 6 Number buttons 1 — 6 | 1 set of switches with 6 × 3 contacts |
| 1 Latch bar solenoid | 30 V. DC 100 % ED |
| 1 Selection motor | 30 V. AC |
| 4 Cam switches N 1 — N 4 | radio-shielded |
| 1 Magnetic core memory unit | 120 cores |
| ALBUM-selection | Adjustment see note in credit unit lid |

### Playing Mechanism:

1 Carriage base
with pre-selector unit and record magazine for 60 records alternatively 45 rpm or 33⅓ rpm, 7 inch diameter, mono or stereo, vertically located.

| | |
|---|---|
| 1 Popularity meter | 60 counting strips |
| 1 Total play meter | 4 digits |
| 1 Carriage with play motor (synchronous) | 80/125 V. AC 15/33 W. 1500 rpm, left and right hand turns. |
| 1 Clutch solenoid | 125 V. AC 100 % ED |
| 1 Trip solenoid | 30 V. DC 5 % ED |
| 1 Cartridge | ceramic DB 200 stereo/mono |
| 2 Needles | diamond D 102 stereo/mono |

### Amplifier:

| | |
|---|---|
| Stereo amplifier 70 S | with electronic fuse |
| Volume compensator | automatic (AVC) |
| Output stage | 2 × 2 N 30 55 in push-pull |
| Output capacity per channel | 60 W. music |
| Impedance | 4 Ohms output |
| Muting relay | 40 V. DC |
| 1 (Remote-) volume control | volume control for both channels and one reject button |
| 2 Woofers 10 inches | 8 Ohms 10 W. |
| 2 Tweeters DKS 6/13/100 pressure chamber system | 4 Ohms 6 W. |
| 1 Stereo network | 1.5 mHy / 32 µF |

### Locks and Keys:

| | |
|---|---|
| 1 Cabinet locks | K 37 LG |
| 2 Cabinet keys | |
| 1 Cash box lock | A 46 |
| 2 Cash box keys | different numbers. |

# CONSUL 120

50 Cycles

# SPARE PARTS LIST

PLEASE NOTE!

We recommend before using this Spare-Parts-List, that you carefully read the following instructions:

This illustrated Spare-Parts-List is recommended as a reference-list, and may be used for ordering the Spare-Parts-List for the NSM-Music Box

CONSUL 120

Each unit of built-in components has one or more pages on which all parts are illustrated.
Credit-unit, carriage and carriage base assy are being shown by means of explosive-drawings.
In the below shown lists are in the extreme left underneath "Position" the main numbers; these numbers refer to a group of parts which are separately illustrated. And slightly to the right are sub-numbers, these numbers coincide with the numbers in the drawings.

The letters L and M represent the continuation of a component list, whereby L designates the end of a list and M designates the start of the following page.

The second column of the table states the exact description of the parts, the third, the part numbers.
The dash (-) before the exact description of the parts is used to demonstrate the association of the parts.
A part with two dashes (--) belongs to the above part with one dash (-).
A part with three dashes (---) belongs to the above part with two dashes (--) etc.

The column on the extreme right refers to the number of times a part occurs in one unit.

This Spare-Parts-List refers only to the above specified NSM music-box type.
By each order of spare parts, we ask you, for you own interest to note the following:

1) Type of machine with serial number
2) Spare part number
3) Description of the part
4) Quantity of parts desired

**Example of an order:**

Consul 120 serial number . . . . . .
Part-number 23 077
Selector key
1 (ea)

Precise orders save unnecessary questions and bring the best results.

PLEASE ASK ONLY LÖWEN-AUTOMATEN FOR SPARE PARTS!

MODIFICATION BY TECHNICAL PROGRESS RESERVED

# SPARE PARTS LIST

## Cabinet - Consul 120 empty

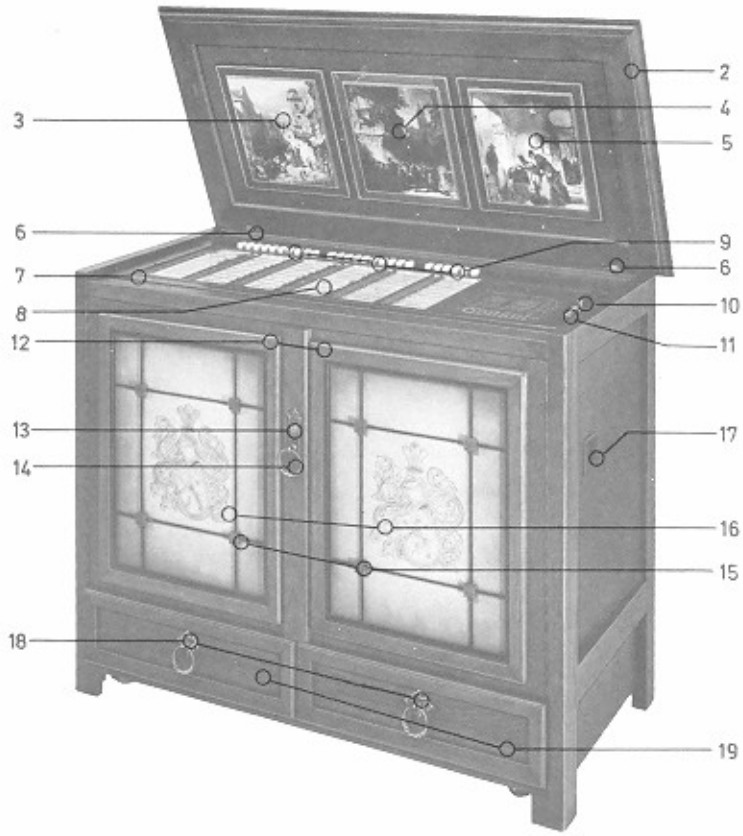


| POSITION | DESCRIPTION | PART NUMBER | QTY |
|---|---|---|---|
| 1 | CABINET CONSUL 120 (EMPTY) | 203125 | 1 |
| 2 | -UPPER-LID | 10200 | 1 |
| | LEATHER INSERT | 300155 | 1 |
| 3 | --PAINTING | 300158 | 1 |
| 4 | --PAINTING | 300156 | 1 |
| 5 | --PAINTING | 300157 | 1 |
| 6 | --HINGE | 201578 | 2 |
| 7 | -PROGRAM LID ASSEMBLY | 41798 | 1 |
| 8 | --PROGRAM GLASS | 204153 | 1 |
| 9 | --BUTTON A-V/1-6 | 29064 | |
| | --BUTTON A-V/1-6 | 29089 | |
| 10 | --COIN REJECT | 22641 | 1 |
| | PLUNGER ASSEMBLY | 41650 | 1 |
| | SPRING | 205265 | 1 |
| 11 | --COIN ENTRY | 200178 | 1 |
| 12 | -FRONT DOORS (DAIRS ONLY) | 10107 | 2 |
| 13 | --DOOR-LOCK | 207451 | 1 |
| 14 | --RING HANDLE (ANTIC) | 10116 | 1 |
| 15 | --DOOR ORNAMENT | 10109 | 2 |
| 16 | --DOOR LEATHER INSERT | 300102 | 2 |
| 17 | -COIN RETURN CUP | 41306 | 1 |
| 18 | -DRAWER HANDLE | 10117 | 2 |
| 19 | -SPEAKER GRILL | 207424 | 2 |
| | PRESSURE CHAMBER SYSTEM | 224092 | 2 |
| | TWEETER HORN | 202000 | 2 |
| | SPEAKER GRID | 23304 | 2 |
| | SPEAKER SCREEN | 207462 | 2 |
| | LOUDSPEAKER P 245 | 224094 | 2 |
| | CROSSOVER | 41657 | 1 |

# SPARE PARTS LIST

## Cabinet - Consul 120

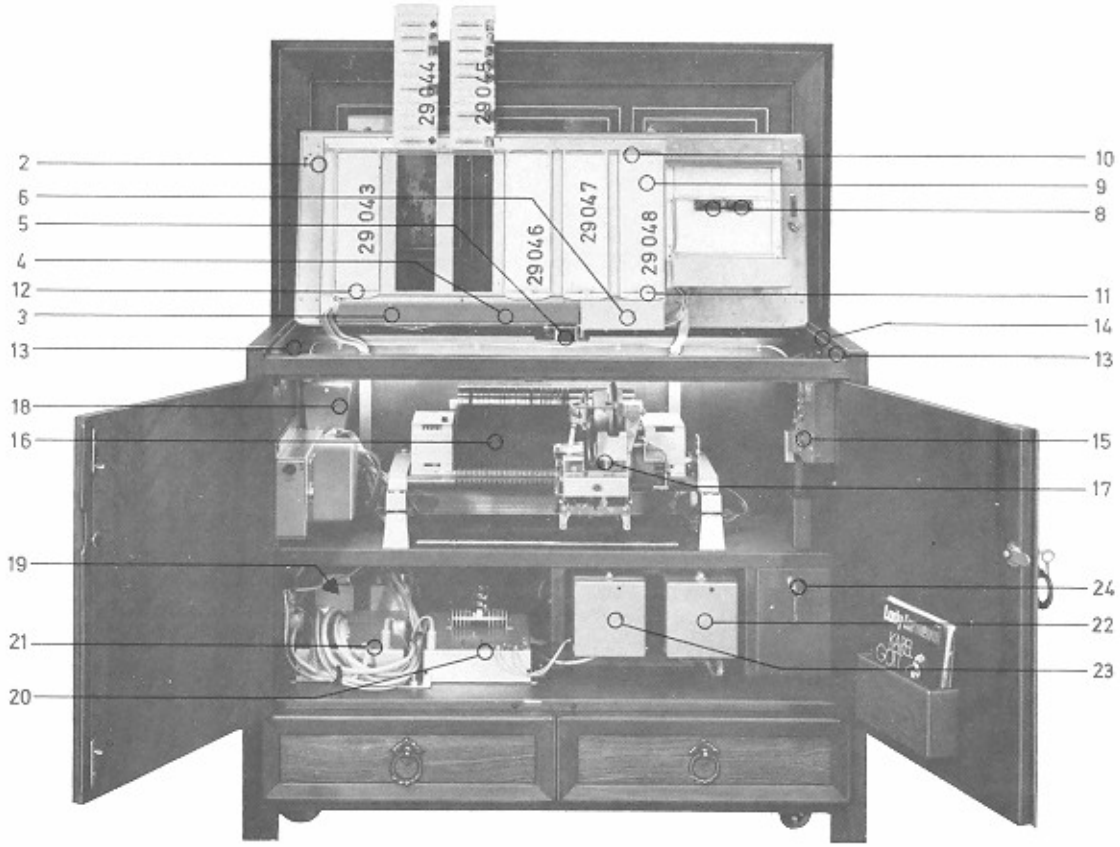


| POSITION | DESCRIPTION | PART NUMBER | QTY |
|---|---|---|---|
| 1 | CABINET CONSUL 120 SEE PAGE B 000 | | |
| 2 | -PROGRAM LID ASSEMBLY | 41798 | 1 |
| 3 | --SWITCH ASSY-LEFT (10 SWITCHES) | 41638 | 1 |
| 4 | --SWITCH ASSY-MIDDLE (10 SWITCHES) | 41637 | 1 |
| 5 | --LATCH BAR SOLENOID | 223185 | 1 |
| 6 | --SWITCH ASSY-RIGHT (6 SWITCHES) | 41636 | 1 |
| 7 | --INDICATOR ASSEMBLY | 41799 | 1 |
| | BULBS NR.19 GE 12 V 0.1A | 226036 | 26 |
| 8 | --CREDIT LIGHT HOLDERS ASSEMBLY | 41588 | 2 |
| | BULBS 24 V 3 W | 226028 | 2 |
| 9 | --TITLE STRIP HOLDERS | 29043 | 1 |
| | --TITLE STRIP HOLDERS | 29044 | 1 |
| | --TITLE STRIP HOLDERS | 29045 | 1 |
| | --TITLE STRIP HOLDERS | 29046 | 1 |
| | --TITLE STRIP HOLDERS | 29047 | 1 |
| | --TITLE STRIP HOLDERS | 29048 | 1 |
| 10 | --ROD | 23288 | 1 |
| 11 | ---LATCH ROLL | 29041 | 6 |
| 12 | ---SPRING | 205264 | 6 |
| 13 | --CLOSING RACK | 23276 | 2 |
| | ROLL | 23277 | 2 |
| | TORSION SPRING, LEFT | 205377 | 1 |
| | TORSION SPRING, RIGHT | 205378 | 1 |
| 14 | -PLUNGER ASSEMBLY | 41592 | 2 |
| 15 | -COIN MECHANISM SEE PAGE M 000 | | |
| 16 | -CARRIAGE BASE SEE PAGE G 000 | | |
| 17 | -CARRIAGE SEE PAGE L 000 | | |
| 18 | -VOLUME CONTROL SEE PAGE R 000 | | |
| | OUTSIDE FRAME | 29061 | 1 |
| | SPACER | 23247 | 2 |
| | INSIDE FRAME | 23248 | 1 |
| | BACKPLATE | 23249 | 1 |
| 18L | CONTINUED 1 | | |

# SPARE PARTS LIST

## Cabinet - Consul 120

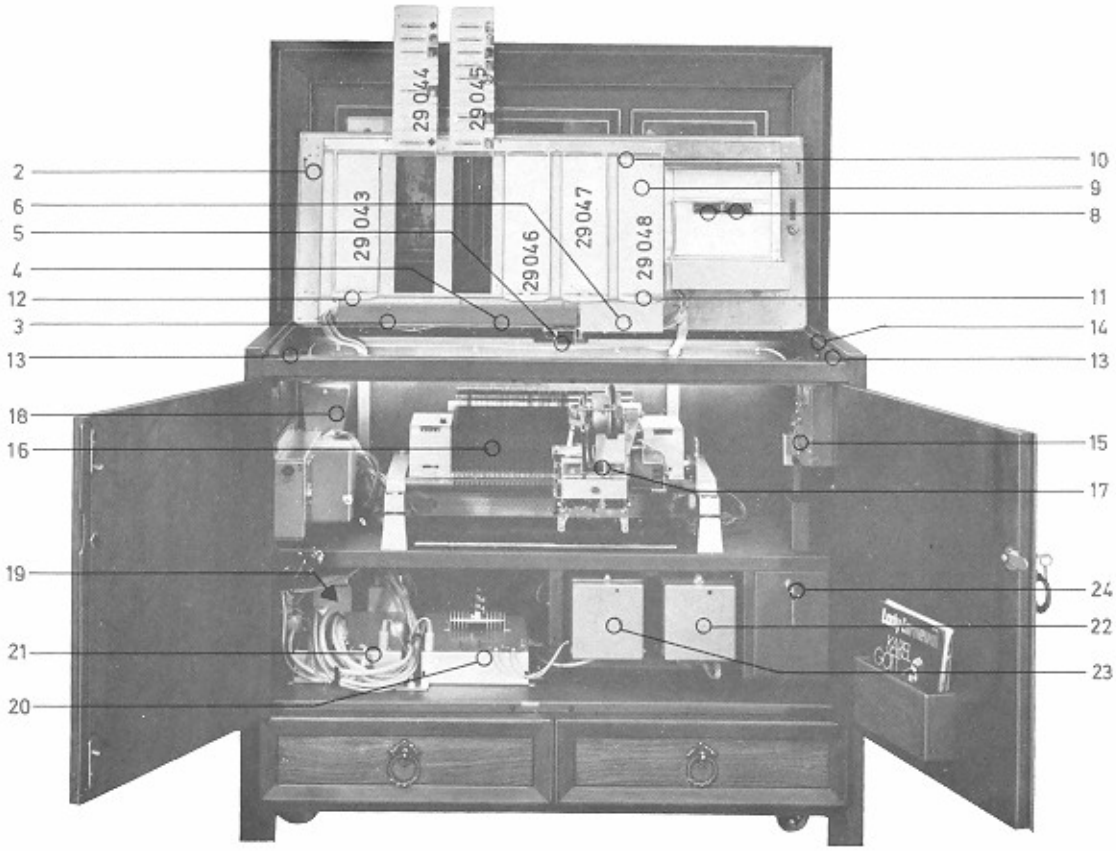


| POSITION | DESCRIPTION | PART NUMBER | QTY | |
|---|---|---|---|---|
| 18M | CONTINUED 1 | | | |
| 19 | -JUNCTION PLATE ASSEMBLY | 41658 | 1 | |
| 20 | ALTERNATIVE : | | | |
| | -STEREO-AMPLIFIER 70 S SEE PAGE VS 000 | | | |
| | -MONO-AMPLIFIER 35 M SEE PAGE VM 000 | | | |
| 21 | -CONTROL CENTRE 220/50 SEE PAGE S 000 | | | |
| 22 | -CREDIT UNIT 40/I SEE PAGE K 000 | | | |
| 23 | -OUTPUT TRANSFORMER | 41622 | 1 | |
| 24 | --CASH BOX LOCK | 207452 | 1 | |
| | FLUORESCENT LIGHT | 226033 | 1 | |
| | SOCKET | 225241 | 1 | |
| | SOCKET FOR STARTER | 225240 | 1 | |
| | STARTER FOR 30 W | 225040 | 1 | |
| | BALLAST | 224080 | 1 | |

# SPARE PARTS LIST

## Carriage Base - Consul 120

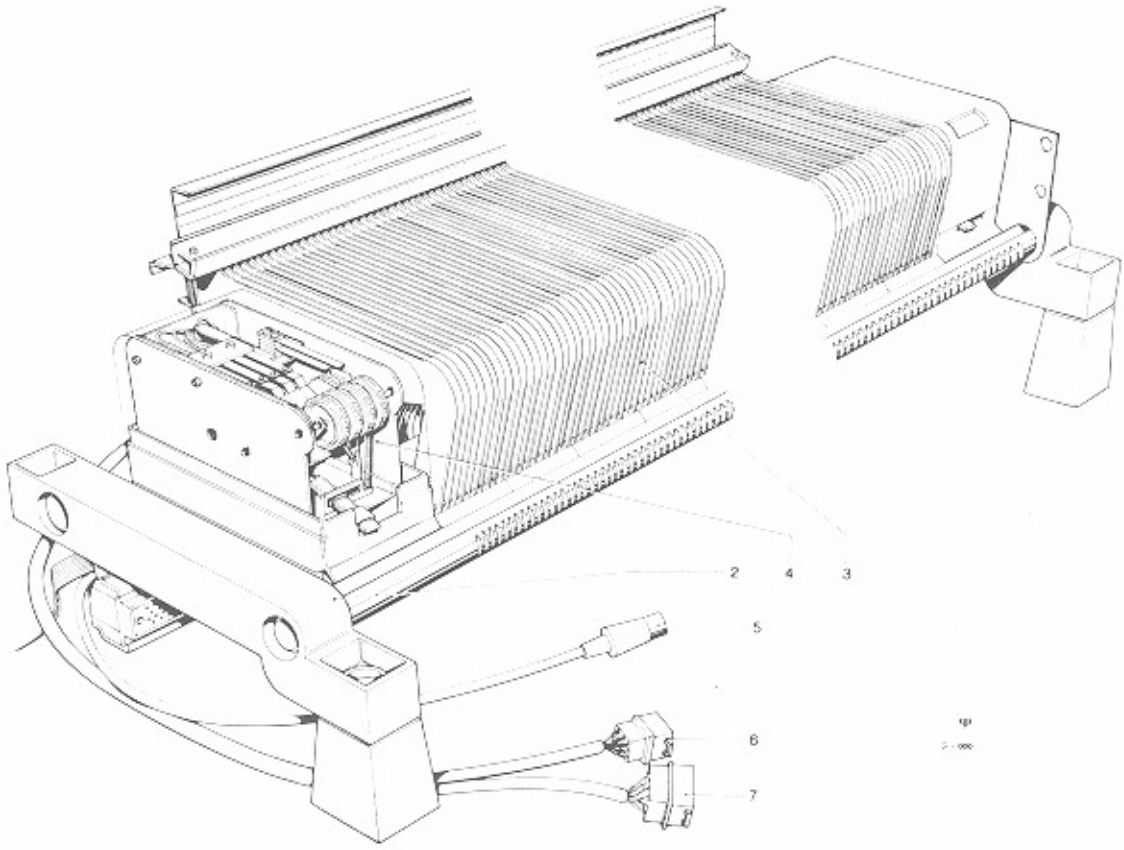


| POSITION | DESCRIPTION | | PART NUMBER | QTY | |
|---|---|---|---|---|---|
| 1 | CARRIAGE BASE CONSUL 120 | | | | |
| 2 | -CARRIAGE BASE | SEE PAGE G 100 | | | |
| 3 | -MAGAZINE | SEE PAGE G 200 | | | |
| 4 | -SCAN CONTROL BOX | SEE PAGE G 300 | | | |
| 5 | -PLUG MAS 300 | | 225062 | | |
| 6 | -AMP PLUG 9 PRONG BLUE | | 23022 | | |
| 7 | -AMP PLUG 12 PRONG WHITE | | 225183 | | |

## Carriage base 120

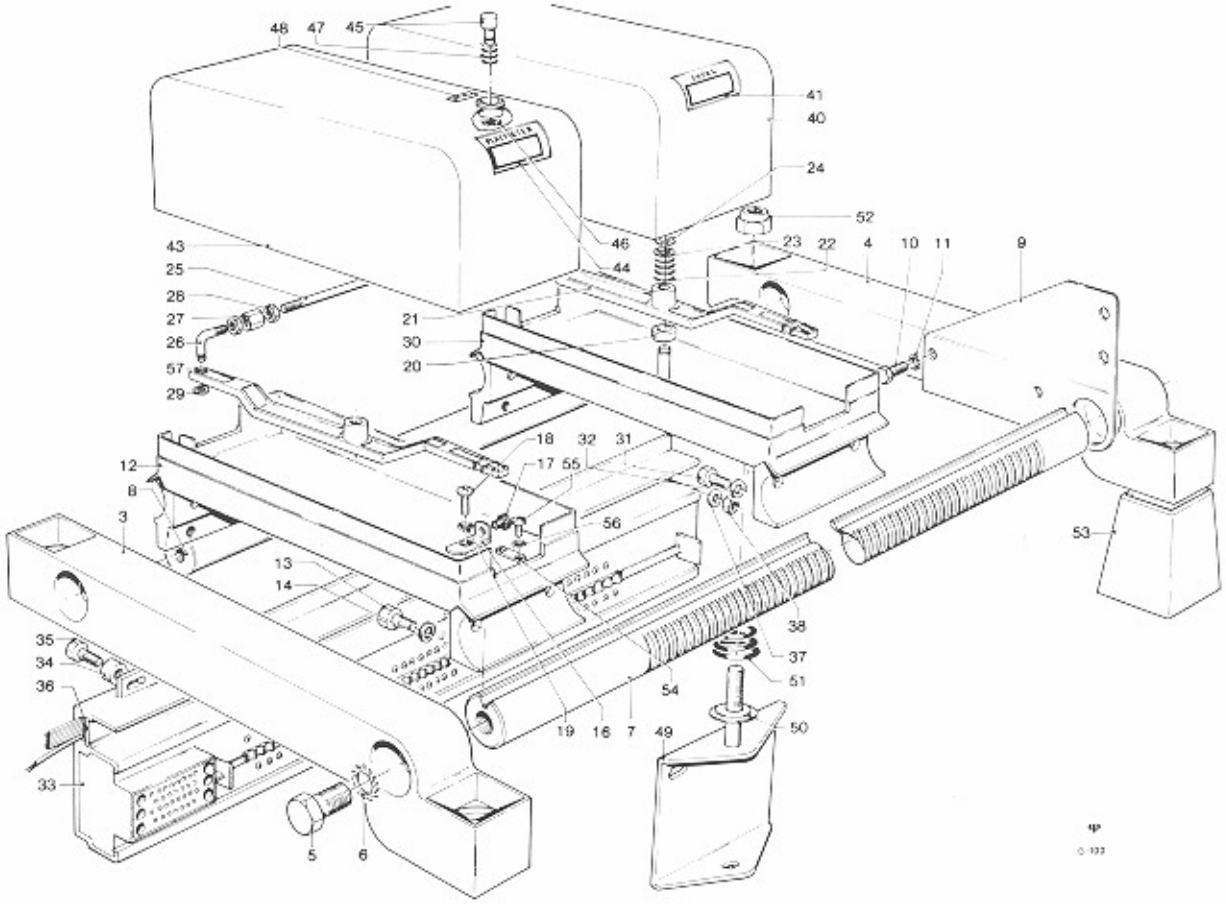


| POSITION | | DESCRIPTION | PART NUMBER | QTY |
|---|---|---|---|---|
| 1 | | CARRIAGE BASE | | |
| 2 | | -CARRIAGE BASE ASSEMBLY | 41595 | 1 |
| | 3 | --CONNECTING BRACKET, LEFT | 200253 | 1 |
| | 4 | --CONNECTING BRACKET, RIGHT | 200258 | 1 |
| | 5 | --SCREW M 10X15 DIN 933 | | 4 |
| | 6 | --LOCKWASHER 10 | | 4 |
| | 7 | --GEAR RACK | 23282 | 1 |
| | 8 | --CONNECTING BAR | 23283 | 1 |
| | 9 | --ENDPLATE | 23170 | 1 |
| | 10 | --SCREW M 8X15 DIN 933 | | 2 |
| | 11 | --LOCKWASHER 8 | | 2 |
| | 12 | --BRACKET | 200254 | 1 |
| | 13 | --SCREW M 8X15 DIN 933 | | 4 |
| | 14 | --WASHER 8,4 DIN 433 | | 4 |
| 15 | | --L-BRACKET ASSEMBLY | | 2 |
| | 16 | ---L-BRACKET | 23065 | 2 |
| | 17 | ---BUMPER | 207095 | 2 |
| | 18 | --SCREW M 5X8 DIN 7985 | | 2 |
| | 19 | --LOCKWASHER 5 | | 2 |
| | 20 | --SPACER | 23224 | 1 |
| | 21 | --SWITCH LEVER | 200257 | 1 |
| | 22 | --PRESSURE SPRING | 205351 | 1 |
| | 23 | --WASHER 6,2X10X0,2 | | 1 |
| | 24 | --E-WASHER 5 DIN 6799 | | 1 |
| | 25 | --CONNECTING ROD, LONG | 23289 | 1 |
| | 26 | --CONNECTING ROD, SHORT | 23237 | 1 |
| | 27 | --ADJUSTING NUT | 23236 | 1 |
| | 28 | --LOCKING NUT BM 3 DIN 439 | | 2 |
| 28L | | CONTINUED 1 | | |

# SPARE PARTS LIST

## Carriage base 120

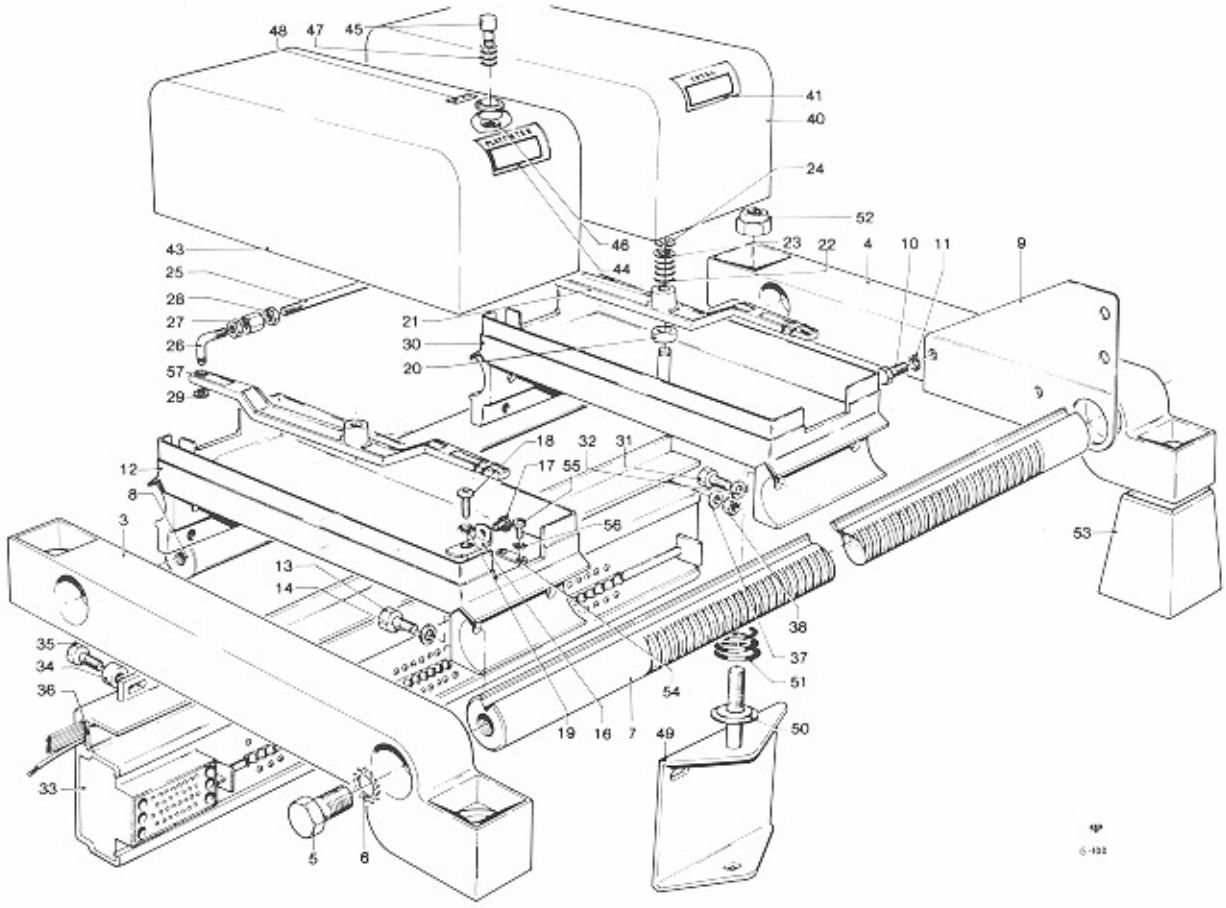


| POSITION | DESCRIPTION | PART NUMBER | QTY |
|---|---|---|---|
| 28M | CONTINUED 1 | | |
| 29 | --E-WASHER 2,3 DIN 6799 | | 2 |
| 30 | --BRACKET ASSEMBLY, RIGHT | 41459 | 1 |
| 31 | --SCREW M 8X15 DIN 933 | | 4 |
| 32 | --WASHER 8,4 DIN 433 | | 4 |
| 33 | --MEMORY UNIT ASSEMBLY | 41604 | 1 |
| 34 | --SPACER | 23226 | 4 |
| 35 | --SCREW M 5X20 DIN 931 | | 4 |
| 36 | --CONTACT PLATE WITH HARNESS | 41598 | 1 |
| 37 | --WASHER 5,3 DIN 433 | | 1 |
| 38 | --NUT BM 5 DIN 439 | | 1 |
| 39 | --COVER ASSEMBLY, RIGHT | | 1 |
| 40 | ---COVER | 200255 | 1 |
| 41 | ---WINDOW | 215360 | 1 |
| 42 | --COVER ASSEMBLY, LEFT | 41488 | 1 |
| 43 | ---COVER | 200259 | 1 |
| 44 | ---WINDOW | 215359 | 1 |
| 45 | ---SCAN BUTTON | 29034 | 1 |
| 46 | ---E-WASHER 3,2 DIN 6799 | | 1 |
| 47 | ---PRESSURE SPRING | 205340 | 1 |
| 48 | ---LABEL | 215350 | 1 |
| 49 | --SUPPORT BRACKET ASSEMBLY | 41553 | 2 |
| 50 | --WASHER | 202815 | 4 |
| 51 | --CONESPRING | 205353 | 4 |
| 52 | --NUT M 10 DIN 985 | | 4 |
| 53 | --STAND | 200256 | 2 |
| 54 | --LOCKING PLATE | 23064 | 1 |
| 55 | --SCREW M 5X8 DIN 7985 | | 1 |
| 56 | --LOCKWASHER 5 | | 1 |
| 57 | -SWITCH LEVER SEE PAGE G 300 | | |

# SPARE PARTS LIST

## Magazine

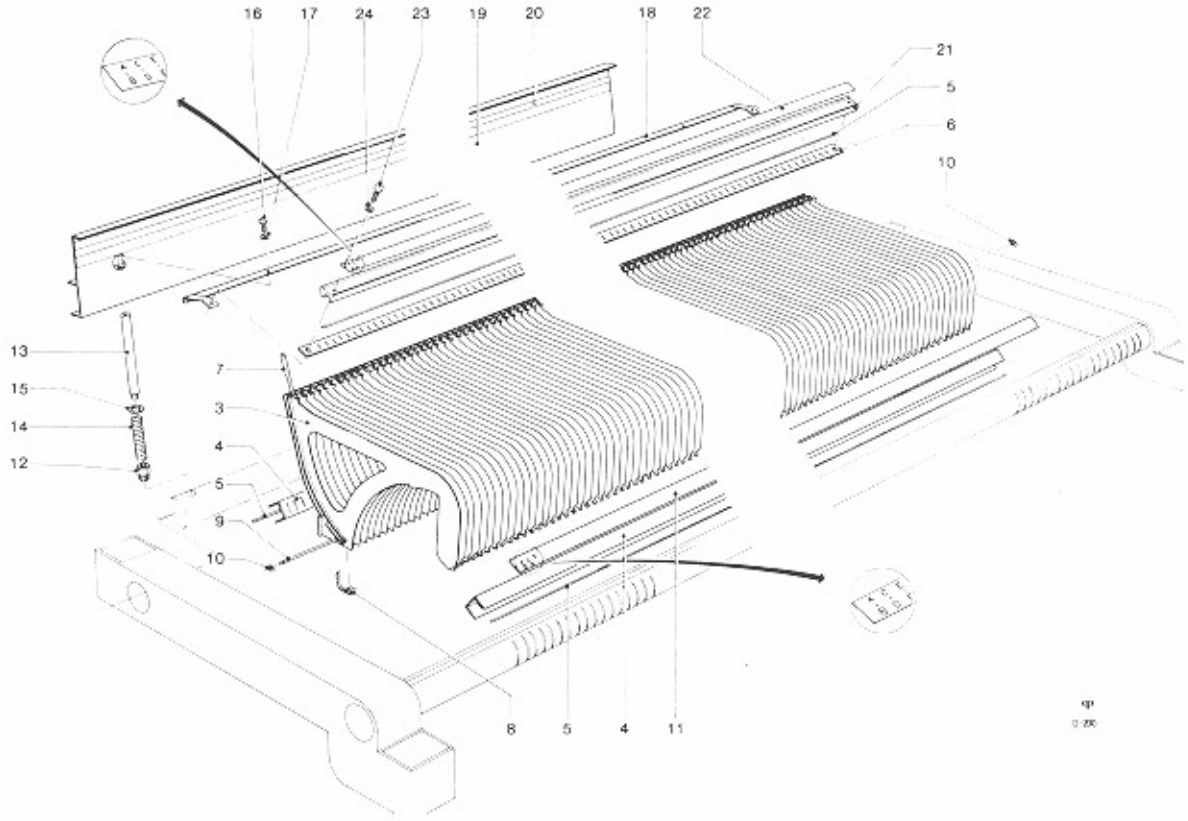


| POSITION | DESCRIPTION | PART NUMBER | QTY |
|---|---|---|---|
| 1 | MAGAZINE | | |
| 2 | -MAGAZINE ASSEMBLY | | 1 |
| 3 | --DIVIDER | 29058 | 61 |
| 4 | --DIVIDER FRAME | 29296 | 2 |
| 5 | --WIRE ROD | 23285 | 3 |
| 6 | --SPACING PLATE | 23284 | 1 |
| 7 | --POPULARITY INDICATOR | 29059 | 60 |
| 8 | --INDICATOR LEVER | 29060 | 60 |
| 9 | --PIVOT ROD | 23286 | 1 |
| 10 | --E-WASHER 1,9 DIN 6799 | | 2 |
| 11 | --NUMBER STRIP | 215101 | 1 |
| 12 | -NUT SCREW | 23231 | 2 |
| 13 | -GUIDE PIN | 23230 | 2 |
| 14 | -PRESSURE SPRING | 205339 | 2 |
| 15 | -WASHER 8,2X12X0,4 | | 2 |
| 16 | -SCREW M 4X6 DIN 7985 | | 2 |
| 17 | -WASHER 4,3 DIN 125 | | 2 |
| 18 | -CONNECTING ANGLE | 41596 | 1 |
| 19 | -POPULARITY PROFILE | 200326 | 1 |
| 20 | -SCALE STRIP | 215102 | 1 |
| 21 | -NUMBER STRIP PROFILE | 200325 | 1 |
| 22 | -NUMBER STRIP | 215103 | 1 |
| 23 | -SCREW AM 3X15 DIN 7985 | | 2 |
| 24 | -WASHER 3,2 DIN 125 | | 2 |

# SPARE PARTS LIST

## Carriage base with Selector control

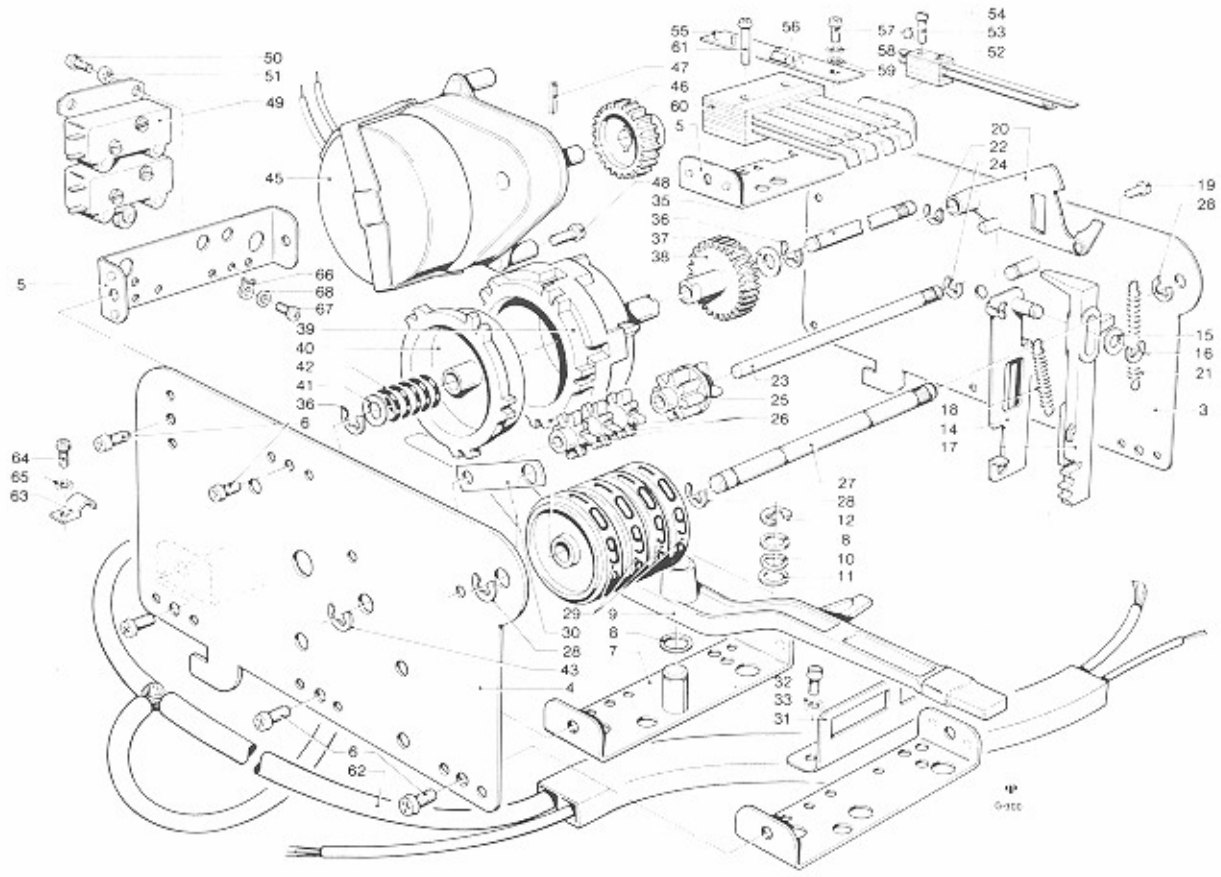


| POSITION | | DESCRIPTION | PART NUMBER | QTY |
|---|---|---|---|---|
| 1 | | SCAN CONTROL | | |
| 2 | | -SCAN CONTROL BOX ASSEMBLY | 41611 | 1 |
| | 3 | --PLATE, STAMPED | 41456 | 1 |
| | 4 | --PLATE | 23054 | 1 |
| | 5 | --U-BRACKET | 23051 | 4 |
| | 6 | --SCREW AM 3X4 DIN 7985 | | 10 |
| | 7 | --U-BRACKET, STAMPED | 41457 | 1 |
| | 8 | --WASHER 6,2X10X0,2 | | 2 |
| | 9 | --SWITCH LEVER | 200257 | 1 |
| | 10 | --BEARING WASHER 9,8X6,2X0,2 | | 1 |
| | 11 | --WASHER 6,2X11X0,5 | | 1 |
| | 12 | --E-WASHER 4 DIN 6799 | | 1 |
| 13 | | --STEP SWITCH ASSEMBLY | 10163 | 1 |
| | 14 | ---BRACKET, STAMPED | 41458 | 1 |
| | 15 | ---WASHER 6X3,1X0,2 | | 1 |
| | 16 | ---E-WASHER 2,3 DIN 6799 | | 1 |
| | 17 | ---STEP LEVER | 202687 | 1 |
| | 18 | ---TENSION SPRING | 205328 | 1 |
| | 19 | --SCREW AM 3X5 DIN 7985 | | 2 |
| | 20 | --PAWL ASSEMBLY | 41484 | 1 |
| | 21 | --TENSION SPRING | 205327 | 1 |
| | 22 | --E-WASHER 3,2 DIN 6799 | | 1 |
| | 23 | --SHAFT | 23068 | 1 |
| | 24 | --E-WASHER 1,9 DIN 6799 | | 2 |
| | 25 | --STEP GEAR | 202686 | 1 |
| | 26 | --DRIVE GEAR | 202685 | 3 |
| | 27 | --SHAFT | 23067 | 1 |
| | 28 | --E-WASHER 3,2 DIN 6799 | | 6 |
| | 29 | --NUMBER DISC | 202684 | 4 |
| | 30 | --SHAFT PLATE | 23066 | 1 |
| | 31 | --GUIDE PLATE | 23052 | 2 |
| | 32 | --SCREW M 3X4 DIN 84 | | 4 |
| | 33 | --LOCKWASHER 3 | | 4 |
| 33L | | CONTINUED 1 | | |

# SPARE PARTS LIST

## Carriage base with Selector control

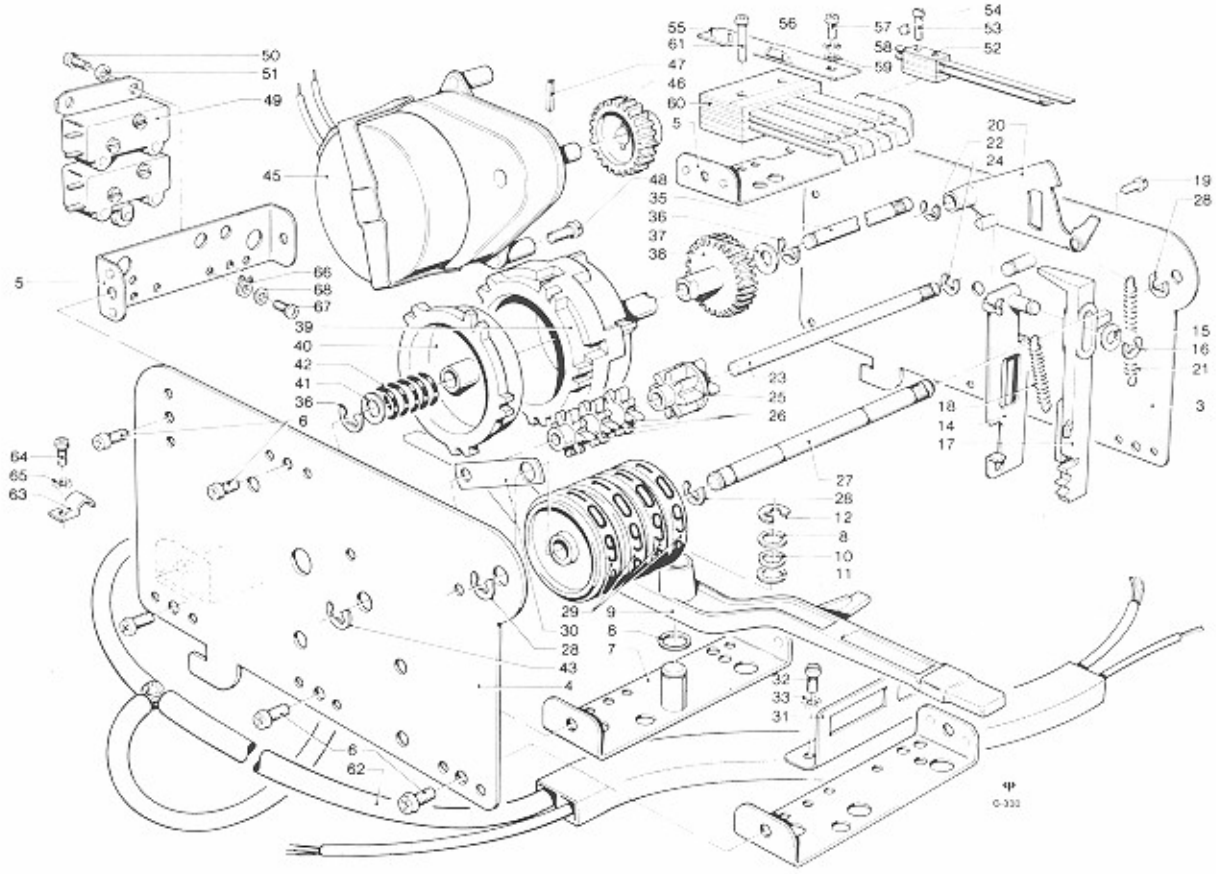


| POSITION | DESCRIPTION | PART NUMBER | QTY |
|---|---|---|---|
| 33M | CONTINUED 1 | | |
| 34 | --CAM ASSEMBLY | 10162 | 1 |
| 35 | ---SHAFT | 23067 | 1 |
| 36 | ---E-WASHER 3,2 DIN 6799 | | 4 |
| 37 | ---WASHER 4,3X8X0.2 | | 1 |
| 38 | ---WING GEAR | 202689 | 1 |
| 39 | ---CAM I | 202680 | 1 |
| 40 | ---CAM DISC II | 202681 | 1 |
| 41 | ---WASHER 4,3X11X0,5 | | 1 |
| 42 | ---PRESSURE SPRING | 205329 | 1 |
| 43 | --E-WASHER 3,2 DIN 6799 | | 1 |
| 44 | --SELECTION MOTOR ASSEMBLY | 41460 | 1 |
| 45 | ---MOTOR, STAMPED | 41460 | 1 |
| 46 | ---GEAR | 202688 | 1 |
| 47 | ---DRIVE PIN 1,5X8 DIN 1481 | | 1 |
| 48 | --SCREW AM 3X6 DIN 7985 | | 2 |
| 49 | --MICRO SWITCH ASSEMBLY | 222196 | 1 |
| 50 | --SCREW AM 3X5 DIN 7985 | | 2 |
| 51 | --WASHER 3,1X6,7X1 | | 2 |
| 52 | --SWITCH BLADE ASSEMBLY | 222194 | 1 |
| 53 | --SCREW AM 2,3X15 DIN 84 | | 2 |
| 54 | --VARISTOR E299 DD/P 344 | 221103 | 1 |
| 55 | --CONNECTION PLATE, ASSEMBLED | 207409 | 1 |
| 56 | ---DIODE 1N 4004 | 221115 | 1 |
| 57 | --SCREW AM 3X5 DIN 7985 | | 1 |
| 58 | --LOCKWASHER 3 | | 1 |
| 59 | --WASHER 3,2 DIN 125 | | 1 |
| 60 | --SWITCH BLADE ASSEMBLY | 222191 | 1 |
| 61 | --SCREW AM 3X15 DIN 7985 | | 2 |
| 62 | --HARNESS | 41610 | 1 |
| 63 | --CABLE CLAMP 7 Ø | 229010 | 1 |
| 64 | --SCREW AM 4X4 DIN 7985 | | 1 |
| 65 | --LOCKWASHER 4 | | 1 |
| 66 | --SOLDER LUG L 690 B/3,2 | 229079 | 1 |
| 67 | --SCREW AM 3X4 DIN 7985 | | 1 |
| 68 | --WASHER 3,1X6,7X1 | | 1 |

# SPARE PARTS LIST

## Credit unit 40/I

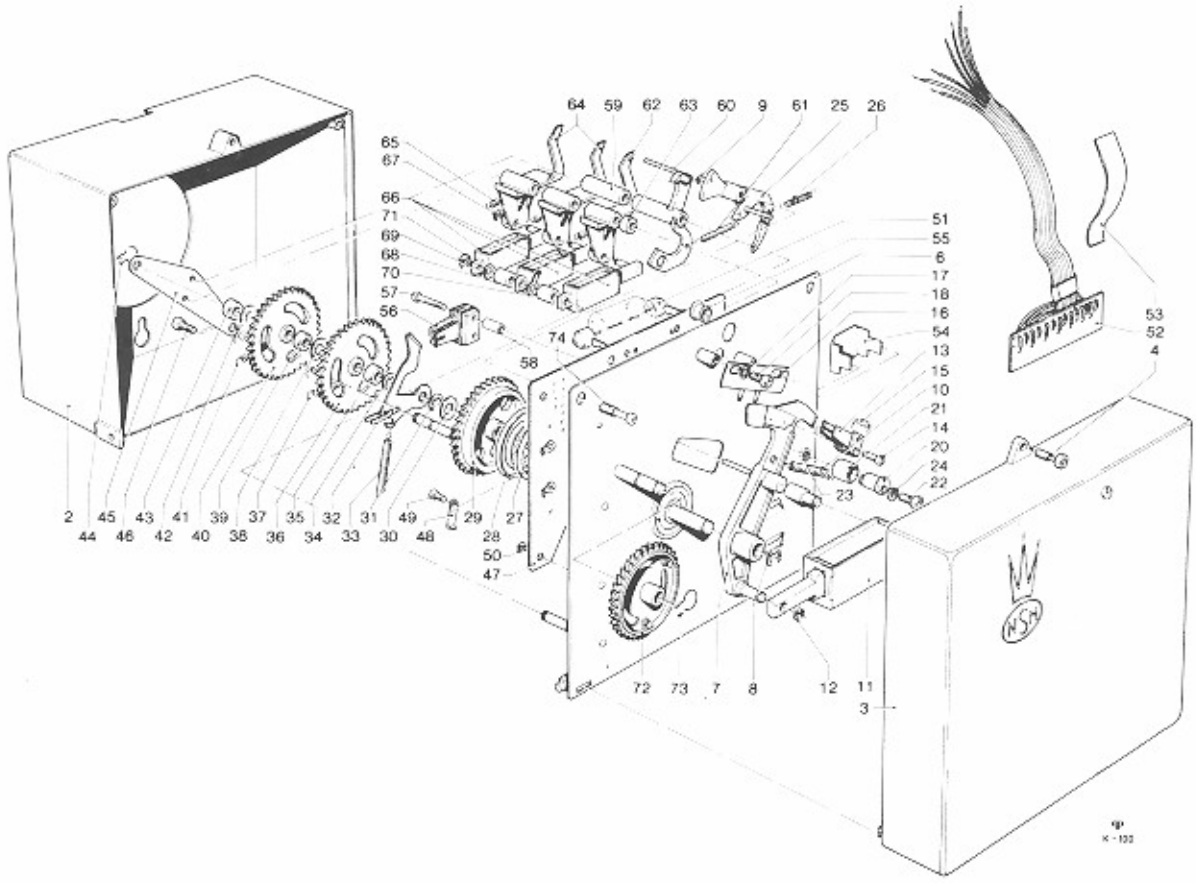


| POSITION | | DESCRIPTION | PART NUMBER | QTY | |
|---|---|---|---|---|---|
| 1 | | CREDIT UNIT 40/I | 41522 | 1 | |
| | 2 | -HOUSING | 202927 | 1 | |
| | 3 | -COVER ASSEMBLY | 202776 | 1 | |
| | 4 | --SCREW BM 4X15X5 DIN 7986 | | 1 | |
| 5 | | -BASE PLATE ASSEMBLY | | 1 | |
| | 6 | --BASE PLATE, STAMPED | 41534 | 1 | |
| | 7 | -SUBTRACT LEVER ASSEMBLY | 41548 | 1 | |
| | 8 | --E-WASHER 3,2 DIN 6799 | | 1 | |
| | 9 | --E-WASHER 1,9 DIN 6799 | | 1 | |
| | 10 | -TENSION SPRING FOR SUBTRACTION | 205344 | 1 | |
| | 11 | -SUBTRACT SOLENOID ASSEMBLY | 223190 | 1 | |
| | 12 | --E-WASHER 3,2 DIN 6799 | | 2 | |
| | 13 | -CARRY OVER SWITCH ASSEMBLY | 222224 | 1 | |
| | 14 | -SCREW M 2,3X14 DIN 84 | | 2 | |
| | 15 | -DIODE 1N 4004 | 221115 | 1 | |
| | 16 | -WRITE-IN TRIGGER SWITCH ASSY | 41549 | 1 | |
| | 17 | -WASHER 3 DIN 433 | | 2 | |
| | 18 | -SCREW AM 3X5 DIN 7986 | | 2 | |
| 19 | | -ECCENTRIC ASSEMBLY | | 1 | |
| | 20 | --ECCENTRIC | 29052 | 1 | |
| | 21 | --RUBBER | 207416 | 1 | |
| | 22 | -SCREW AM 3X12 DIN 7986 | | 1 | |
| | 23 | -LOCKWASHER 3 | | 1 | |
| | 24 | -SPRING WASHER A 3 DIN 127 | | 1 | |
| | 25 | -SUBTRACT PAWL ASSEMBLY | 41547 | 1 | |
| | 26 | -TENSION SPRING FOR SUBTRACT PAWL | 205347 | 1 | |
| | 27 | -SPACER | 23301 | 1 | |
| | 28 | -TORSION SPRING | 205352 | 1 | |
| | 29 | -CREDIT WHEEL II ASSEMBLY | 41541 | 1 | |
| | 30 | -WASHER 4,2X11X0,2 | | 1 | |
| | 31 | -E-WASHER 3,2 DIN 6799 | | 1 | |
| | 32 | -SINGLE ALBUM SWITCH CONTACT LEVER | 41544 | 1 | |
| | 33 | -TENSION SPRING | 205348 | 1 | |
| | 34 | -E-WASHER 3,2 DIN 6799 | | 1 | |
| | 35 | -SPACER | 29054 | 1 | |
| | 36 | -CREDIT WHEEL III ASSEMBLY | 41542 | 1 | |
| | 37 | -TENSION SPRING | 205278 | 1 | |

37L CONTINUED 1

## Credit unit 40/I

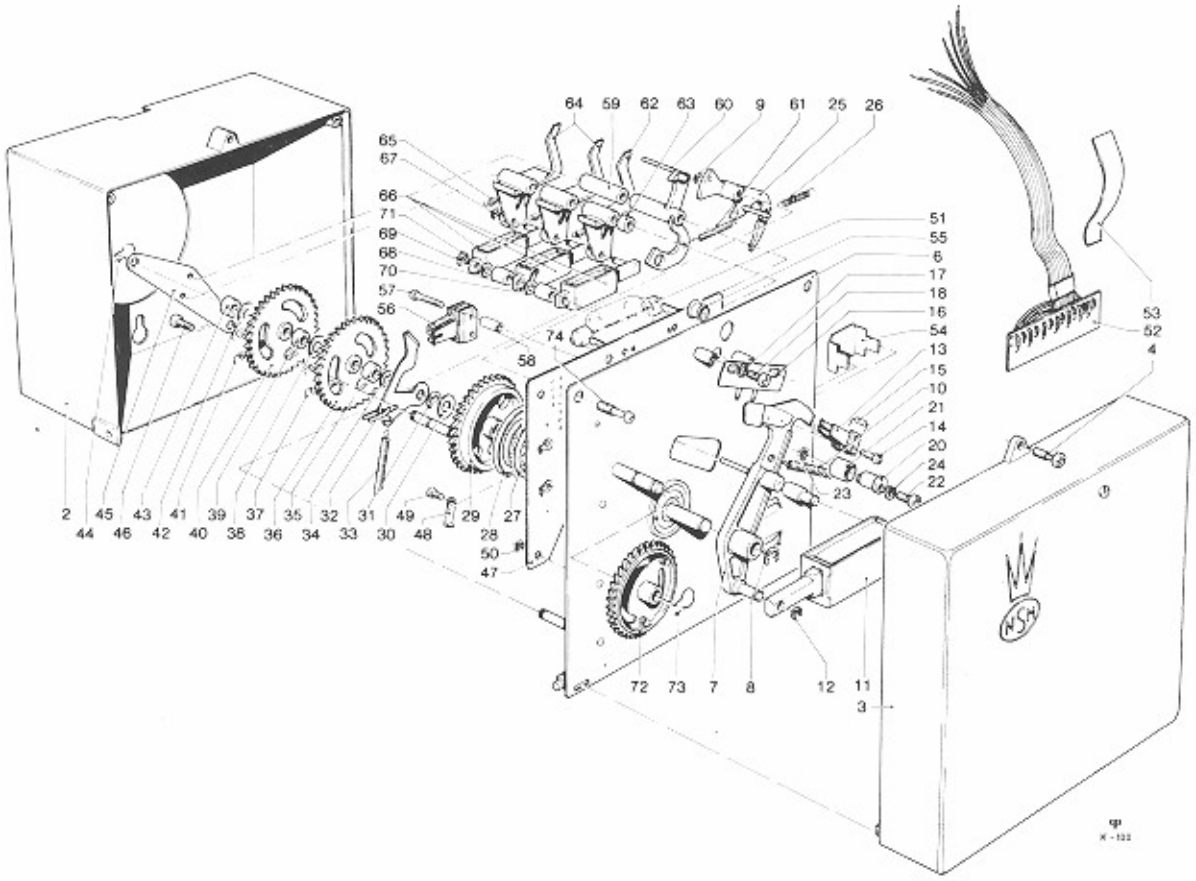


| POSITION | DESCRIPTION | PART NUMBER | QTY |
|---|---|---|---|
| 37M | CONTINUED 1 | | |
| 38 | -WASHER 4,2X11X0,2 | | 1 |
| 39 | -SPACER | 29053 | 1 |
| 40 | -CREDIT WHEEL IV ASSEMBLY | 41543 | 1 |
| 41 | -TENSION SPRING | 205278 | 1 |
| 42 | -WASHER 4,2X11X0,2 | | 1 |
| 43 | -SPACER | 29053 | 1 |
| 44 | -CLIP | 205256 | 1 |
| 45 | -CENTERING PLATE | 23166 | 1 |
| 46 | -SCREW AM 3X5 DIN 7986 | | 1 |
| 47 | -CONTACT PLATE FOR SINGLE ALBUM SWITCH | 207406 | 1 |
| 48 | -CONTACT JUMPER | 10021 | 2 |
| 49 | -SCREW M 3X4 DIN 7986 | | 2 |
| 50 | -E-WASHER 2,3 DIN 6799 | | 3 |
| 51 | -LAMP 24 V 18 W | 226037 | 1 |
| 52 | -HARNESS ASSEMBLY | 41552 | 1 |
| 53 | -HARNESS PROTECTOR | 23198 | 1 |
| 54 | -CABLE CLAMP | 229096 | 1 |
| 55 | -GROMMET | 28005 | 1 |
| 56 | -CREDIT SWITCH ASSEMBLY | 222223 | 1 |
| 57 | -SCREW M 2,3X22 DIN 84 | | 2 |
| 58 | -SPACER | 23197 | 2 |
| 59 | -SPACER | 29054 | 1 |
| 60 | -STOP PAWL | 202787 | 1 |
| 61 | -TENSION SPRING FOR STOP PAWL | 205345 | 1 |
| 62 | -RELEASE PAWL ASSEMBLY | 41546 | 1 |
| 63 | -SPACER | 29057 | 1 |
| 64 | -RELEASE PAWL ASSEMBLY | 41554 | 2 |
| 65 | -TENSION SPRING FOR RELEASE PAWL | 205346 | 3 |
| 66 | -ADD SOLENOID ASSEMBLY | 223191 | 3 |
| 67 | -E-WASHER 2,3 DIN 6799 | | 3 |
| 68 | -SPACER | 23196 | 2 |
| 69 | -WASHER 4X6X0,5 | | 1 |
| 70 | -LUG L 804 B | 229095 | 1 |
| 71 | -E-WASHER 3,2 DIN 6799 | | 1 |
| 72 | -CREDIT WHEEL V ASSEMBLY | 41550 | 1 |
| 73 | -CLIP | 205256 | 1 |
| 74 | -SCREW BM 4X15X5 DIN 7986 | | 2 |

# SPARE PARTS LIST

## Carriage

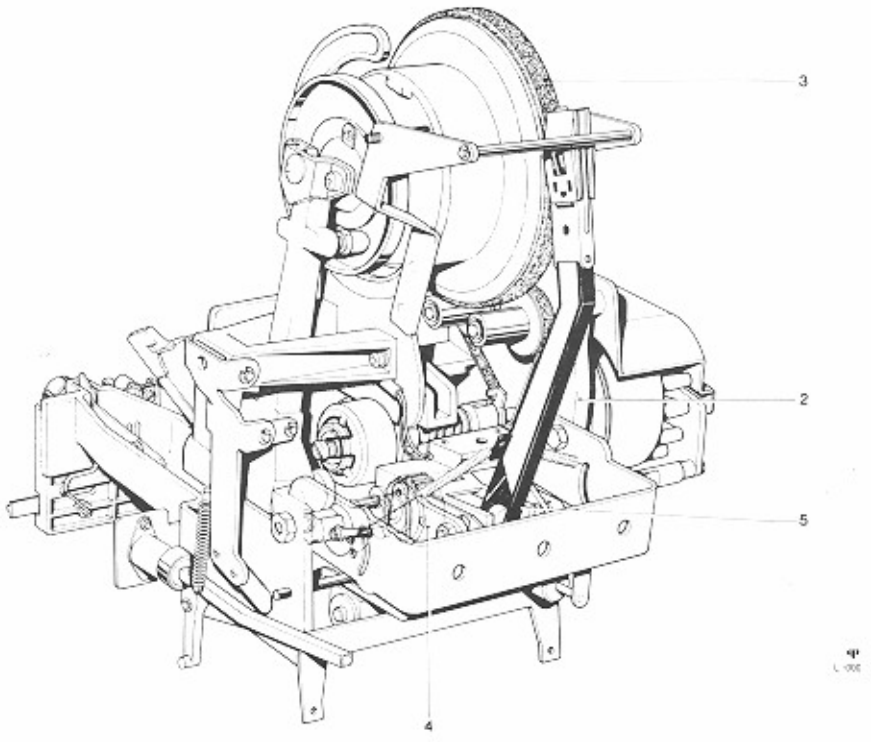


| POSITION | DESCRIPTION | | PART NUMBER | QTY | |
|---|---|---|---|---|---|
| 1 | CARRIAGE | | 41491 | 1 | |
| 2 | -CARRIAGE FRAME | SEE PAGE L 100 | | | |
| 3 | -CARRIAGE DRIVE | SEE PAGE L 200 | | | |
| 4 | -TRANSFER AND TONE ARM DRIVE | SEE PAGE L 300 | | | |
| 5 | -RECORD DRIVE AND TONE ARM | SEE PAGE L 400 | | | |

## Carriage chassis

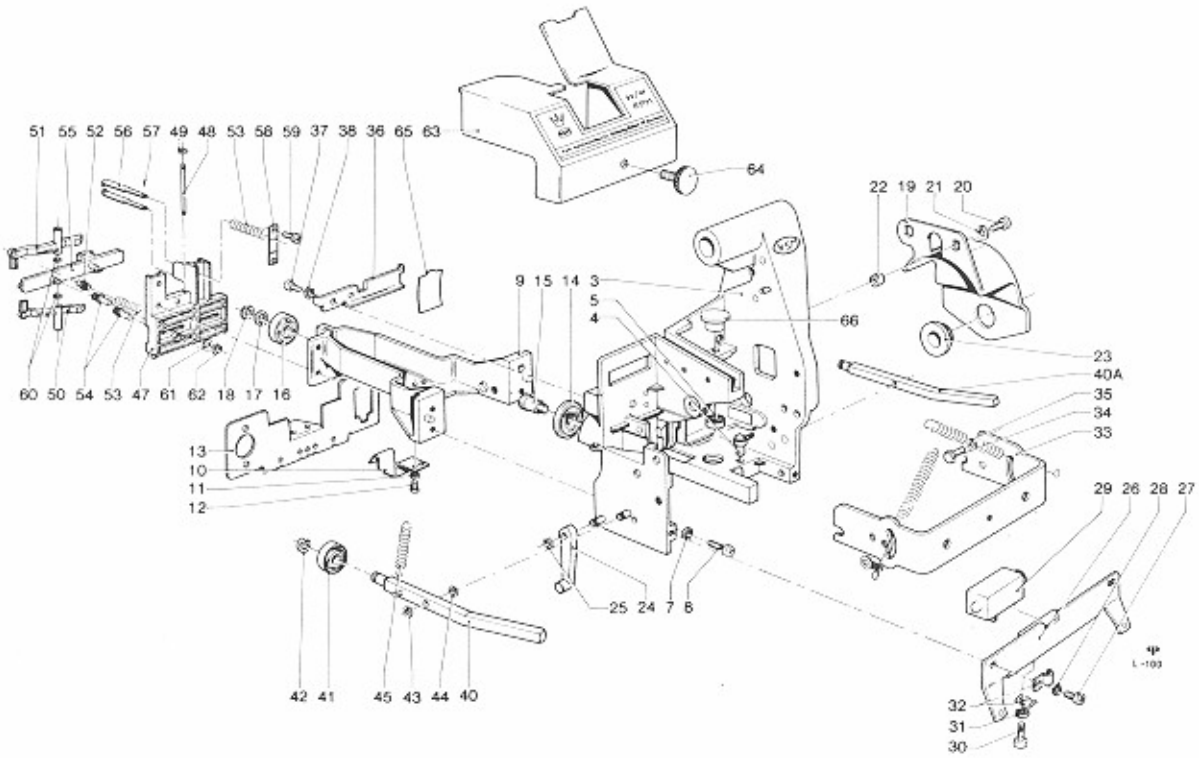


| POSITION | DESCRIPTION | PART NUMBER | QTY |
|---|---|---|---|
| 1 | CARRIAGE | | |
| 2 | -CARRIAGE CHASSIS ASSEMBLY | 41482 | 1 |
| 3 | --CHASSIS | | 1 |
| 4 | ---CONTACT ASSEMBLY | 41345 | 1 |
| 5 | ---BALL BEARING EL 4 | 206023 | 1 |
| 6 | --TRANSFER ARM HOUSING ASSY | 41465 | 1 |
| 7 | ---LOCKWASHER 5 | | 4 |
| 8 | ---SCREW AM 5X15 DIN 7985 | | 4 |
| 9 | ---HOUSING | 23078 | 1 |
| 10 | ---CABLE CLAMP | 22540 | 1 |
| 11 | ---LOCKWASHER 3 | | 2 |
| 12 | ---SCREW B 2,9X6,5 DIN 7981 | | 2 |
| 13 | ---SOCKET HOLDER | 23139 | 1 |
| 14 | --BALL BEARING | 206084 | 2 |
| 15 | --SHOULDER SCREW | 23147 | 2 |
| 16 | --BALL BEARING EL 6 ZZ | 206058 | 1 |
| 17 | --WASHER 6,2X12,2X0,5 | | 2 |
| 18 | --E-WASHER 5 DIN 6799 | | 1 |
| 19 | --MOTOR BRACKET | 22920 | 1 |
| 20 | --SCREW AM 5X15 DIN 7985 | | 2 |
| 21 | --SPRING WASHER A 5 DIN 137 | | 2 |
| 22 | --SPACER | 23269 | 2 |
| 23 | --GROMMET, REAR | 207348 | 1 |
| 24 | --ECCENTRIC LEVER | 29036 | 1 |
| 25 | --E-WASHER 4 DIN 6799 | | 1 |
| 26 | --SUPPORT | 41495 | 1 |
| 27 | --SCREW AM 4X8 DIN 7985 | | 2 |
| 28 | --LOCKWASHER 4 | | 2 |
| 29 | --TRIP SOLENOID | 223189 | 1 |
| 30 | --SCREW AM 3X8 DIN 7985 | | 2 |
| 31 | --LOCKWASHER 3 | | 2 |
| 32 | --CABLE CLAMP NR. 6100a | 229002 | 2 |
| 33 | --PICK UP BRACKET | 22848 | 1 |
| 34 | --BOLT M 4X8 DIN 933 | | 1 |
| 34L | CONTINUED 1 | | |

## Carriage chassis

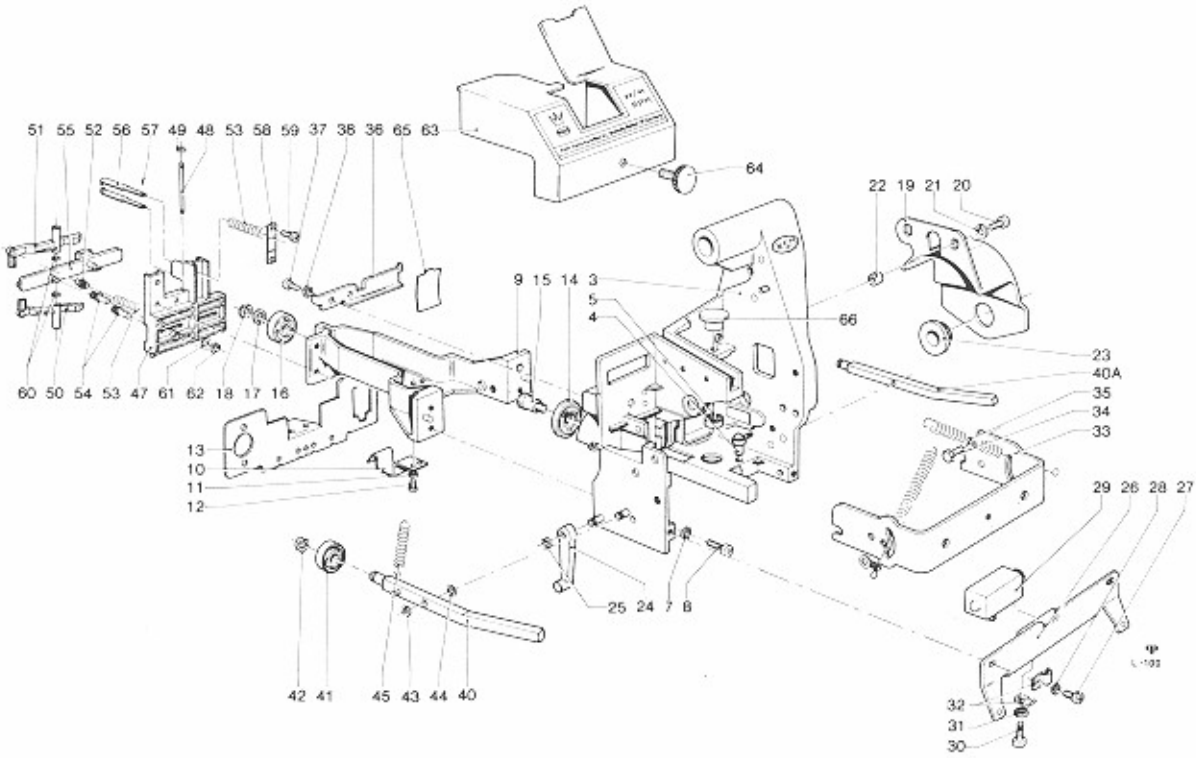


| POSITION | DESCRIPTION | PART NUMBER | QTY |
|---|---|---|---|
| 34M | CONTINUED 1 | | |
| 35 | --WASHER 4,3 DIN 125 | | 1 |
| 36 | --BRACKET | 23135 | 1 |
| 37 | --SCREW AM 4X8 DIN 7985 | | 2 |
| 38 | --LOCKWASHER 4 | | 2 |
| 39 | --LOCKING LEVER, LEFT ONLY | 10158 | 1 |
| 39A | --LOCKING LEVER, RIGHT ONLY | 10159 | 1 |
| 40 | ---LOCKING LEVER, LEFT STAMPED | 41493 | 1 |
| 40A | ---LOCKING LEVER, RIGHT STAMPED | 41494 | 1 |
| 41 | ---BALL BEARING EL 6 ZZ | 206058 | 2 |
| 42 | ---E-WASHER 5 DIN 6799 | | 2 |
| 43 | --E-WASHER 3,2 DIN 6799 | | 2 |
| 44 | --WASHER 4,3 DIN 433 | | 2 |
| 45 | --TENSION SPRING | 205333 | 2 |
| 46 | -READ OUT BLOCK ASSEMBLY | | 1 |
| 47 | --HOUSING | 202699 | 1 |
| 48 | --SHAFT | 23063 | 1 |
| 49 | --E-WASHER 1,9 DIN 6799 | | 2 |
| 50 | --SENSING LEVER, LOWER | 23266 | 1 |
| 51 | --SENSING LEVER, UPPER | 23267 | 1 |
| 52 | --READ-OUT CONTACTS | 201513 | 2 |
| 53 | --SPRING | 205324 | 4 |
| 54 | --CONTACT PIN | 201514 | 2 |
| 55 | --SHIFTING SLIDE | 41480 | 1 |
| 56 | --CONTACT PLUNGER | 201510 | 2 |
| 57 | --LOCKING PIN 1X4 DIN 1481 | | 2 |
| 58 | --CONTACT PLATE | 23059 | 1 |
| 59 | --SCREW AM 2,6X5 DIN 7985 | | 2 |
| 60 | --WASHER 2,5X5X0,4 | | 2 |
| 61 | --WASHER 3,2X6X0,2 | | 1 |
| 62 | --E-WASHER 2,3 DIN 6799 | | 1 |
| 63 | -COVER ASSEMBLY | 29030 | 1 |
| 64 | -SHOULDER SCREW M 3X6 DIN 465 | | 1 |
| 65 | -INSULATION | 201542 | 1 |
| 66 | -PLASTIC PLUG | 29013 | 1 |

## Carriage drive

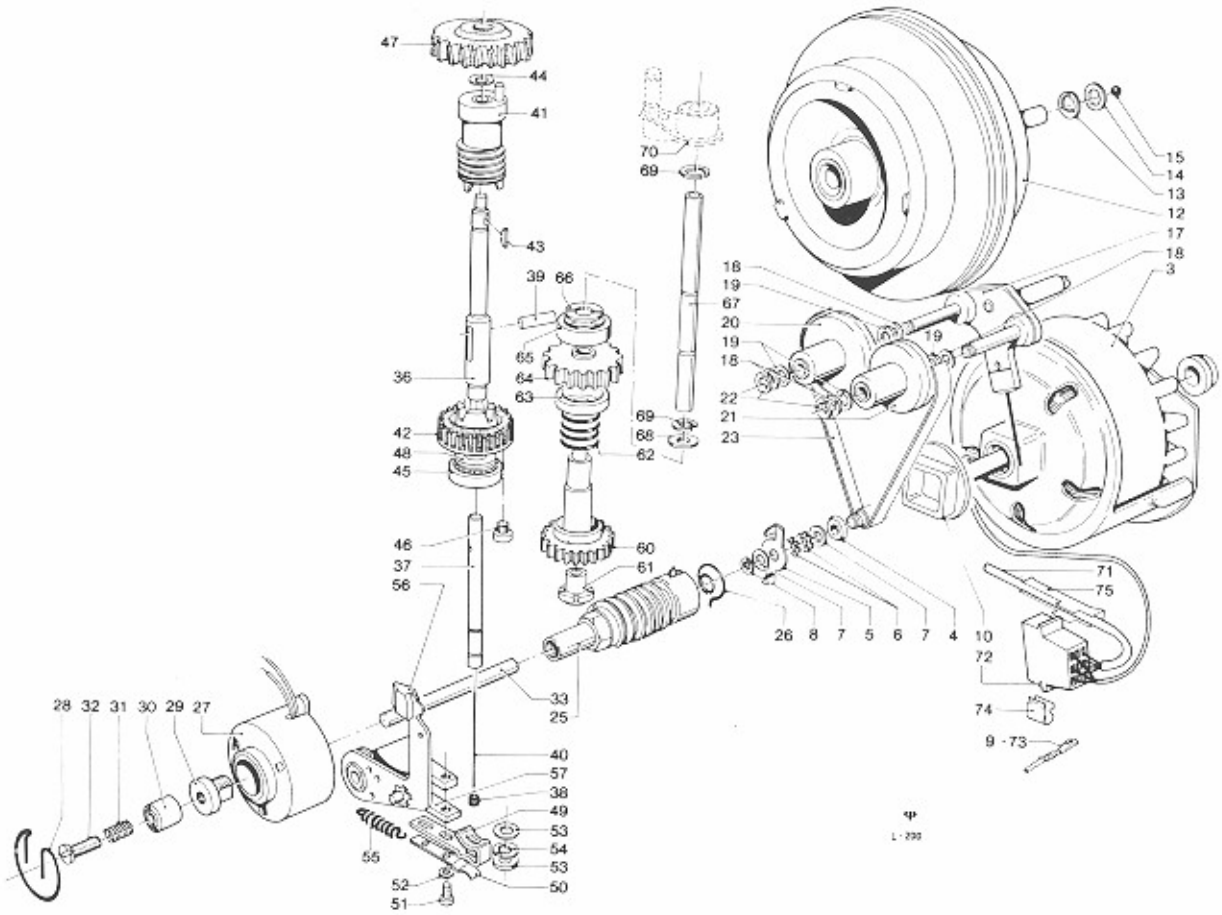


| POSITION | | DESCRIPTION | PART NUMBER | QTY |
|---|---|---|---|---|
| 1 | | CARRIAGE DRIVE | | 1 |
| 2 | | -CARRIAGE MOTOR ASSEMBLY | 41529 | 1 |
| | 3 | --CARRIAGE MOTOR, ONLY | 224093 | 1 |
| | 4 | --SEAL RING | 23018 | 1 |
| | 5 | --BUTTERFLY CLUTCH | 23043 | 1 |
| | 6 | --SPRING WASHER | 205119 | 2 |
| | 7 | --WASHER 9,5X5H7X0,4 | | 2 |
| | 8 | --E-WASHER 4 DIN 6799 | | 1 |
| | 9 | --AMP-LOK CONTACT NR. 42859-2 | 222205 | 3 |
| | 10 | -GROMMET FRONT | 207347 | 1 |
| 11 | | -TURNTABLE DRIVE | | 1 |
| | 12 | --TURNTABLE ASSEMBLY | 41504 | 1 |
| | 13 | --E-WASHER 7 DIN 6799 | | 1 |
| | 14 | --WASHER 8,3X12X0,2 | | 1 |
| | 15 | --STEEL BALL 4 Ø III DIN 5401 | | 1 |
| 16 | | --2 SPEED DRIVE ASSY 50 Hz | 41461 | 1 |
| | 17 | ---SHIFTING CROSS, ONLY 50 Hz | 41364 | 1 |
| | 18 | ---WASHER 6,1X10X0,1-0,4 | | AR |
| | 19 | ---WASHER | 29016 | 4 |
| | 20 | ---IDLER WHEEL, LARGE 50 Hz | 41343 | 1 |
| | 21 | ---IDLER WHEEL, SMALL 50 Hz | 41342 | 1 |
| | 22 | ---E-WASHER 3,2 DIN 6799 | | 2 |
| | 23 | --FLATBELT | 23360 | 1 |
| 24 | | -ELECTRICAL COUPLING | | 1 |
| | 25 | --WORM DRIVE ASSEMBLY | 41338 | 1 |
| | 26 | ---CONE PRESSURE SPRING | 205280 | 1 |
| 26L | | CONTINUED 1 | | |

## Carriage drive

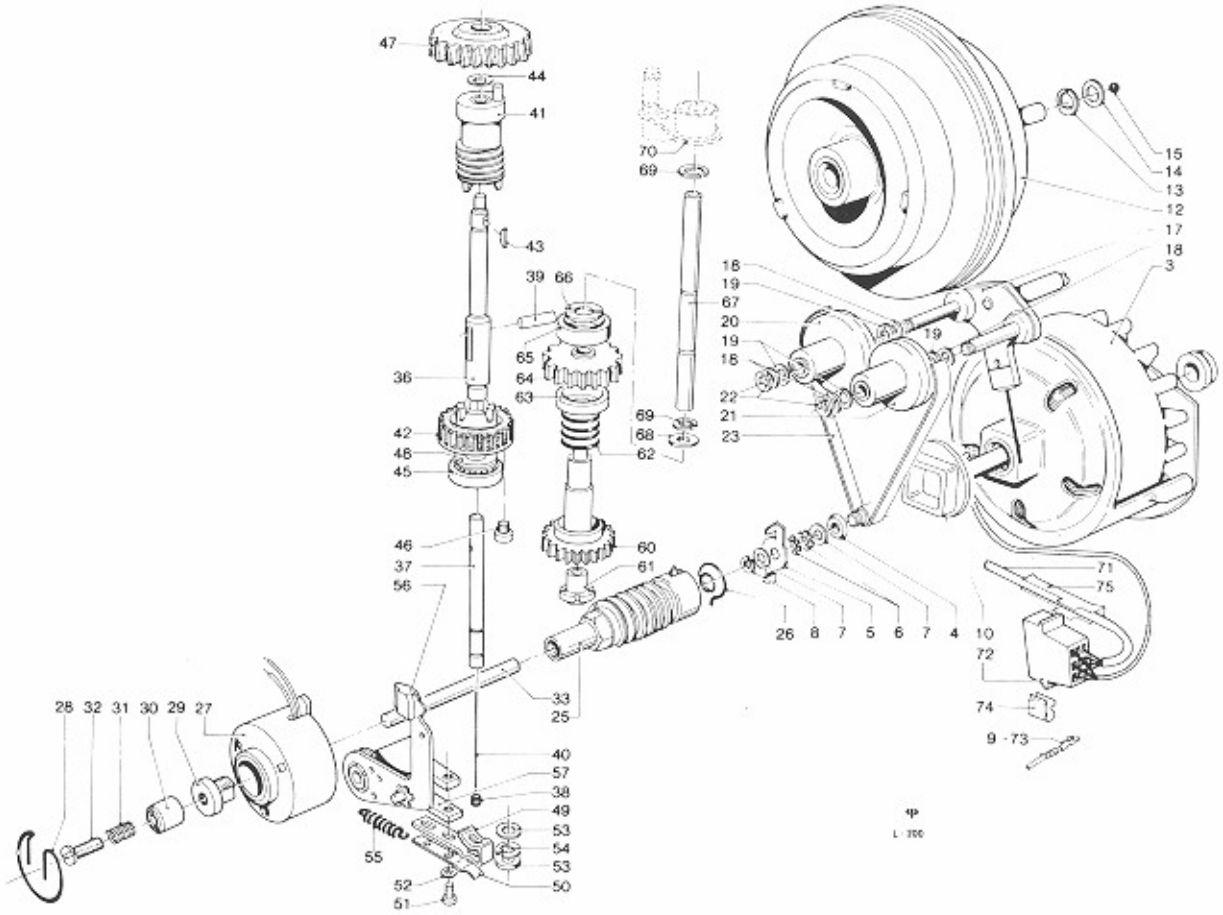


| POSITION | DESCRIPTION | PART NUMBER | QTY |
|---|---|---|---|
| 26M | CONTINUED 1 | | |
| 27 | --ELECTRICAL COUPLING SOLENOID (CLUTCH) ASSY | 41349 | 1 |
| 28 | --CLIP | 205302 | 1 |
| 29 | --CORE | 22137 | 1 |
| 30 | --ARMATURE | 41037 | 1 |
| 31 | ---PRESSURE SPRING | 205147 | 1 |
| 32 | ---SCREW AM 3X12 DIN 84 | | 1 |
| 33 | --COUPLING ROD | 201527 | 1 |
| 34 | -ALTERNATING CLUTCH (SCAN-TRANSFERPLAY) | | |
| 35 | --ALTERNATING CLUTCH ASSEMBLY | 10160 | 1 |
| 36 | ---CLUTCH SHAFT | 23141 | 1 |
| 37 | ---CLUTCH ROD | 22053 | 1 |
| 38 | ----LOCKING SCREW M 2,6X4 DIN 551 | | 1 |
| 39 | ---DRIVE PIN | 22054 | 1 |
| 40 | ---NEEDLE | 22055 | 1 |
| 41 | --WORMGEAR FOR ALTERNATING CLUTCH ASSY | 41503 | 1 |
| 42 | --CLUTCH GEAR | 29032 | 1 |
| 43 | --LOCKING SPRING 1,5X2,6 DIN 6888 | | 1 |
| 44 | --WASHER 6,2X10X0,05-0,2 | | AR |
| 45 | --BALL BEARING EL 6 ZZ | 206058 | 1 |
| 46 | --SCREW AM 3X6 DIN 7985 | | 2 |
| 47 | --COUPLING GEAR | 22914 | 1 |
| 48 | --WASHER 6,2X9X0,3 | | 1 |
| 49 | --CLUTCH ARM | 22138 | 1 |
| 50 | --CLUTCH SPRING FLAT | 205144 | 1 |
| 51 | --SCREW AM 3X8 DIN 7985 | | 2 |
| 51L | CONTINUED 2 | | |

# SPARE PARTS LIST

## Carriage drive

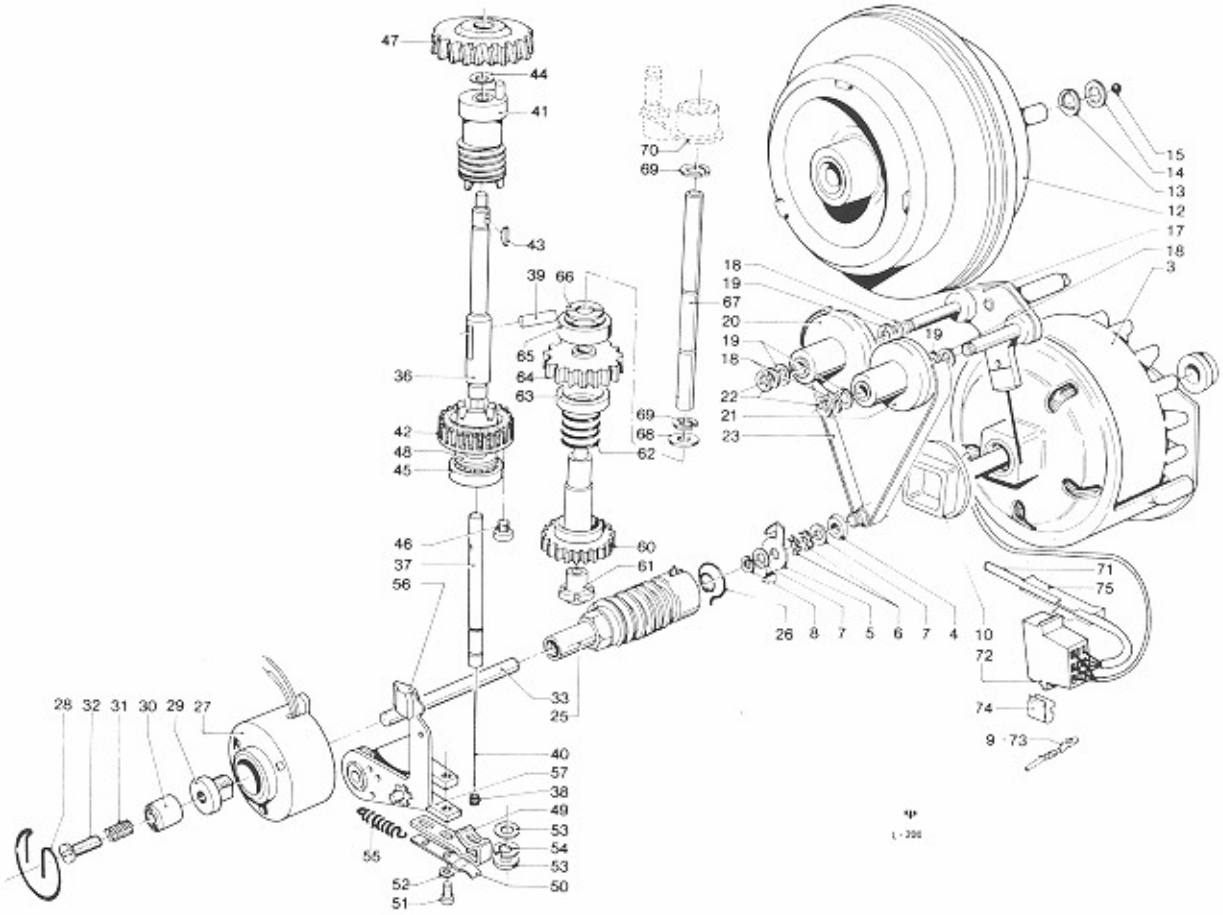


| POSITION | DESCRIPTION | PART NUMBER | QTY |
|---|---|---|---|
| 51M | CONTINUED 2 | | |
| 52 | --WASHER 3,2X5,4X0,3 | | 2 |
| 53 | --WASHER 4,2X6,5X0,5 | | 2 |
| 54 | --E-WASHER 3,2 DIN 6799 | | 1 |
| 55 | --TENSION SPRING | 205149 | 1 |
| 56 | --LOCKING PAWL ASSEMBLY | 41464 | 1 |
| 57 | --SPACER 0,5mm | 22490 | AR |
| 57A | --SPACER 1,0mm | 22491 | AR |
| 57B | --SPACER 2,0mm | 22152 | AR |
| 58 | -SCAN ASSEMBLY | | 1 |
| 59 | --SLIP CLUTCH ASSEMBLY | 41555 | 1 |
| 60 | ---SCAN GEAR | 202690 | 1 |
| 61 | ---HUB | 202694 | 1 |
| 62 | ---PRESSURE SPRING | 205306 | 1 |
| 63 | ---FRICTION DISC, LOWER | 202691 | 1 |
| 64 | ---DRIVE GEAR | 23313 | 1 |
| 65 | ---FRICTION DISC, UPPER | 202692 | 1 |
| 66 | ---SAFETY SEGMENT | 23176 | 2 |
| 67 | --SHAFT | 23062 | 1 |
| 68 | --WASHER 5,1X11,8X0,3 | | 2 |
| 69 | --E-WASHER 4 DIN 6799 | | 2 |
| 70 | --LATCHING LEVER SEE PAGE L 300 | | |
| 71 | -HARNESS-CARRIAGE | 41507 | 1 |
| 72 | --AMP-PLUG 9 PRONG | 225105 | 1 |
| 73 | --AMP-LOK CONTACT NR. 42859-2 | 222205 | 4 |
| 74 | --CLAMP TYP SCO 5069 | 205276 | 1 |
| 75 | -CABLE CHANNEL | 23177 | 1 |

# SPARE PARTS LIST

## Transfer and tonearm drive

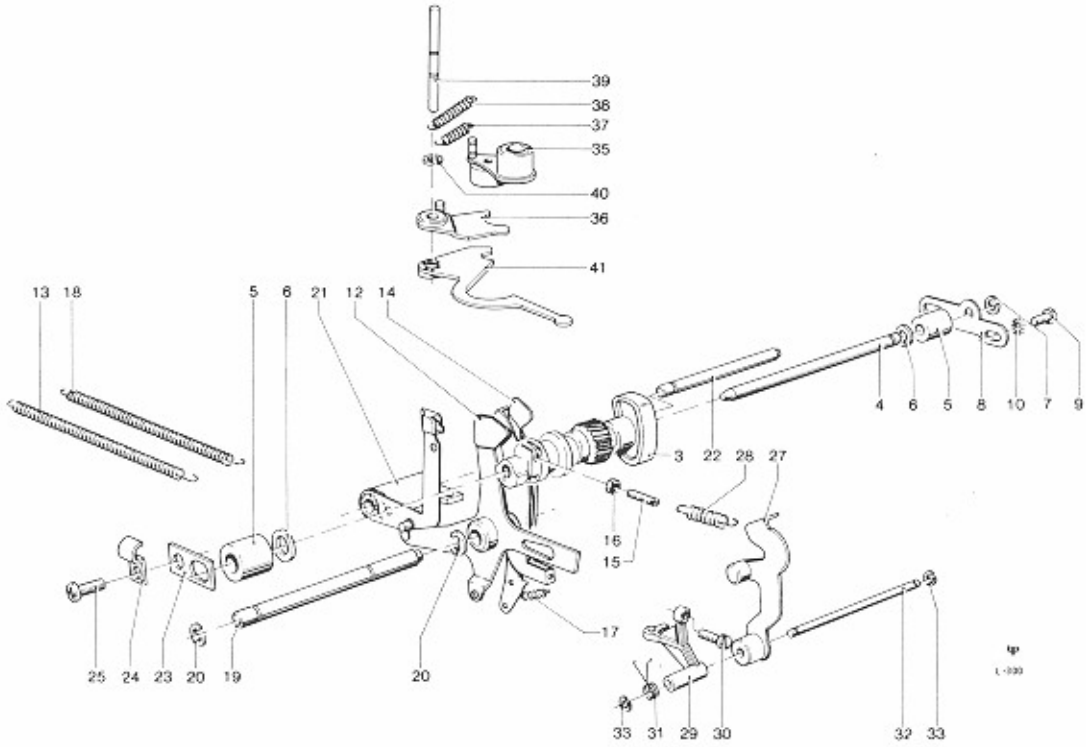


| POSITION | DESCRIPTION | PART NUMBER | QTY |
|---|---|---|---|
| 1 | TRANSFER AND TONEARM DRIVE | | 1 |
| 2 | -CAMSHAFT | | 1 |
| 3 | --CAMSHAFT ASSY | 41337 | 1 |
| 4 | --SHAFT | 22908 | 1 |
| 5 | --SPACER | 22146 | 2 |
| 6 | --WASHER 5,2X10X0,05-0,2 | | AR |
| 7 | --E-WASHER 4 DIN 6799 | | 1 |
| 8 | --ADJUSTING PLATE | 22768 | 1 |
| 9 | --SCREW AM 4X6 DIN 7985 | | 2 |
| 10 | --LOCKWASHER 4 | | 2 |
| 11 | -SEARCH AND LOCKING ASSEMBLY | | 1 |
| 12 | --TRIP LEVER ASSEMBLY | 41487 | 1 |
| 13 | --TENSION SPRING | 205148 | 1 |
| 14 | --LOCKING LEVER ASSEMBLY | 41031 | 1 |
| 15 | ---LOCKING SCREW M 2,6X0,35X10 DIN 551 | | 1 |
| 16 | ---NUT BM 2,6X0,35 DIN 439 | | 1 |
| 17 | --PRESSURE SPRING | 205156 | 1 |
| 18 | --TENSION SPRING | 205150 | 1 |
| 19 | --SHAFT | 23130 | 1 |
| 20 | --E-WASHER 4 DIN 6799 | | 2 |
| 21 | --LOCKING PAWL ASSEMBLY SEE PAGE L 200 | | 1 |
| 22 | --SHAFT | 23145 | 1 |
| 23 | --SHAFT SAFETY | 22132 | 1 |
| 24 | --CABLE CLAMP 3 NR. 6100a | 229002 | 1 |
| 25 | --SCREW AM 3X5 DIN 7985 | | 1 |
| 25L | CONTINUED 1 | | |

## Transfer and tonearm drive

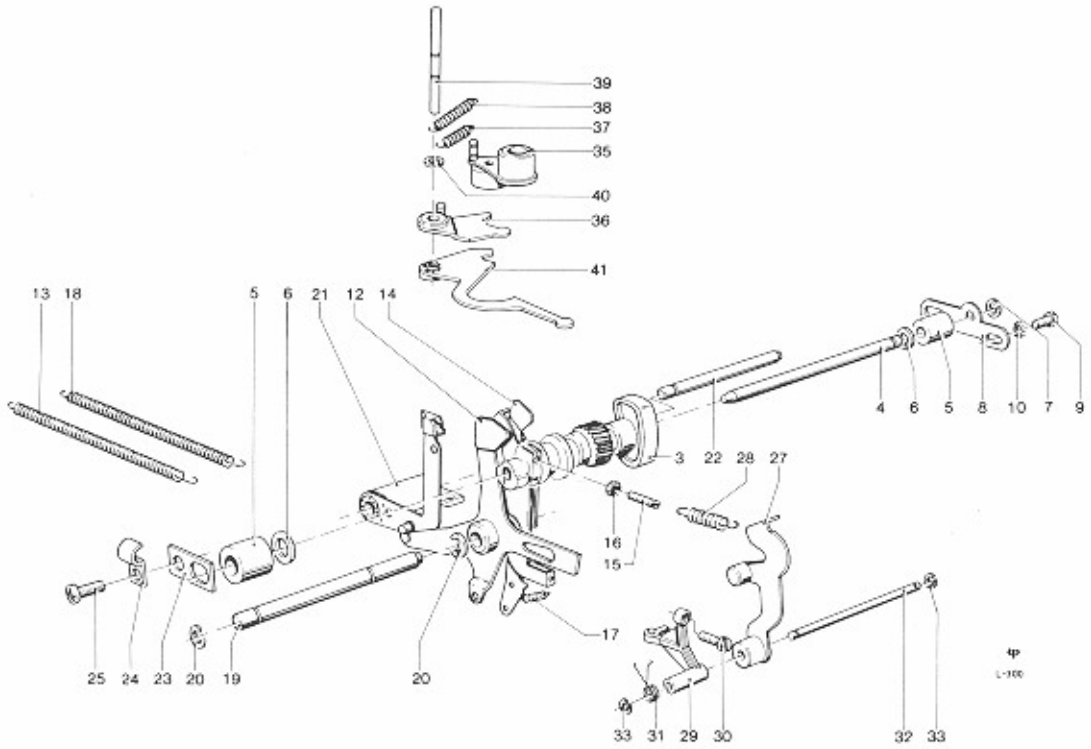


| POSITION | DESCRIPTION | PART NUMBER | QTY | |
|---|---|---|---|---|
| 25M | CONTINUED 1 | | | |
| 26 | -TRANSFER ASSEMBLY | | 1 | |
| 27 | --SPEED CONTROL LEVER ASSEMBLY | 41341 | 1 | |
| 28 | ---TENSION SPRING | 205238 | 1 | |
| 29 | --CONTACT LEVER (OPERATING SWITCH) ASSEMBLY | 41346 | 1 | |
| 30 | --SCREW | 22896 | 1 | |
| 31 | --TORSION SPRING | 205305 | 1 | |
| 32 | --SHAFT | 22895 | 1 | |
| 33 | --E-WASHER 4 DIN 6799 | | 2 | |
| 34 | -TONEARM DRIVE | | 1 | |
| 35 | --LATCHING LEVER ASSEMBLY | 41483 | 1 | |
| 36 | --CRADLE ACTUATOR ASSEMBLY | 41500 | 1 | |
| 37 | --TENSION SPRING | 205234 | 1 | |
| 38 | --TENSION SPRING | 205235 | 1 | |
| 39 | --SHAFT | 22136 | 1 | |
| 40 | --E-WASHER 2,3 DIN 6799 | | 2 | |
| 41 | --PICK UP SHIFTING LEVER | 41015 | 1 | |

# SPARE PARTS LIST

## Record drive and tonearm

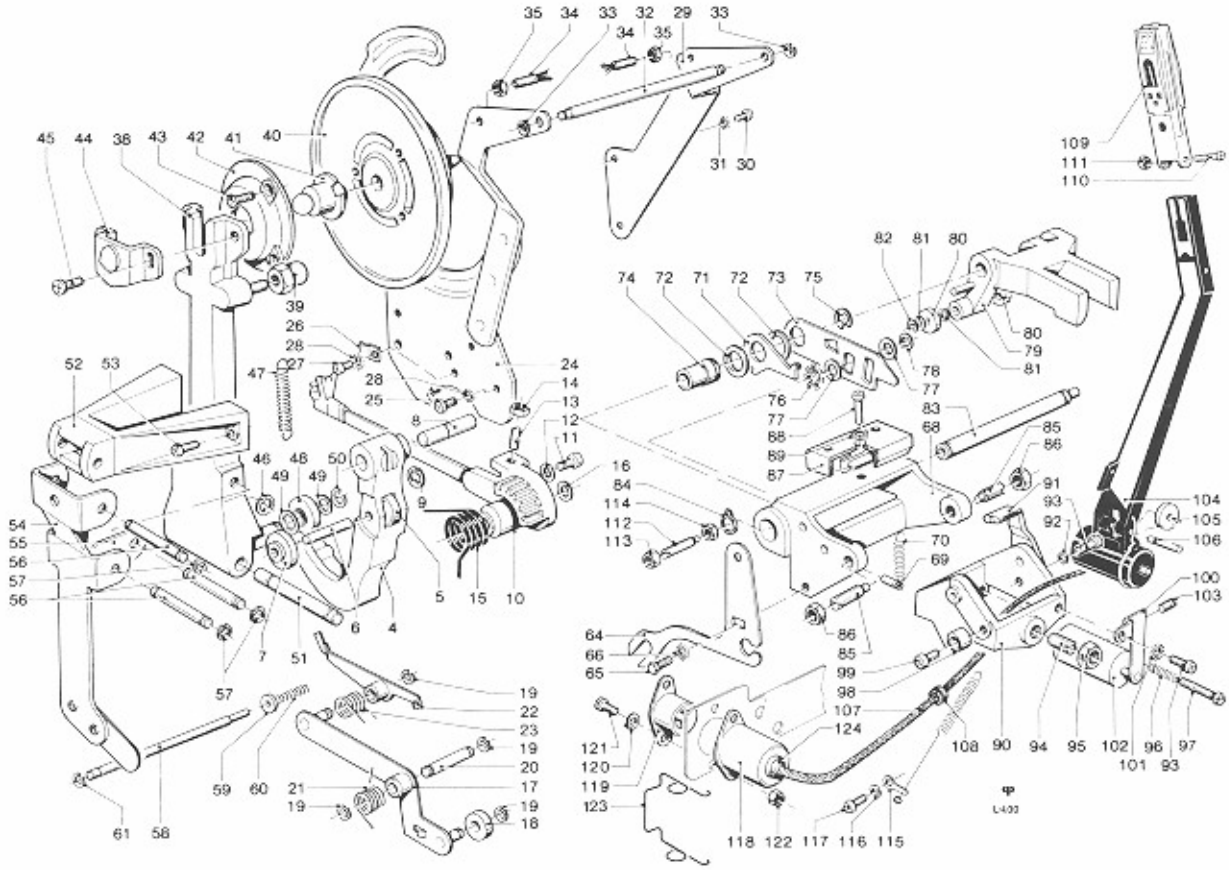

| POSITION | DESCRIPTION | PART NUMBER | QTY |
|---|---|---|---|
| 1 | RECORD DRIVE AND TONEARM | | |
| 2 | -RECORD DRIVE | | 1 |
| 3 | --GEARSEGMENT ASSEMBLY | 41463 | 1 |
| 4 | ---GEARSEGMENT | 23073 | 1 |
| 5 | ---ROLLER ASSEMBLY | 41354 | 1 |
| 6 | ---SHAFT | 22874 | 1 |
| 7 | --ROLLER ASSEMBLY | 41356 | 1 |
| 8 | --SHAFT | 22133 | 1 |
| 9 | ---E-WASHER 4 DIN 6799 | | 1 |
| 10 | --RECORD TRANSFER ARM ASSEMBLY | 41532 | 1 |
| 11 | ---SCREW AM 3X5 DIN 7985 | | 1 |
| 12 | ---WASHER 3,2 DIN 125 | | 1 |
| 13 | ---LOCKING SCREW M 4X10 DIN 551 | | 1 |
| 14 | ---NUT BM 4 DIN 439 | | 1 |
| 15 | --TORSION SPRING | 205325 | 1 |
| 16 | --WASHER 5,2X10X0,1-0,4 | | AR |
| 17 | --COUPLING LEVER ASSEMBLY | 41502 | 1 |
| 18 | --ROLLER | 23261 | 1 |
| 19 | --E-WASHER 2,3 DIN 6799 | | 4 |
| 20 | --SHAFT | 23058 | 1 |
| 21 | --TORSION SPRING | 205332 | 1 |
| 22 | --ADVANCE LEVER ASSEMBLY | 41501 | 1 |
| 23 | --TORSION SPRING | 205326 | 1 |
| 24 | --GUIDE PLATE ASSEMBLY | 41477 | 1 |
| 25 | ---SCREW AM 3X5 DIN 7985 | | 2 |
| 26 | ---CABLE CLAMP 3 NR. 6100a | 229002 | 1 |
| 27 | ---SCREW AM 3X6 DIN 7985 | | 1 |
| 28 | ---LOCKWASHER 3 | | 3 |
| 29 | --SUPPORT BRACKET | 23091 | 1 |
| 30 | ---SCREW AM 4X8 DIN 7985 | | 2 |
| 31 | ---LOCKWASHER 4 | | 2 |
| 32 | --SHAFT | 23092 | 1 |
| 33 | ---E-WASHER 3,2 DIN 6799 | | 2 |
| 34 | --BRUSH ASSEMBLY | 202427 | 2 |
| 35 | ---NUT BM 4 DIN 439 | | 2 |
| 35L | CONTINUED 1 | | |

# SPARE PARTS LIST

## Record drive and tonearm

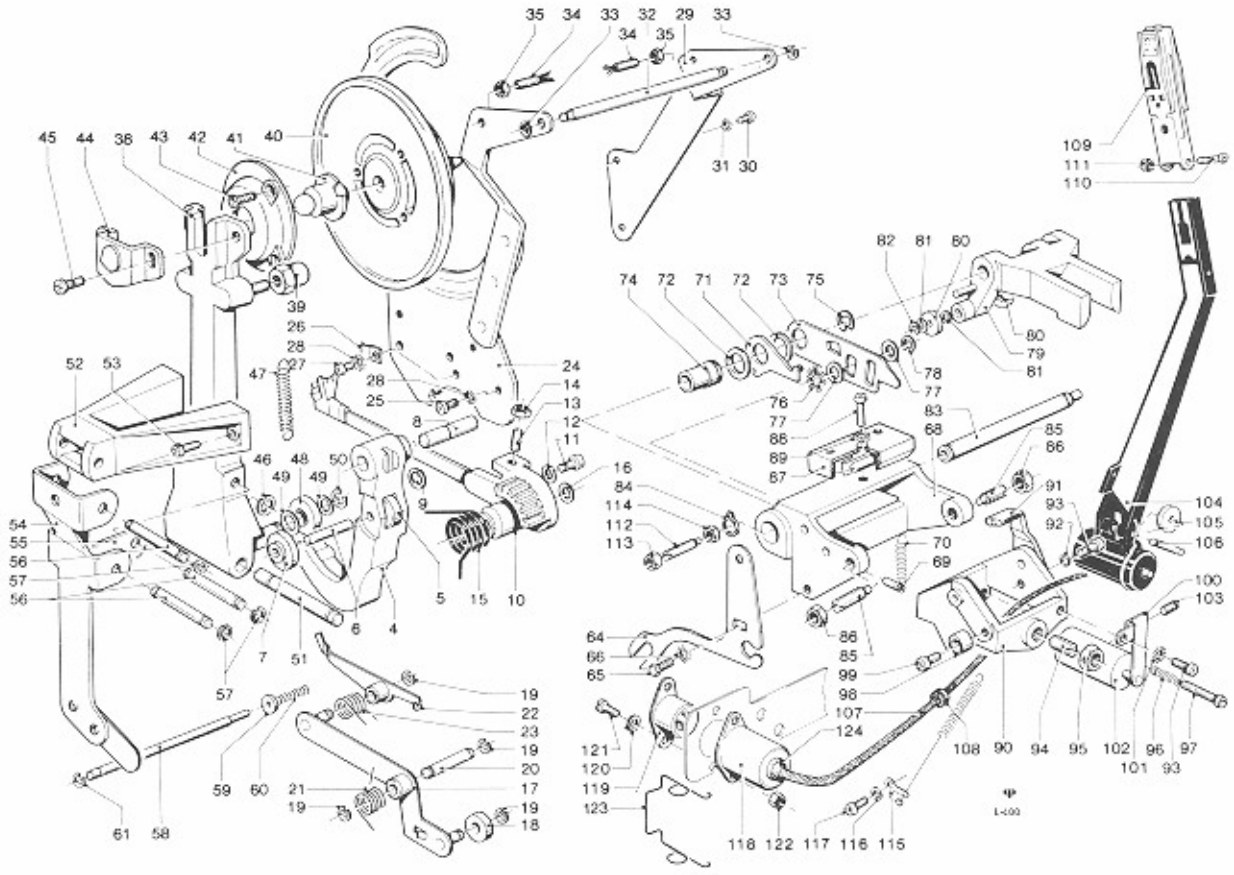

| POSITION | DESCRIPTION | PART NUMBER | QTY | |
|---|---|---|---|---|
| 35M | CONTINUED 1 | | | |
| 36 | -RECORD CLAMP ASSEMBLY | | 1 | |
| 37 | --RECORD CLAMP | | 1 | |
| 38 | ---CLAMP ARM ASSEMBLY | 41355 | 1 | |
| 39 | ---ADJUSTING NUT | 29025 | 2 | |
| 40 | ---CLAMP DISC | 29022 | 1 | |
| 41 | ---JOINT | 41357 | 1 | |
| 42 | ---FLANGE | 29023 | 1 | |
| 43 | ---SCREW BZ 2,9X6,5 DIN 7983 | | 3 | |
| 44 | ---PIVOT BLOCK | 29024 | 1 | |
| 45 | ----SCREW AM 4X8 DIN 7985 | | 2 | |
| 46 | ---E-WASHER 3,2 DIN 6799 | | 1 | |
| 47 | ---TENSION SPRING | 205304 | 1 | |
| 48 | ---ROLLER ASSEMBLY | 41354 | 1 | |
| 49 | ----WASHER 7,5X4,2X0,1 | | 2 | |
| 50 | ----E-WASHER 3,2 DIN 6799 | | 1 | |
| 51 | ---SHAFT | 22890 | 1 | |
| 52 | ---SUPPORT FOR CLAMP ARM | 22900 | 1 | |
| 53 | ----SCREW AM 3X6 DIN 7985 | | 2 | |
| 54 | ---SPEED CONTROL ACTUATOR ASSY | 41340 | 1 | |
| 55 | ---INTERMEDIATE LEVER | 22846 | 1 | |
| 56 | ---SHAFT | 22879 | 3 | |
| 57 | ----E-WASHER 2,3 DIN 6799 | | 6 | |
| 58 | ---SHIFTING ROD | 22893 | 1 | |
| 59 | ----RING | 22894 | 1 | |
| 60 | ----PRESSURE SPRING | 205303 | 1 | |
| 61 | ----E-WASHER 4 DIN 6799 | | 1 | |
| 62 | -TONE ARM ASSEMBLY | | 1 | |
| 63 | --CRADLE ASSEMBLY | 10161 | 1 | |
| 64 | ---CRADLE GUIDE | 23039 | 1 | |
| 65 | ----SCREW M 4X6 DIN 933 | | 1 | |
| 65L | CONTINUED 2 | | | |

# SPARE PARTS LIST

## Record drive and tonearm

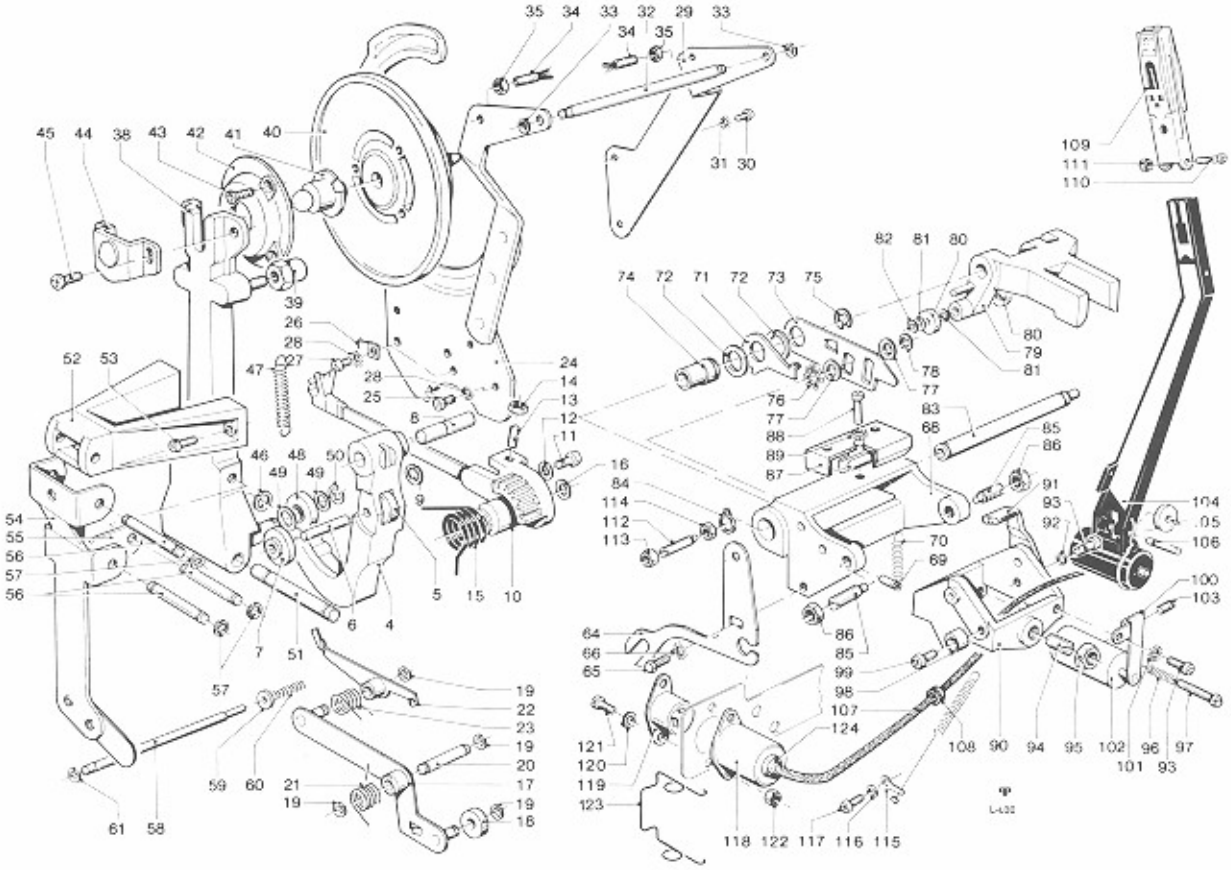

| POSITION | DESCRIPTION | PART NUMBER | QTY |
|---|---|---|---|
| 65M | CONTINUED 2 | | |
| 66 | ----LOCKWASHER 4 | | 1 |
| 67 | ---CRADLE BLOCK ASSEMBLY | 41481 | 1 |
| 68 | ----CRADLE BLOCK | | 1 |
| 69 | ----PIN 3X8 | | 1 |
| 70 | ----TENSION SPRING | 205313 | 1 |
| 71 | ----RESET LEVER ACTUATOR | 22929 | 1 |
| 72 | ----WASHER 8,3X12X0,1 | | 2 |
| 73 | ----RESET LEVER | 22930 | 1 |
| 74 | ----SLEEVE | 22927 | 1 |
| 75 | ----E-WASHER 7 DIN 6799 | | 1 |
| 76 | ----SPRING WASHER | 205119 | 1 |
| 77 | ----WASHER 14X5,3X0,4 | | 2 |
| 78 | ----E-WASHER 4 DIN 6799 | | 1 |
| 79 | ---RELEASE FORK ASSEMBLY | 41368 | 1 |
| 80 | ----ROLLER | 22122 | 2 |
| 81 | ----WASHER 3,2X7X0,1 | | AR |
| 82 | ----E-WASHER 4 DIN 6799 | | 2 |
| 83 | ---SHAFT | 22098 | 1 |
| 84 | ---CLIP RING 4,8 SP 220 | | 2 |
| 85 | ---LOCKING SCREW | 22099 | 2 |
| 86 | ---NUT BM 5 DIN 439 | | 2 |
| 87 | ---REED SWITCH HOLDER ASSEMBLY | 41369 | 1 |
| 88 | ---SCREW AM 3X6 DIN 7985 | | 1 |
| 89 | ---LOCKWASHER 3 | | 1 |
| 90 | ---PICK-UP PIVOT BLOCK ASSEMBLY | 41367 | 1 |
| 91 | ----MAGNET HOLDER ASSEMBLY | 41810 | 1 |
| | MAGNET | 201474 | 1 |
| 92 | ----WASHER 3,2 DIN 125 | | 1 |
| 93 | ----SCREW M 3X7 DIN 7985 | | 2 |
| 94 | ----LOCKING SCREW | 22101 | 1 |
| 94L | CONTINUED 3 | | |

# SPARE PARTS LIST

## Record drive and tonearm

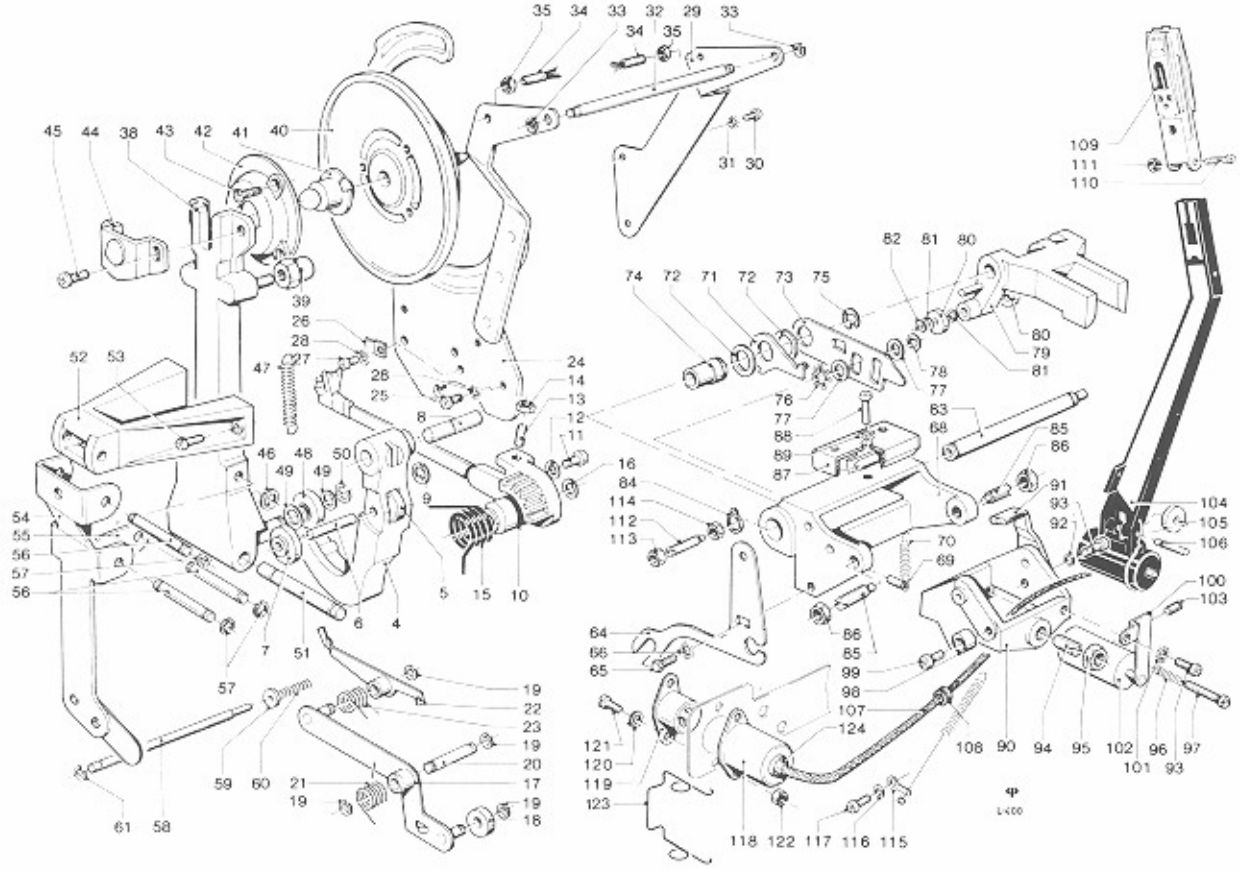

| POSITION | DESCRIPTION | PART NUMBER | QTY |
|---|---|---|---|
| 94M | CONTINUED 3 | | |
| 95 | ----NUT BM 5 DIN 439 | | 1 |
| 96 | ----PRESSURE SPRING | 205147 | 1 |
| 97 | ----SCREW AM 3X16 DIN 7985 | | 1 |
| 98 | ----ECCENTRIC WASHER | 29037 | 1 |
| 99 | ----SCREW AM 3X6 DIN 7985 | | 1 |
| 100 | ----COUNTERWEIGHT HOLDER ASSEMBLY | 41020 | 1 |
| 101 | ----LOCKWASHER 3 | | 1 |
| 102 | ----COUNTERWEIGHT | 22103 | 1 |
| 103 | ----LOCKING SCREW M 3X6 DIN 417 | | 1 |
| 104 | ---TONE ARM ASSEMBLY | 41528 | 1 |
| 105 | ----ROLLER | 22031 | 1 |
| 106 | ----PIN | 22032 | 1 |
| 107 | ----TONE ARM CABLE TYP 319a Y (c) Y | 227340 | 1 |
| 108 | ----GROMMET | 207446 | 1 |
| 109 | ----CARTRIDGE STEREO WITH DIAMONDS | 224074 | 1 |
| 110 | ----SCREW CM 1,7X13 DIN 85 | | 1 |
| 111 | ----NUT BM 1,7 DIN 439 | | 1 |
| 112 | --LOCKING SCREW | 22892 | 1 |
| 113 | --NUT M 6 DIN 934 | | 1 |
| 114 | --NUT BM 6 DIN 439 | | 1 |
| 115 | --TONE ARM SPRING ASSEMBLY | 41505 | 2 |
| 116 | --WASHER 3,2 DIN 433 | | 2 |
| 117 | --SCREW AM 3X4 DIN 7985 | | 2 |
| 118 | --SHIELDING CAP | 22147 | 1 |
| 119 | --3 PRONG SOCKET MAB 3 S | 225030 | 1 |
| 120 | --LUG | 229018 | 2 |
| 121 | --SCREW AM 2,6X6 DIN 7985 | | 2 |
| 122 | --NUT BM 2,6 DIN 439 | | 2 |
| 123 | --SAFETY SPRING | 205203 | 1 |
| 124 | --GROMMET D 4 | 207511 | 1 |

# SPARE PARTS LIST

## Coin mechanism

| POSITION | DESCRIPTION | PART NUMBER | QTY |
|---|---|---|---|
| 1 | COIN MECHANISM | | |
| 2 | -COIN REJECTOR | 207237 | 1 |
| 3 | -HOUSING ASSEMBLY | 41689 | 1 |
| 4 | --ADD. BUTTON | 222089 | 1 |
| 5 | --SUBTR. BUTTON | 222089 | 1 |
| 6 | -CAPACITOR 0,022 MF | 220046 | 3 |
| 7 | -COIN SWITCH | 222100 | 1 |
| 8 | -SWITCH LEVER | 45047 | 1 |
| 9 | -COIN CHANNEL WITH COIN SWITCHES | 10164 | 1 |
| 10 | -COIN RETURN CUP | 41306 | 1 |
| 11 | PLUNGER ASSEMBLY SEE PAGE B 100 | | |

# SPARE PARTS LIST

## Volume control

for Mono and Stereo

Volume Control R1 Order # 41479

One control and one reject button

for Stereo

Volume Control R2 Order # 41527

Each channel controlled separately and one reject button

# SPARE PARTS LIST

## Control Centre 220/50

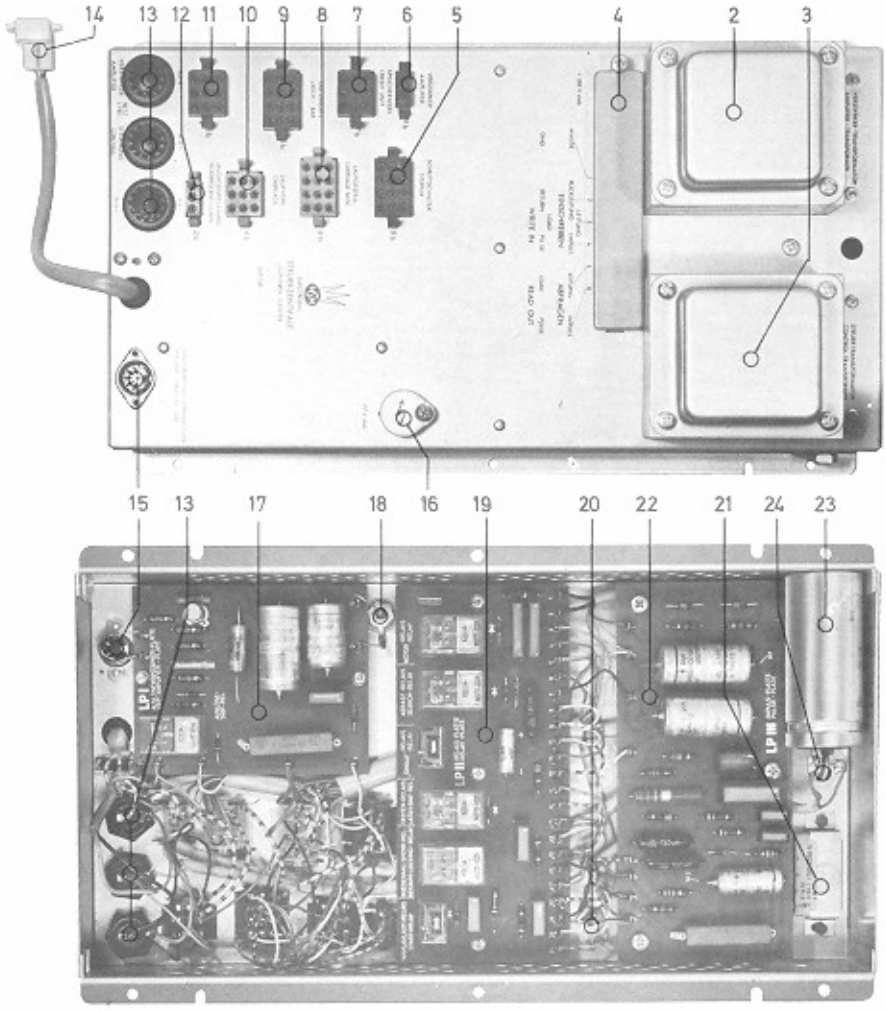


| POSITION | DESCRIPTION | | PART NUMBER | QTY |
|---|---|---|---|---|
| 1 | CONTROL CENTRE ASSEMBLY | | 41575 | 1 |
| 2 | -AMPLIFIER TRANSFORMER WITH COVER | | 223194 | 1 |
| 3 | -CONTROL TRANSFORMER WITH COVER | | 223193 | 1 |
| 4 | -SAFETY COVER | | 29119 | 1 |
| 5 | -AMP SOCKET 12 PRONG BLUE | | 23085 | 1 |
| 6 | -AMP SOCKET 3 PRONG BLUE | | 23034 | 1 |
| 7 | -AMP SOCKET 9 PRONG BLUE | | 23087 | 1 |
| 8 | -AMP SOCKET 12 PRONG WHITE | | 225182 | 1 |
| 9 | -AMP SOCKET 12 PRONG RED | | 22745 | 1 |
| 10 | -AMP SOCKET 9 PRONG WHITE | | 225180 | 1 |
| 11 | -AMP SOCKET 9 PRONG RED | | 23086 | 1 |
| 12 | -AMP SOCKET 3 PRONG WHITE | | 225174 | 1 |
| 13 | -FUSEHOLDER COMPLETE | | 225138 | 3 |
| | FUSE 2 AMP SLO BLO | | 225020 | 1 |
| | FUSE 0,6 AMP SLO BLO | | 225115 | 1 |
| | FUSE 1,6 AMP SLO BLO | | 225195 | 1 |
| 14 | -AMP PLUG 6 PRONG WHITE | | 225176 | 1 |
| 15 | -METAL SOCKET 3 PRONG | | 225030 | 1 |
| 16 | -SAFETY COVER | | 29039 | 1 |
| 17 | -TRIP AMPLIFIER PLATE ASSY LP I | SEE PAGE S 100 | | |
| 18 | -ZENERDIODE ZL 27 | | 227117 | 1 |
| 19 | -RELAY PLATE ASSY LP II | SEE PAGE S 200 | | |
| 20 | -ZENERDIODE ZL 150 | | 221118 | 1 |
| 21 | -RECTIFIER WITH CLAMP | | 221122 | 2 |
| 22 | -PULSE PLATE ASSY LP III | SEE PAGE S 300 | | |
| 23 | -MOTOR CAPACITOR 10 MF/150 V | | 220131 | 1 |
| 24 | -VARISTOR E 299 DD/P344 S | | 221103 | 2 |

# SPARE PARTS LIST

**Control Centre 220/50**

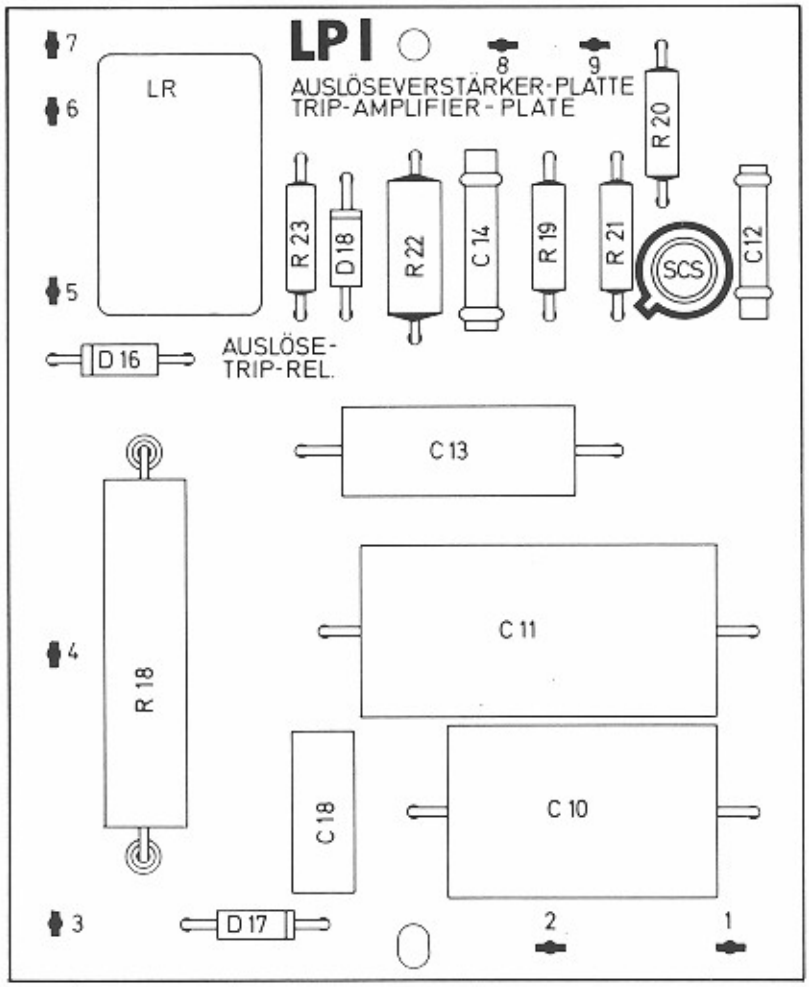


| POSITION | DESCRIPTION | PART NUMBER | QTY |
|---|---|---|---|
| | TRIP AMPLIFIER PLATE, LP I, ASSEMBLED | 41474 | 1 |
| | -TRIP AMPLIFIER PLATE, WITHOUT PARTS | 207385 | 1 |
| LR | --TRIP RELAY 2 HIGH VOLTAGE CONTACTS | 223182 | 1 |
| SCS | --SILICONE CONTROLLED SWITCH BRY 20 | 221121 | 1 |
| | HEATSINK WASHER | 202760 | 1 |
| R18 | --WIRE WOUND RESISTOR, CHINA 100 OHM | 221139 | 1 |
| | CERAMIC SPACER | 221123 | 2 |
| R19 | --CARBON RESISTOR 150 OHM | 221147 | 1 |
| R20 | --CARBON RESISTOR (WITH BRY 20 WHITE) 220 OHM | 221137 | AR |
| | CARBON RESISTOR (WITH BRY 20 YELLOW) 180 OHM | 221101 | AR |
| | CARBON RESISTOR (WITH BRY 20 GREEN) 150 OHM | 221147 | AR |
| | CARBON RESISTOR (WITH BRY 20 RED) 120 OHM | 221150 | AR |
| R21 | --CARBON RESISTOR 150 OHM | 221147 | 1 |
| R22 | --CARBON RESISTOR 1 K OHM | 221136 | 1 |
| R23 | --CARBON RESISTOR 100 OHM | 221134 | 1 |
| C10 | --LYTIC 250 MF 70/80 V | 220065 | 1 |
| C11 | --LYTIC 1000 MF 35/40 V | 220107 | 1 |
| C12 | --CERAMIC 4,7 nF | 220129 | 1 |
| C13 | --LYTIC 100 MF 35/40 V | 220105 | 1 |
| C14 | --CERAMIC 6,8 nF | 220128 | 1 |
| C18 | --MYLAR 0,22 MF 250 V | 220077 | 1 |
| D16 | --SILICONE DIODE 400 V 1N 4004 | 221115 | 1 |
| D17 | --SILICONE DIODE 400 V 1N 4004 | 221115 | 1 |
| D18 | --SILICONE DIODE 400 V 1N 4004 | 221115 | 1 |

# SPARE PARTS LIST

## Control Centre 220/50

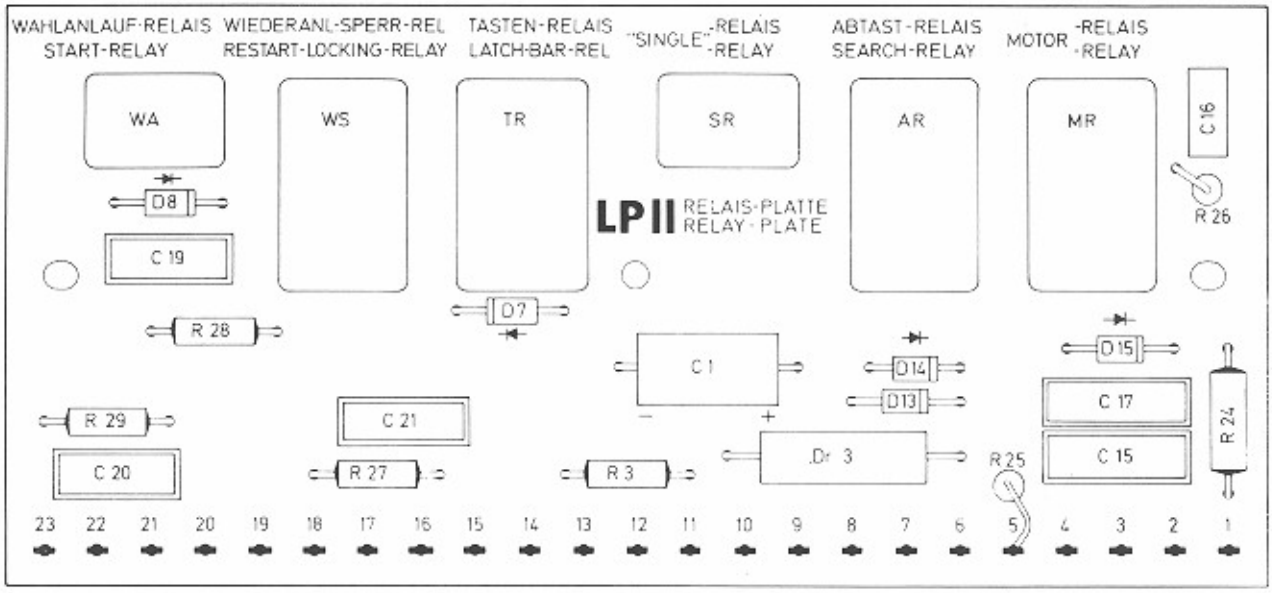


| POSITION | DESCRIPTION | PART NUMBER | QTY |
|---|---|---|---|
| | RELAY PLATE, LP II, ASSEMBLED | 41473 | 1 |
| | -RELAY PLATE, WITHOUT PARTS | 207384 | 1 |
| WA | --START RELAY 1 HIGH VOLTAGE CONTACT | 223183 | 1 |
| WS | --RESTART LOCKING RELAY 4 LOW VOLTAGE CONTACTS | 223180 | 1 |
| TR | --LATCH BAR RELAY 2 HIGH VOLTAGE CONTACTS | 223182 | 1 |
| SR | --SINGLE RELAY 1 HIGH VOLTAGE CONTACT | 223183 | 1 |
| AR | --SEARCH RELAY 2 HIGH VOLTAGE CONTACTS | 223182 | 1 |
| MR | --MOTOR RELAY 2 HIGH VOLTAGE CONTACTS | 223182 | 1 |
| R3 | --RESISTOR 33 OHM | 221133 | 1 |
| R24 | --RESISTOR 1 K OHM | 221136 | 1 |
| R25 | --RESISTOR 33 OHM | 221133 | 1 |
| R26 | --RESISTOR 270 OHM | 221096 | 1 |
| R27 | --RESISTOR 47 OHM | 221129 | 1 |
| R28 | --RESISTOR 47 OHM | 221129 | 1 |
| R29 | --RESISTOR 47 OHM | 221129 | 1 |
| C1 | --LYTIC 50 MF 35/40 V | 220103 | 1 |
| C15 | --MYLAR 0,22 MF 250 V | 220127 | 1 |
| C16 | --MYLAR 0,022 MF 630 V | 220122 | 1 |
| C17 | --MYLAR 0,022 MF 400 V | 220127 | 1 |
| C19 | --MYLAR 0,22 MF 250 V | 220077 | 1 |
| C20 | --MYLAR 0,22 MF 250 V | 220077 | 1 |
| C21 | --MYLAR 0,22 MF 250 V | 220077 | 1 |
| DR3 | --INDUCTOR 130 MH | 221146 | 1 |
| D7 | --SILICONE DIODE 400 V | 221115 | 1 |
| D8 | --SILICONE DIODE 400 V | 221115 | 1 |
| D13 | --SILICONE DIODE 600 V | 221119 | 1 |
| D14 | --SILICONE DIODE 400 V | 221115 | 1 |
| D15 | --SILICONE DIODE 400 V | 221115 | 1 |

# SPARE PARTS LIST

**Control Centre 220/50**

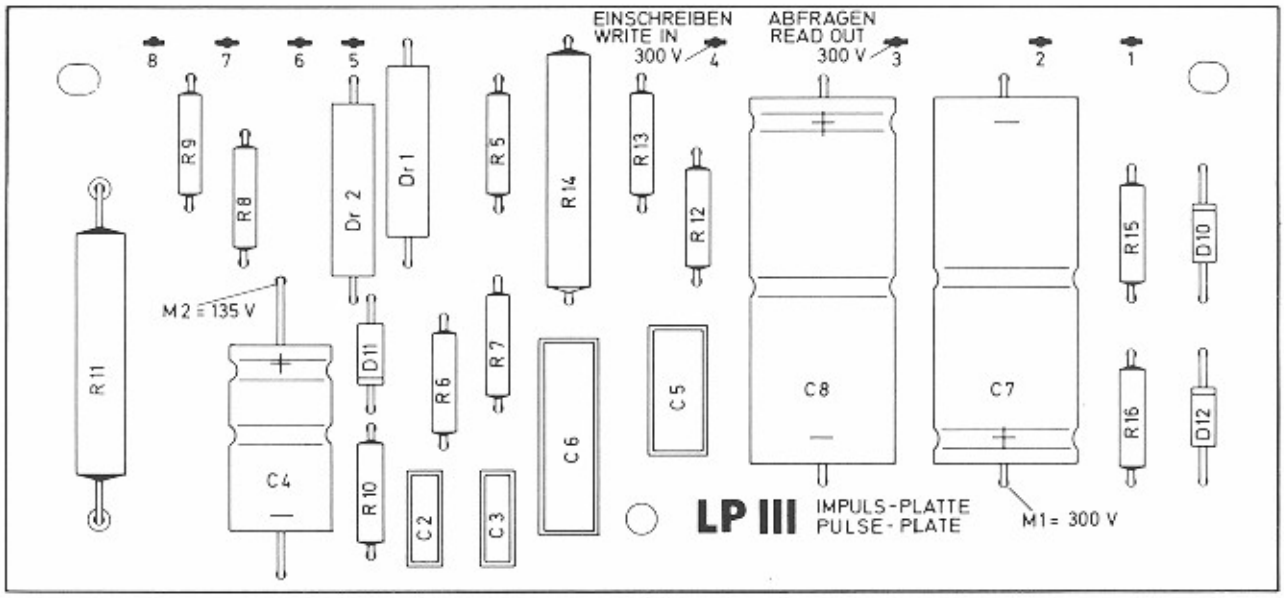


| POSITION | DESCRIPTION | PART NUMBER | QTY |
|---|---|---|---|
| | PULSE PLATE, LP III, ASSEMBLED | 41472 | 1 |
| | -PULSE PLATE, WITHOUT PARTS | 207383 | 1 |
| R5 | --CARBON RESISTOR 47 OHM | 221129 | 1 |
| R6 | --CARBON RESISTOR 47 OHM | 221129 | 1 |
| R7 | --CARBON RESISTOR 47 OHM | 221129 | 1 |
| R8 | --CARBON RESISTOR 33 K OHM | 221131 | 1 |
| R9 | --CARBON RESISTOR, WITH ZL 150 (130-140 V) 1 K OHM | 221025 | AR |
| | CARBON RESISTOR, WITH ZL 150 (140-150 V) 10 K OHM | 221028 | AR |
| | CARBON RESISTOR, WITH ZL 150 (150-165 V) 22 K OHM | 221114 | AR |
| R10 | --CARBON RESISTOR 150 K OHM | 221130 | 1 |
| R11 | --WIRE WOUND RESISTOR 7,5 K OHM | 221140 | 1 |
| | CERAMIC SPACER | 221123 | 2 |
| R12 | --CARBON RESISTOR 270 K OHM | 221126 | 1 |
| R13 | --CARBON RESISTOR 150 K OHM | 221147 | 1 |
| R14 | --CARBON RESISTOR 56 K OHM | 221128 | 1 |
| R15 | --CARBON RESISTOR 1 M OHM | 221125 | 1 |
| R16 | --CARBON RESISTOR 1 M OHM | 221125 | 1 |
| DR1 | --INDUCTOR 130 MH | 221146 | 1 |
| DR2 | --INDUCTOR 100 MH | 221145 | 1 |
| C2 | --MYLAR 0,033 MH 400 V | 220114 | 1 |
| C3 | --MYLAR 0,01 MH 630 V | 220125 | 1 |
| C4 | --LYTIC 8 MF 350/385 V | 220119 | 1 |
| C5 | --MYLAR 0,15 MF 400 V | 220117 | 1 |
| C6 | --MYLAR 0,15 MF 630 V | 220126 | 1 |
| C7 | --LYTIC 16 MF 450/500 V | 220120 | 1 |
| C8 | --LYTIC 16 MF 450/500 V | 220120 | 1 |
| D10 | --SILICIONE DIODE 600 V | 221119 | 1 |
| D11 | --SILICIONE DIODE 170 V | 221115 | 1 |
| D12 | --SILICIONE DIODE 600 V | 221119 | 1 |

# SPARE PARTS LIST

## Transistor - Amplifier 70 S

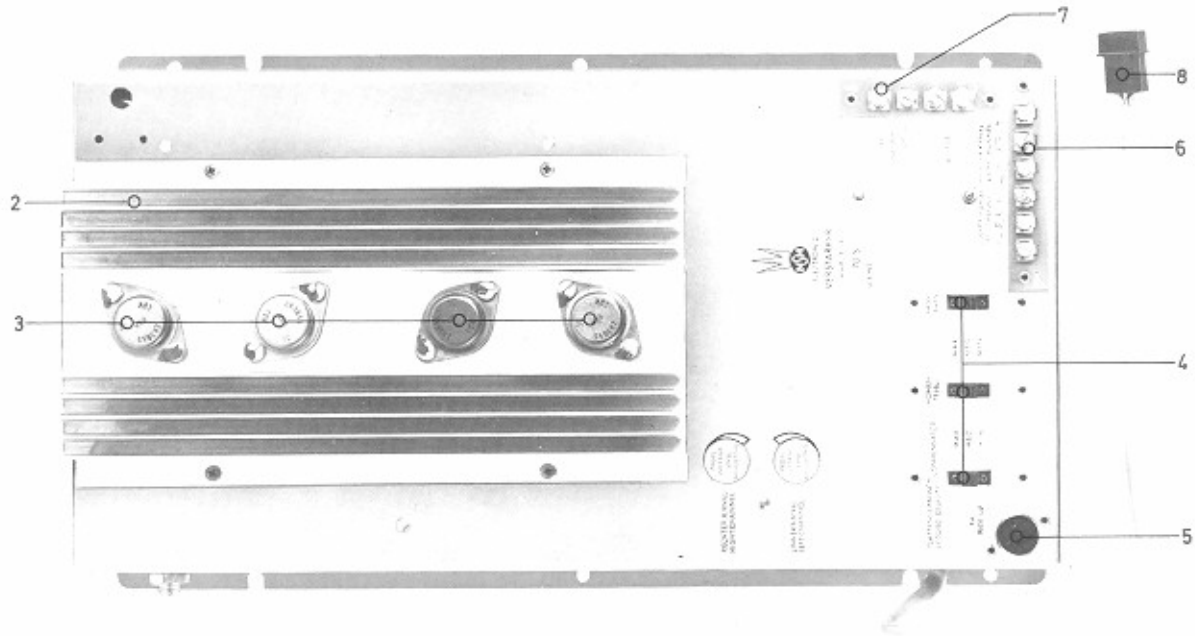


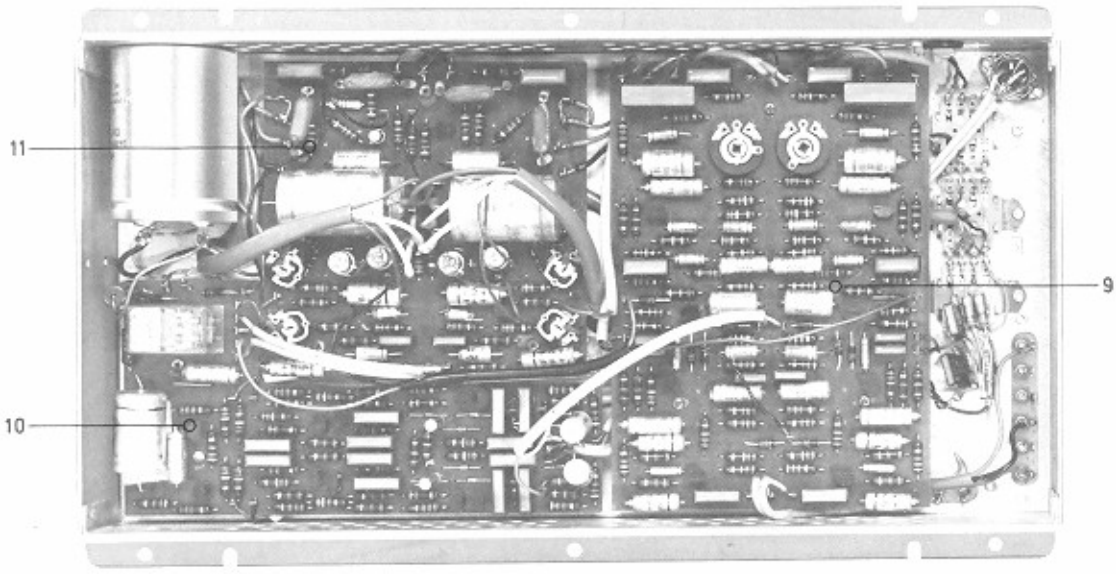


| POSITION | DESCRIPTION | | PART NUMBER | QTY |
|---|---|---|---|---|
| 1 | AMPLIFIER ASSEMBLY | | 224091 | 1 |
| 2 | -HEAT SINK | | 10151 | 1 |
| 3 | --POWER TRANSISTOR | | 221106 | 4 |
| 4 | -SLIDERSWITCH | | 222151 | 3 |
| 5 | -METAL SOCKET MAB 3 S | | 225030 | 1 |
| 6 | -CONNECTOR PLATE, OUTPUT | | 10153 | 1 |
| 7 | -CONNECTOR PLATE, REMOTE CONTROL | | 10152 | 1 |
| 8 | -AMP PLUG 3 PRONG | | 225175 | 1 |
| 9 | -PRINTED CIRCUIT PLATE, LP I S, ASSEMBLED | SEE PAGE VS 100 | | 1 |
| 10 | -PRINTED CIRCUIT PLATE, LP II S, ASSEMBLED | SEE PAGE VS 200 | | 1 |
| 11 | -PRINTED CIRCUIT PLATE, LP III S, ASSEMBLED | SEE PAGE VS 300 | | 1 |

# SPARE PARTS LIST

**Transistor - Amplifier 70 S**

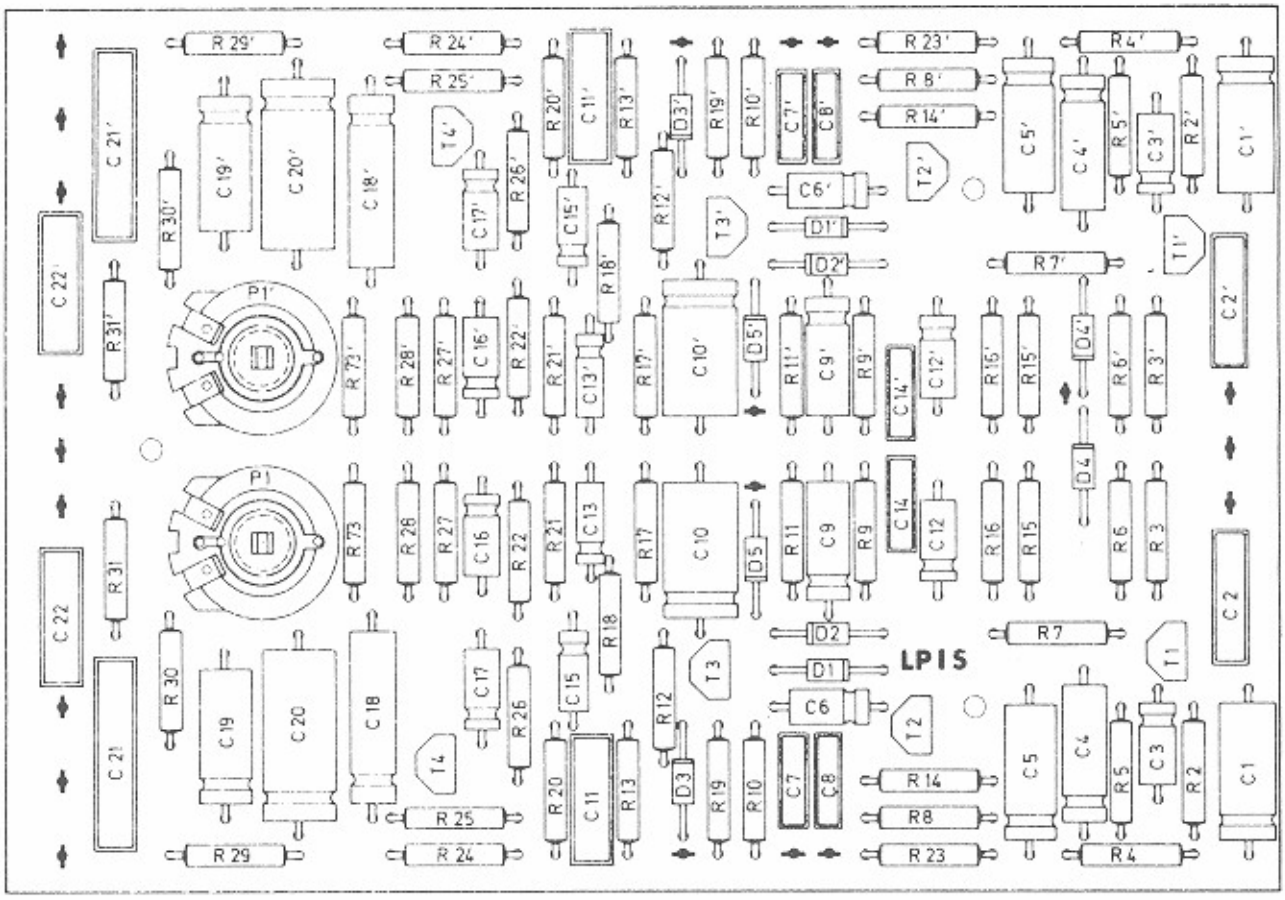


| POSITION | DESCRIPTION | | | PART NUMBER | QTY |
|---|---|---|---|---|---|
| | PLATE LP I S, ASSEMBLED | | | 10154 | |
| R 2/R 2' | CARBON RESISTOR | 2 Megohm | 1/3 W ± 10% | 221208 | |
| R 3/R 3' | CARBON RESISTOR | 8 200 Ohm | 1/3 W ± 10% | 221202 | |
| R 4/R 4' | CARBON RESISTOR | 3 300 Ohm | 1/3 W ± 10% | 221201 | |
| R 5/R 5' | CARBON RESISTOR | 1 Megohm | 1/3 W ± 10% | 221008 | |
| R 6/R 6' | CARBON RESISTOR | 120 000 Ohm | 1/3 W ± 10% | 221164 | |
| R 7/R 7' | CARBON RESISTOR | 27 000 Ohm | 1/3 W ± 10% | 221093 | |
| R 8/R 8' | CARBON RESISTOR | 1000 Ohm | 1/3 W ± 10% | 221025 | |
| R 9/R 9' | CARBON RESISTOR | 3 900 Ohm | 1/3 W ± 10% | 221190 | |
| R10/R10' | CARBON RESISTOR | 82 000 Ohm | 1/3 W ± 10% | 221203 | |
| R11/R11' | CARBON RESISTOR | 390 000 Ohm | 1/3 W ± 10% | 221206 | |
| R12/R12' | CARBON RESISTOR | 10 000 Ohm | 1/3 W ± 10% | 221028 | |
| R13/R13' | CARBON RESISTOR | 8 200 Ohm | 1/3 W ± 10% | 221202 | |
| R14/R14' | CARBON RESISTOR | 22 000 Ohm | 1/3 W ± 10% | 221014 | |
| R15/R15' | CARBON RESISTOR | 2 700 Ohm | 1/3 W ± 10% | 221200 | |
| R16/R16' | CARBON RESISTOR | 560 Ohm | 1/3 W ± 10% | 221191 | |
| R17/R17' | CARBON RESISTOR | 4 700 Ohm | 1/3 W ± 10% | 221173 | |
| R18/R18' | CARBON RESISTOR | 120 Ohm | 1/3 W ± 10% | 221150 | |
| R19/R19' | CARBON RESISTOR | 27 000 Ohm | 1/3 W ± 10% | 221093 | |
| R20/R20' | CARBON RESISTOR | 820 000 Ohm | 1/3 W ± 10% | 221207 | |
| R21/R21' | CARBON RESISTOR | 120 000 Ohm | 1/3 W ± 10% | 221164 | |
| R22/R22' | CARBON RESISTOR | 82 000 Ohm | 1/3 W ± 10% | 221203 | |
| R23/R23' | CARBON RESISTOR | 10 000 Ohm | 1/3 W ± 10% | 221028 | |
| R24/R24' | CARBON RESISTOR | 10 000 Ohm | 1/3 W ± 10% | 221028 | |
| R25/R25' | CARBON RESISTOR | 10 000 Ohm | 1/3 W ± 10% | 221028 | |
| R26/R26' | CARBON RESISTOR | 100 000 Ohm | 1/3 W ± 10% | 221204 | |
| R27/R27' | CARBON RESISTOR | 120 000 Ohm | 1/3 W ± 10% | 221164 | |
| R28/R28' | CARBON RESISTOR | 3 900 Ohm | 1/3 W ± 10% | 221190 | |
| R29/R29' | CARBON RESISTOR | 8 200 Ohm | 1/3 W ± 10% | 221202 | |
| R30/R30' | CARBON RESISTOR | 2 200 Ohm | 1/3 W ± 10% | 221199 | |
| R31/R31' | CARBON RESISTOR | 22 000 Ohm | 1/3 W ± 10% | 221014 | |
| R73/R73' | CARBON RESISTOR | 68 Ohm | 1/3 W ± 10% | 221189 | |

CONTINUED 1

# SPARE PARTS LIST

**Transistor - Amplifier 70 S**

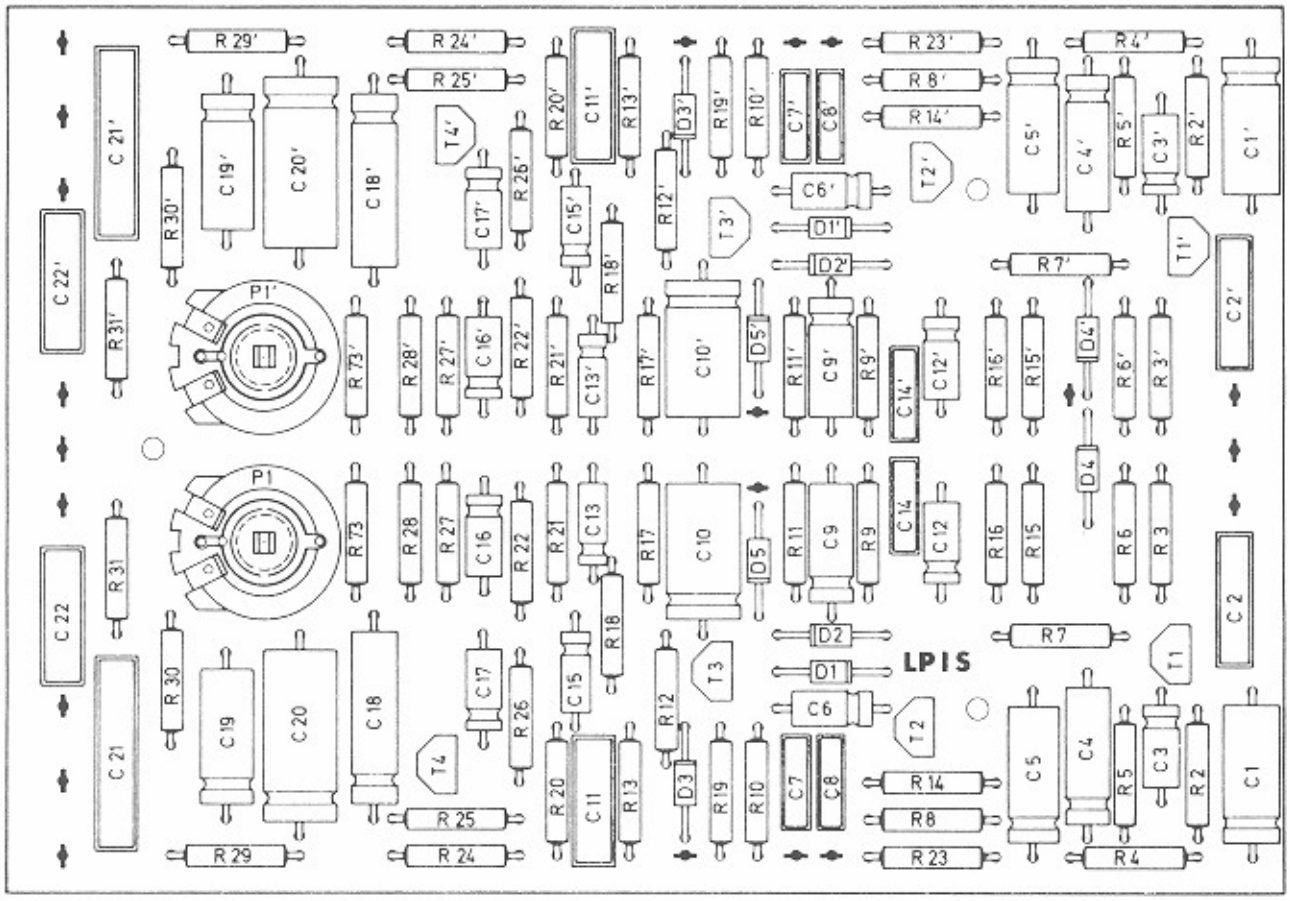


| POSITION | DESCRIPTION | | PART NUMBER | QTY | |
|---|---|---|---|---|---|
| | CONTINUED 1 | | | | |
| C 1/C 1' | LYTIC | 50 Mfd/ 15 V | 220101 | | |
| C 2/C 2' | MYLAR | 0.1 Mfd250 V | 220115 | | |
| C 3/C 3' | LYTIC | 1 Mfd/ 35 V | 220095 | | |
| C 4/C 4' | LYTIC | 50 Mfd/ 15 V | 220101 | | |
| C 5/C 5' | LYTIC | 50 Mfd/ 25 V | 220102 | | |
| C 6/C 6' | LYTIC | 10 Mfd/ 10V | 220097 | | |
| C 7/C 7' | MYLAR | 0.033 Mfd/250 V | 220113 | | |
| C 8/C 8' | MYLAR | 0.015 Mfd/400 V | 220111 | | |
| C 9/C 9' | LYTIC | 100 Mfd/ 3 V | 220104 | | |
| C10/C10' | LYTIC | 250 Mfd/ 6 V | 220106 | | |
| C11/C11' | MYLAR | 0.22 Mfd/250 V | 220077 | | |
| C12/C12' | LYTIC | 25 Mfd/ 10 V | 220099 | | |
| C13/C13' | LYTIC | 25 Mfd/ 10 V | 220099 | | |
| C14/C14' | MYLAR | 0.01 Mfd/400 V | 220110 | | |
| C15/C15' | LYTIC | 5 Mfd/ 35 V | 220096 | | |
| C16/C16' | LYTIC | 10 Mfd/ 25 V | 220098 | | |
| C17/C17' | LYTIC | 10 Mfd/ 25 V | 220098 | | |
| C18/C18' | LYTIC | 50 Mfd/ 25 V | 220102 | | |
| C19/C19' | LYTIC | 10 Mfd/ 25 V | 220098 | | |
| C20/C20' | LYTIC | 100 Mfd/ 35 V | 220105 | | |
| C21/C21' | MYLAR | 0.68 Mfd/250 V | 220132 | | |
| C22/C22' | MYLAR | 0,22 Mfd/250 V | 220077 | | |
| T 1/T 1' | TRANSISTOR | BC 149 B | 221110 | | |
| T 2/T 2' | TRANSISTOR | BC 149 B | 221110 | | |
| T 3/T 3' | TRANSISTOR | BC 147 B | 221099 | | |
| T 4/T 4' | TRANSISTOR | BC 147 B | 221099 | | |
| D 1/D 1' | SILICONE DIODE | 1N 4004 | 221115 | | |
| D 2/D 2' | SILICONE DIODE | 1N 4004 | 221115 | | |
| D 3/D 3' | SILICONE DIODE | 1N 4004 | 221115 | | |
| D 4/D 4' | SILICONE DIODE | 1N 4004 | 221115 | | |
| D 5/D 5' | SILICONE DIODE | 1N 4004 | 221115 | | |
| P 1/P 1' | TRIMMER RESISTOR | 500 OHM 0,3 W lin | 221166 | | |

# SPARE PARTS LIST

**Transistor - Amplifier 70 S**

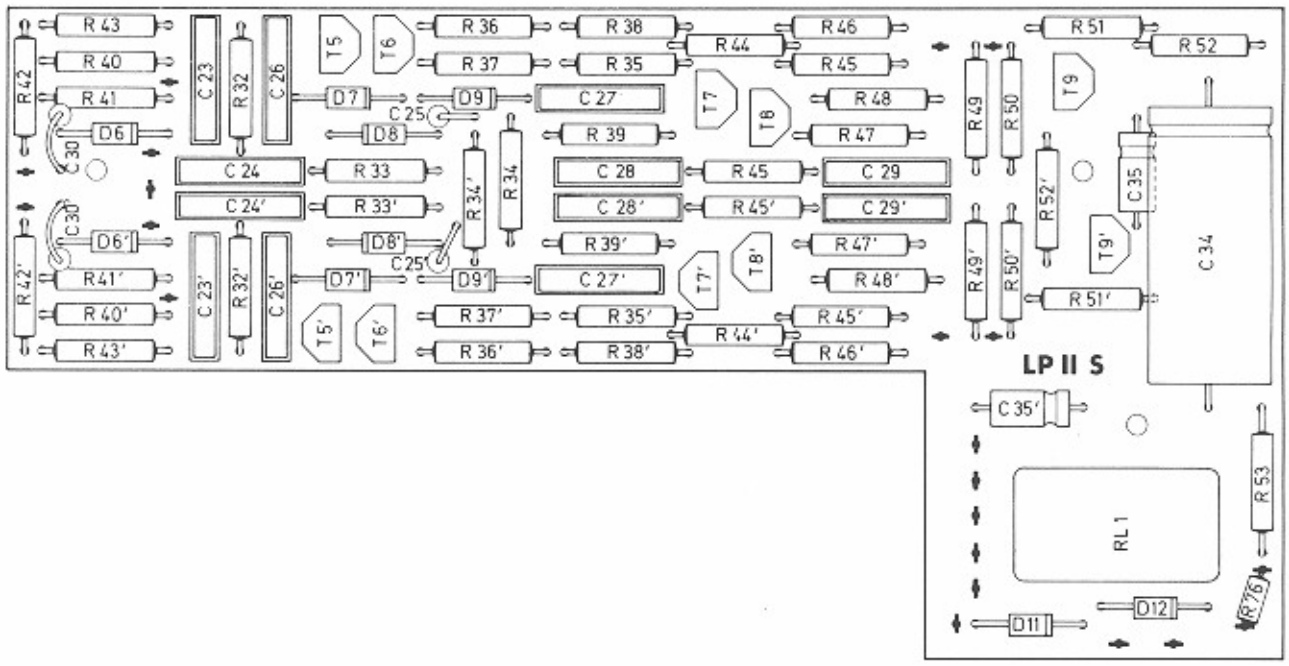


| POSITION | DESCRIPTION | | | PART NUMBER | QTY | |
|---|---|---|---|---|---|---|
| | PLATE LP II S, ASSEMBLED | | | 10155 | | |
| R32/R32' | CARBON RESISTOR | 150 000 | Ohm ⅓W ± 10% | 221130 | | |
| R33/R33' | CARBON RESISTOR | 150 000 | Ohm ⅓W ± 10% | 221130 | | |
| R34/R34' | CARBON RESISTOR | 10 000 | Ohm ⅓W ± 10% | 221028 | | |
| R35/R35' | CARBON RESISTOR | 1 | Megohm ⅓W ± 10% | 221008 | | |
| R36/R36' | CARBON RESISTOR | 5 600 | Ohm ⅓W ± 10% | 221091 | | |
| R37/R37' | CARBON RESISTOR | 68 | Ohm ⅓W ± 10% | 221189 | | |
| R38/R38' | CARBON RESISTOR | 1 | Megohm ⅓W ± 10% | 221008 | | |
| R39/R39' | CARBON RESISTOR | 220 000 | Ohm ⅓W ± 10% | 221205 | | |
| R40/R40' | CARBON RESISTOR | 10 000 | Ohm ⅓W ± 10% | 221028 | | |
| R41/R41' | CARBON RESISTOR | 15 | Ohm ⅓W ± 10% | 221181 | | |
| R42/R42' | CARBON RESISTOR | 4 700 | Ohm ⅓W ± 10% | 221173 | | |
| R43/R43' | CARBON RESISTOR | 4 700 | Ohm ⅓W ± 10% | 221173 | | |
| R44/R44' | CARBON RESISTOR | 3 900 | Ohm ⅓W ± 10% | 221190 | | |
| R45/R45' | CARBON RESISTOR | 1 | Megohm ⅓W ± 10% | 221008 | | |
| R46/R46' | CARBON RESISTOR | 5 600 | Ohm ⅓W ± 10% | 221091 | | |
| R47/R47' | CARBON RESISTOR | 68 | Ohm ⅓W ± 10% | 221189 | | |
| R48/R48' | CARBON RESISTOR | 220 000 | Ohm ⅓W ± 10% | 221205 | | |
| R49/R49' | CARBON RESISTOR | 150 000 | Ohm ⅓W ± 10% | 221130 | | |
| R50/R50' | CARBON RESISTOR | 220 000 | Ohm ⅓W ± 10% | 221205 | | |
| R51/R51' | CARBON RESISTOR | 5 600 | Ohm ⅓W ± 10% | 221091 | | |
| R52/R52' | CARBON RESISTOR | 4 700 | Ohm ⅓W ± 10% | 221173 | | |
| R53 | CARBON RESISTOR | 1 500 | Ohm ⅓W ± 10% | 221026 | | |
| R54/R54' | CARBON RESISTOR | 1 | Megohm ⅓W ± 10% | 221008 | | |
| R76 | CARBON RESISTOR | 1 000 | Ohm ⅓W ± 10% | 221183 | | |

CONTINUED 1

# SPARE PARTS LIST

**Transistor - Amplifier 70 S**

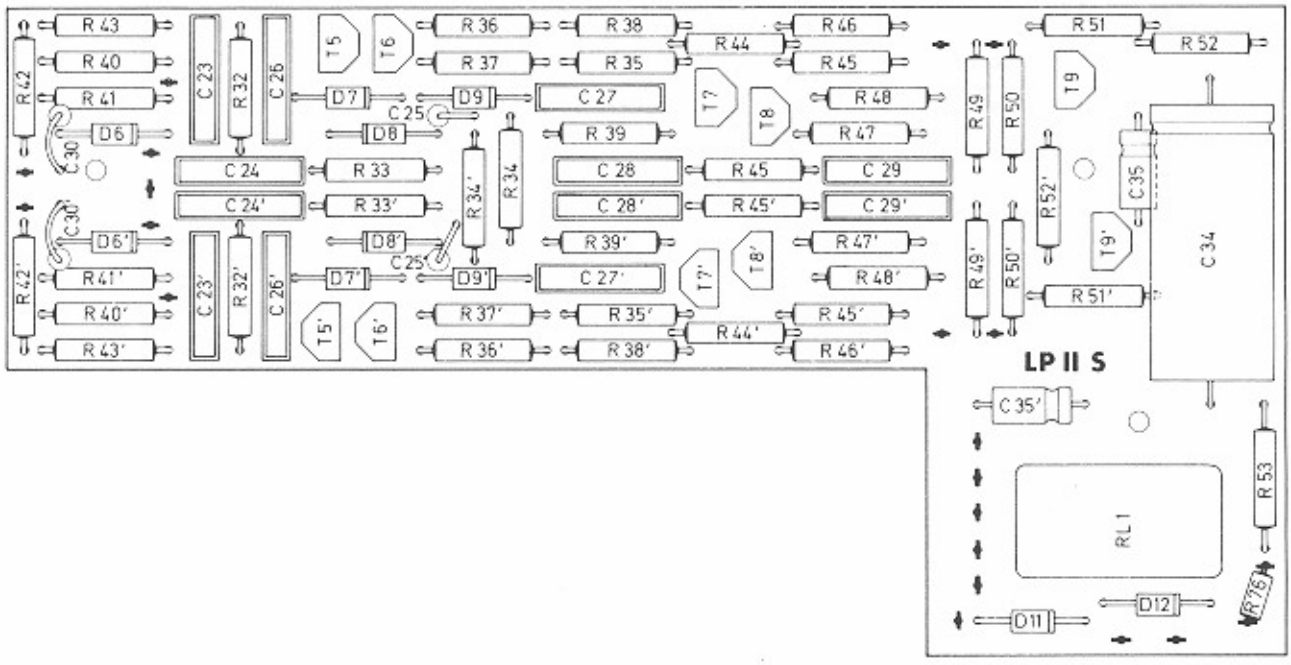


| POSITION | DESCRIPTION | | | PART NUMBER | QTY | |
|---|---|---|---|---|---|---|
| | CONTINUED 1 | | | | | |
| C23/C23' | MYLAR | | 0.1 Mfd/250 V | 220115 | | |
| C24/C24' | MYLAR | | 0.1 Mfd/250 V | 220115 | | |
| C25/C25' | LYTIC | | 5 Mfd/ 35 V | 220096 | | |
| C26/C26' | MYLAR | | 0.1 Mfd/250 V | 220115 | | |
| C27/C27' | MYLAR | | 0.1 Mfd/250 V | 220115 | | |
| C28/C28' | MYLAR | | 0.1 Mfd/250 V | 220115 | | |
| C29/C29' | MYLAR | | 0.1 Mfd/250 V | 220115 | | |
| C30/C30' | LYTIC | | 250 Mfd/ 6 V | 220106 | | |
| C34 | LYTIC | | 1000 Mfd/ 35 V | 220107 | | |
| C35/C35' | LYTIC | | 5 Mfd/ 35 V | 220096 | | |
| T 5/T 5' | TRANSISTOR | | BC 147 B | 220099 | | |
| T 6/T 6' | TRANSISTOR | | BC 147 B | 220099 | | |
| T 7/T 7' | TRANSISTOR | | BC 147 B | 220099 | | |
| T 8/T 8' | TRANSISTOR | | BC 147 B | 220099 | | |
| T 9/T 9' | TRANSISTOR | | BC 147 B | 220099 | | |
| D 6/D 6' | SILICONE DIODE | | 1N 4148 | 221114 | | |
| D 7/D 7' | SILICONE DIODE | | 1N 4148 | 221114 | | |
| D 8/D 8' | SILICONE DIODE | | 1N 4148 | 221114 | | |
| D 9/D 9' | SILICONE DIODE | | 1N 4148 | 221114 | | |
| D11 | SILICONE DIODE | | 1N 4004 | 221115 | | |
| D12 | SILICONE DIODE | | 1N 4004 | 221115 | | |
| RL1 | MUTING RELAY | V23154 - | N 0721 - B 110 | 223180 | | |

# SPARE PARTS LIST

## Transistor - Amplifier 70 S

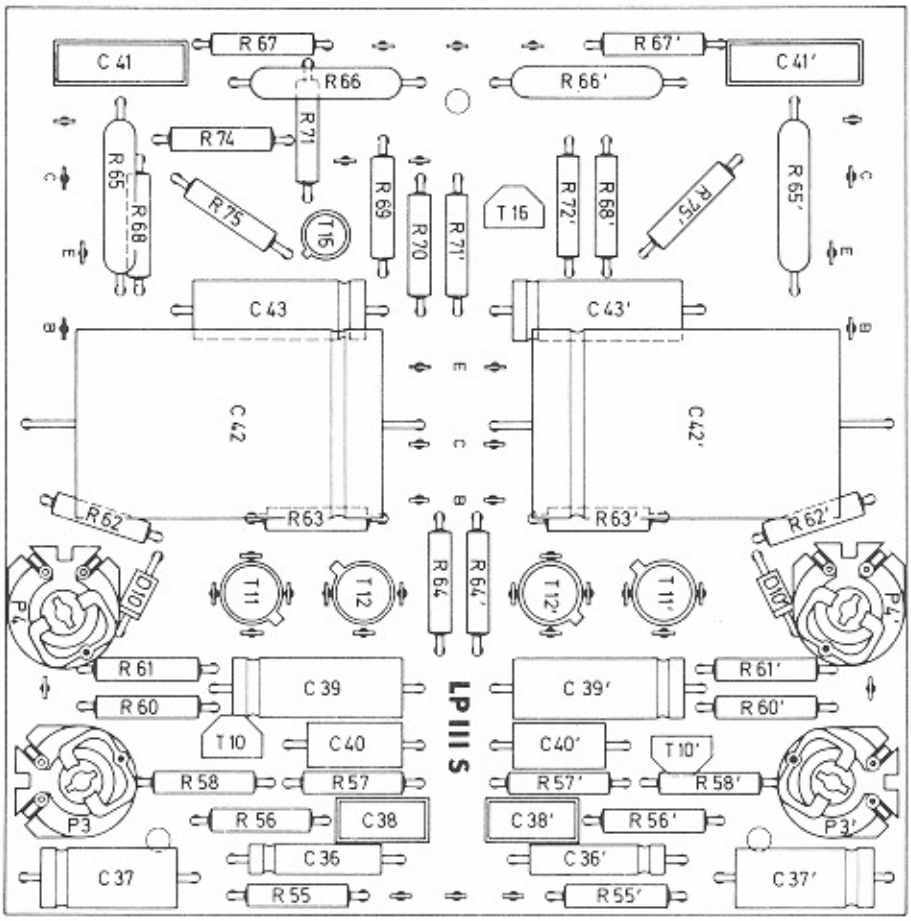


| POSITION | DESCRIPTION | | | PART NUMBER | QTY |
|---|---|---|---|---|---|
| | PLATE LP III S, ASSEMBLED | | | 10156 | |
| R55/R55' | CARBON RESISTOR | 1 000 Ohm | 1/3 W ± 10% | 221025 | |
| R56/R56' | CARBON RESISTOR | 1 000 Ohm | 1/3 W ± 10% | 221025 | |
| R57/R57' | CARBON RESISTOR | 1 200 Ohm | 1/3 W ± 10% | 221021 | |
| R58/R58' | CARBON RESISTOR | 12 000 Ohm | 1/3 W ± 10% | 221012 | |
| R60/R60' | CARBON RESISTOR | 1 000 Ohm | 1/3 W ± 10% | 221025 | |
| R61/R61' | CARBON RESISTOR | 2 700 Ohm | 1/3 W ± 10% | 221200 | |
| R62/R62' | CARBON RESISTOR | 560 Ohm | 1/3 W ± 10% | 221191 | |
| R63/R63' | CARBON RESISTOR | 330 Ohm | 1/3 W ± 10% | 221195 | |
| R64/R64' | CARBON RESISTOR | 330 Ohm | 1/3 W ± 10% | 221195 | |
| R65/R65' | WIRE RESISTOR | 0.47 Ohm | 2 W ± 10% | 221156 | |
| R66/R66' | WIRE RESISTOR | 0.47 Ohm | 2 W ± 10% | 221156 | |
| R67/R67' | CARBON RESISTOR | 22 Ohm | 1/3 W ± 10% | 221187 | |
| R68/R68' | CARBON RESISTOR | 8 200 Ohm | 1/3 W ± 5% | 221202 | |
| R69 | CARBON RESISTOR | 5 600 Ohm | 1/3 W ± 5% | 221014 | |
| R70 | CARBON RESISTOR | 220 Ohm | 1/3 W ± 5% | 221137 | |
| R71/R71' | CARBON RESISTOR | 4 700 Ohm | 1/3 W ± 5% | 221173 | |
| R72 | CARBON RESISTOR | 4 700 Ohm | 1/3 W ± 5% | 221173 | |
| R74 | CARBON RESISTOR | 1 500 Ohm | 1/3 W ± 5% | 221199 | |
| R75/R75' | CARBON RESISTOR | 1 200 Ohm | 1/3 W ± 5% | 221021 | |

CONTINUED 1

# SPARE PARTS LIST

## Transistor - Amplifier 70 S

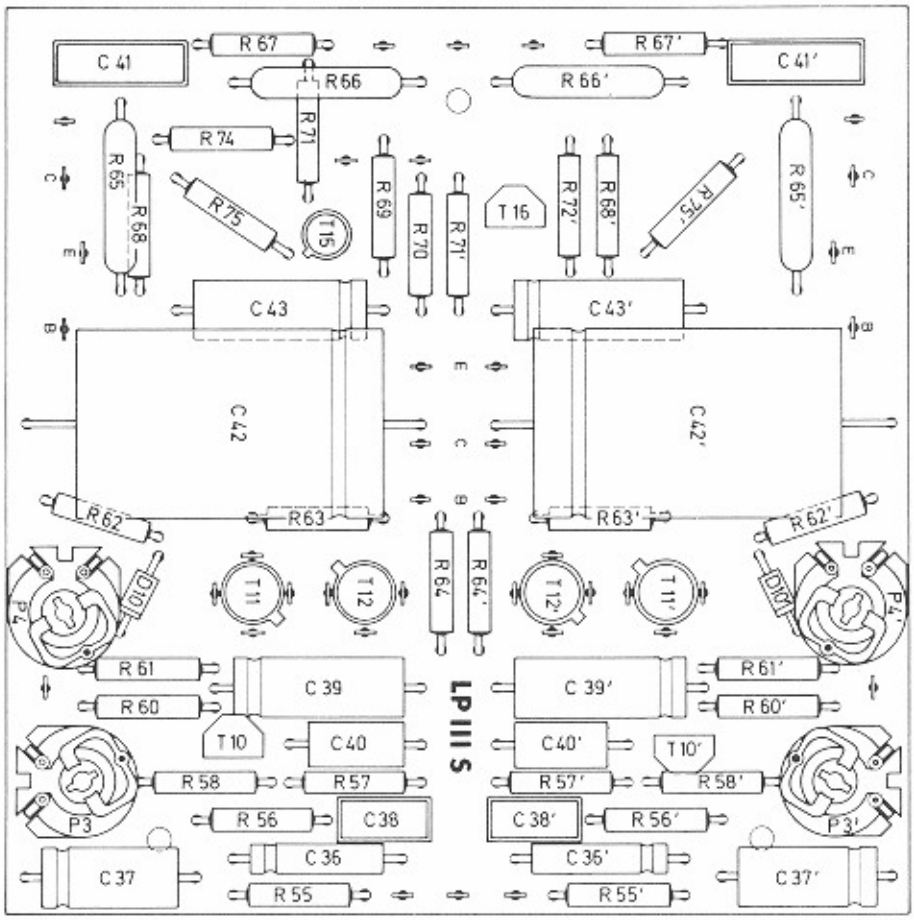


| POSITION | DESCRIPTION | | PART NUMBER | QTY | |
|---|---|---|---|---|---|
| | CONTINUED 1 | | | | |
| C36/C36' | LYTIC | 25 Mfd 10 V | 220099 | | |
| C37/C37' | LYTIC | 25 Mfd/ 35 V | 220100 | | |
| C38/C38' | MYLAR | 0.01 Mfd/400 V | 220110 | | |
| C39/C39' | LYTIC | 50 Mfd/ 35 V | 220103 | | |
| C40/C40' | MYLAR | 0.001 Mfd/160 V | 220118 | | |
| C41/C41' | MYLAR | 0.22 Mfd/250 V | 220077 | | |
| C42/C42' | LYTIC | 2500 Mfd/35/40 V | 220 108 | | |
| C43/C43' | LYTIC | 250 Mfd/ 6 V | 220106 | | |
| T10/T10' | TRANSISTOR | BC 147 B | 221099 | | |
| T11/T11' | TRANSISTOR | 40361 RCA | 221107 | | |
| T12/T12' | TRANSISTOR | 40362 RCA | 221108 | | |
| T15 | TRANSISTOR | BC 177 VI/BC 157 A | 221111 | | |
| T16 | TRANSISTOR | BC 147 B | 221099 | | |
| D10/D10' | ZENERDIODE | BZY 85 C4 V7 | 221113 | | |
| P 3/P 3' | TRIMMER RESISTOR | 500 K ohm | 221157 | | |
| P 4/P 4' | TRIMMER RESISTOR | 2,5 K ohm | 221158 | | |

# SPARE PARTS LIST

## Transistor - Amplifier 35 M

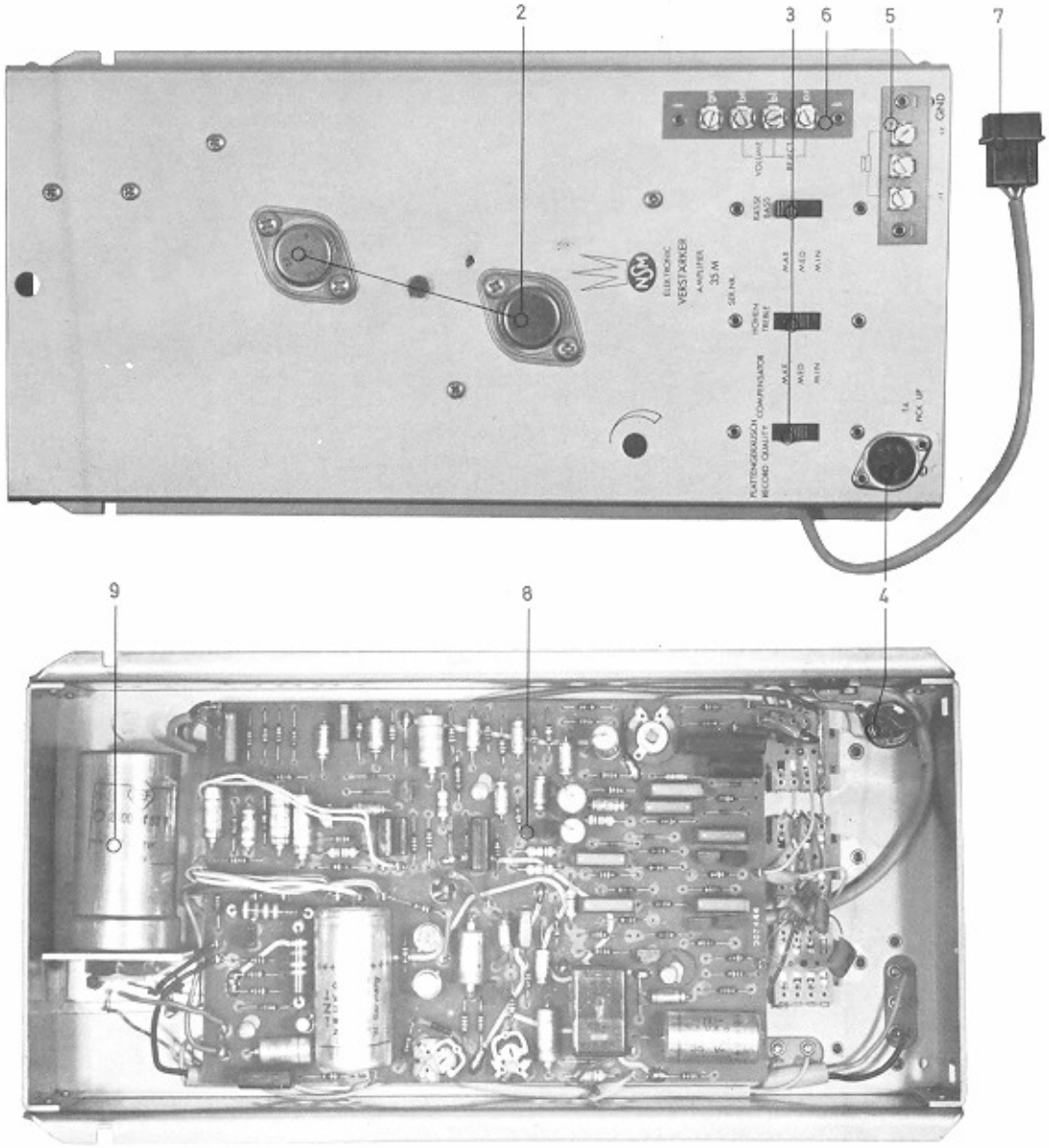


| POSITION | DESCRIPTION | PART NUMBER | QTY | |
|---|---|---|---|---|
| 1 | AMPLIFIER ASSEMBLY | 41600 | 1 | |
| 2 | -POWER TRANSISTOR 2N 3055 RCA | 221106 | 2 | |
| 3 | -SLIDERSWITCH | 222151 | 3 | |
| 4 | -METAL SOCKET MAB 3 S | 225030 | 1 | |
| 5 | -CONNECTOR PLATE, OUTPUT | 222257 | 1 | |
| 6 | -CONNECTOR PLATE, REMOTE CONTROL | 222206 | 1 | |
| 7 | -AMP PLUG 3 PRONG | 225175 | 1 | |
| 8 | -PRINTED CIRCUIT PLATE SEE PAGE VM 100 | | | |
| 9 | -ELKO 2500 MF/70 V | 220135 | 1 | |
| 9 | BRACKET FOR CAPACITOR | 23354 | 1 | |

# SPARE PARTS LIST

**Transistor - Amplifier 35 M**

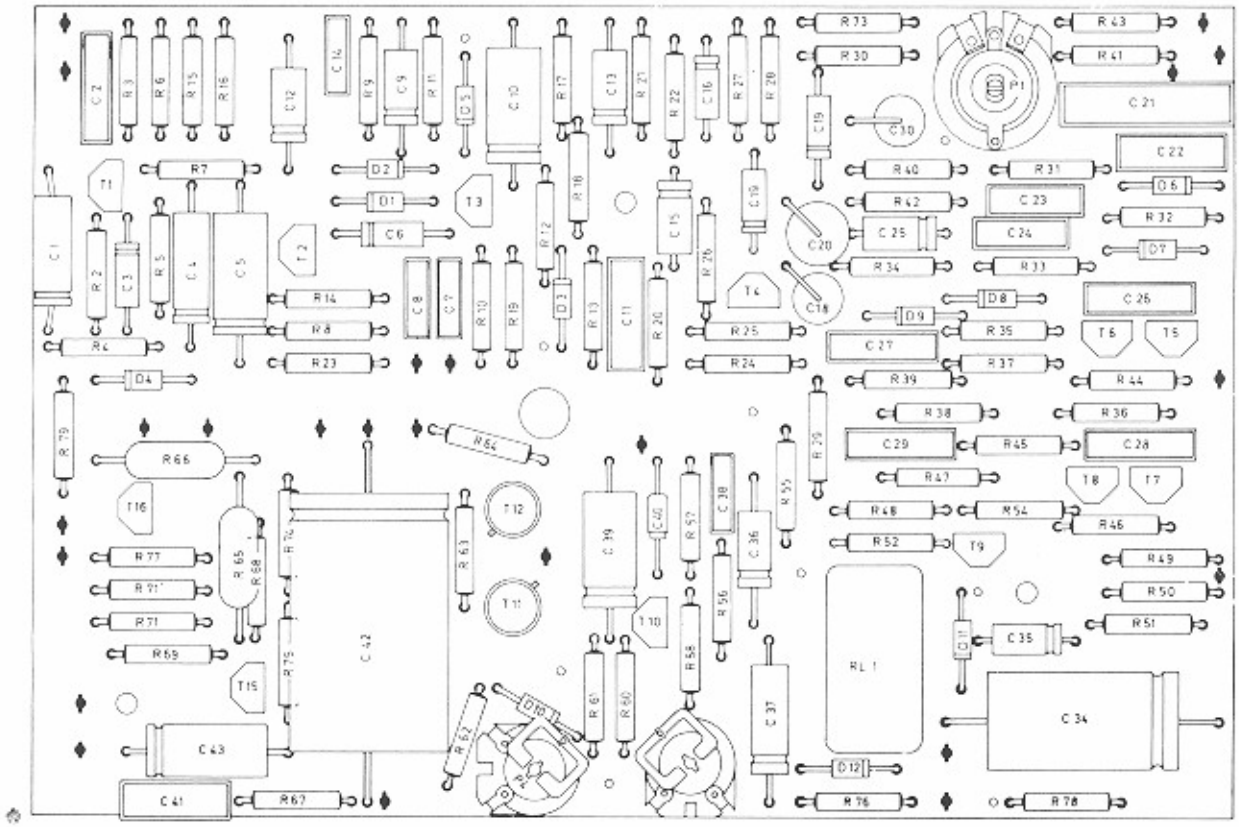

| POSITION | DESCRIPTION | | PART NUMBER | QTY |
|---|---|---|---|---|
| | PLATE ASSEMBLED | | 41685 | |
| R 2 | CARBON RESISTOR | 2 Megohm ⅓W ± 10% | | |
| R 3 | CARBON RESISTOR | 8 200 Ohm ⅓W ± 10% | | |
| R 4 | CARBON RESISTOR | 3 300 Ohm ⅓W ± 10% | | |
| R 5 | CARBON RESISTOR | 1 Megohm ⅓W ± 10% | | |
| R 6 | CARBON RESISTOR | 120 000 Ohm ⅓W ± 10% | | |
| R 7 | CARBON RESISTOR | 27 000 Ohm ⅓W ± 10% | | |
| R 8 | CARBON RESISTOR | 1 000 Ohm ⅓W ± 10% | | |
| R 9 | CARBON RESISTOR | 3 900 Ohm ⅓W ± 10% | | |
| R10 | CARBON RESISTOR | 82 000 Ohm ⅓W ± 10% | | |
| R11 | CARBON RESISTOR | 390 000 Ohm ⅓W ± 10% | | |
| R12 | CARBON RESISTOR | 10 000 Ohm ⅓W ± 10% | | |
| R13 | CARBON RESISTOR | 8 200 Ohm ⅓W ± 10% | | |
| R14 | CARBON RESISTOR | 22 000 Ohm ⅓W ± 10% | | |
| R15 | CARBON RESISTOR | 2 700 Ohm ⅓W ± 10% | | |
| R16 | CARBON RESISTOR | 560 Ohm ⅓W ± 10% | | |
| R17 | CARBON RESISTOR | 4 700 Ohm ⅓W ± 10% | | |
| R18 | CARBON RESISTOR | 120 Ohm ⅓W ± 10% | | |
| R19 | CARBON RESISTOR | 27 000 Ohm ⅓W ± 10% | | |
| R20 | CARBON RESISTOR | 820 000 Ohm ⅓W ± 10% | | |
| R21 | CARBON RESISTOR | 120 000 Ohm ⅓W ± 10% | | |
| R22 | CARBON RESISTOR | 82 000 Ohm ⅓W ± 10% | | |
| R23 | CARBON RESISTOR | 10 000 Ohm ⅓W ± 10% | | |
| R24 | CARBON RESISTOR | 10 000 Ohm ⅓W ± 10% | | |
| R25 | CARBON RESISTOR | 10 000 Ohm ⅓W ± 10% | | |
| R26 | CARBON RESISTOR | 100 000 Ohm ⅓W ± 10% | | |
| R27 | CARBON RESISTOR | 120 000 Ohm ⅓W ± 10% | | |
| R28 | CARBON RESISTOR | 3 900 Ohm ⅓W ± 10% | | |
| R29 | CARBON RESISTOR | 10 000 Ohm ⅓W ± 10% | | |
| R30 | CARBON RESISTOR | 2 200 Ohm ⅓W ± 10% | | |
| R31 | CARBON RESISTOR | 22 000 Ohm ⅓W ± 10% | | |
| R32 | CARBON RESISTOR | 150 000 Ohm ⅓W ± 10% | | |
| R33 | CARBON RESISTOR | 150 000 Ohm ⅓W ± 10% | | |
| R34 | CARBON RESISTOR | 10 000 Ohm ⅓W ± 10% | | |
| R35 | CARBON RESISTOR | 1 Megohm ⅓W ± 10% | | |
| R36 | CARBON RESISTOR | 5 600 Ohm ⅓W ± 10% | | |
| R37 | CARBON RESISTOR | 68 Ohm ⅓W ± 10% | | |
| R38 | CARBON RESISTOR | 1 Megohm ⅓W ± 10% | | |
| R39 | CARBON RESISTOR | 220 000 Ohm ⅓W ± 10% | | |
| R40 | CARBON RESISTOR | 4 700 Ohm ⅓W ± 10% | | |

CONTINUED 1

# SPARE PARTS LIST

## Transistor - Amplifier 35 M

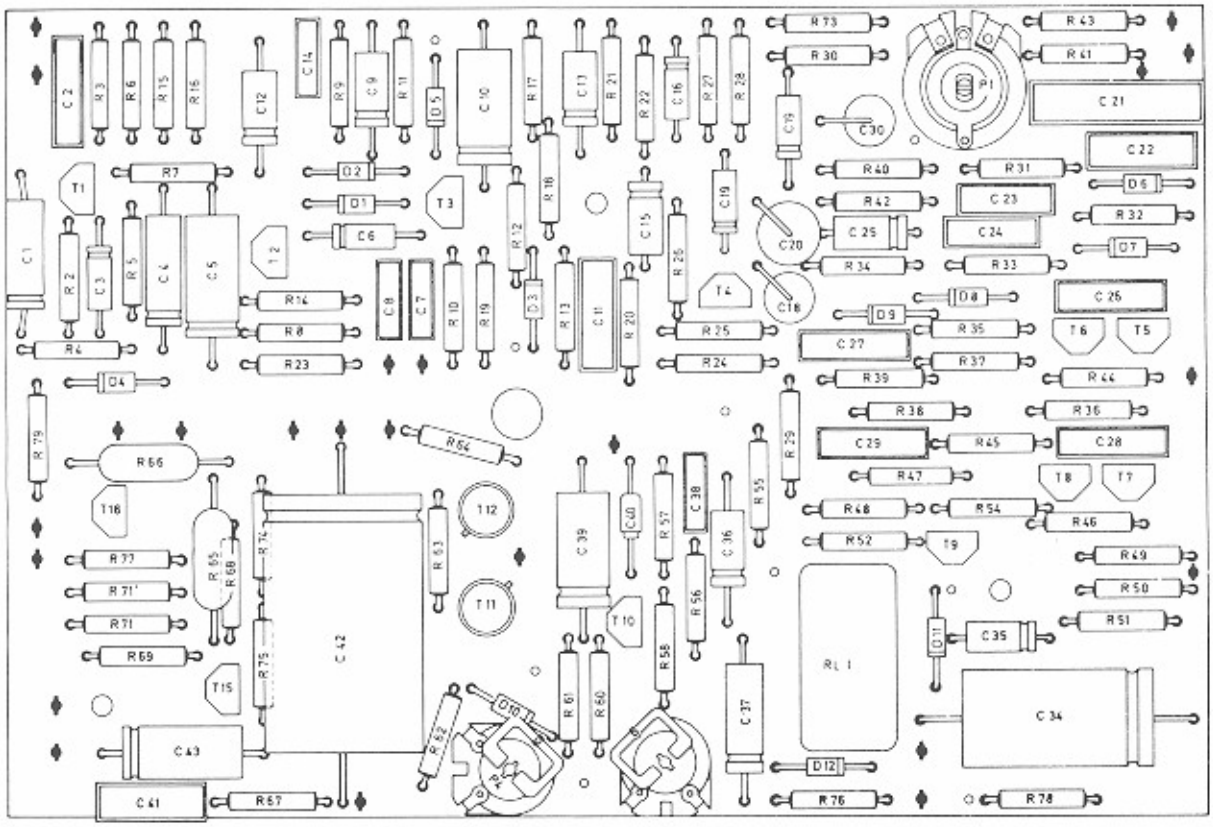

| POSITION | DESCRIPTION | | | PART NUMBER | QTY |
|---|---|---|---|---|---|
| | CONTINUED 1 | | | | |
| R41 | CARBON RESISTOR | 15 Ohm | 1/3W ± 10% | | |
| R42 | CARBON RESISTOR | 4 700 Ohm | 1/3W ± 10% | | |
| R43 | CARBON RESISTOR | 4 700 Ohm | 1/3W ± 10% | | |
| R44 | CARBON RESISTOR | 3 900 Ohm | 1/3W ± 10% | | |
| R45 | CARBON RESISTOR | 1 Megohm | 1/3W ± 10% | | |
| R46 | CARBON RESISTOR | 5 600 Ohm | 1/3W ± 10% | | |
| R47 | CARBON RESISTOR | 68 Ohm | 1/3W ± 10% | | |
| R48 | CARBON RESISTOR | 220 000 Ohm | 1/3W ± 10% | | |
| R49 | CARBON RESISTOR | 150 000 Ohm | 1/3W ± 10% | | |
| R50 | CARBON RESISTOR | 220 000 Ohm | 1/3W ± 10% | | |
| R51 | CARBON RESISTOR | 5 600 Ohm | 1/3W ± 10% | | |
| R52 | CARBON RESISTOR | 4 700 Ohm | 1/3W ± 10% | | |
| R54 | CARBON RESISTOR | 1 Megohm | 1/3W ± 10% | | |
| R55 | CARBON RESISTOR | 1 000 Ohm | 1/3W ± 10% | | |
| R56 | CARBON RESISTOR | 1 000 Ohm | 1/3W ± 10% | | |
| R57 | CARBON RESISTOR | 1 200 Ohm | 1/3W ± 10% | | |
| R58 | CARBON RESISTOR | 12 000 Ohm | 1/3W ± 10% | | |
| R60 | CARBON RESISTOR | 1 800 Ohm | 1/3W ± 10% | | |
| R61 | CARBON RESISTOR | 2 700 Ohm | 1/3W ± 10% | | |
| R62 | CARBON RESISTOR | 560 Ohm | 1/3W ± 10% | | |
| R63 | CARBON RESISTOR | 330 Ohm | 1/3W ± 10% | | |
| R64 | CARBON RESISTOR | 330 Ohm | 1/3W ± 10% | | |
| R65 | WIRE RESISTOR | 0.47 Ohm | 2 W ± 10% | | |
| R66 | WIRE RESISTOR | 0.47 Ohm | 2 W ± 10% | | |
| R67 | CARBON RESISTOR | 22 Ohm | 1/3W ± 10% | | |
| R68 | CARBON RESISTOR | 8 200 Ohm | 1/3W ± 5% | | |
| R69 | CARBON RESISTOR | 5 600 Ohm | 1/3W ± 5% | | |
| R71/R71' | CARBON RESISTOR | 4 700 Ohm | 1/3W ± 5% | | |
| R73 | CARBON RESISTOR | 68 Ohm | 1/3W ± 10% | | |
| R74 | CARBON RESISTOR | 1 000 Ohm | 1/3W ± 5% | | |
| R75 | CARBON RESISTOR | 1 200 Ohm | 1/3W ± 5% | | |
| R76 | CARBON RESISTOR | 1 000 Ohm | 1/3W ± 10% | | |
| R77 | CARBON RESISTOR | 4 700 Ohm | 1/3W ± 10% | | |
| R78 | CARBON RESISTOR | 3 300 Ohm | 1/3W ± 10% | | |
| R79 | CARBON RESISTOR | 180 Ohm | 1/3W ± 5% | | |
| RL1 | MUTE RELAY | V23154— | NO 721—B110 | | |
| | | | CONTINUED 2 | | |

# SPARE PARTS LIST

## Transistor - Amplifier 35 M

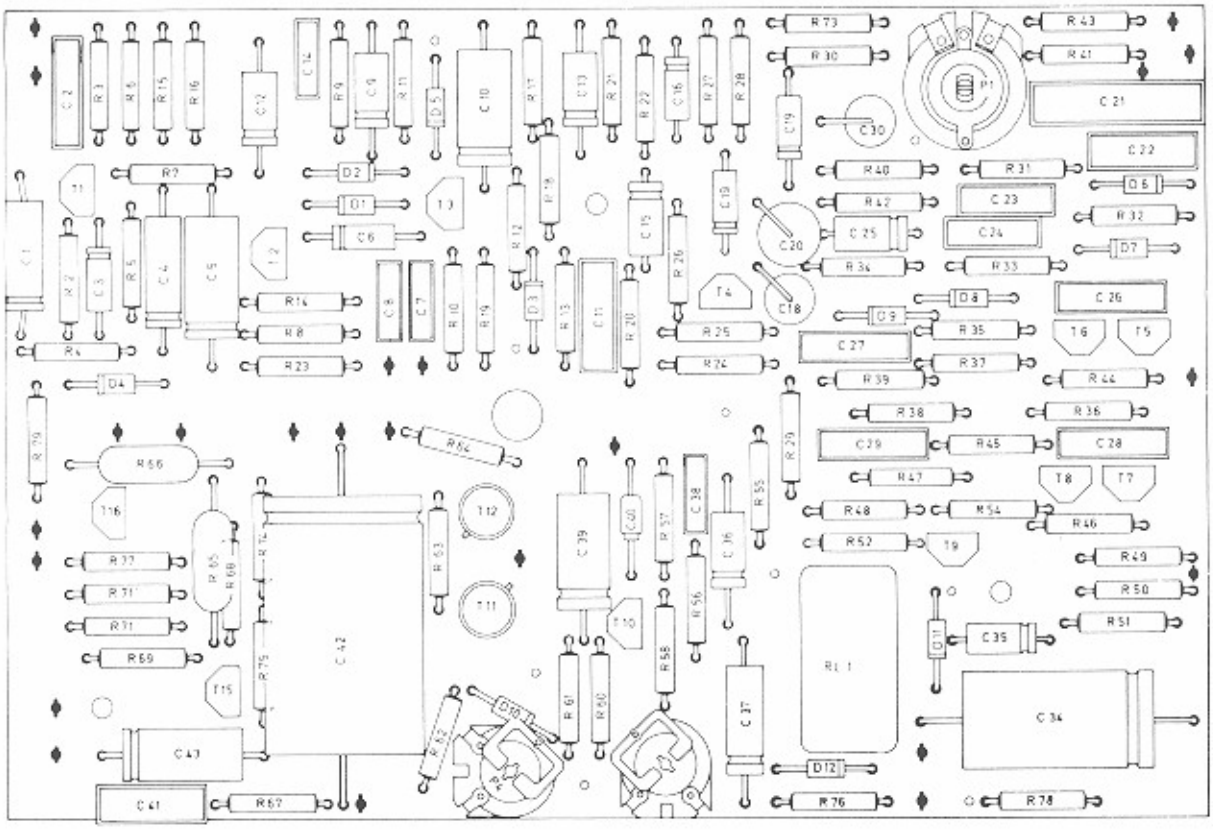

| POSITION | DESCRIPTION | | PART NUMBER | QTY |
|---|---|---|---|---|
| | CONTINUED 2 | | | |
| P 1 | TRIMMER RESISTOR | 250 Ohm ⅓W lin. | | |
| P 3 | ADJUSTING RESISTOR | 500 000 Ohm, lin. | | |
| P 4 | ADJUSTING RESISTOR | 2 500 Ohm, lin. | | |
| C 1 | LYTIC | 50 Mfd | | |
| C 2 | MYLAR | 0.1 Mfd | | |
| C 3 | LYTIC | 1 Mfd/35V | | |
| C 4 | LYTIC | 50 Mfd/15 V | | |
| C 5 | LYTIC | 50 Mfd/25 V | | |
| C 6 | LYTIC | 10 Mfd | | |
| C 7 | MYLAR | 0.033 Mfd | | |
| C 8 | MYLAR | 0.015 Mfd/400 V | | |
| C 9 | LYTIC | 100 Mfd/ 3 V | | |
| C10 | LYTIC | 250 Mfd/ 6 V | | |
| C11 | MYLAR | 0.22 Mfd | | |
| C12 | LYTIC | 25 Mfd/ 10 V | | |
| C13 | LYTIC | 25 Mfd/ 10 V | | |
| C14 | MYLAR | 0.01 Mfd | | |
| C15 | LYTIC | 5 Mfd/ 35 V | | |
| C16 | LYTIC | 10 Mfd/ 25 V | | |
| C17 | LYTIC | 10 Mfd/ 25 V | | |
| C18 | LYTIC | 50 Mfd/ 25 V | | |
| C19 | LYTIC | 10 Mfd/ 25 V | | |
| C20 | LYTIC | 100 Mfd/ 35 V | | |
| C21 | MYLAR | 0.68 Mfd | | |
| C22 | MYLAR | 0.22 Mfd | | |
| C23 | MYLAR | 0.1 Mfd | | |
| C24 | MYLAR | 0.1 Mfd | | |
| C25 | LYTIC | 5 Mfd/ 35 V | | |
| C26 | MYLAR | 0.1 Mfd | | |
| C27 | MYLAR | 0.1 Mfd | | |
| C28 | MYLAR | 0.1 Mfd | | |
| C29 | MYLAR | 0.1 Mfd | | |
| C30 | LYTIC | 250 Mfd/ 6 V | | |
| C31 | MYLAR | 0.01 Mfd | | |
| C32 | MYLAR | 0.033 Mfd | | |
| C33 | MYLAR | 0.1 Mfd | | |
| C34 | LYTIC | 500 Mfd | | |
| C35 | LYTIC | 5 Mfd/ 35 V | | |
| | | CONTINUED 3 | | |

# SPARE PARTS LIST

## Transistor - Amplifier 35 M

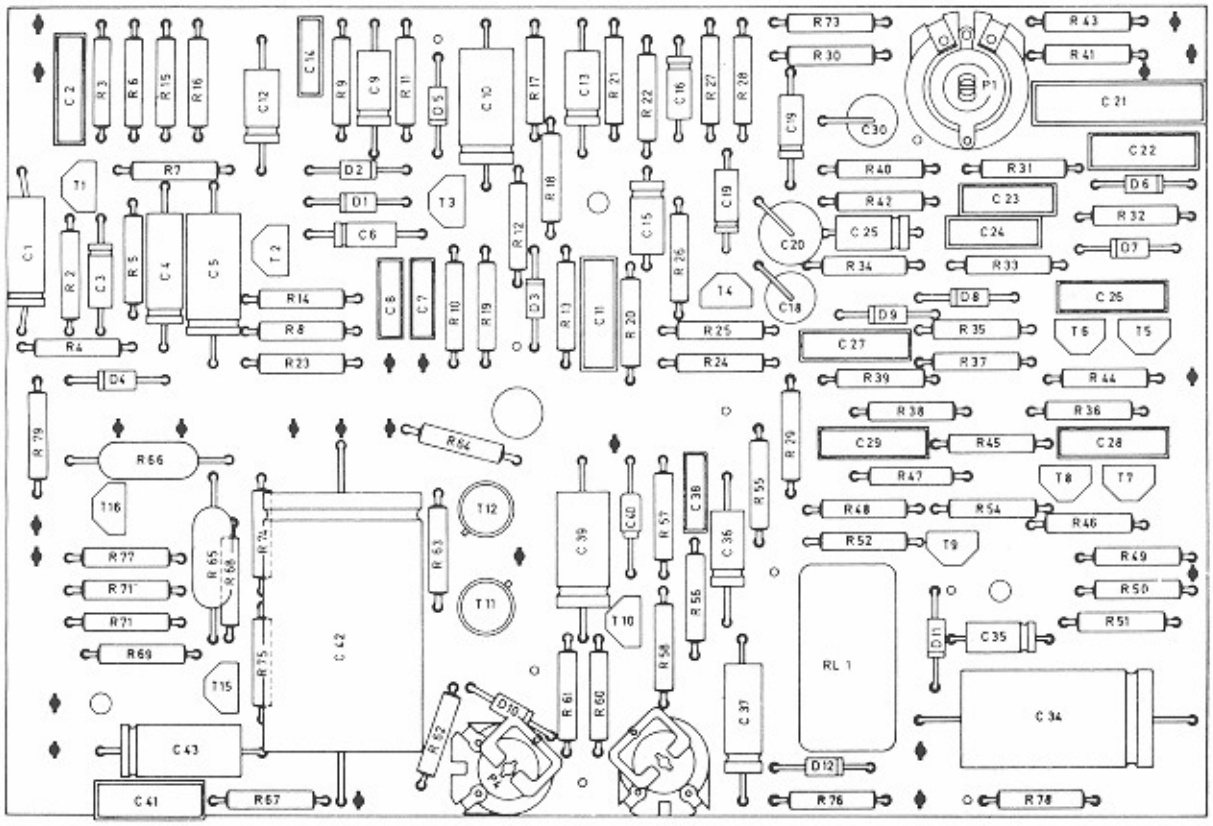


| POSITION | DESCRIPTION | | PART NUMBER | QTY | |
|---|---|---|---|---|---|
| | CONTINUED 3 | | | | |
| C36 | LYTIC | 25 Mfd/ 10 V | | | |
| C37 | LYTIC | 25 Mfd/ 35 V | | | |
| C38 | MYLAR | 0.01 Mfd | | | |
| C39 | LYTIC | 50 Mfd/ 35 V | | | |
| C40 | MYLAR | 0.001 Mfd/160 V | | | |
| C41 | MYLAR | 0.22 Mfd | | | |
| C42 | LYTIC | 2500 Mfd/ 35 V | | | |
| C43 | LYTIC | 250 Mfd/ 6 V | | | |
| C80 | LYTIC | 2500 Mfd/ 70 V | | | |
| D 1 | SILICON DIODE | 1 N 4148 | | | |
| D 2 | SILICON DIODE | 1 N 4148 | | | |
| D 3 | SILICON DIODE | 1 N 4148 | | | |
| D 4 | SILICON DIODE | 1 N 4148 | | | |
| D 5 | SILICON DIODE | 1 N 4148 | | | |
| D 6 | SILICON DIODE | 1 N 4148 | | | |
| D 7 | SILICON DIODE | 1 N 4148 | | | |
| D 8 | SILICON DIODE | 1 N 4148 | | | |
| D 9 | SILICON DIODE | 1 N 4148 | | | |
| D10 | ZENER DIODE | BZY 85 C4 V7 | | | |
| D11 | SILICON DIODE | 1 N 4148 | | | |
| D12 | SILICON DIODE | 1 N 4148 | | | |
| T 1 | TRANSISTOR | BC 149 B | | | |
| T 2 | TRANSISTOR | BC 149 B | | | |
| T 3 | TRANSISTOR | BC 147 B | | | |
| T 4 | TRANSISTOR | BC 147 B | | | |
| T 5 | TRANSISTOR | BC 147 B | | | |
| T 6 | TRANSISTOR | BC 147 B | | | |
| T 7 | TRANSISTOR | BC 147 B | | | |
| T 8 | TRANSISTOR | BC 147 B | | | |
| T 9 | TRANSISTOR | BC 147 B | | | |
| T10 | TRANSISTOR | BC 147 B | | | |
| T11 | TRANSISTOR | 40361 RCA | | | |
| T12 | TRANSISTOR | 40362 RCA | | | |
| T13 | TRANSISTOR | 2N 3055 RCA | | | |
| T14 | TRANSISTOR | 2N 3055 RCA | | | |
| T15 | TRANSISTOR | BC 177 VI/BC 157 A | | | |
| T16 | TRANSISTOR | BC 147 B | | | |

# SPARE PARTS LIST

## Cable Harnesses

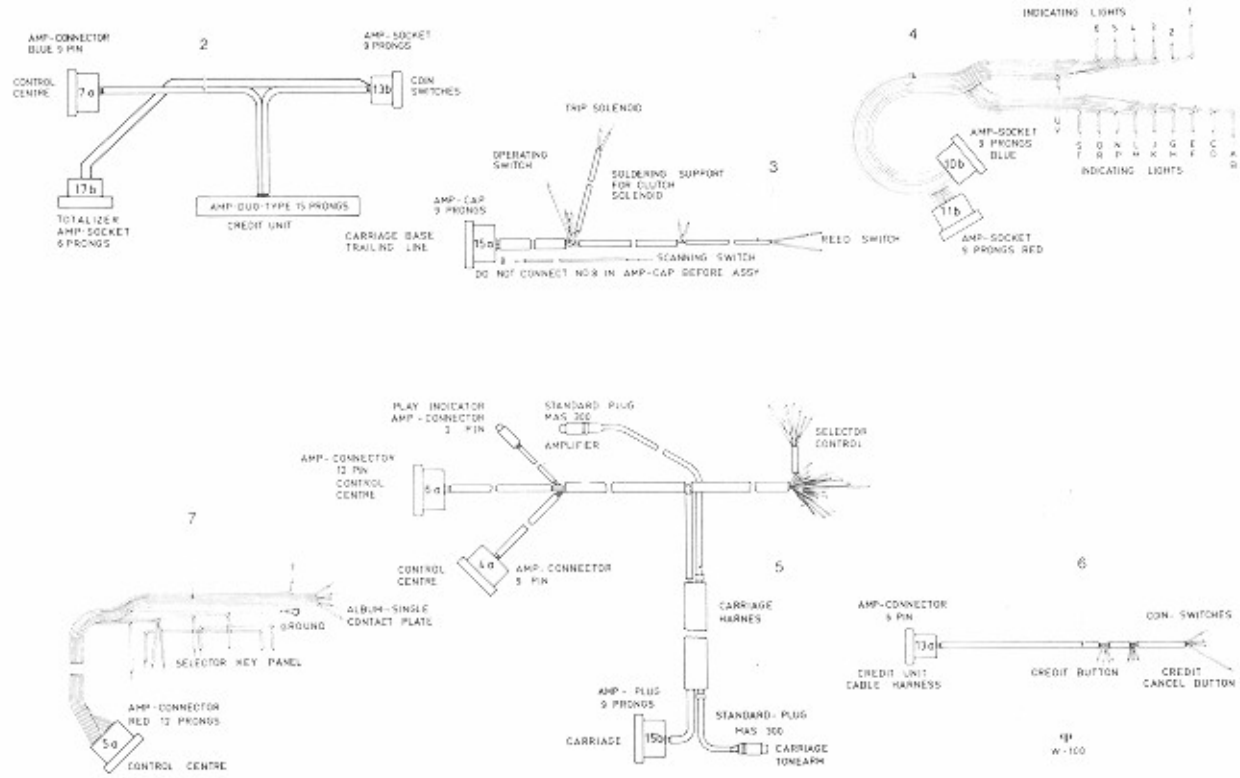


| POSITION | DESCRIPTION | PART NUMBER | QTY | |
|---|---|---|---|---|
| 1 | CABLE HARNESSES | | | |
| 2 | -CABLE HARNESS CREDIT UNIT LEAD WIRE | 41582 | 1 | |
| 3 | -CABLE HARNESS CARRIAGE | 41507 | 1 | |
| 4 | -CABLE HARNESS SELECTION PLAYING INDICATOR | 41672 | 1 | |
| 5 | -CABLE HARNESS SELECTOR CONTROL | 41600 | 1 | |
| 6 | -CABLE HARNESS COIN SWITCHES | 41577 | 1 | |
| 7 | -CABLE HARNESS CONTROL FOR SELECTOR KEY | 41605 | 1 | |

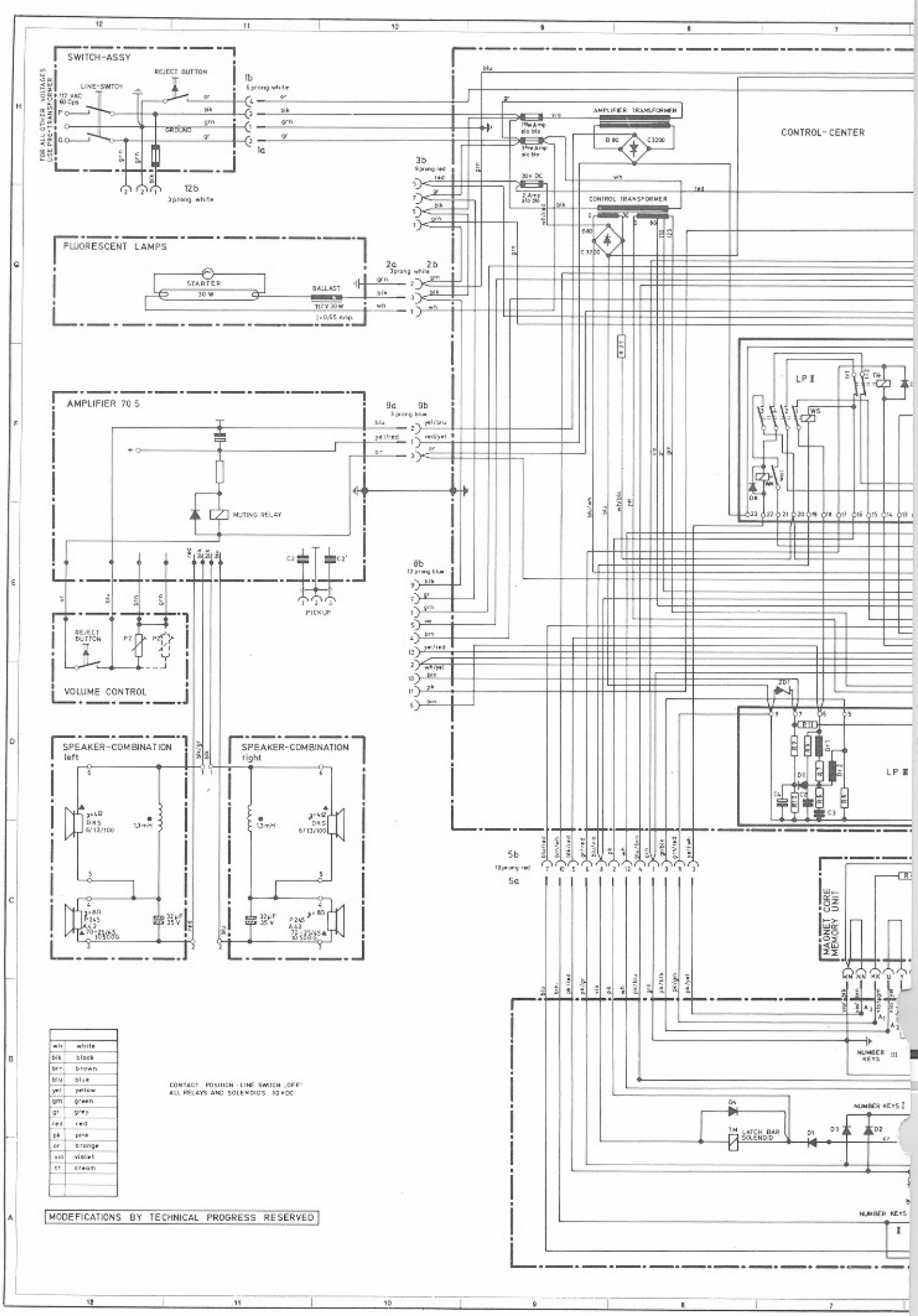
SWITCH-ASSY
REJECT BUTTON
LINE-SWITCH
GROUND
1b
5 prong white
1a
12b
3 prong white
FOR ALL OTHER VOLTAGES USE PRE-TRANSFORMER
FLUORESCENT LAMPS
STARTER
30 W
BALLAST
2a
3 prong white
2b
AMPLIFIER 70 S
9a
9b
3 prong blue
MUTING RELAY
PICKUP
REJECT BUTTON
VOLUME CONTROL
SPEAKER-COMBINATION left
SPEAKER-COMBINATION right
AMPLIFIER TRANSFORMER
CONTROL TRANSFORMER
CONTROL-CENTER
LP II
LP III
8b
12 prong blue
5b
12 prong red
5a
MAGNET CORE MEMORY UNIT
NUMBER KEYS III
NUMBER KEYS II
NUMBER KEYS I
LATCH BAR SOLENOID
wh white
blk black
brn brown
blu blue
yel yellow
grn green
gr grey
red red
pk pink
or orange
vio violet
cr cream
CONTACT POSITION - LINE SWITCH „OFF"
ALL RELAYS AND SOLENOIDS 50 VDC
MODEFICATIONS BY TECHNICAL PROGRESS RESERVED

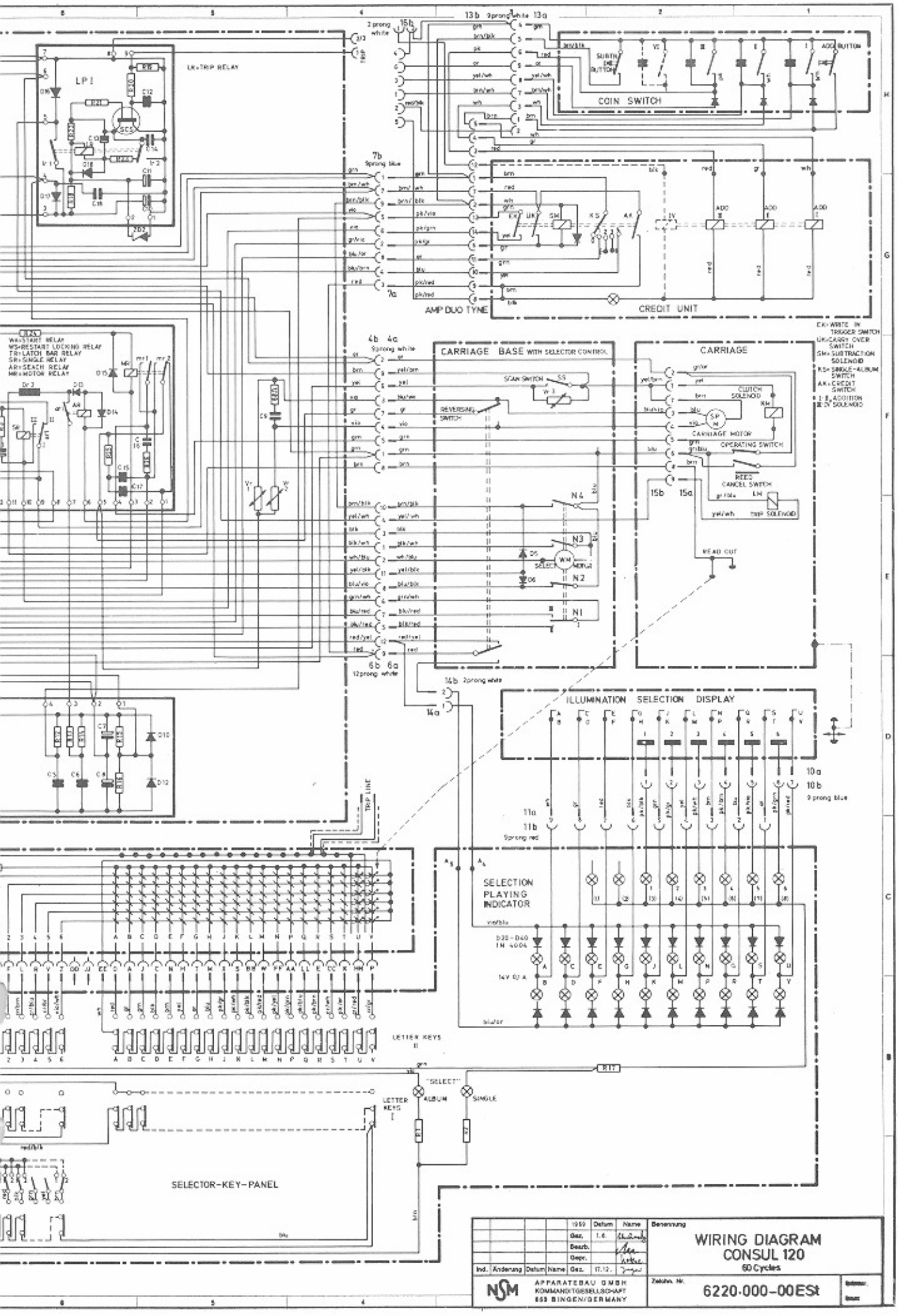
LK=TRIP RELAY
COIN SWITCH
ADD BUTTON
CREDIT UNIT
AMP DUO TYNE
CARRIAGE BASE WITH SELECTOR CONTROL
CARRIAGE
SCAN SWITCH
REVERSING SWITCH
CLUTCH SOLENOID
CARRIAGE MOTOR
OPERATING SWITCH
REED CANCEL SWITCH
READ OUT
ILLUMINATION SELECTION DISPLAY
SELECTION PLAYING INDICATOR
LETTER KEYS
"SELECT"
ALBUM
SINGLE
SELECTOR-KEY-PANEL
WIRING DIAGRAM
CONSUL 120
60 Cycles
APPARATEBAU GMBH
KOMMANDITGESELLSCHAFT
653 BINGEN/GERMANY
6220-000-00ESt