UNIT DESCRIPTION

CD CHANGER

FOR NSM-PHONOGRAPHS

EE IV-CD TECHNOLOGY

to
Technical Information, Assy

174 903	SILVER CITY
174 831	SILVER SKY
174 486	FASCINATION
175 274	SOUNDMASTER
175 040	FIREBIRD/COUNTRY
176 046	THE PERFORMER "GRAND"

NSM
Aktiengesellschaft
Saarlandstraße 240
6530 Bingen am Rhein

INDEX

1 PICKUP FUNCTION

The pickup serves to transport the CD's between the magazines and the player.

ATTENTION! When the CD changer has the switch at the window (upper right), the transport does **not** function if the window is open.
If the window is opened while the CD is playing, the title will be played to the end, but the CD will only be transported back after the window is closed.

1.1 Transport

The lift is moved via a stepping motor controlled by the microprocessor of the control unit. The distance between 2 CD slots is 8 motor steps (1 opto counter step).
During the run the light barrier OPTSP, which is directly connected to the drivewheel, checks the motor's position every 4 steps. Stepping errors are immediately recognized and displayed with Er 75.
Together with the light barrier OPEND the end position of the lift is verified. Should a mistake appear here (signal too late or early) the display shows Er 76.

1.2 Pull Holder

With both grip levers, brought into lock position by CD motors MOGRL for left and MOGRR for right, the CD holders with their CD's are pulled out of the magazine. The light barrier OPPUM reports the correct position of the CD holder in the pickup unit.
If there is no report 2 sec. after switching on the motor, the display will show Er 71 for the left magazine or Er 72 for the right magazine.

1.3 Return Holder

To return a CD holder to its magazine, either motor MOGRL for the left magazine or MOGRR for the right magazine is switched on in the opposite direction.
Light barriers OPGRL or OPGRR report the end position of the grips.
If the report does not appear within 2 sec. after switching on the motor, the display shows Er 73 for the left magazine or Er 74 for the right magazine.

1.3.1 Feature

If you want the CD to remain on the player after it finishes playing, the solder bridge LB3 on the pickup driver board must be connected.
If the cabinet switch is pulled out, the tray with the CD is returned to the magazine.

2 PICKUP DRIVER

2.1 Lift Control

With output port IC3 the microprocessor of the control unit controls switch transistors T 2-5 via drivers T 6-9. These drive the unipolar coil of the stepping motor (ST4, Pin 1-6). Using signal OPSTP (ST4, Pin 7) the microprocessor controls the position of the motors.
Together with signal OPEND (ST 3, Pin 8) the end position of the lift is reported via input port IC 1.

2.2 Grip Control

Both of the grip motors (MOGRL for the left magazine and MOGRR for the right magazine) are driven from the double motor bridge IC 6 via output port IC 3.
While pulling a CD from the magazine the signal OPPUM (ST 3, Pin 7) reports the end position of the CD holder in the pickup to the microprocessor of the control unit.
While returning the CD it recognizes the end position of the grips via signals OPGRL (ST 3, Pin 5) for left and OPGRR (ST 3, Pin 6) for right.

2.3 Control of the CD Player

Microcomputer IC 8 (T018) is used to convert the incoming serial data in I^2C-Bus format from the decoder panel into parallel signals that can be processed.
The microprocessor of the control unit communicates with it via ports IC 4 and IC 2.

3 PLAYER

3.1 Disc Player CDM3

The CDM3 contains the components laser diode, play motor, radial motor, and focus unit.
It reads the data from the CD.

3.2 Servo Panel

The servo panel contains the components to control the CDM3.
They consist primarily of the photodiode signal processor, the radial error processor, the drivers for the laser diode, the focus unit, the radial motor and the playing motor.

4 PCB DECODER BOARD

The components servoprocessor, decoder, digital filter, DA converter and NF output driver are combined on the decoder board. It also contains the circuit to process the complete power supply for decoder board CDM3 and servopanel.

5 MAGAZINES

2 equal magazines that are equipped with 50 CD holders each are in the CD changer. With different CD holders it is possible to play 5- or 3-inch CD's.
The magazine can be swung out and totally taken out.
Equipping with or changing CD's can be done simply by taking out the respective CD holders, inserting the new CD into the holder and pushing it back till locks in the magazine.

6 CD CHANGER 100,
test, set, adjust

6.1 GENERAL INFORMATION

Please note the illustration of the CD changer on the last page regarding the following text.
After exchanging units their functions must be checked and, if needed, certain adjustments must be made.
To exchange the playing unit the CD changer can remain in the phonograph. But to remove or install the lift the changer has to be removed from the machine; tests and adjustments are only possible at a bench tester or at the machine with appropriate extensions!
Take care that the changer is set down on supports so that the board disc (12) or the main axle (14) which protrude from the cabinet floor are not pushed inside. Otherwise the board disc will jam the gear (2); a displaced axle changes the position of the upper distance sleeve so that the lift drives against it and blocks!

In service program step P60, Pt. 1.5.5 "Test CD Changer" the grips can be moved left or right with Keys "4"/"5" or "6"/"5" and the lift can be moved up or down with key "2"/"8". With Key 1 the CD player can be started and stopped.

For fine adjustments of the lift position the lift can be moved with Key "3" (+) or "9" (-) one motor step at a time (equals about 0,5 mm height difference) either up or down; this option is available for ES-IV CD phonographs as of Program Index 004.
The distance between two magazine slots is 8 motor steps (or 1 opto step.).
In the displays the present status of the respective opto mask and the time in seconds during which the lift position is held are shown.

6.2 MAGAZINE

The magazines in swung-in and locked position are supported by height-adjustable studs. Changing the height setting can be necessary when the lift is exchanged; setting see Pt. 4 "Lift".

6.3 PLAYING UNIT

To exchange the playing unit with CD player
- remove both magazines
- pull lift up on belts
- swing support clamps on chassis of playing unit out
- carefully (!) pick up playing unit, watch balance washers under cabinet
- open plug connections
- installation of playing unit in opposite sequence
- function test:
  - remove decorative cover (01) and check if axle of suspension plate is in the center of the upper lift bore.
  - choose CD, check if CD is securely clamped in play position.
  - further tests see Pt. 6.4 "Lift".

6.4 LIFT

To exchange the lift as well as to check and adjust the opto coupler of the CD changer, completely remove the CD changer, disconnect cables, remove rear wall.

- From the rear side of the machine pull lift (04) up by the gear belt (02), interrupt connection between lift and gear belt by unscrewing the gear belt lock (03).
- Pull out plug of connecting cable (06).
- Remove board disc (12) after removal of washer.
- Pull distance sleeve (13) at bottom of main axle (14) from cabinet floor upwards; remove securing clamp of main axle from inside of cabinet.
- Remove securing clamp of guiding axle (10) from inside of cabinet.
- Pull guiding axle down through floor of cabinet.
- Push main axle down until upper distance sleeve can be removed.
  If main axle is pulled out all the way, do not mistake upper and lower distance sleeves; they are of different length!
- Remove lift; mount exchange lift in opposite sequence.
- Function test, basic setting; CD changer must be completely connected to operate either with extensions to phonographs or a bench tester:
  - turn on test program P60/5, "test CD changer" F5. All functions of the changer can be checked, see excerpt of service program below:

.ll functions of the changer can be tested individually.

:D changer
est

Enter "5" and "H", Display 2 "F5".

Keep in mind the code numbers for the individual changer functions as per the following keyboard illustration:

Input	Function
1	CD-Player, Start/Stop
2	Lift, upwardw
8	Lift, downwards
4	Grip left
6	Grip right
5	Return holder
0	Stop lift at magazine space
3	*) Motor steps, upwards (per 0,5 mm)
9	*) Motor steps, downwards (per 0,5 mm)

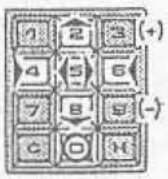

Display:

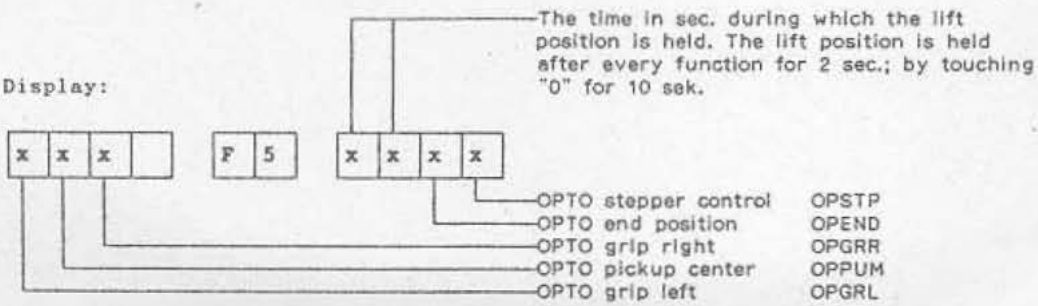

Meaning of displays: OPTO lit up = "0", OPTO darkened = "1".

'erminate test. Actuate housing switch.

*) from Progr.-Index 004

- The basic setting occurs in parked position at Magazine Slot 25/75. Drive pick-up to this position with Keys "2" and "8".
  The lift is held after each function in this position for 2 sec.; with Key "0" for 10 sec.
- Drive cassette in and out with Keys "4"/"5" or "6"/"5".
  Check function for smooth movement.
  The respective grip lever must fall into the cassette w/o hindrance!
- To adjust lift height loosen belt lock and move up or down; then tighten screws!
- Move lift down one motor step (about 0,5 mm height difference) with Key "9" (-); same test for smooth movement.
- Drive to normal park position with key "0" and with Key "3" (+); switch lift one motor step above normal position. Same check for smooth movement.
- Set magazine height: If magazine slots do not align with lift, then adjust lift only to one magazine at first. After that the other magazine is adjusted with support screw (11/15) to the correct height.
- The light barrier (08) on the step motor must be in parked position 25/75 in the center of the opto scanner OPSTP (09) (status display of OPSTP in display = "1"). If necessary, loosen screw on hexagon bolt and set PCB with opto coupler to center of mask.
- To adjust opto coupler OPEND (05) lift must be driven down to bottom. Drive lift upwards with Key "3" (press 4 times) or manually with one half opto step; the mask (16) must release OPEND (05) when OPSTP (09) opens the light mask, displayed by "0". Adjustment done by shifting of light mask angle (16) of OPEND, displayed by transition of "0" to "1" or "1" to "0".
- Select CD in normal program. In the parked position of the playing position the lift must have a gap to the lower end position.
- The distance between a cassette and the clamping dish should be at least 1 mm during a gripping procedure. So that the clamping dish can be magnetically attracted, the decorative cover must be in place.
- The CD must run w/o touch and grinding sounds when in a suspended position.
  To test the function get cassette with CD from magazine by pressing correct keys and place it on CD player in play position.
  Turn on CD player with Key "1". After test with Key "1" or any of the other function test keys turn off CD player. The clamping dish must clamp down on CD exactly in center.
- Check function of fork light masks OPGRR, OPGRL, OPPUM as per test "F5". The respective mask must cover the light barrier in its entire breadth when Status Display "1" is shown and may not touch the housing physically.

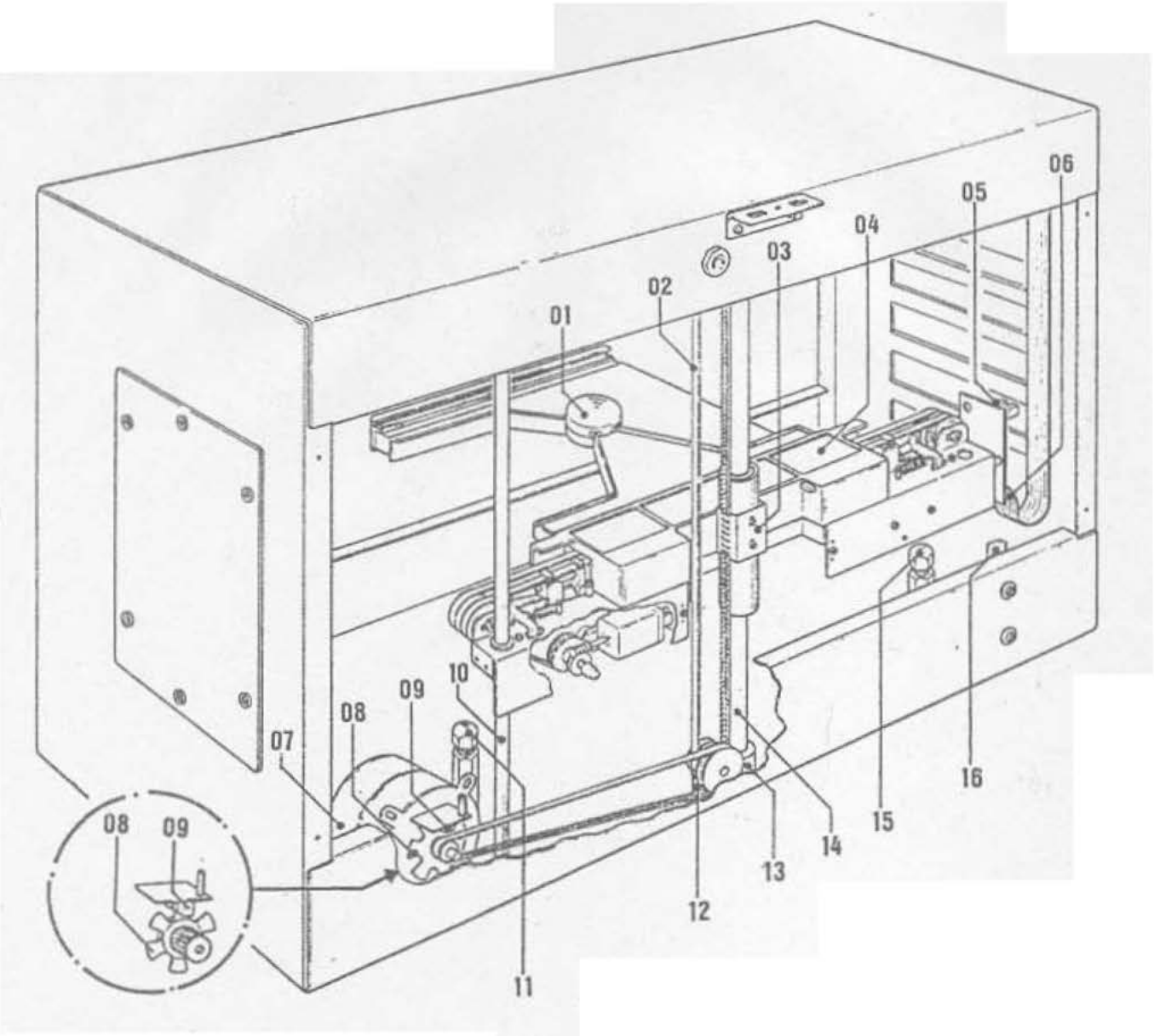

CD CHANGER, COMPL.

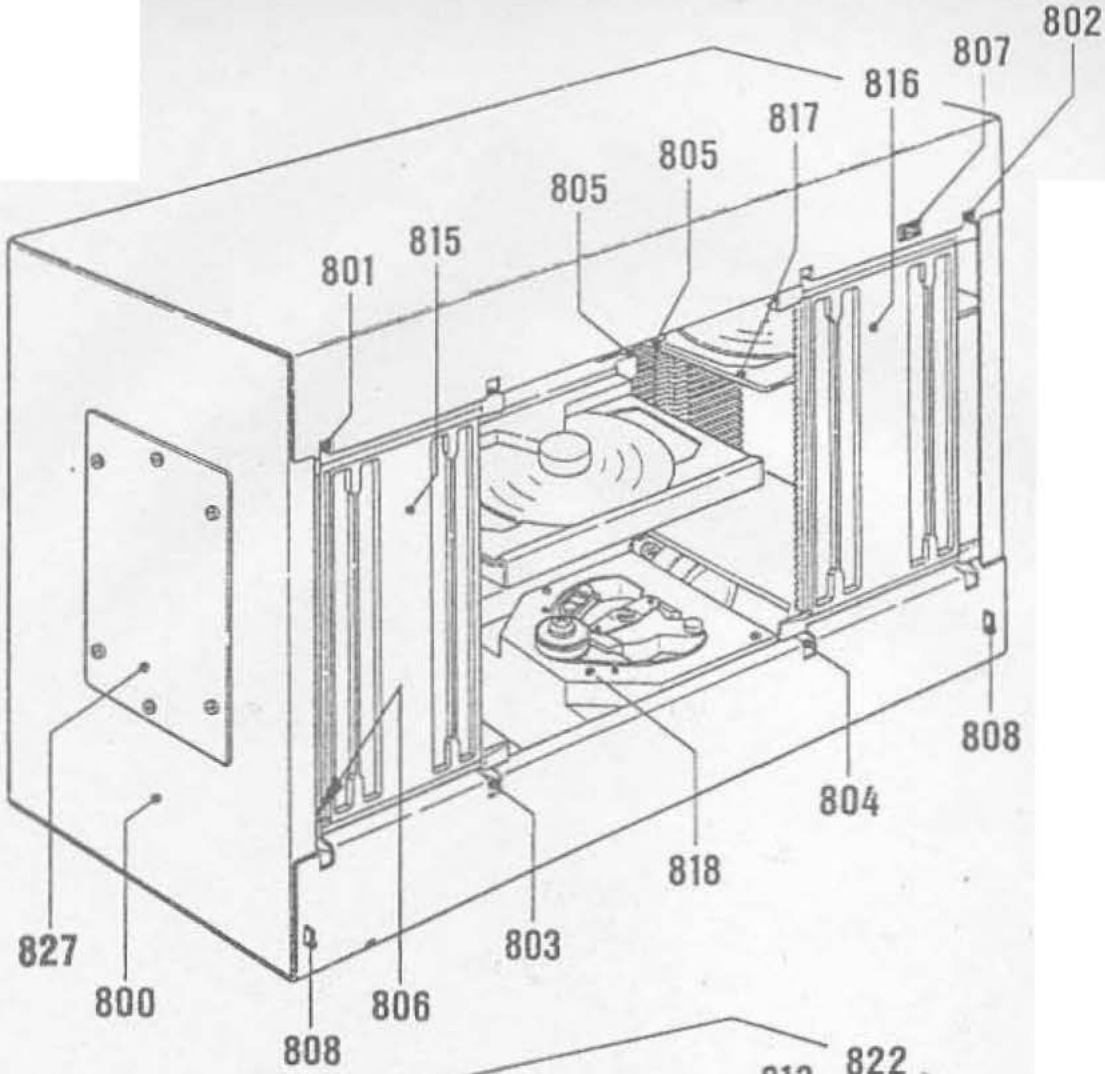
802
807
816
817
805
805
815
801
808
804
818
803
827
800
806
808

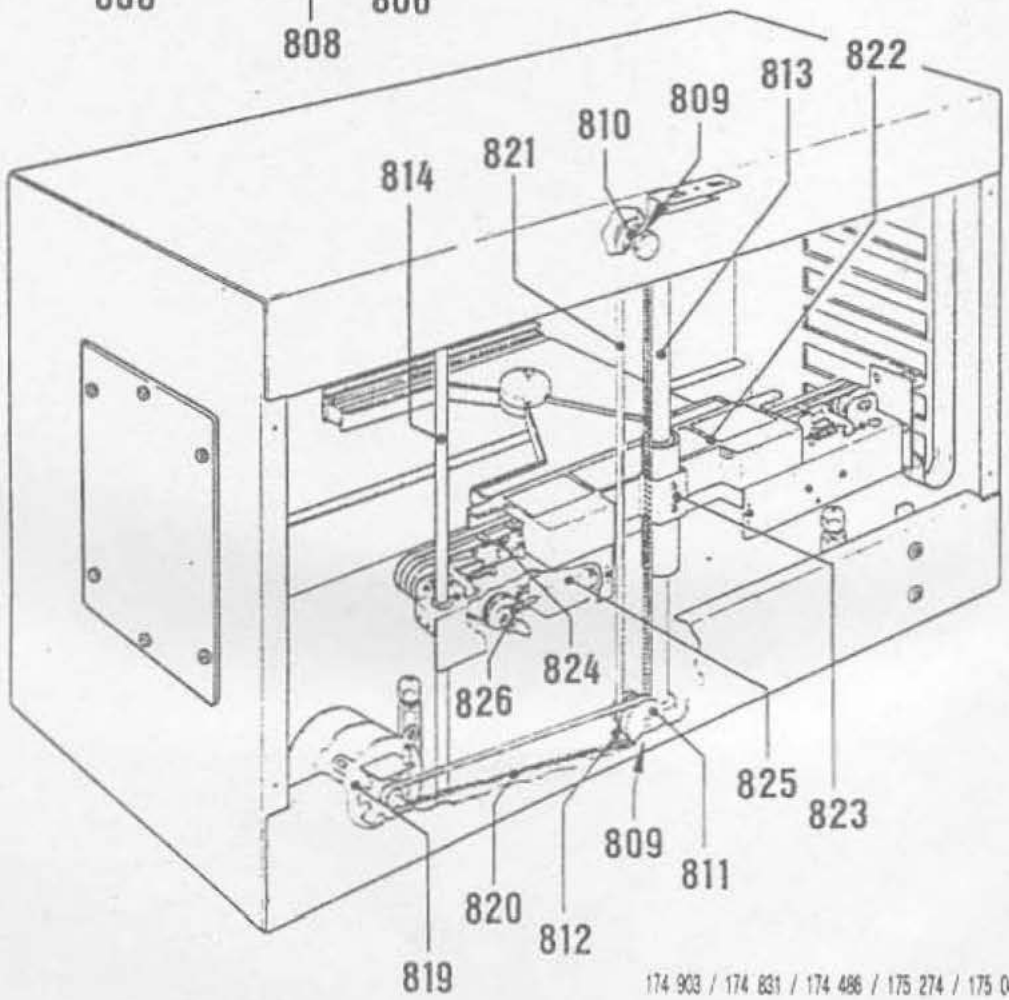
822
813
809
810
821
814
824
826
825
823
809
811
820
812
819

SPARE PARTS LIST

POS.	PART-No.	DESCRIPTION	DATA	QTY
	173 470	CD-CHANGER 100, STANDARD	without design parts without magazines	1
	175 980	CD-CHANGER 100, STANDARD by THE PERFORMER GRAND		1
801	174 296	CLOSING LEDGE, left upper		1
802	174 297	CLOSING LEDGE, right upper		1
803	174 294	CLOSING LEDGE, left lower		1
804	174 295	CLOSING LEDGE, right lower		1
805	173 485	CONTROL KNOB		2
806	206 655	CONNECTION AXLE		2
807	222 531	MICRO SWITCH f. CONNEC. BLOCK	E63-10K	1
808	174 293	FLAT SPRING for VIEW GLASS		2
809	173 538	SCREW SLEEVE, ASSY		2
810	173 522	STEP WHEEL, MOUNTED		1
811	173 521	WASHER 48		1
812	173 526	BOARD WASHER		1
813	173 558	AXLE		1
814	173 559	GUIDE AXLE		1
	174 265	BRIDGE		1
	173 635	LIGHTING, ASSY		1
815	173 491	MAGAZINE LEFT, MOUNTED (without CASSETTE)		1
	209 737	NUMBER STRIP, 01 - 50		2
816	173 499	MAGAZINE RIGHT, MOUNTED (without CASSETTE)		1
	209 779	NUMBER STRIP, 51 - 100		2
817	174 536	CASSETTE CD 120	only 10 piece	
	212 425	TRANSPORT GUIDE for CASSETTE		2
818	173 551	PLAY BACK UNIT, ASSY	with CD-PLAYER	1
819	173 518	STEP MOTOR, ASSY		1
820	206 644	BELT	MXL 195	1
821	206 643	BELT	MXL	1
822	173 607	LIFT, ASSY		1
	206 629	RUBBER RING		1
	209 776	LABEL	NSM 100 CD	1
	174 220	DECOR COVER		1
823	173 614	BELT LOCK		1
824	173 581	LIFT AXLE		1
825	173 606	MOTOR, ASSY		2
826	173 630	GEAR, MOUNTED		2
827	212 548	TRIMPLATE, PRINTED		2
	173 552	CB-CASSETT-CONTROL, ASSY		1
	173 563	CB-STEPPER, ASSY		1
	173 507	CB-DECODER BOARD, ASSY		1
	173 665	CB-PICK UP DRIVER, ASSY		1
	173 510	CB-LIFT ADAPTER, ASSY		1
	173 557	CB-MOTOR-CONTROL, ASSY		2
	173 508	CB-CHANGER ADAPTER, ASSY		1

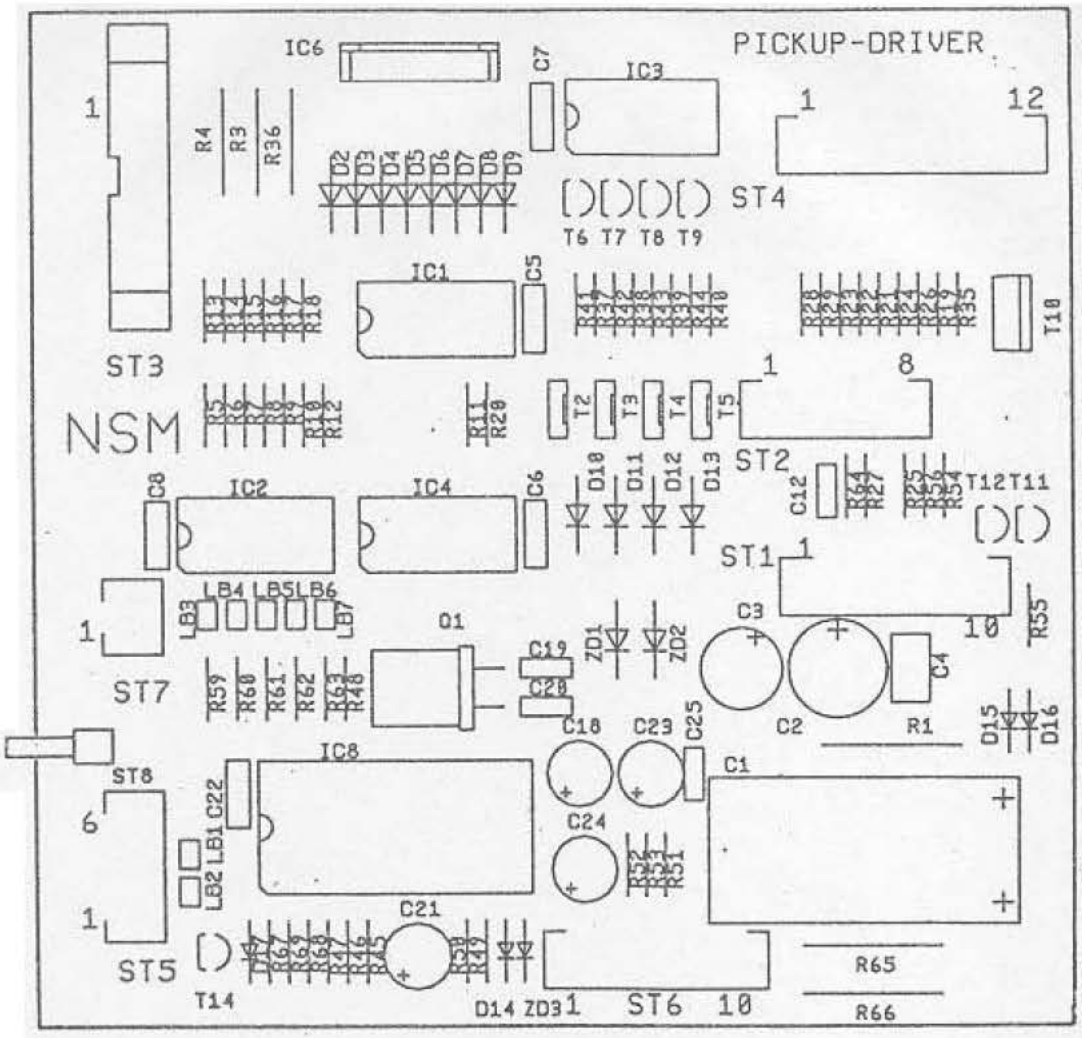
PICKUP-DRIVER
IC6
C7
IC3
ST4
T6 T7 T8 T9
R4
R3
R36
D2 D3 D4 D5 D6 D7 D8 D9
IC1
C5
T18
ST3
NSM
ST2
T2 T3 T4 T5
D10 D11 D12 D13
C12
T12 T11
C8
IC2
IC4
C6
ST1
LB3 LB4 LB5 LB6 LB7
Q1
C19
C20
ZD1
ZD2
C3
C4
R55
ST7
R59 R60 R61 R62 R63 R48
C18
C23
C25
C2
R1
D15
D16
IC8
C1
ST8
C22
LB1 LB2
C24
R52 R51
C21
ST5
T14
D14 ZD3
ST6
R65
R66

SPARE PARTS LIST

POS.	PART-No.	DESCRIPTION		DATA		QTY
	173 665	CB-PICK UP DRIVER, ASSY				1
ST 08	225 392	PIN PLUG		2 prongs 90°		1
ST 03	225 912	PIN PLUG		14 prongs		1
ST 07	225 650	PIN PANEL		2 prongs		1
ST 05	225 850	PIN PANEL		5 prongs		1
ST 02	225 653	PIN PANEL		8 prongs		1
ST 01	225 654	PIN PANEL		10 prongs		1
ST 04	225 655	PIN PANEL		12 prongs		1
Q 1	221 535	OSCILLATOR QUARTZ		4 MHz		1
	222 447	IC-SOCKET		28 prongs		1
IC 8	231 409	IC-MICROCOMPUTER	T 018	MAB 8441		1
IC 6	231 303	IC-LINEAR		L 298		1
IC 3, 4	221 771	IC-CMOS		HEF 4094 B		2
IC 1, 2	221 763	IC-CMOS		HEF 4021 B		2
D14-16, 17	221 114	SI-DIODE		1 N 4148		4
D 2-13	221 822	SI-DIODE		BA 157		12
D 18, 19	221 115	SI-DIODE		1 N 4004		2
ZD 1, 2	231 326	ZENER-DIODE		ZY 24		2
T 11, 14	221 283	SI-TRANSISTOR		BC 212 B		2
T 6-9, 12	221 757	SI-TRANSISTOR		BC 547 B		5
T 2-5	221 777	SI-TRANSISTOR		BD 679		4
T 10	231 150	SI-TRANSISTOR		TIP 130		1
C 19, 20	220 266	CER.-CAPACITOR		27 pF		2
C 12	220 342	CER.-CAPACITOR		100 pF		1
C 5-8, 22	220 334	MKT-CAPACITOR		0,1 µF	63 V	5
C 4	220 332	MKT-CAPACITOR		0,33 µF	63 V	1
C 21	220 249	LYTIC		1 µF	63 V	1
C 18	220 389	LYTIC		47 µF	10 V	1
C 3	220 160	LYTIC		100 µF	10 V	1
C 2	220 391	LYTIC		220 µF	25 V	1
C 1	220 165	LYTIC		470 µF	40 V	1
R 64	221 606	RESISTOR		47 Ω	¼ W	1
R 25, 54	221 600	RESISTOR		100 Ω	¼ W	2
R 35	221 632	RESISTOR		160 Ω	¼ W	1
R 37-40	221 614	RESISTOR		330 Ω	¼ W	4
R 56, 57	221 099	RESISTOR		470 Ω	¼ W	2
R 45, 49	221 029	RESISTOR		1 kΩ	¼ W	2
R 27-29	221 033	RESISTOR		3,3 kΩ	¼ W	3
R 46, 47	221 034	RESISTOR		4,7 kΩ	¼ W	2
R 26, 41-44, 68, 69	221 035	RESISTOR		10 kΩ	¼ W	7
R 5-12	221 603	RESISTOR		12 kΩ	¼ W	8
R 13-20, 55	221 036	RESISTOR		15 kΩ	¼ W	9
R 21-23, 59-63	221 604	RESISTOR		22 kΩ	¼ W	8
R 24	221 048	RESISTOR		100 kΩ	¼ W	1
R 48	221 009	RESISTOR		1 MΩ	¼ W	1
R 3	221 392	RESISTOR		390 Ω	½ W	1
R1, 36, 65	221 692	WIRE WOUND RESISTOR		1 Ω	1 W	3
R 66	231 418	WIRE WOUND RESISTOR		2,7 Ω	1 W	1

SPARE PARTS LIST

POS.	PART-No.	DESCRIPTION	DATA	QTY
	173 508	CB-CHANGER ADAPTER, ASSY		1
ST 3	225 418	PIN PLUG	4 prongs	1
ST 2	225 412	PIN PLUG	4 prongs 90°	1
ST 12	225 660	PIN PANEL	2 prongs 90°	1
ST 1	225 661	PIN PANEL	4 prongs 90°	1
ST 9	225 652	PIN PANEL	6 prongs	1
ST 10	225 662	PIN PANEL	6 prongs 90°	1
ST 7, 11	225 653	PIN PANEL	8 prongs	2
ST 6	225 663	PIN PANEL	8 prongs 90°	1
ST 5	225 654	PIN PANEL	10 prongs	1
ST 4	225 664	PIN PANEL	10 prongs 90°	1
ST 8	225 655	PIN PANEL	12 prongs	1

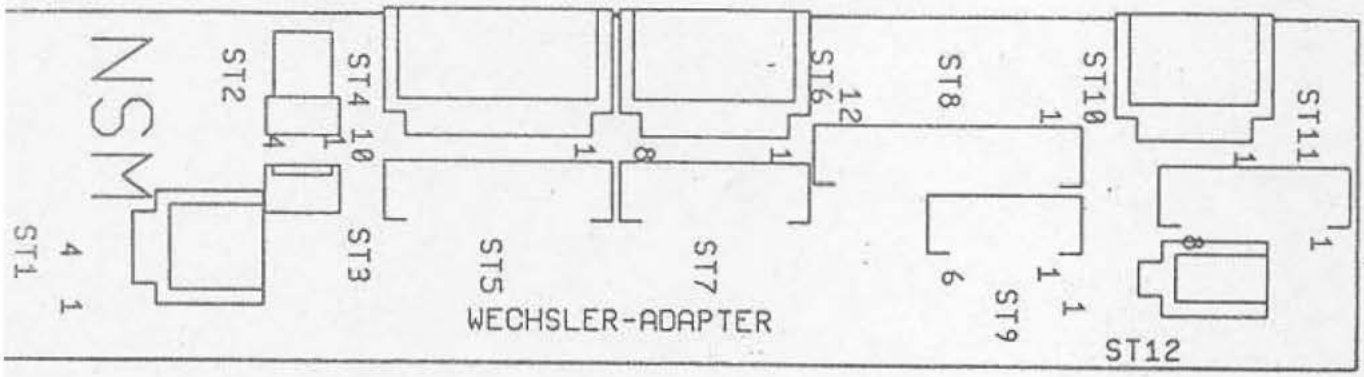

SPARE PARTS LIST

POS.	PART-No.	DESCRIPTION	DATA	QTY
	173 510	CB-LIFT ADAPTER, ASSY		1
ST 2	225 892	PLUG	14 prongs	1
ST 1	222 445	IC-SOCKET	16 prongs	1
OPEND	231 322	OPTO-COUPLER	LTH-301	1

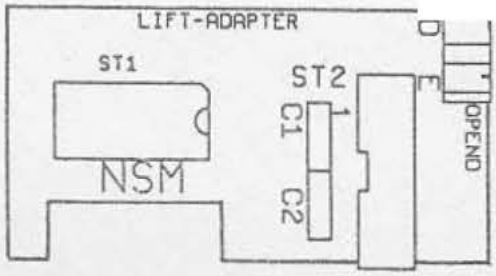

SPARE PARTS LIST

POS.	PART-No.	DESCRIPTION	DATA	QTY
	173 563	CB-STEPPER, ASSY		1
	231 322	OPTO-COUPLER	LTH-301	1
	112 464	CABLE HARNESS	4 prongs	1
	173 557	CB-MOTORCONTROL, ASSY		1
	231 322	OPTO-COUPLER	LTH-301	1

SPARE PARTS LIST

POS.	PART-No.	DESCRIPTION	DATA	QTY
	173 636	CABLE HARNESS: LIFT		1
	173 639	CABLE HARNESS: PICK UP - CABLE I		1
	173 641	CABLE HARNESS: PICK UP - CABLE II		1
	173 644	CABLE HARNESS: TRAILING CABLE		1
	151 645	CABLE HARNESS: DECODER CABLE I		1
	173 646	CABLE HARNESS: DECODER CABLE II		1
	173 647	CABLE HARNESS: DRIVER CABLE I		1
	173 648	CABLE HARNESS: DRIVER CABLE II		1
	173 649	CABLE HARNESS: DRIVER CABLE III		1
	173 740	CABLE HARNESS: NF - CABLE		1
	174 185	CABLE HARNESS: SWITCH		1

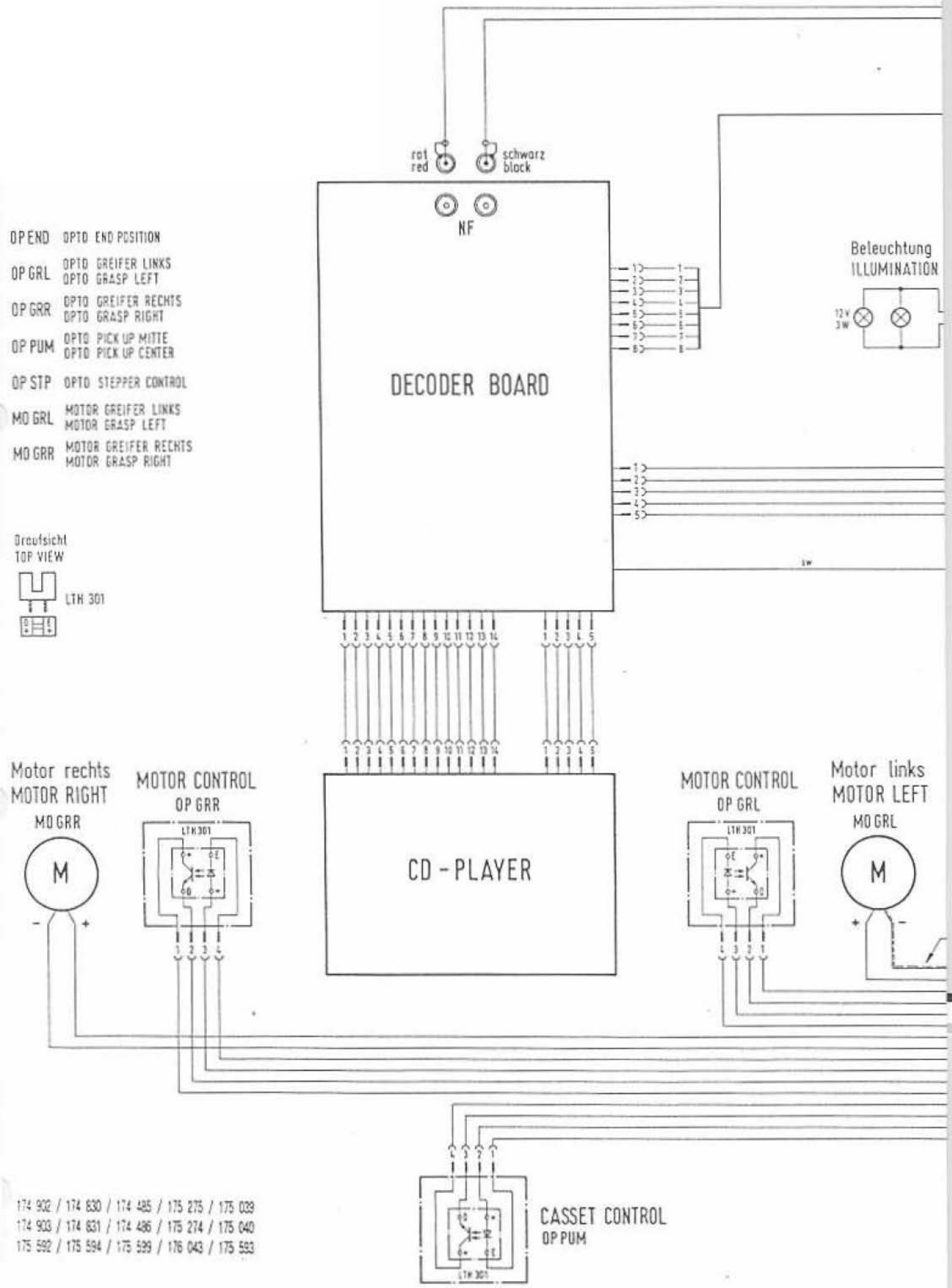
rot
red
schwarz
black
NF
DECODER BOARD
Beleuchtung
ILLUMINATION
12V
3W
OP END OPTO END POSITION
OP GRL OPTO GREIFER LINKS
OPTO GRASP LEFT
OP GRR OPTO GREIFER RECHTS
OPTO GRASP RIGHT
OP PUM OPTO PICK UP MITTE
OPTO PICK UP CENTER
OP STP OPTO STEPPER CONTROL
MO GRL MOTOR GREIFER LINKS
MOTOR GRASP LEFT
MO GRR MOTOR GREIFER RECHTS
MOTOR GRASP RIGHT
Draufsicht
TOP VIEW
LTH 301
Motor rechts
MOTOR RIGHT
MO GRR
M
MOTOR CONTROL
OP GRR
LTH 301
CD - PLAYER
MOTOR CONTROL
OP GRL
LTH 301
Motor links
MOTOR LEFT
MO GRL
M
CASSET CONTROL
OP PUM
LTH 301
174 902 / 174 830 / 174 485 / 175 275 / 175 039
174 903 / 174 831 / 174 486 / 175 274 / 175 040
175 592 / 175 594 / 175 599 / 176 043 / 175 593

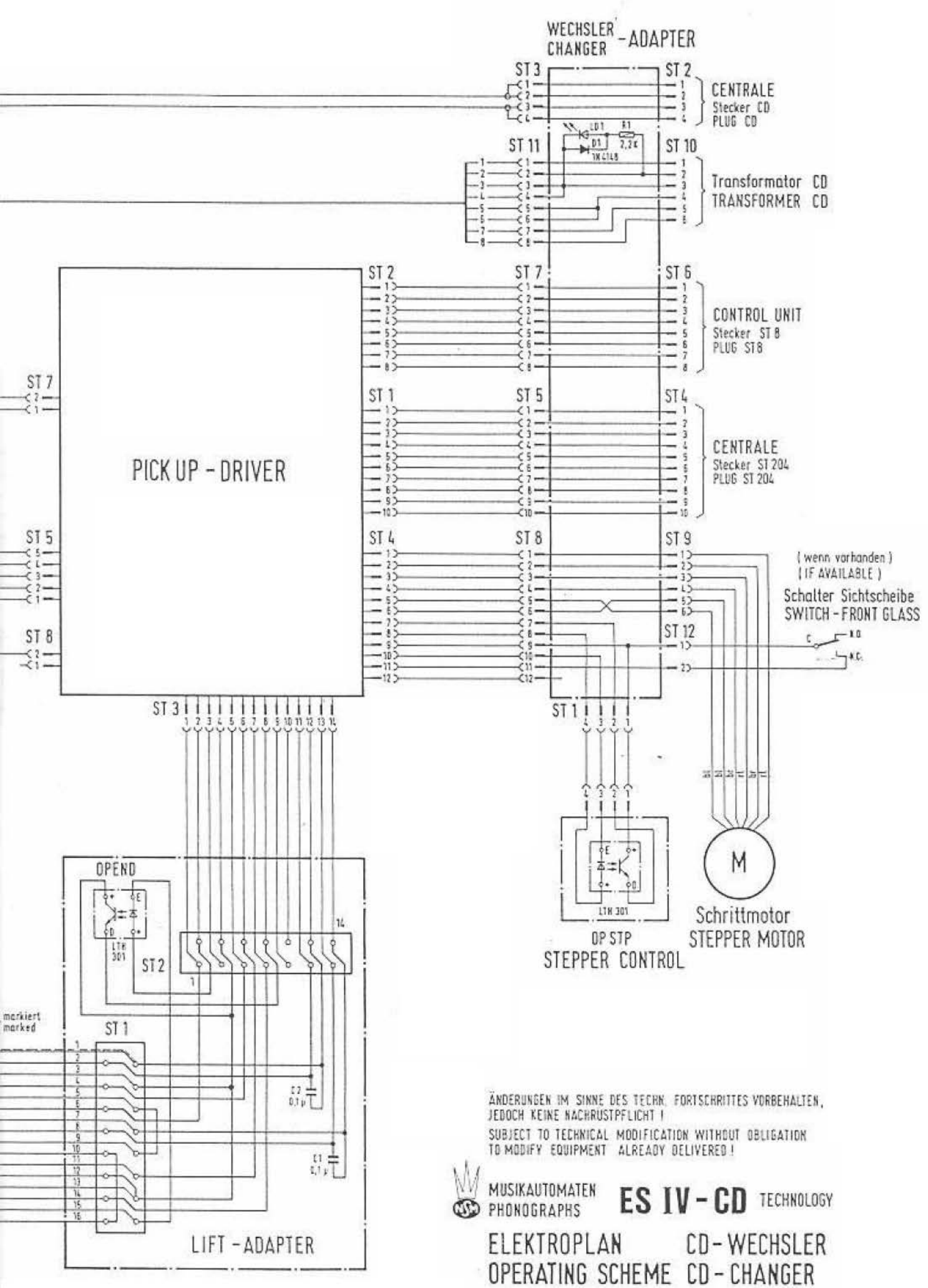
WECHSLER CHANGER - ADAPTER
ST 3
ST 2
CENTRALE
Stecker CD
PLUG CD
LD1
R1
D1
1N 4148
2,2k
ST 11
ST 10
Transformator CD
TRANSFORMER CD
ST 2
ST 7
ST 6
CONTROL UNIT
Stecker ST 8
PLUG ST 8
ST 7
PICK UP - DRIVER
ST 1
ST 5
ST 4
CENTRALE
Stecker ST 204
PLUG ST 204
ST 5
ST 4
ST 8
ST 9
(wenn vorhanden)
(IF AVAILABLE)
Schalter Sichtscheibe
SWITCH - FRONT GLASS
ST 8
ST 12
C
N.O.
N.C.
ST 3
ST 1
OPEND
LTH 301
ST 2
14
1
markiert
marked
ST 1
C2
0,1 µ
C1
0,1 µ
LIFT - ADAPTER
LTH 301
OP STP
STEPPER CONTROL
M
Schrittmotor
STEPPER MOTOR
ÄNDERUNGEN IM SINNE DES TECHN. FORTSCHRITTES VORBEHALTEN,
JEDOCH KEINE NACHRUSTPFLICHT !
SUBJECT TO TECHNICAL MODIFICATION WITHOUT OBLIGATION
TO MODIFY EQUIPMENT ALREADY DELIVERED !
MUSIKAUTOMATEN
PHONOGRAPHS
ES IV - CD TECHNOLOGY
ELEKTROPLAN CD - WECHSLER
OPERATING SCHEME CD - CHANGER
Dat. 06.02.91
Gez. Braun
Bearb.
Gepr.