ROCK-OLA

SERVICE MANUAL

FOR PHONOGRAPH MODEL 1422

An Explanation with Illustrations

of the

OPERATION, DESCRIPTION OF PARTS AND ADJUSTMENT OF THE VARIOUS ASSEMBLIES

Also, a useful

LISTING OF PARTS BY ASSEMBLIES AND LISTING OF PARTS—NUMERICALLY

ROCK-OLA MANUFACTURING CORPORATION

800 NORTH KEDZIE AVENUE • CHICAGO 51, ILLINOIS, U. S. A.

Foreword

In the preparation of this manual extensive research work was necessary in order to cover every phase of operation of Rock-Ola equipment. This manual was planned by the Service Department to present the service man with a guide so that he may better understand and maintain the Rock-Ola phonograph and to present this material as briefly and clearly as possible.

In order to achieve this end a concise outline of the cycle of operation is given, citing only essential operations. This outline is then enlarged upon in the discussion of the operation of the parts and necessary adjustments.

Pictures, accompanied by pertinent information, part numbers and descriptions, are woven into this discussion in order to alleviate any unnecessary effort on the reader's part.

We hope that in presenting the manual in this manner, the service man may find the answer to his problem with a minimum of time and effort.

Your comments and suggestions toward the improvement of this manual will be appreciated.

Rock-Ola maintains a distributor in every part of the country for your convenience. Your distributor has a complete parts and service organization which will give prompt attention to all your problems. This affords an efficient method of handling your requirements and cuts down the tremendous transportation costs, as bulk shipments can be made to the distributor and needless delays will be avoided.

It is important that the serial number of the phonograph be given when ordering parts or requesting information. Use part numbers and the proper description for all references. When outlining a problem, give a full report, the slightest detail may be most important.

TABLE OF CONTENTS

SECTION I—OPERATION AND ADJUSTMENTS

SECTION II—PARTS LISTING

SECTION III—WIRING DIAGRAM

ILLUSTRATIONS

ROCK-OLA

MODEL 1428

INSTALLATION MANUAL

800 N. KEDZIE AVE., CHICAGO 51, ILLINOIS

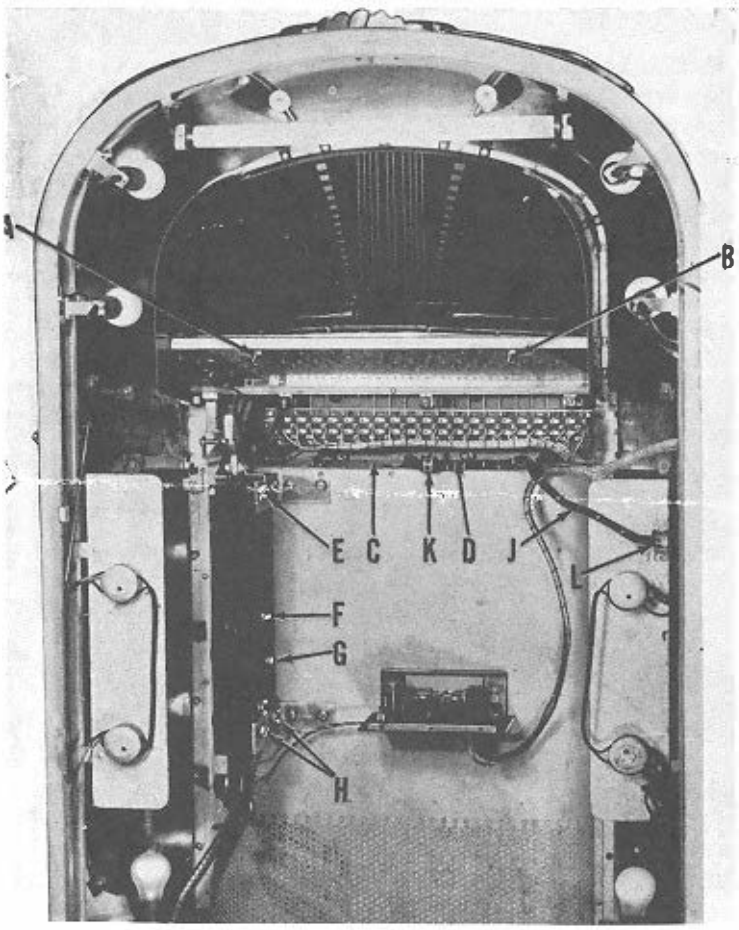

Fig. 1 – Inside Front Door

110 LINE CORD

Check location power supply before plugging in phonograph to make certain output matches with electrical requirements stamped on serial plate affixed to rear door of phonograph.

POWER AND LIGHT SWITCHES

1. Master line switch (*C–Fig. 3*).
   To the left–ON.
   To the right–OFF.

2. Cabinet light switch (*D–Fig. 3*).
   To the left–On with selections only.
   To the right–On all the time.

TUBES, CONDENSERS, AND PLUGS

1. Make sure that tubes and plug-in condensers in amplifier are tight in sockets (*H–Fig. 2*).

2. Check plugs on electrical distribution panel (*J–Fig. 2*) to make certain all are tight in sockets.

3. At no time should tubes or condensers be removed from the amplifier while the phonograph is on.

TONE AND VOLUME CONTROLS

1. Treble and bass controls easily adjust amplifier tone for individual locations (*G–Fig. 2*).

2. Volume adjusted by inserting volume control key in slotted shaft in metal rimmed depression on right outside of cabinet.

13308 11-47 5M

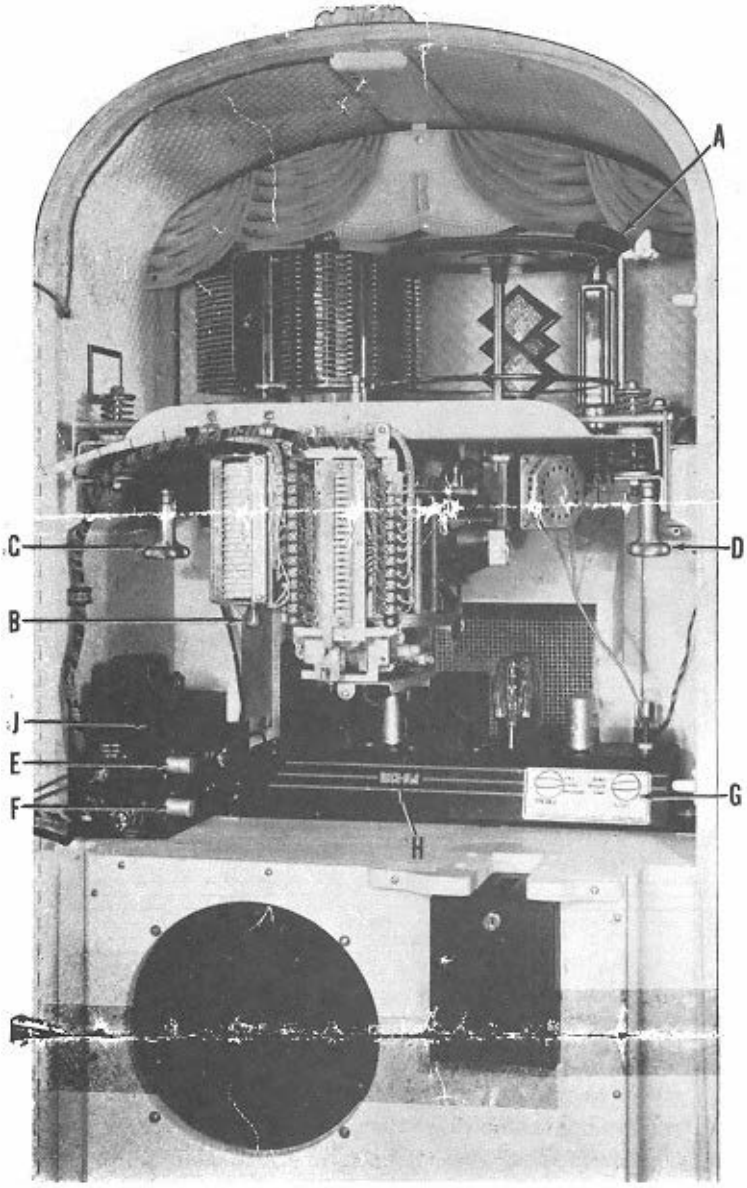

Fig. 2 – Interior Front View

ELECTRICAL DISTRIBUTION PANEL

Electrical distribution panel distributes power to all parts of the phonograph. Complete instructions are inscribed on the unit. The terminal strips are for hookup of wall and bar boxes. (*Instructions for hook-up of Rock-Ola five wire remote control to this unit drawing No. 11465 furnished upon request*).

15 watt fluorescent starter (*E–Fig. 2*) for inside front door fluorescent light.

20 watt fluorescent starter (*F–Fig. 2*) for Magic-Glo fluorescent light.

3 amp. fustat (*A–Fig. 3*) for 24 volt system, coin mechanism, remote control.

5 amp. fustat (*B–Fig 3*) for lights.

10 amp. fuse (*E–Fig. 3*) for 110 volt master line.

3 amp. fuse (*110 volt*) (*F–Fig. 3*) for amplifier.

INSTALLING TITLE STRIPS

1. Program panel snaps out by unlocking two springclips (*A and B–Fig. 1*).
2. Title strips are inserted by slipping into guides on program panel.

INSTALLING NEEDLE

1. Loosen thumb screw on tone arm (*A–Fig. 2*).
2. Insert needle in as far as possible with flat side of shank to the front.
3. Tighten screw.

RESETTING RECORD PLAY COUNTER

1. Push in bar (*B–Fig. 2*).
2. Twist knob to right.
3. Release bar.

MECHANISM ANCHOR LOCKS

Unscrew large wing nuts (*C and D–FIG. 2*) on each side until fully extended. If these nuts are not unscrewed before operating phonograph, an acoustic howl will result. (*Always clamp mechanism when transporting phonograph*).

MAGIC-GLO PANEL AND COLOR CYLINDER

1. To remove panel–loosen (*do not remove*) two screws located under twenty key switch bank between (*C and D–Fig. 1*) and remove third screw centered above.
2. Raise metal cap and Magic-Glo panel (*A and F–Fig. 4*) upward until screws in metal cap touch top of slots (*D and E–Fig. 4*).
3. Lift cap and panel away from door.
4. To remove color cylinder–unhook cord (*J–Fig. 1*) from clamps (*K and L–Fig. 1*).
5. Remove bracket screw from threaded hole (*B–Fig. 4*).
6. Grasp bracket and color cylinder lifting upward and outward so that upper edge of cylinder clears top of panel recess.
7. Hold bracket and slip cylinder off from lower end of assembly.
8. To install cylinder and panel–reverse above procedure.

INSTALLING RECORDS

1. Pull out tray release bar (*A–Fig. 5*).
2. Unhook tray unlocking dog (*B–Fig. 5*) to bring tray from stack.
3. Place records on support discs in tray (*discs must be felt side up*).
4. Return tray to stack, making sure dog locks are in place.
5. When record servicing is completed return release bar to closed position.

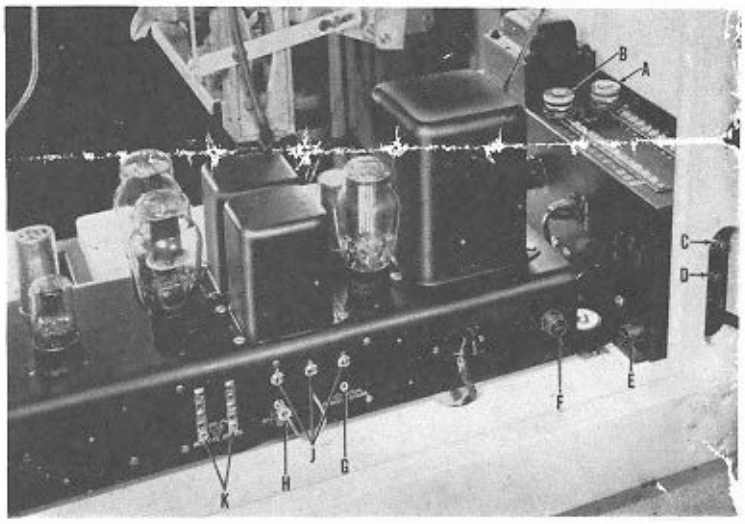

Fig. 3 – Inside Rear Door

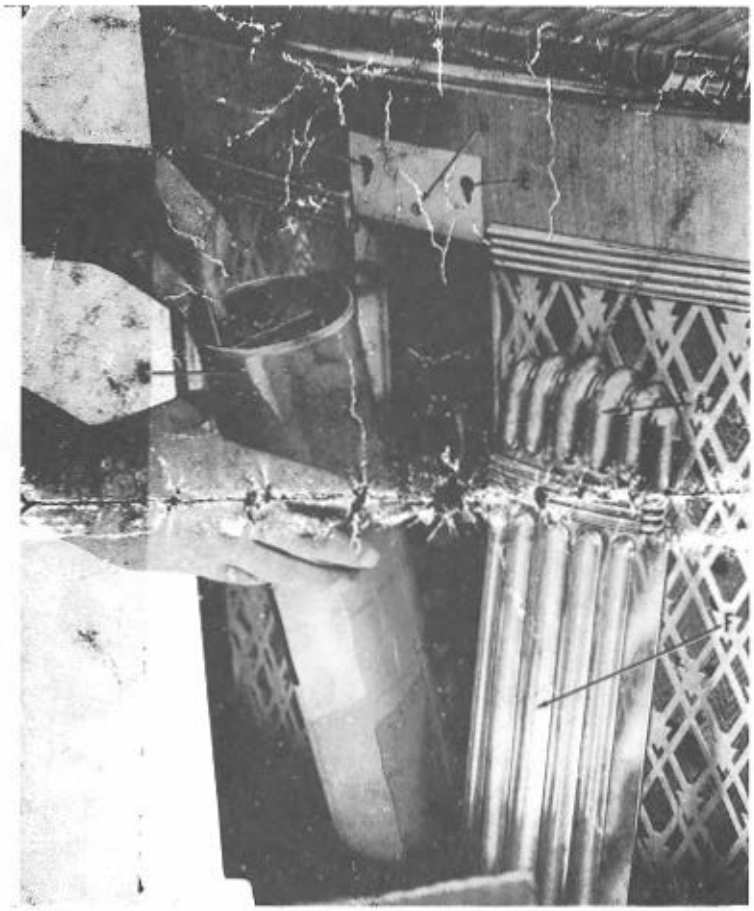

Fig. 4 – Magic-Glo Panel

SLUG REJECTOR

1. Make certain phonograph is level.
2. Check spirit level (*C–Fig. 6*). Adjustment made by loosening wing nuts (*E and H–Fig. 1*) and moving rejector unit back or forth until bubble in spirit level is centered between two marking points. Tighten nuts after adjustment is completed.
3. Slug rejector should be cleaned once a month. To clean–swing parts (*A, B and C–Fig. 7*) away from unit. Use small, soft bristle brush and carbon tetrachloride for cleaning. Never use cloth as lint may clog unit. Always protect slug rejector when cleaning or repairing as magnets will attract small filings, screws, nuts, etc. Never lubricate slug rejector.
4. To remove slug rejector–remove hexagon nuts (*A and B–Fig. 6*). Raise unit upward then slip forward, making certain that slot at lower right hand corner clears tongue of drop switch.

SAFETY SWITCH

1. Toggle switch, located on front left side of chassis is for service–stops mechanism at any point of operation.

DROP SWITCH

NOTE:

For six plays for 25¢, install assembly No. 13101 at (*D–Fig. 6*).

For 1 play for 10¢, three plays for 25¢, remove wires (*E and F–Fig 6*). For modification of slug rejector (to reject five cent coins), drawing No. 12694 furnished upon request.

To remove:

1. Remove wing nut (*G–Fig. 1*) and thumb screw (*F–Fig. 1*).
2. Lower drop switch so that tongue clears slot of slug rejector and slip unit out.

POWER MOTOR BELT

1. Belt should not be tight–just enough to drive the mechanism.
2. To adjust, loosen two or four machine bolts (*depending on model*) that fasten motor to chassis.
3. If two machine bolts are used–adjust screw that turns against upper left part of motor casting until light tension is obtained.
4. If four machine bolts are used–move motor in elongated slots of motor housing until light tension is obtained.
5. Tighten bolts.
6. Use Rock-Ola V-type belt only (*No. 10651*).
7. Keep belt free from oil and grease.

INSTALLATION OF REMOTE SPEAKERS

Amplifier Model P is designed for the addition of one to four remote speakers. The system requires the use of a 500 ohm line to 8 ohm voice coil matching transformer for *each* remote speaker where the speakers are located a considerable distance from the phonograph and from each other. This installation is explained in detail under "Procedure 1". Whenever an installation has two remote speakers located within 20 feet of each other, both speakers may be connected in parallel to one common matching transformer. This is explained in detail under "Procedure 2". The matching transformer which must be located in the remote speaker housing, connects the 500 ohm line from the amplifier to the speaker.

1. Procedure 1. – This method should be used on all remote speaker installations where the speakers are located a considerable distance from the phonograph and more than 20 feet from each other. A matching transformer is required for each remote speaker that is used.

   A. Run a two-wire line from the phonograph to all the remote speaker-transformer units. For convenience, several branch lines may be run from the phonograph to the individual speaker-transformer units, or a line may be run from the phonograph to the first remote unit, from there to the second remote unit, etc. The installation will suggest the most convenient arrangement.

   B. Connect the two-wire line to the terminals labeled "500 ohm line to remote speakers" on the amplifier terminal board (*K–Fig. 3*).

   C. Move the jack plug (*H–Fig. 3*) on the amplifier terminal board from the "Local Speaker Only" position to the "Additional Remote Speakers" position (*G–Fig. 3*).

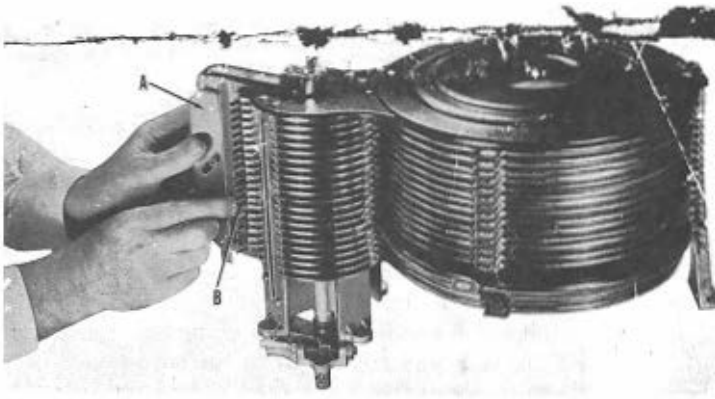

Fig. 5 – Tray Stack Assembly

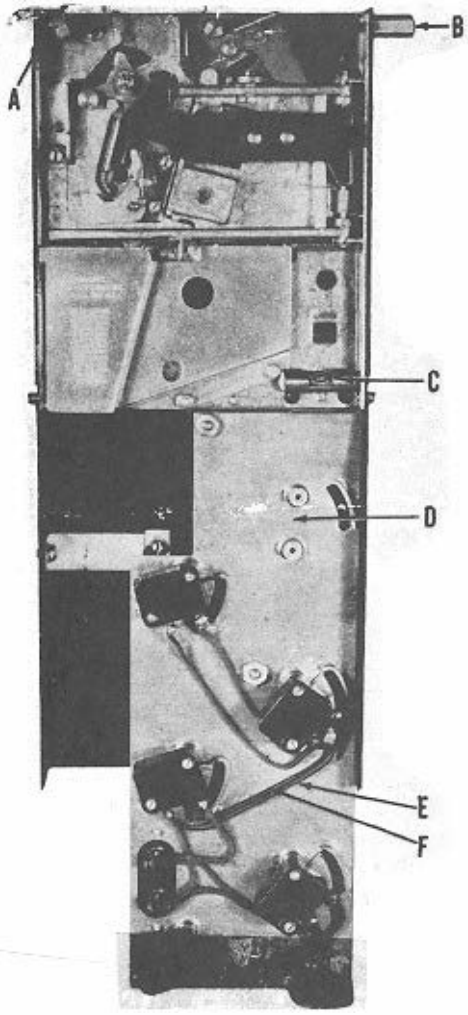

Fig. 6 – Slug Rejector Assembly

D. Connect each of the two terminals labeled 500 on the matching transformers in the remote unit to each side of the two-wire line. Do this for all the remote speaker units to be installed.

E. Connect the speaker voice coil leads to their respective transformers in the following manner:

(1) IF ONE (1) REMOTE UNIT IS USED– Connect the speaker voice coil leads to the matching transformer taps labeled "Common" and "No. 1".

(2) IF TWO (2) REMOTE UNITS ARE USED– Connect each set of speaker voice coil leads to taps labeled "Common" and "No. 2" on each of their respective matching transformers.

(3) IF THREE (3) REMOTE UNITS ARE USED– Connect each of the speaker voice coil leads to taps labeled "Common" and "No. 3" on each of their respective matching transformers.

(4) IF FOUR (4) REMOTE UNITS ARE USED– Connect each set of speaker voice coil leads to taps labeled "Common" and "No. 4" on each of their respective matching transformers.

2. Procedure 2.–Wherever an installation has two remote speakers located close to each other, both speakers may be connected in parallel to one matching transformer, HOWEVER, this only applies when the *wire length* between these speakers does not exceed 20 feet and the wire size used is no smaller than No. 18 (B & S Gauge). The procedure for installation is as follows:

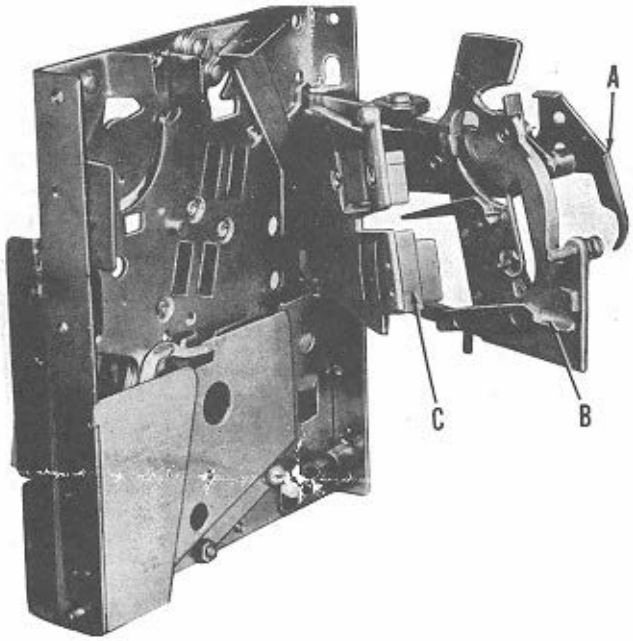

Fig. 7 – Slug Rejector

A. Run a two-wire line from the phonograph to all remote matching transformers.

B. Connect the two-wire line to the terminal labeled "500 ohm line to remote speakers" on the amplifier terminal board (*K–Fig. 3*).

C. Move the jack plug on the amplifier terminal board from the "Local Speaker Only" (*H–Fig. 3*) to the "Additional Remote Speakers" (*G–Fig 3*) position.

D. Connect each of the two terminals labeled 500 on the matching transformers in the remote units to each side of the two-wire line.

E. Connect the speaker voice coil leads to their respective transformers in the following manner:

(1) IF TWO (2) REMOTE SPEAKERS ARE USED– Connect the speaker voice coil leads to the matching transformer taps labeled "Common" and "No. 2".

(2) IF THREE (3) REMOTE SPEAKERS ARE USED– Connect the speaker voice coil leads to the matching transformer taps labeled "Common" and "No. 3".

(3) IF FOUR (4) REMOTE SPEAKERS ARE USED– Connect the speaker voice coil leads to the matching transformer taps labeled "Common" and "No. 4".

A good rule to remember is that the voice coils *always* connect to "Common" and the tap which has the same number as the *total number of remote speakers* used, regardless of the number of transformers employed.

3. "L" PAD FOR SEPARATE CONTROL OF LOCAL SPEAKER– The volume of the local speaker may be controlled without affecting the level of the remote speakers by means of the "L" pad (Purchase optional) which is attached by removing the jumper connection at (*J–Fig. 3*) and connecting to contact screws A, B, and C (*J–Fig. 3*) on the amplifier terminal board. The jumper must be replaced when the "L" pad is not used.

AMCH-DLA MODEL 1422 PHONOGRAPH SCHEMATIC DIAGRAM

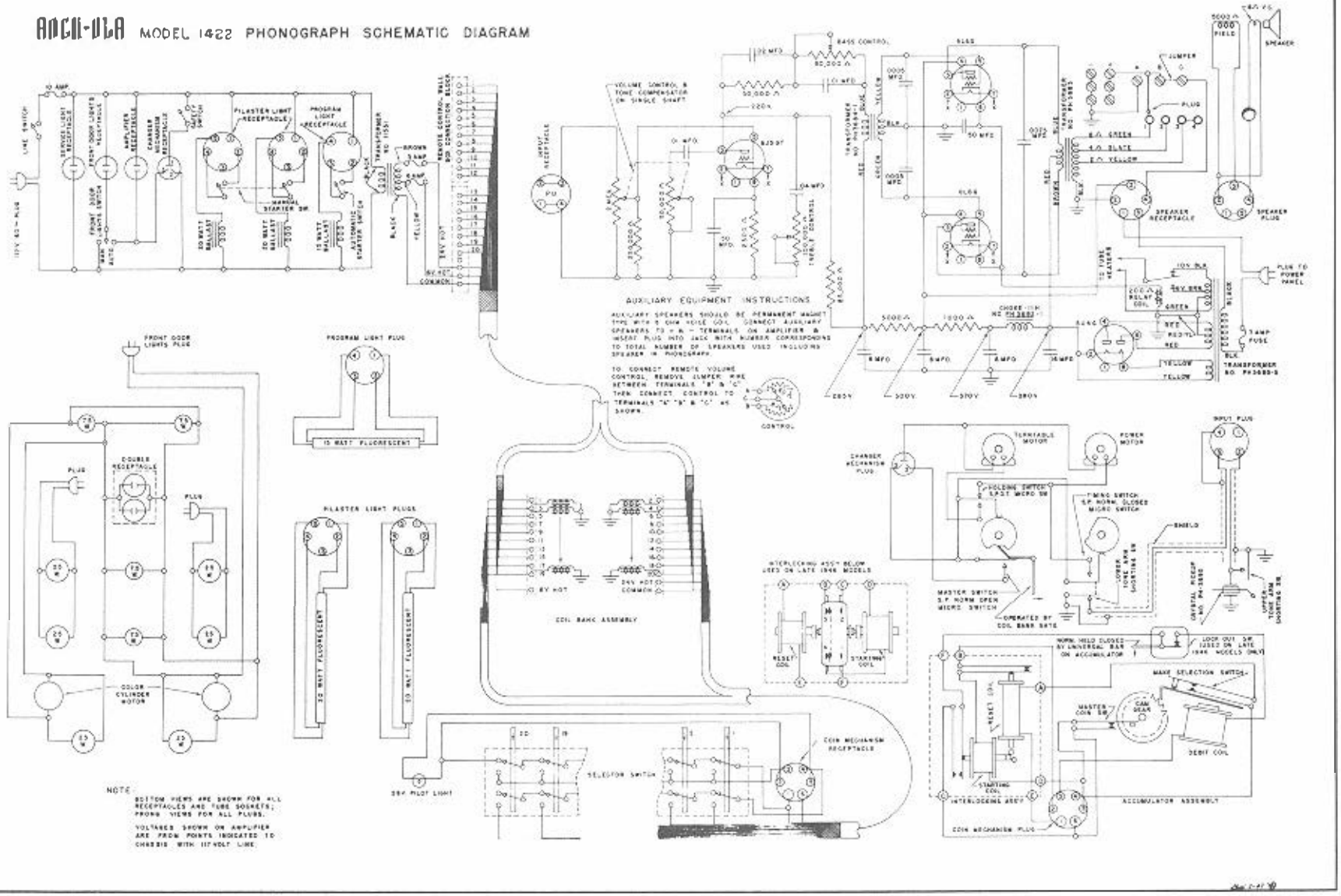

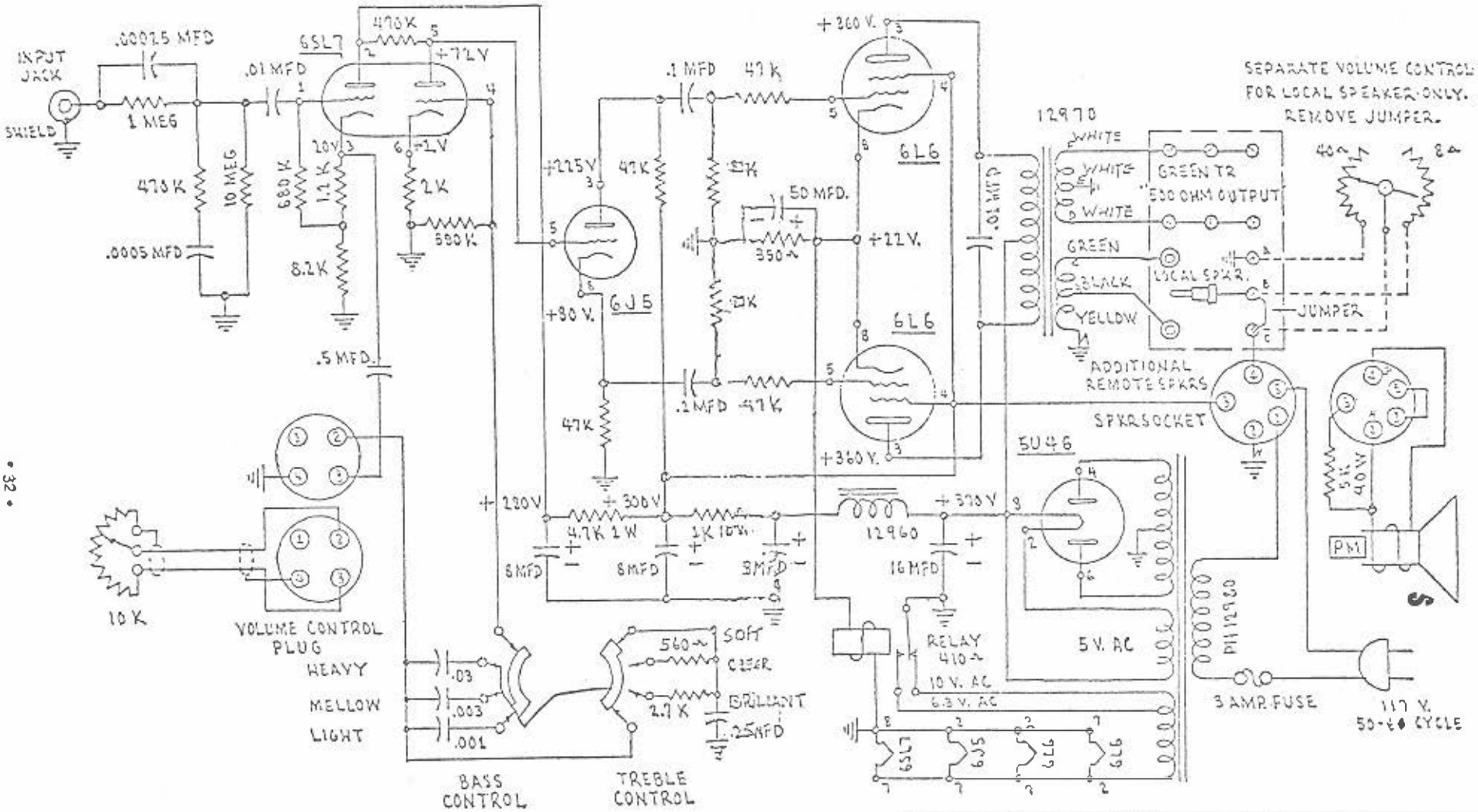

FINISH	MATERIAL	SYM.	NO. OF PART	ITEM	NAME OF PART
					AMPLIFIER SCHEMAT MODEL (P)
Tolerance of ±.005 inches on decimal and ±.015 inches on fractional dimensions is allowed unless otherwise specified. Screw threads are to be U. S. S. and a No. 2 fit unless otherwise specified.					
DO NOT SCALE			ROCK-OLA MFG. CORP. CHICAGO • ILLINOIS		NUMBER 13306

FRONT DOOR ASSEMBLY

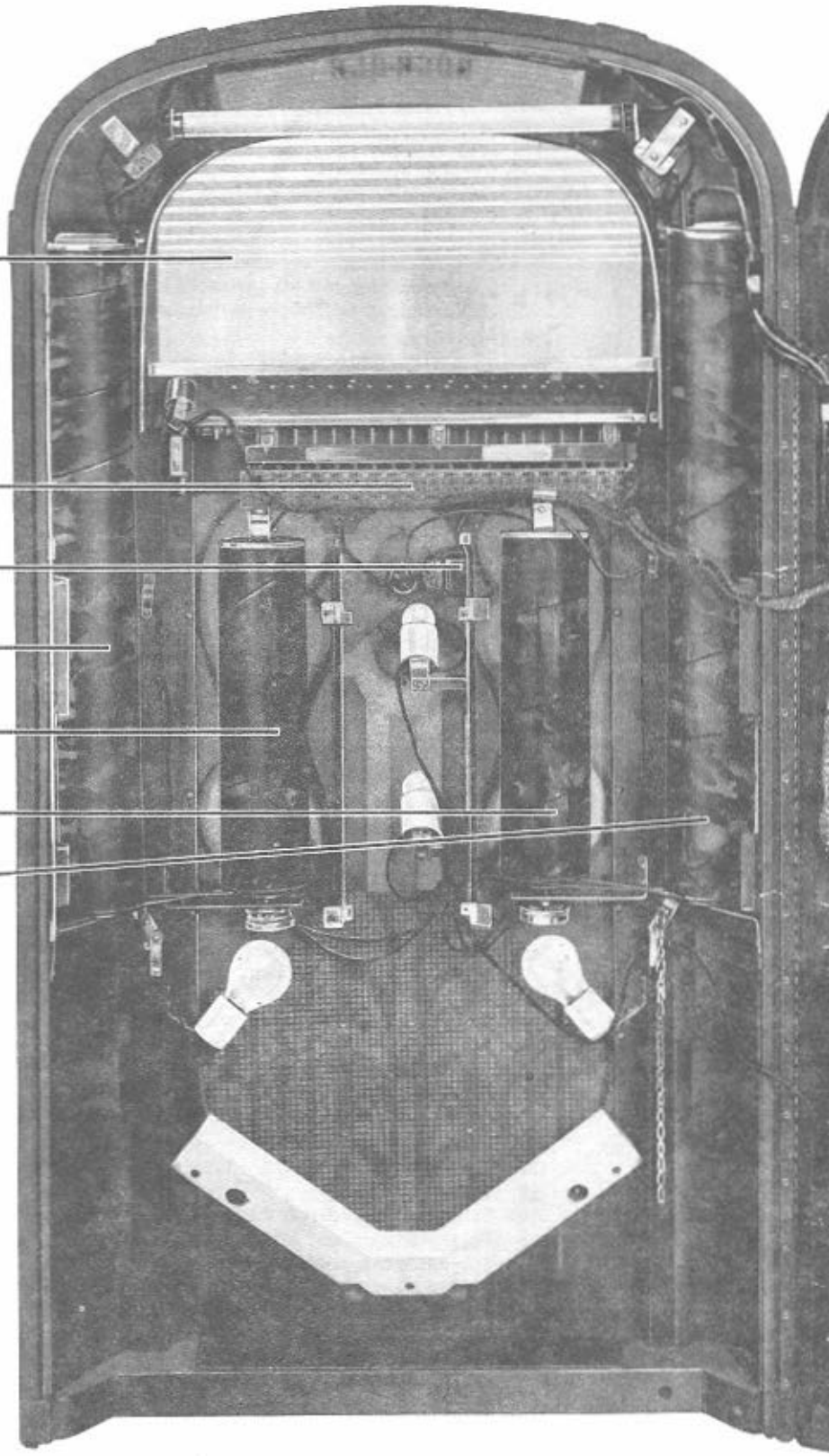

Fig. 1—Front Door Assembly

PHONOGRAPH *(Interior View)*

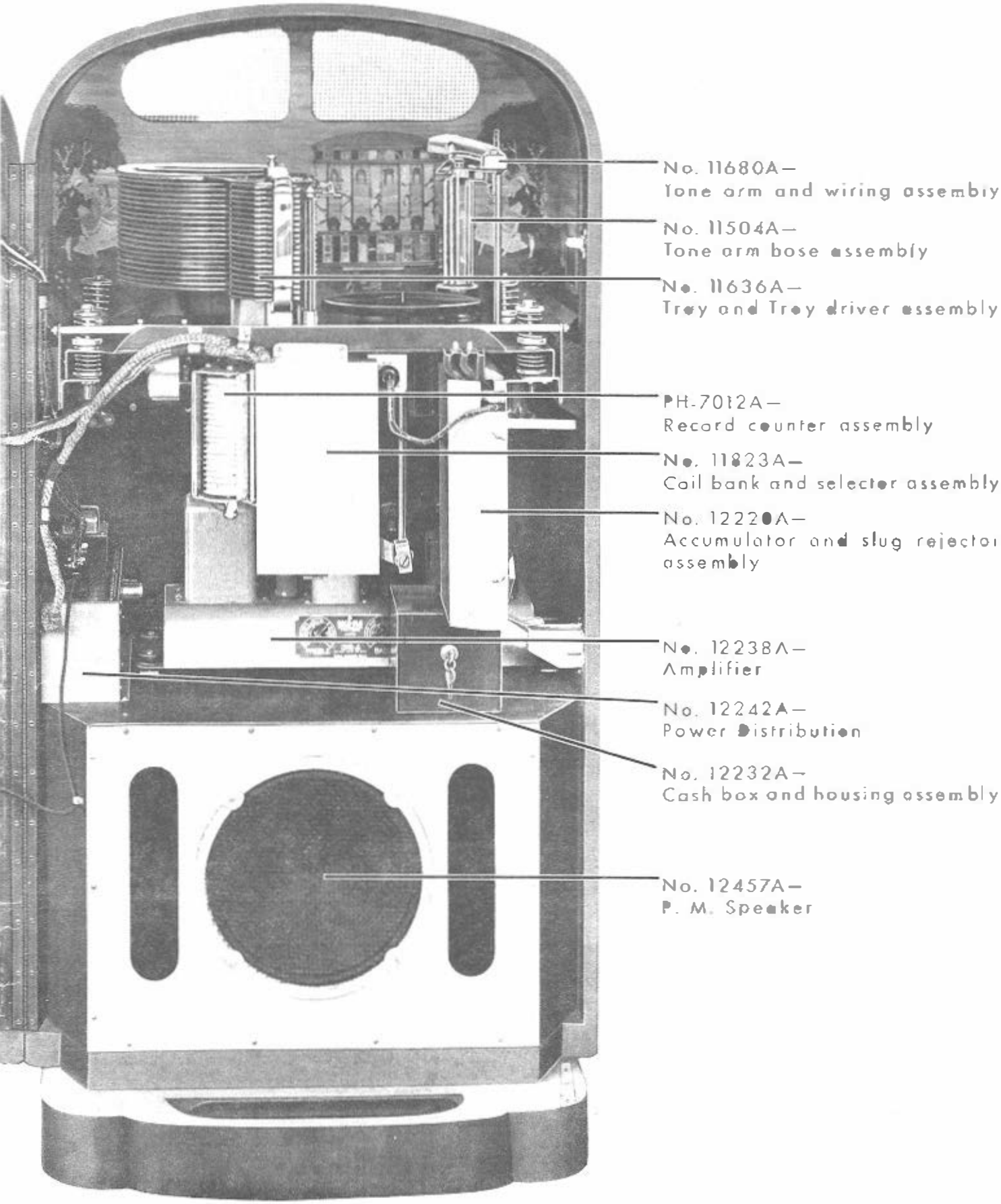

Fig. 2—Phonograph (Interior View)

LIGHTING ASSEMBLY

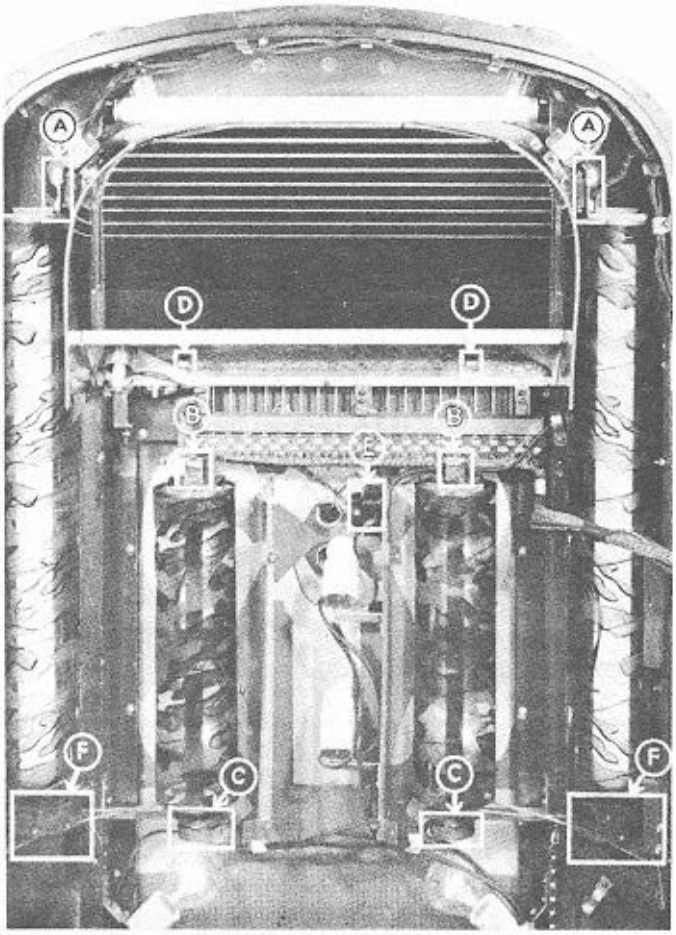

Fig. 3—Light Assembly Inside Front Door

INSTALLING EXTRA SPEAKERS

1. Connect extra 8 ohm p. m. speakers to terminal strip.
2. To connect "L" pad remove jumper connections. (*This jumper must be replaced when "L" pad is not in use.*)
3. Insert red plug in jack to number corresponding to total number of speakers used.

MECHANISM ANCHOR LOCKS

Unscrew large wing nuts on each side until fully extended. Then tighten slightly. If these nuts are not unscrewed before operating phonograph, an acoustic howl will result. (*Always clamp mechanism when transporting phonograph.*)

INSTALLING RECORDS

1. Pull out tray release bar (*C Fig. 4*).
2. Unhook tray unlocking dog (*D Fig. 4*) to bring tray from stack.
3. Place records on support discs in trays (*Discs must be felt side up*).
4. Return tray to stack making sure dog locks are in place.
5. When record servicing is completed return release bar to closed position.

TRAY RELEASE

REPLACING FLUORESCENT LIGHTS

Drop drive belt over pivot head (F). Loosen thumb screw (A) Lift and move out slightly.

Lift entire assembly out. Let lamp hang from cord and slide cylinder from lamp, downward.

Lamp is removed by a quarter turn either way.

Replace lamp having prongs parallel to slot in sockets and tighten with quarter turn either way.

Try lamp using starter switch before replacing cylinder. In replacing cylinder make sure that two studs on pivot head are properly inserted in receptacles on bottom of color cylinder.

Replace belt on pulley. Replace cylinder and tighten thumb screw. Replace protector boards.

REPLACING INCANDESCENT LAMPS

Remove protector boards. Remove plugs (E). Remove thumb screws (B). Lift cylinder and light bracket out. Replace with 25 watt clear lamps.

In replacing cylinder make sure that two studs on motor are properly inserted in receptacles on color cylinder.

Replace belt on pulley. Replace cylinder and tighten thumb screw.

ELECTRICAL DISTRIBUTION PANEL

Panel distributes power to all parts of the phonograph. Complete instructions are inscribed on the unit. The terminal strips are for hook up of wall and bar boxes. (*Instructions for hook up of Rock-Ola five wire remote control to this unit drawing No. 11465 furnished upon request.*)

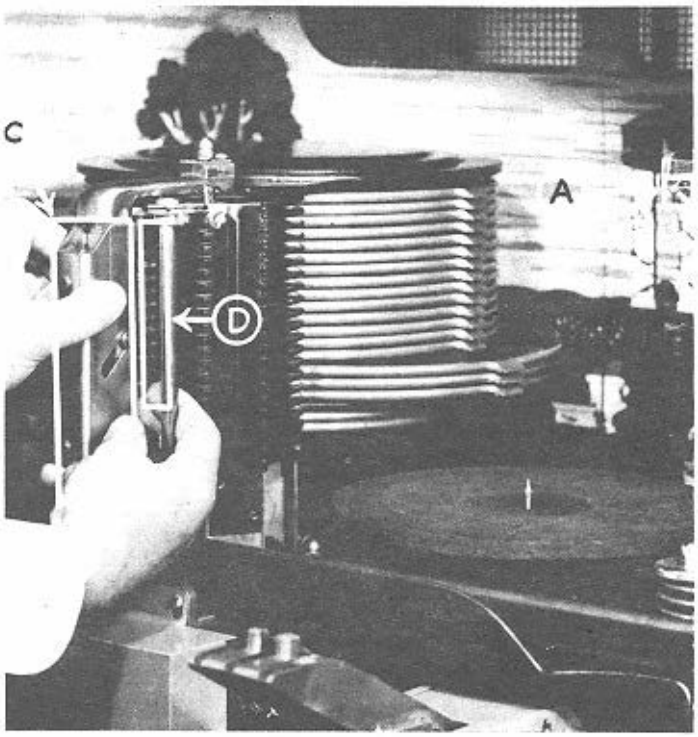

Fig. 4—Tray Release

ACCUMULATOR ASSEMBLY

CYCLE OF OPERATION

The phonograph is placed in operation by depositing a coin which travels through chutes to the slug rejector, which rejects faulty coins or slugs, and directs a good coin to the proper coin lever. The coin lever registers the proper credit on the master ratchet wheel. The coin then drops into the cash box.

The master ratchet moves one or more teeth, closing the master switch allowing the credit circuit to be completed back to the switch bank.

Then when a key is pressed, a debit is placed on the master ratchet through relay and at the same time, one of the selector coils in the selector bank will be energized, according to the key pressed.

When the selector coil is energized, the plunger of the coil is drawn back, releasing the selector key. As the selector key is released, the hook on one end of the key pulls in the selector gate. This gate has an extension on the bottom which operates the motor microswitch, turning on the mechanism motor. As the main cam starts revolving, the timing disc holds the motor micro switch in an "on" position, allowing the selector gate to be reset.

The main cam makes approximately one-half revolution, causing the selector slide unit to drop and pick out the selection that was made. The tray driver is then operated by the master cam and places the record tray over the turntable. The turntable then rises, bringing the record to a playing position under the tone arm. At this point the turntable motor is turned on (*by the action of the cam and lift assembly*) starting the turntable to revolve. The turntable and record in rising releases the tone arm from the tone arm latch.

As the record is completed, the tripping mechanism on the bottom of the tone arm shaft operates the micro switch beneath the tone arm. This switch turns on the power motor, causing the main cam to make approximately a half turn, bringing the cam to the home position. In so doing, the main cam lowers the turntable, shuts off turntable motor, operates the tray driver and returns the record played to the tray stack. At the same time, the selector slide unit is returned to its home or top position. This completes a cycle of the mechanism. The mechanism will stop unless more than one credit has been placed in the machine, in which case the mechanism continues to operate, playing the next lowest selection set up in the selector.

While the tone arm is carrying the pick up across the record, the vibrations in the record are converted from mechanical to electrical energy through the medium of a pick-up, which feeds this signal into the amplifier. The amplifier builds this feeble signal from the pick-up to the proper strength and quality to operate the loud speaker.

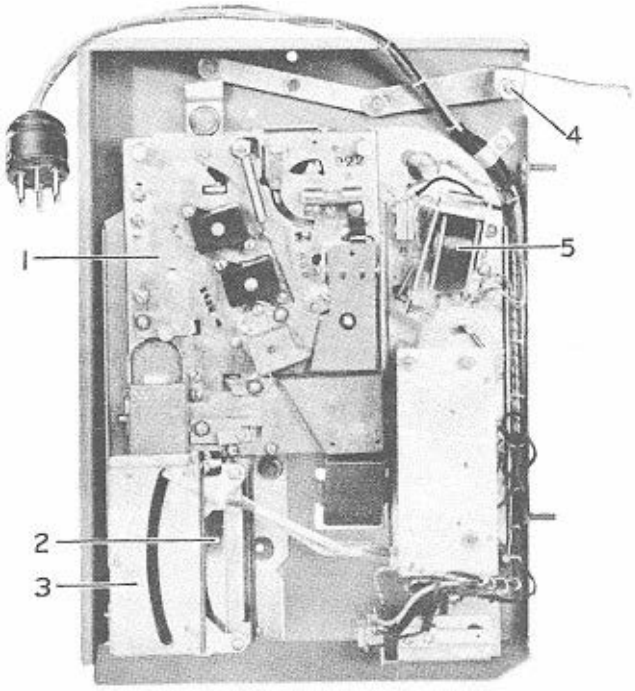

Fig. 5—No. 12220-A Accumulator Assembly

PART NO.	DESCRIPTION
1. No. 10757	National slug rejector.
2. No. 10826A	5 and 10c coin chute assembly.
3. No. 10827	25c coin chute assembly.
4. No. 12222A	Coin connecting link assembly.
5. No. 10764	Coil and armature assembly.

The accumulator assembly is the heart of your equipment—don't abuse it. Let's analyze this unit so we may understand it better. First, a coin is inserted in the chute and passes through the slug rejector which separates the coins and rejects bad coins, slugs, etc. This unit should not be tampered with unless a thorough knowledge of its operation is understood. The coin then drops onto its respective coin lever and rides it down to a point where the coin drops into the cash box.

The coin lever actuates the escapement lever which in turn releases the ratchet wheel, establishing a credit.

The five-cent ratchet disc is nearest the baseplate, the ten-cent disc is in the center and the twenty-five-cent disc is in the front. The pin which is riveted to the five-cent ratchet disc extends thru the ten-cent and twenty-five-cent ratchet discs. When Master switch (Fig. 8) is making contact, "Thank You" light will go on, "breaking" switch on large plunger and "making" switch on small plunger in interlocking switch assembly located at bottom of coin mechanism.

All switches must have clean contact points and be in proper adjustment, so that they will "make" and "break" with the action of the plungers. As each play is selected on the keyboard, corresponding selector key will be released. The debit coil returns the ratchet one tooth as each selection is made. When the last credit is used and debit coil has returned ratchet, the Master switch is opened "breaking" switch to the "Thank You" light and reversing switches on Interlocking Switch Assembly, opening circuit to the keyboard. This action is instantaneous, but must be understood in order to properly locate any particular trouble which may arise.

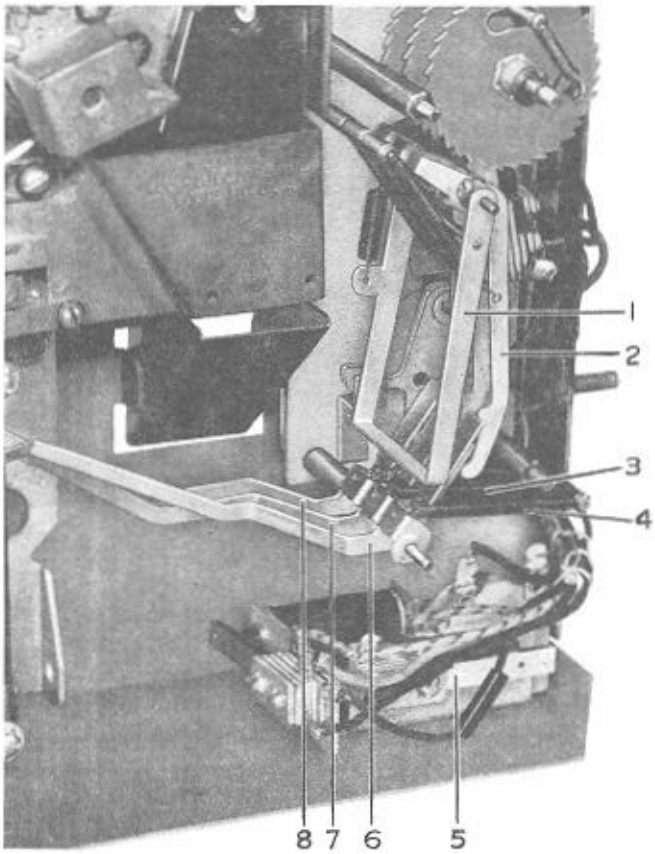

Fig. 6—Accumulator Lever

PART NO.	DESCRIPTION
1. No. 10644	Escapement lever.
2. No. 10645	Reset lever.
3. No. 10898	Coin lever spring (10c).
4. No. 10897	Coin lever spring (5 and 25c).
5. No. 12217A	Interlocking switch assembly.
6. No. 10676	Coin trip lever (25c).
7. No. 10675	Coin trip lever (10c).
8. No. 10674	Coin trip lever (5c).

When any difficulty arises which prevents completion of the aforementioned cycle, ascertain where it was blocked and check following: (1) Wires on the interlocking switch preventing the coin levers from completing their stroke. (2) Levers being fouled in the coin drop chutes. (3) Under size coins wedging in these chutes. (4) Escapement lever should slip off the ratchet disc when the coin lever is approximately ¾" from the bottom of its stroke and slip back into tooth when coin lever is about two-thirds back to rest position. The important thing to keep in mind is that adjusting or bending of contacts may be the wrong step to take. Note if the contacts are "making" and "breaking". Contact points must be cleaned periodically with carbon tetrachloride as they do accumulate dirt and grease, which could prevent current from going through.

Bent coin levers may cause multiple plays. If there are multiple plays, there are several places to look. It may be necessary to replace a broken interlock plunger and adjust the contacts of interlock solenoid. It may be necessary to adjust debit relay so that it would cancel credits from the accumulator wheel. Check debit circuit.

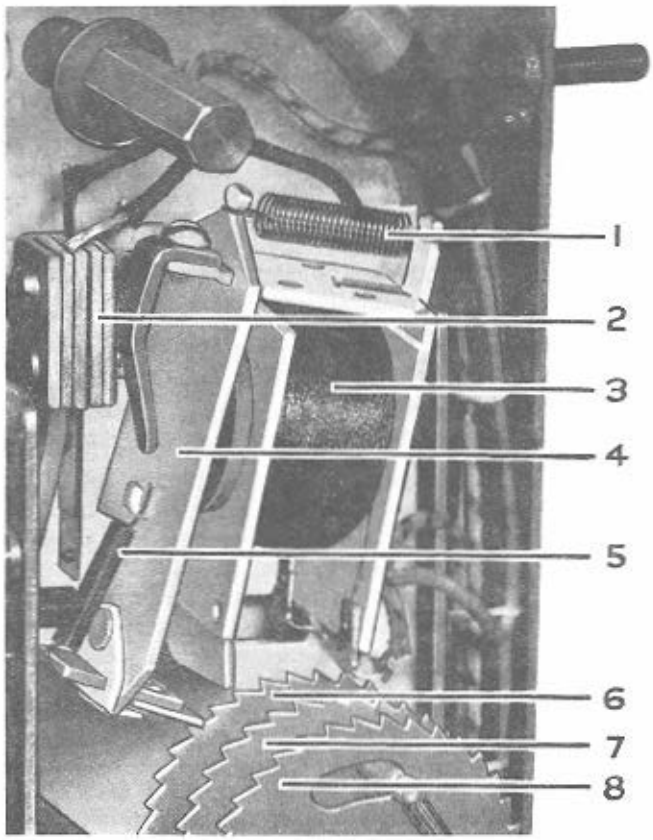

Fig. 7—Debit Relay

PART NO.	DESCRIPTION
1. No. 10487	Coil spring.
2. No. 10489	Blade switch.
3. No. 10760	Debit coil.
4. No. 10786	Armature and retainer.
5. No. 10901	Tension spring.
6. No. 10737A	5c Ratchet and hub assembly.
7. No. 10738A	10c Ratchet and hub assembly.
8. No. 10739A	25c Ratchet and hub assembly.

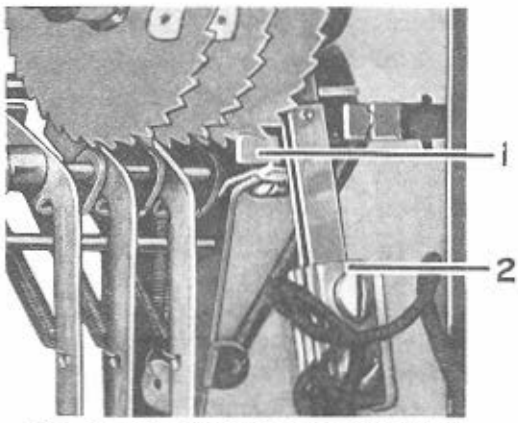

Fig. 8—Master Switch and Ratchet

PART NO.	DESCRIPTION
1. No. 10686	Escapement pawl.
2. No. 10733	Master switch.

The master switch No. 10733 must be definitely open when all credits are used, by means of pressure from the fibre stud located on the five-cent ratchet disc. When a credit is made, the five-cent ratchet disc moves up one notch removing pressure on the switch blade, closing the contacts. The machine is then ready for a selection.

INTERLOCKING SWITCH ASSEMBLY • COIL BANK *(Front and Top View)*

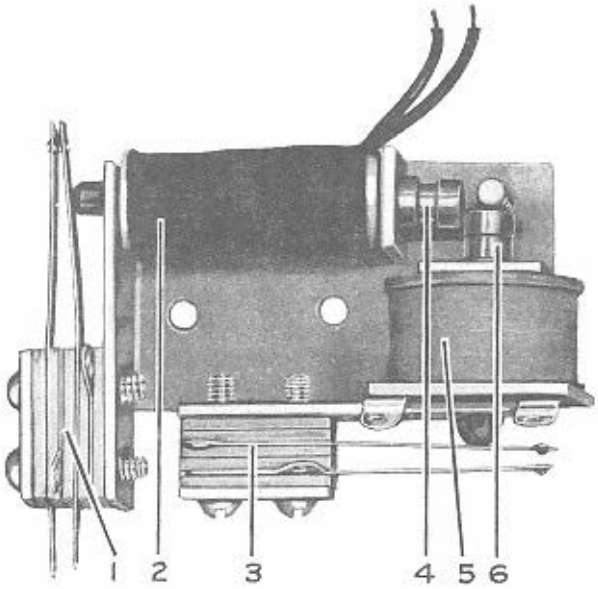

Fig. 9—No. 12217-A Interlocking Switch Assembly

PART NO.	DESCRIPTION
1. No. 11846	Blade switch.
2. No. PH-6804	Selector solenoid coil.
3. No. 10967	Blade switch.
4. No. 10964	Long coil plunger assembly.
5. No. 10893	Short coil.
6. No. 12459A	Short coil plunger assembly.

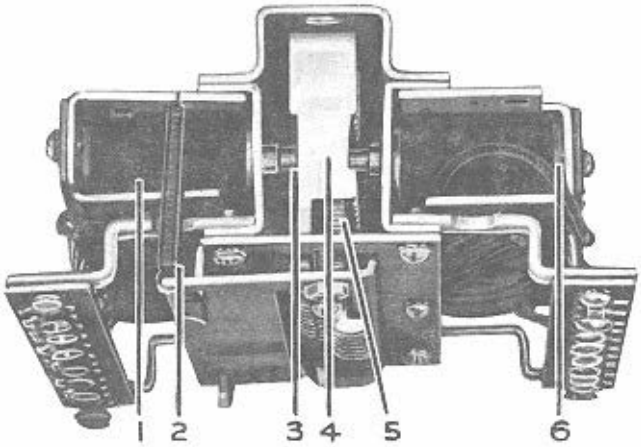

Fig. 10—Coil Bank Assembly *(Top View)*

PART NO.	DESCRIPTION	USED
1. No. PH-6804	Selector coil.....	20
2. No. PH-6805	Selector gate spring.....	2
3. No. PH-6811-1	Coil bank plunger.....	20
4. No. PH-6830-1	Selector key.....	20
5. No. PH-6806	Selector key spring.....	20
6. No. PH-6807	Plunger spring.....	20

The selector coil bank assembly consists of twenty PH-6804 solenoids which are wired to their respective switch buttons. Each solenoid contains a PH-6811-1 plunger and a PH-6807 plunger spring. Each plunger spring is compressed between the spring retainer strip and a plunger.

When the PH-6830-1 brass selector key is returned to normal position by the action of the cancel plate, the plunger slips into a notch on the selector key by pressure from the plunger spring, thereby locking the selector key.

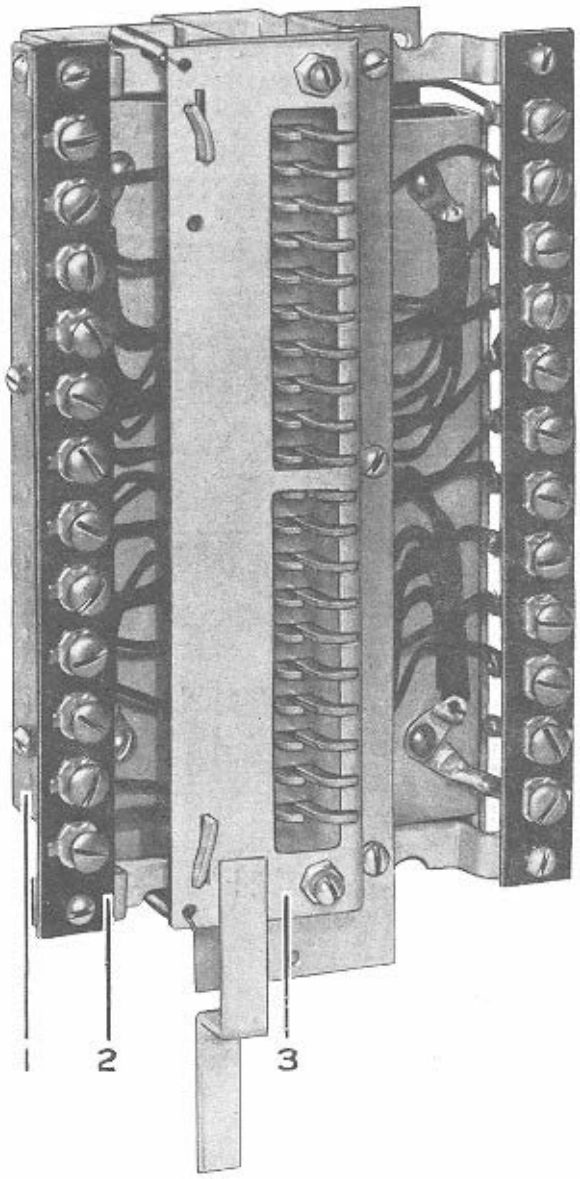

Fig. 11—No. 11822 Coil Bank Assembly *(Front View)*

PART NO.	DESCRIPTION
1. No. PH-7603A	Coil plunger spring retainer assembly.
2. No. 10890	12 log terminal strip.
3. No. 12560A	Selector gate assembly.

Power is transmitted to the selector coil bank assembly through the power distribution cable. The twenty key switch cable connects the selector solenoids to the twenty key switch buttons. The brass selector key in being released, pulls in the selector gate which closes the micro switch, thereby starting the power motor.

When a solenoid is energized, it pulls in the plunger, releasing the brass key into the path of the index elevator pawl. The selector key should move freely to assure proper selection. If a key were binding and would not release, a wrong selection would result; or if the selector key would not lock in the normal position, continuous operation would be the result.

SELECTOR ASSEMBLY *(Front and Back View)*

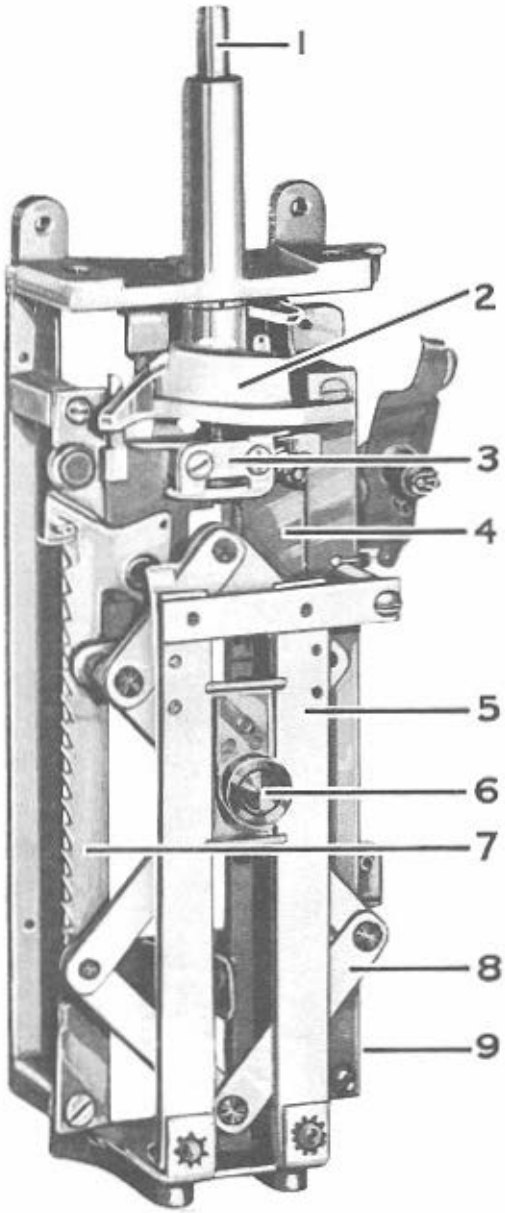

Fig. 12—No. 11945-A Selector Assembly *(Back View)*

PART NO.	DESCRIPTION
1. No. PH-7635A	Selector slide shaft assembly.
2. No. PH-1007-3	Tray unlocking cam.
3. No. 11522	Selector slide lift bracket.
4. No. 11946A	Selector slide and cancel plate assembly.
5. No. 11604A	Connecting link guide assembly.
6. No. 12282A	Selector lift roller and bracket assembly.
7. No. PH-5998A	Selector rack guide assembly.

When phonograph is in "normal" position the No. 12282A lift roller which is attached to the No. 12288A connecting link assembly is at rest on the high spot of the PH-5007-3 cam rail (*Fig. 21*). The connecting link assembly is holding the No. 11946 selector slide assembly at the top position and the selector slide is holding the PH-7635A selector shaft in its top position. The No. 11668A index elevator assembly is held at top position by means of the No. 11649 upper link stud on which the No. 11324 reset dog of the index elevator is resting.

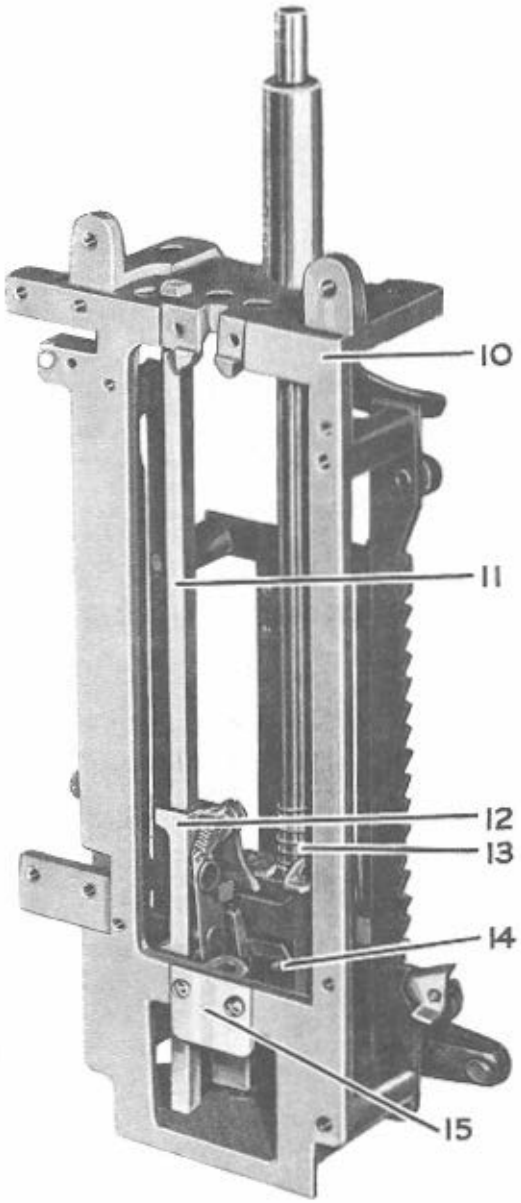

Fig. 13—No. 11945-A Selector Assembly *(Front View)*

PART NO.	DESCRIPTION
8. No. 12288A	Connecting link assembly.
9. No. 11670A	Selector slide guide assembly.
10. No. PH-6165A	Automatic selector casting.
11. No. 11671	Index elevator shaft.
12. No. 11668A	Index elevator assembly.
13. No. PH-6225	Selector slide return spring.
14. No. 11649	Upper link stud.
15. No. 11656	Index roller assembly.

Immediately after record changer starts, the connecting link, selector slide and index elevator are permitted to drop due to the action of the cam revolving and allowing the lift roller to slide off the cam lift. The index elevator pawl stops on the first PH-6830-1 selector key in its path and the No. 11522 selector slide lift bracket which is part of the selector slide comes to rest on a projection of the index elevator casting. The tray unlocking dog at top of the selector shaft is now directly opposite PH-6004 tray release dog of the selected tray.

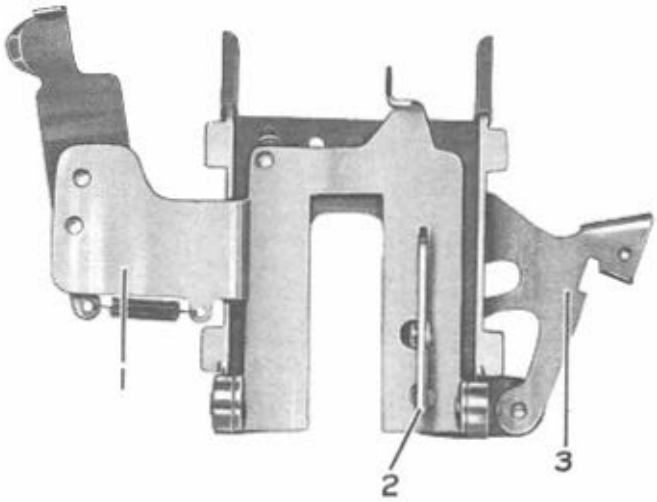

Fig. 14—No. 11946-A Selector Slide and Cancel Plate Assembly *(Front View)*

PART NO.	DESCRIPTION
1. No. PH-8318-1A	Cancel plate assembly.
2. No. PH-1020	Selector slide stop dog.
3. No. PH-4351-1	Selector slide stop.

Auxiliary roller (No. 8, Fig. 21) located on top of cam gear operates tray unlocking cam No. PH-1002-3 *(No. 2, Fig. 12)* and turns selector shaft No. PH-7635A *(Fig. 12)*. Tray unlocking dog releases tray release dog No. PH-6004 so tray driver No. 11521 will bring tray No. PH-6000-1 and record out over turntable No. 11821 ready for playing. A small cam attached to bottom of selector shaft moves against cancel plate No. PH-8318-1A, forcing cancel plate to push selector key No. PH-6830-1 *(No. 4, Fig. 6)* back to normal position. Index elevator No. 11668A then drops onto next selected key.

Forward movement of the No. PH-6860-1 cancel plate pulls out the No. PH-1020 selector stop dog which releases the No. PH-4351-1 selector slide stop. The selector slide stop in being released, stops on a tooth of the No. PH-5998A selector rack guide assembly holding the No. 11946A selector slide assembly in position while the index elevator drops to the next selected number. If there are no more selections the index elevator will drop to the bottom causing the reset dog to come to rest on the No. 11656 index roller assembly which will move the reset dog forward into the path of the link stud.

The main cam and lift assembly in continuing its revolution lifts the No. 12282A selector lift roller which is attached to the connecting link assembly to the top position. In the event the index elevator is at the bottom because there were no more selections, the index elevator would be lifted to the top position. In the course of bringing these parts to the top, the selector slide is also picked up from its latched position on the rack guide.

When the selector slide has reached the top, the selector slide stop strikes the reset roller causing it to be disengaged from the rack guide. This allows the selector slide stop dog to slip in and lock the selector slide stop in its normal position.

The No. 11522 bracket which holds the selector slide on the projection of the index elevator casting is the means for aligning the selector slide stop to the rack guide. This stop must have a clearance of about 1/32" over the tooth to assure proper latching. If the stop strikes the point of the tooth it will not latch and will drop to the bottom. Adjustment can be made by carefully bending down on the No. 11522 bracket, which governs the height of the selector slide stop.

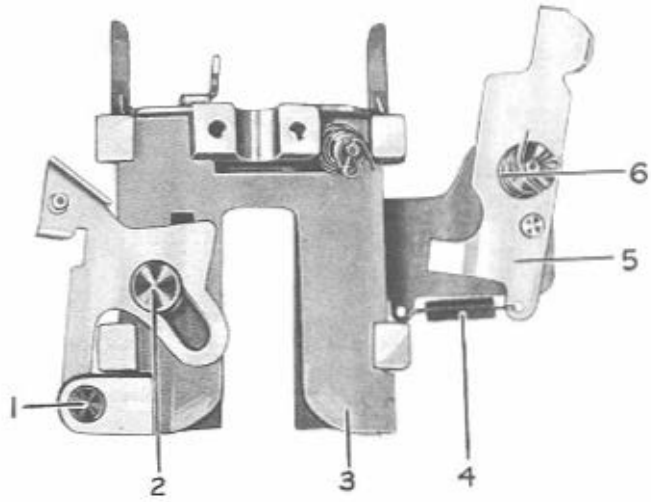

Fig. 15—No. 11946-A Selector Slide and Cancel Plate Assembly *(Back View)*

PART NO.	DESCRIPTION
1. No. 11948	Selector slide assembly.
2. No. PH-4353	Selector slide stop pivot stud.
3. No. PH-4356-1	Selector slide stop guide stud.
4. No. PH-5625	Counter pawl spring.
5. No. PH-5606	Counter pawl.
6. No. PH-5624	Pawl spring.

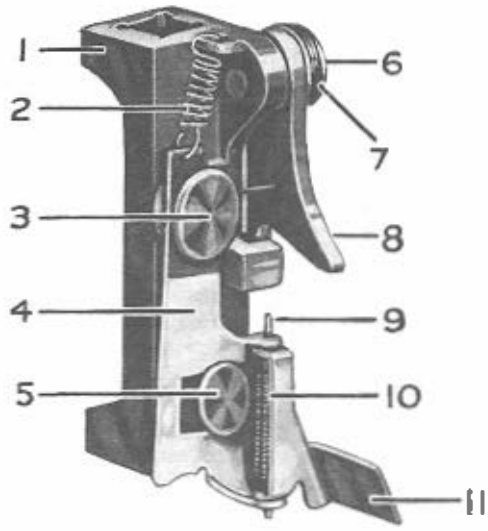

Fig. 16—No. 11668-A Index Elevator Assembly

PART NO.	DESCRIPTION
1. No. 10936	Index elevator.
2. No. 10943	Spring.
3. No. 10941	Reset pawl stud.
4. No. 10937-1	Reset pawl.
5. No. 12476	Reset pawl guide stud.
6. No. 12374	Index elevator pawl stud.
7. No. 10940	Spring (index elevator pawl).
8. No. 10938	Index elevator pawl.
9. No. 11342	Reset dog shaft.
10. No. 11340	Reset dog spring.
11. No. 11324	Reset dog.

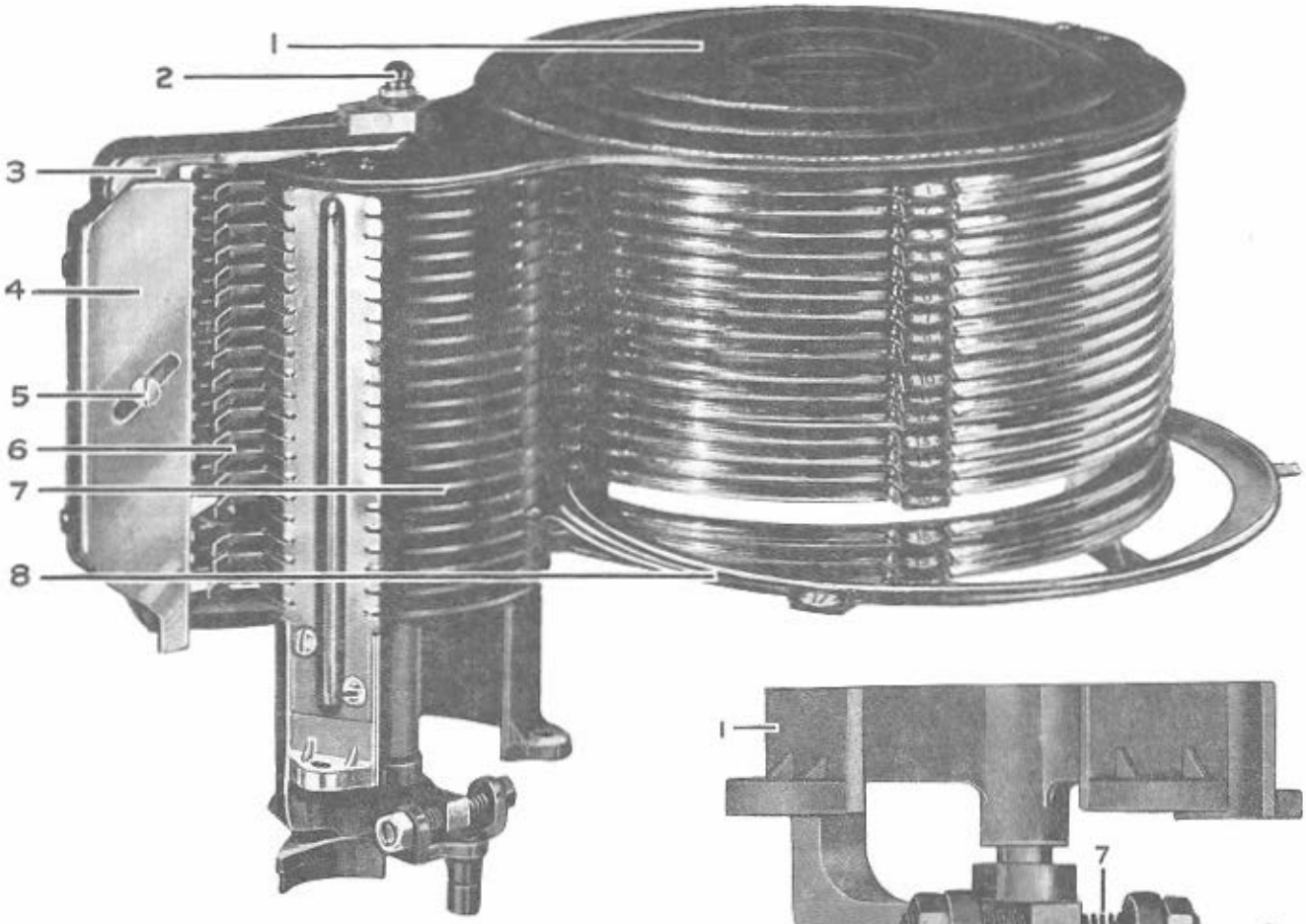

Fig. 17—No. 11636-A
Tray Stack and Driver Assembly

PART NO.	DESCRIPTION
1. No. 11500	Record cover.
2. No. 12362	Tray shaft.
3. No. 11521	Tray driver assembly.
4. No. 11502	Tray release.
5. No. 11512	Tray release screw.
6. No. PH-6004	Tray release dog.
7. No. PH-6007	Tray support disc.
8. No. PH-6000-1	Tray.

The record tray and record are moved from the tray stack position to the turntable position, first by the tray unlocking cam contacting the tray dog, which unlatches the tray from tray supporting disc and places the driving lug of the tray dog in the path of the tray release. When the tray driver starts revolving from the action of the selector cam, the tray and record will be brought over to playing posiôn against tray stop No. 11676 (*Fig. 19*), which is mounted on the mechanism chassis.

The separate unit on the bottom of the tray driver, drives the selected tray and record under the action of the tray driver spring No. PH-7438 (*Fig. 19*). This spring compensates for any over travel at tray stop position and holds tray assembly in playing position against tray stop under compression action of the tray driver spring.

On the return stroke the separate unit on the bottom of the tray driver, returns the tray to its original position by positive action of the tray driver set screw No. PH-6980 (*Fig. 19*).

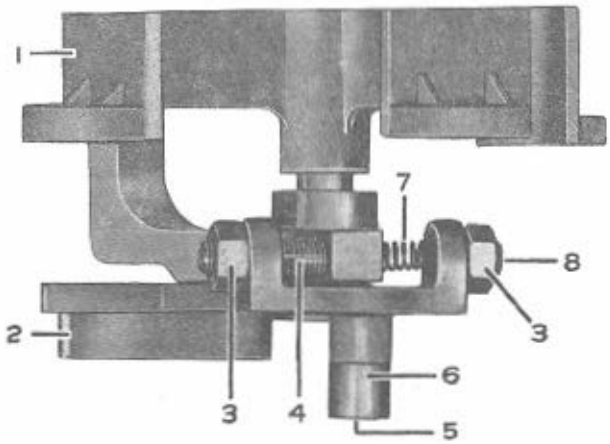

Fig. 18—Tray Driver

PART NO.	DESCRIPTION
1. No. PH-6010-1	Tray support casting.
2. No. 11519	Selector slide bracket bushing and roller assembly.
3. No. ST-412	Hex nut.
4. No. PH-6980	Tray driver set screw.
5. No. PH-1195	Selector cam roller stud.
6. No. PH-1196	Selector cam roller.
7. No. PH-7438	Tray driver spring.
8. No. PH-6011	Tray driver set screw.

The means for adjusting the tray driver mechanism manually are as follows:—

(a) When the tray and records are in the tray stack position tray driver set screw No. PH-6980 should be adjusted so that there would be a minimum clearance of 1/16" between tray assembly and tray cover support as shown in (*Fig. 19*). When phonograph mechanism is in normal operation the momentum or fast action of the tray closing will tend to bring the tray assembly snug against the tray cover support. Under no circumstances should tray driver set screw be adjusted so

TRAY STACK AND DRIVER *(Schematic Drawing)*

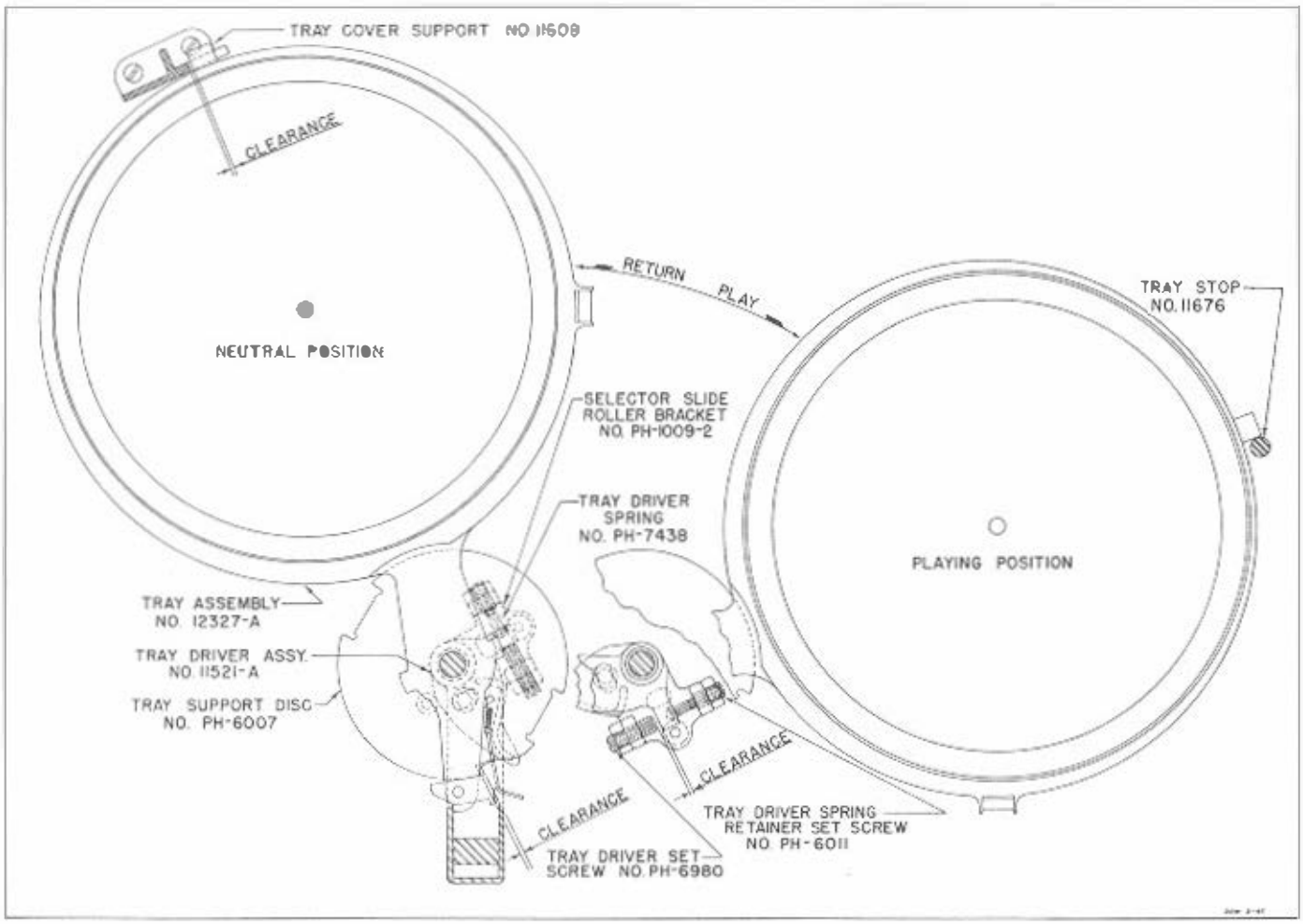

Fig. 19—Tray Stack and Driver *(Schematic Drawing)*

that the tray assembly would be forced against the tray cover support. For if this should be done there would be a bind on the cam roller No. PH-1196 (*Fig. 19*). The tray release would not seat properly due to a binding action, and the stroke of the tray driver would be shortened effecting bringing tray to playing position.

(b) The tray dog should be seated in a locking position with a minimum clearance of 1/32" to 1/16" between tray dog locking notch in tray supporting disc (*Fig. 19*). It is very important that this adjustment is properly made for when the tray driver is returning the tray assembly to the stack should the tray dog No. PH-6004 fail to drop in the locking notch of the tray support disc on the following operation of the phonograph this tray together with the tray selected would be brought over the turntable position and a jam would occur.

(c) When tray and record are in playing position against tray stop under spring action, the tray driver set screw No. PH-6980 should have a definite clearance between screw and tray driver as shown in (*Fig. 19*).

The tray driver set screw No. PH-6980 should be adjusted, then locked with the hex nut, so as to satisfy conditions outlined.

If after making adjustment as outlined above the tray driver and trays do not function properly or the stroke appears too short look for trouble elsewhere.

Check tray stop No. 11676 (*Fig. 19*) which should be perfectly square with chassis base. If the stop should be bent away from the tray stack, this will effect the tray driver stroke.

The tray release No. 11502 (*Fig. 19*) should be a snug fit on the tray driver. If there should be excessive play between the tray release and the tray driver (this would cause tray driver stroke to be short) squeeze tray release together with the tray driver in place in a vise.

The tray driver set screw No. PH-6011 (*Fig. 19*) is not an adjusting screw, but a means of holding the tray driver spring in place. The face of the tray driver set screw contacting the spring should be flush with the casting as shown in (*Fig. 19*). If the screw should be screwed in too far in the casting the space for the spring to work in would be too short for the spring to function properly. If the spring becomes too weak replace it.

TURNTABLE CAM AND LIFT ASSEMBLY *(Side and Top View)* • CAM SHAFT SUPPORT ASSEMBLY

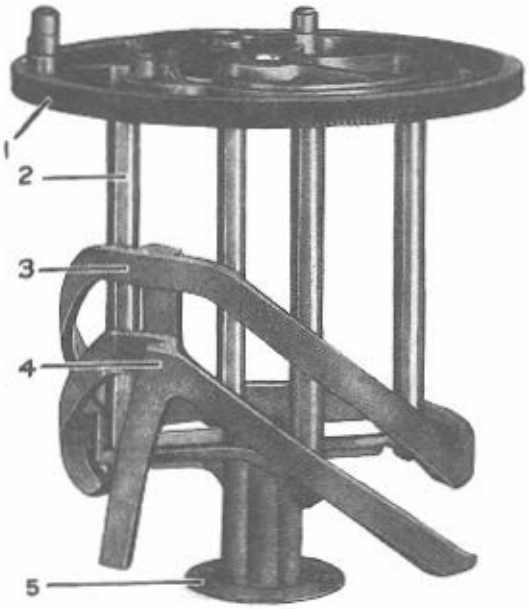

Fig. 20—No. 11648-A
Turntable Cam and Lift Assembly *(Side View)*

PART NO.	DESCRIPTION
1. No. 11646	Selector cam assembly.
2. No. PH-5034	Cam spacer rods.
3. No. PH-5006-1	Guide rail.

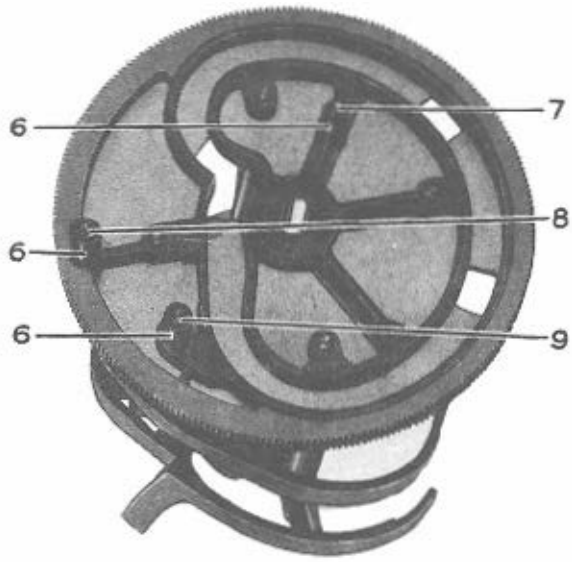

Fig. 21—No. 11648-A
Turntable Cam and Lift Assembly *(Top View)*

PART NO.	DESCRIPTION
4. No. PH-5007-3	Cam rail.
5. No. 11617	Main switch timing disc.
6. No. PH-1315	Auxiliary roller.
7. No. 11643	Tone arm return roller stud.
8. No. 11642	Auxiliary roller stud.
9. No. 11644	Roller bracket stud.

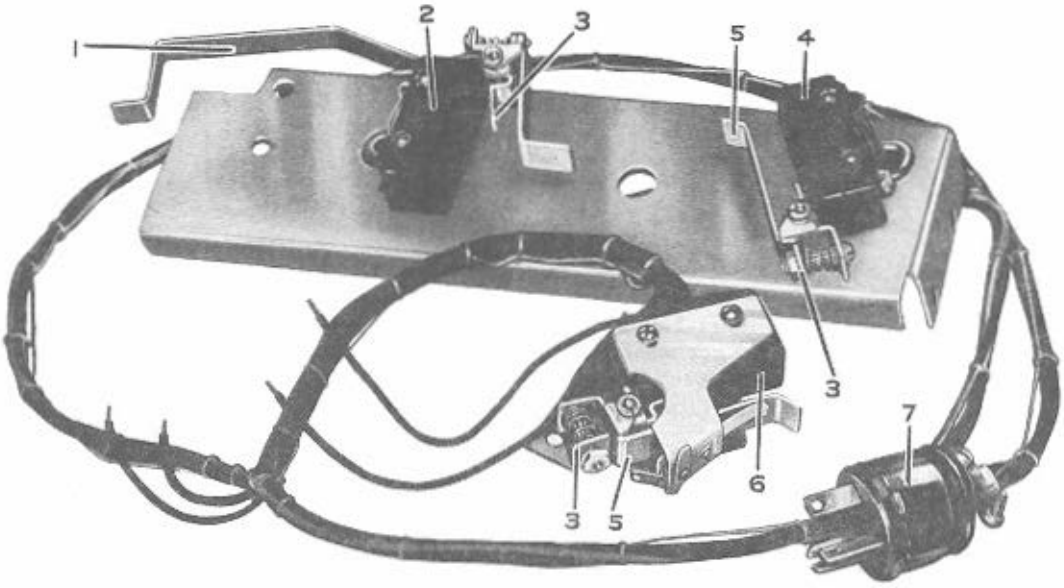

Fig. 22—No. 11698-A Cam Shaft Support Assembly

PART NO.	DESCRIPTION
1. No. 11699A	Power motor switch lever assembly.
2. No. PH-3544	Power motor micro switch (N. O.).
3. No. PH-6195	Micro switch pivot lever.
4. No. 11609	Turntable micro switch (S.P.D.T.).
5. No. PH-7295A	Micro switch lever assembly.
6. No. PH-3543	Tone arm micro switch (N.C.).
7. No. 11586	3-prong male plug.

The power motor switch lever extension No. 11699A is moved by the selector gate and in so doing operates the power motor micro switch No. PH-3544 (normally open) closing the circuit to the power motor. The power motor rotates the cam and lift assembly until the turntable micro switch lever No. PH-7295A drops into the notch of the main switch timing disc No. 11617 operating the turntable micro switch No. PH-3543. This action "breaks" the circuit to the power motor stopping the mechanism and at the same time starting the turntable motor No. 11939 which revolves the turntable No. 11821.

The tone arm No. 11680A in following grooves of the record revolves the tone arm shaft until the tripping mechanism operates the tone arm micro switch No. PH-3543 (normally closed). This action will start the power motor causing the cam and lift assembly to revolve. The main timing disc will then operate the turntable motor micro switch which will

continue to keep the power motor operating while the tone arm micro switch is being reset. This action also "breaks" the circuit to the turntable motor. As the turntable cam and lift assembly is completing its cycle it will be stopped by the lever of the power motor micro switch dropping into the notch of the main switch timing disc. In this position, the tone arm, turntable and selector slide assembly has returned to normal position from which the cycle can be repeated. Note, all micro switches must "make" or "break" as close to the center of adjustment as possible. This adjustment can be made by the screw and spring tension of the micro switch levers.

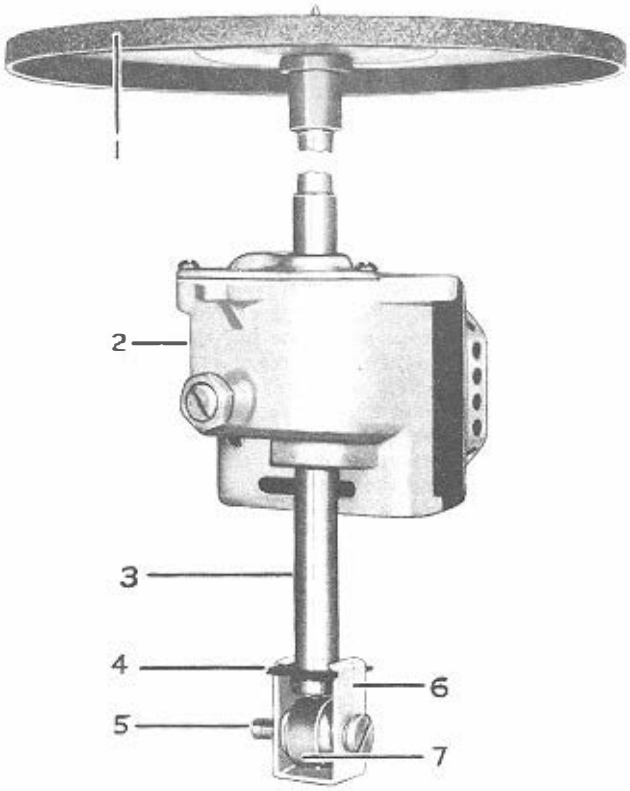

Fig. 23—Turntable and Motor Assembly

PART NO.	DESCRIPTION
1. No. 11821	Turntable assembly.
2. No. 11939	Turntable motor.
3. No. 11959	Turntable shaft.
4. No. PH-6019	Turntable shaft washer.
5. No. PH-6033	Turntable lift roller screw.
6. No. PH-6021	Turntable shaft return clamp.
7. No. PH-6023	Turntable lift roller.

Turntable on its way up will pick up the record support disc and record, bringing it to tone arm, which is adjusted to rest on edge of record. When record is completed, tone arm is returned to position by tone arm reset lever assembly working directly off cam gear. When record is completed, timing disc at base of tone arm No. 11819A, will operate micro switch which starts power motor, driving cam gear, bringing tone arm, tray, turntable and tray release dog back into starting position.

The turntable motor No. 11939 should be kept free of dirt since foreign matter may adhere to the turntable shaft No. 11959 and cause the shaft to bind. Make sure the motor is oiled periodically, an oil hole is provided on the top of the motor.

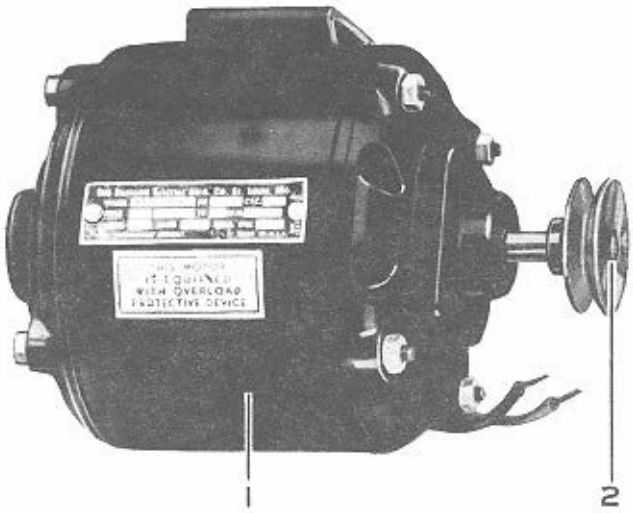

Fig. 24—Power Motor

PART NO.	DESCRIPTION
1. No. PH-4326-1	Power motor.
2. No. 11501	Pulley.

The power motor is equipped with a thermal cutout to protect the motor from overloading which would occur when the worm gear and the cam gear are tight together, a very slight amount of play is recommended.

If the main shaft is tight in the turntable cam, it may interfere with the free and easy running of the power motor, causing the protective cutout to shut off the motor. Remove the shaft, clean, polish and replace making certain that there are no burrs on the shaft.

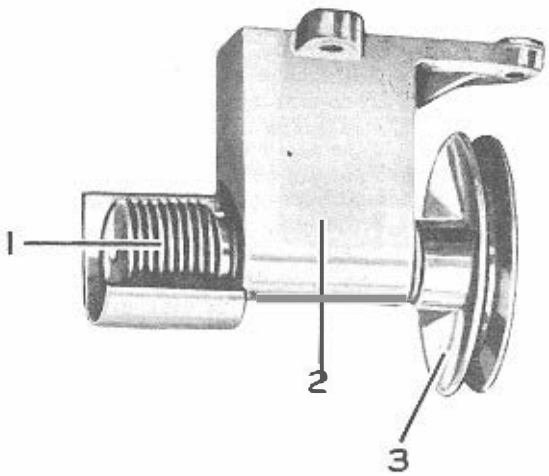

Fig. 25—No. PH-8343-A Worm and Bearing Assembly

PART NO.	DESCRIPTION
1. No. PH-141-1	Worm.
2. No. PH-7111A	Casting and bearing assembly.
3. No. PH-134	Pulley.

Turntable cam is operated by a belt driven worm gear meshing into cam gear. Worm gear and cam must move freely when turned by hand.

TONE ARM BASE ASSEMBLY *(Side, Lower and Bottom View)*

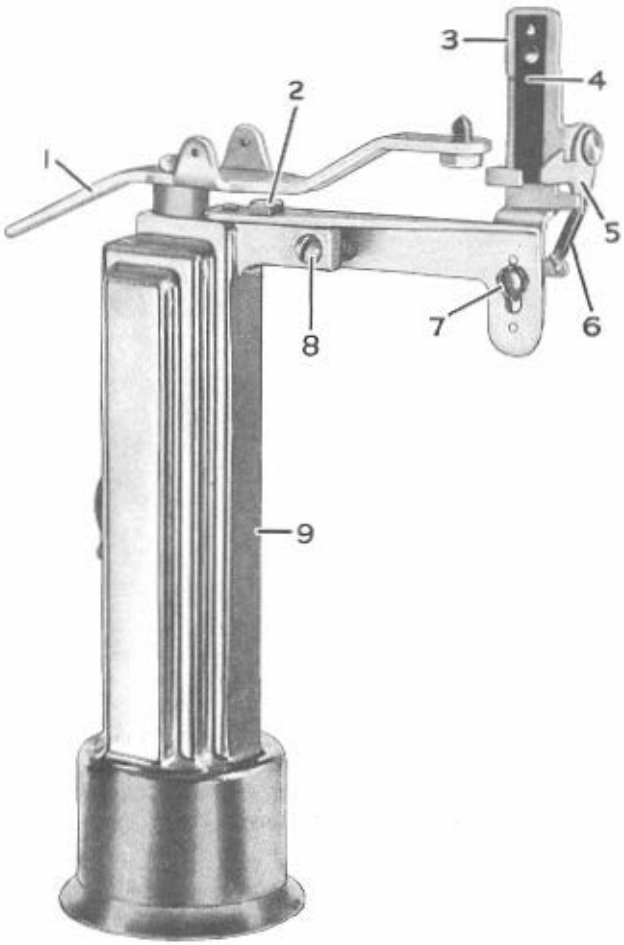

Fig. 26—No. 11540-A
Tone Arm Base Assembly *(Side View)*

PART NO.	DESCRIPTION
1. No. PH-7282	Tone arm pivot bracket and shaft assembly.
2. No. PH-6053	Adjustment bracket screw.
3. No. 11549A	Tone arm adjusting bracket and spring assembly.
4. No. PH-6183	Tone arm push spring.
5. No. PH-6184	Tone arm latch.
6. No. PH-6230	Latch spring.
7. No. ST-3752	Screw.
8. No. ST-2378	Screw.
9. No. PH-5080-2	Tone arm base.

PIVOT SCREW ADJUSTMENT

Tone arm must move freely on pivots. There should be no sideplay. To adjust starting position of the tone arm loosen hex head screw No. PH-6053 and wing nut No. ST-1352. (*Fig. 28*) and turn screw No. ST-2378 "in" or "out" so tone arm needle will contact record about 1/16" from the edge of record.

TRIP POSITION ADJUSTMENT

To adjust trip position of tone arm, loosen lock nut No. ST-401 (*Fig. 27*) and move screw No. ST-205 "in" to advance the trip position of the tone arm. To delay the trip position, move screw No. ST-205 "out" (*Fig. 27*).

In adjusting the trip position, the No. 11941 record trip lever should be in such a position so that it will not be necessary to use the entire adjusting screw. The record trip lever may be moved by loosening the two screws which hold it to the tone arm shaft. Then, reset the trip lever either toward or away from the adjustment screw. This should result in the use of only approximately one-half of the adjusting screw.

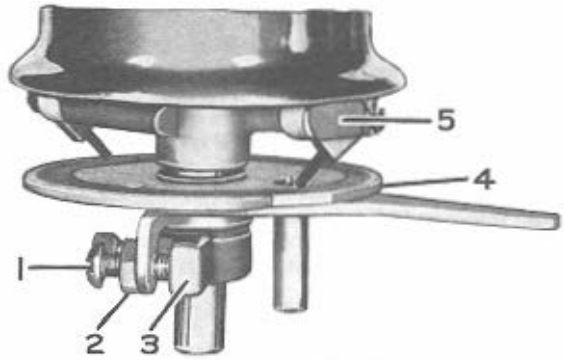

Fig. 27—No. 11540-A
Tone Arm Base Assembly *(Lower View)*

PART NO.	DESCRIPTION
1. No. ST-205	Adjustment screw.
2. No. ST-401	Nut.
3. No. 11941A	Record trip lever.
4. No. 11819A	Tone arm timing disc.
5. No. PH-405A	Trip dog and bracket assembly.

FEED IN ADJUSTMENT

The tone arm in rest position is held in the notch of the No. PH-6184 tone arm latch. In this position the No. PH-6183 tone arm push spring (*Fig. 26*) is exerting a slight amount of pressure on the tone arm. The purpose of the tone arm push spring is to give the tone arm a start toward the grooves in the record when it is released from the tone arm latch. Care should be taken so that the tension is not too strong, for this may result in the tone arm skipping over several grooves in the record. Adjustment may be made by the screw located on the bracket behind the tone arm push spring. By turning the screw "out", tension will be decreased, or by turning the screw "in", tension will be increased.

TONE ARM HEIGHT ADJUSTMENT

To adjust height of tone arm loosen screw No. ST-3752 on bracket No. 11549A. Move bracket No. 11549A up or down so that tone arm when in rest position is locked on latch No. PH-6184. The tone arm should not rest on bottom of latch No. PH-6184.

ROTATING DOG ASSEMBLY

The friction spring located under the small set screw in the hub of the No. PH-405A trip dog and bracket assembly compresses a ball bearing which is pressed against the tone arm shaft. By tightening the screw the trip dog bracket is held firmly to the shaft. This adjustment should be snug.

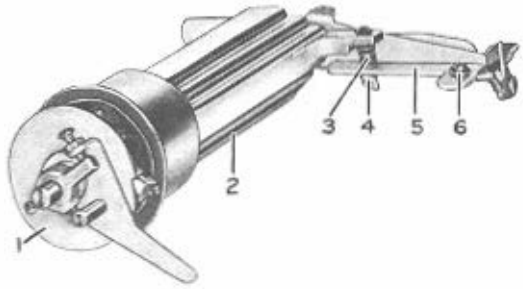

Fig. 28—No. 11540-A
Tone Arm Base Assembly *(Bottom View)*

PART NO.	DESCRIPTION
1. No. 11819A	Tone arm timing disc.
2. No. PH-5080-2	Tone arm base.
3. No. 10706	Spring.
4. No. ST-1352	Wing nut.
5. No. PH-6047	Adjusting bracket.
6. No. ST-3752	Screw.

TONE ARM AND WIRING ASSEMBLY

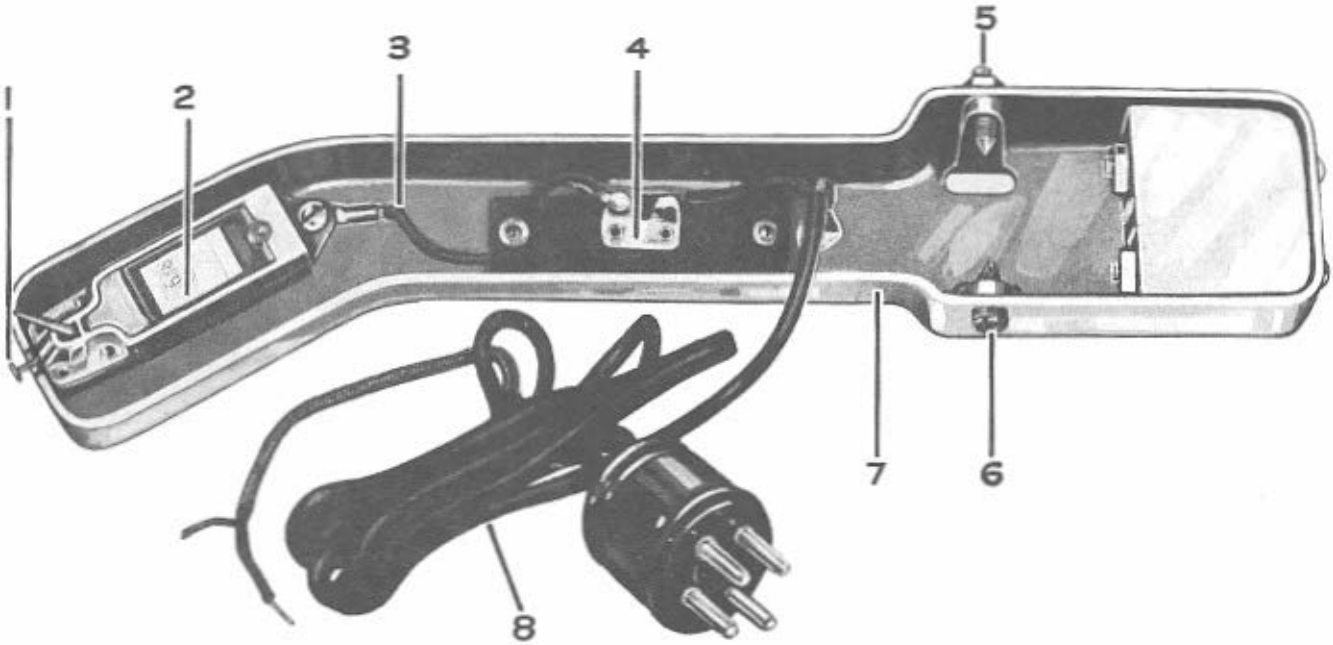

Fig. 29—No. 11680-A Tone Arm and Wiring Assembly

PART NO.	DESCRIPTION
1. No. PH-7333	Needle screw.
2. No. PH-3695	Pickup cartridge (L-21).
3. No. PH-7724A	Insulating wire assembly.
4. No. PH-7036A	Insulation strip assembly.
5. No. PH-6049	Tone arm pivot screw.
6. No. 11678	Tone arm pivot screw.
7. No. PH-6046A	Tone arm only.
8. No. PH-7707A	Pickup cord and plug assembly.

AMPLIFIER MODEL O

The output of the crystal pickup is fed from the tone arm to the input receptacle of the amplifier. The signal is then amplified by the 6J5 voltage amplifier stage, and further by the power amplifier stage consisting of two 6L6G output tubes operating in push-pull. The highly amplified signal is then fed into the output transformer and then to the 12" dynamic speaker. The maximum power output of this amplifier is approximately 24 watts. A 5U4G rectifier tube is used for rectification of the D.C. plate voltage. A tube heater relay has been incorporated in the cathode circuit of the 6L6G tubes to provide approximately 10 volt heater voltage to the tubes until their proper operating temperatures have been reached. Individual bass and treble tone controls have been provided to adequately cover the desired tone range.

It should be noted that plug-in type filter condensers are used. Neither these condensers nor any of the tubes should be removed while the amplifier is connected. Should the amplifier fail to function, first check all fuses and all plug-in connections before removing the amplifier chassis from the phonograph. If further servicing is necessary refer to the circuit diagram for condenser and resistor values and for normal operating voltages which are indicated at several points.

For peak performance, the two 6L6G output tubes should be properly matched and balanced. Otherwise distortion may result. The pickup cartridge should be replaced only with the standard No. (L-21) cartridge as this unit is properly matched to the amplifier.

AMPLIFIER MODEL OS

This amplifier differs only from the Model O amplifier in the voltage amplifier stage. This stage consists of a type 6SN7 dual triode tube resistance coupled to the power amplifier stage.

TO OBTAIN BETTER CONTROL OVER THE BASS

1. Remove the by-pass condenser which is located between the plate of the 6J5 tube and the ground connection.

2. Add a 30,000 ohm resistor across the by-pass condenser in the bass circuit as shown in the schematic drawing.

This will allow the same maximum bass, but will lower the minimum.

Before making the above changes be sure to check the following:

1. Pickup cartridge.

2. Grille screen may be rattling or the cement which holds cloth to screen may be blocking air from going through causing a rebounding effect.

AMPLIFIER *(Top and Bottom View)*

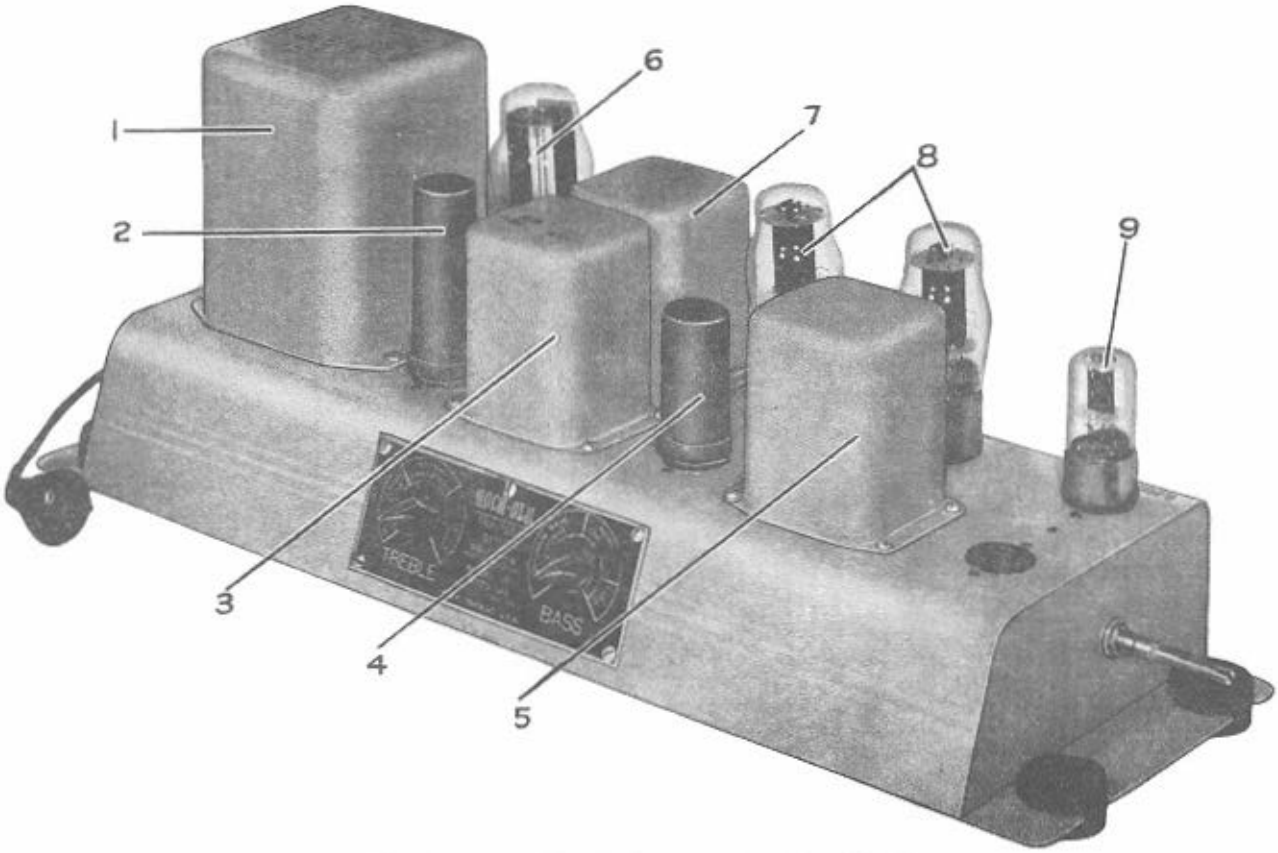

Fig. 30—No. 12238-A Amplifier *(Top View)*

PART NO.	DESCRIPTION
1. No. PH-3685-5	Transformer (power).
2. No. 11967	Condenser (16 Mfd.).
3. No. PH-3682-1	Filter choke.
4. No. 11970	Condenser (8-8-8 Mfd.).
5. No. PH-3684-1	Transformer (input).
6. No. PH-3190	5U4G Tube.
7. No. PH-3683	Transformer (output).
8. No. PH-3191	6L6G Tube.
9. No. PH-3505	6J5G Tube.

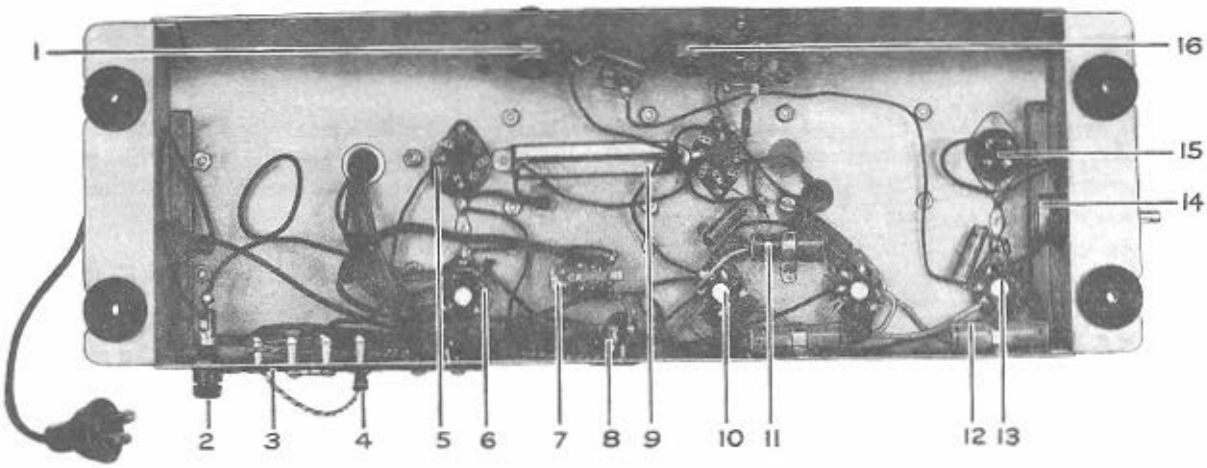

Fig. 31—No. 12238-A Amplifier *(Bottom View)*

PART NO.	DESCRIPTION
1. No. PH-3681-1	Treble control.
2. No. 11555	Fuse holder.
3. No. PH-3723-1	Speaker terminal strip.
4. No. PH-8305	Amplifier speaker plug and wire assembly.
5. No. PH-3732	8 prong condenser socket.
6. No. PH-3161	Tube socket 5U4G.
7. No. 11579	200 ohm relay.
8. No. PH-3164	Speaker socket.
9. No. PH-3173	1M ohm 10W candohm resistor.
10. No. PH-3162	Tube socket 6L6G.
11. No. PH-3511	.0075 Mfd. 1600V. condenser.
12. No. PH-3177	50 Mfd. 50V. condenser.
13. No. PH-3776	Tube socket 6J5G.
14. No. PH-3686-2	Dual volume control 2 Meg. 50M ohm.
15. No. PH-3165	4 prong socket PU.
16. No. PH-3680-1	Bass control.

POWER DISTRIBUTION PANEL *(Top and Bottom View)*

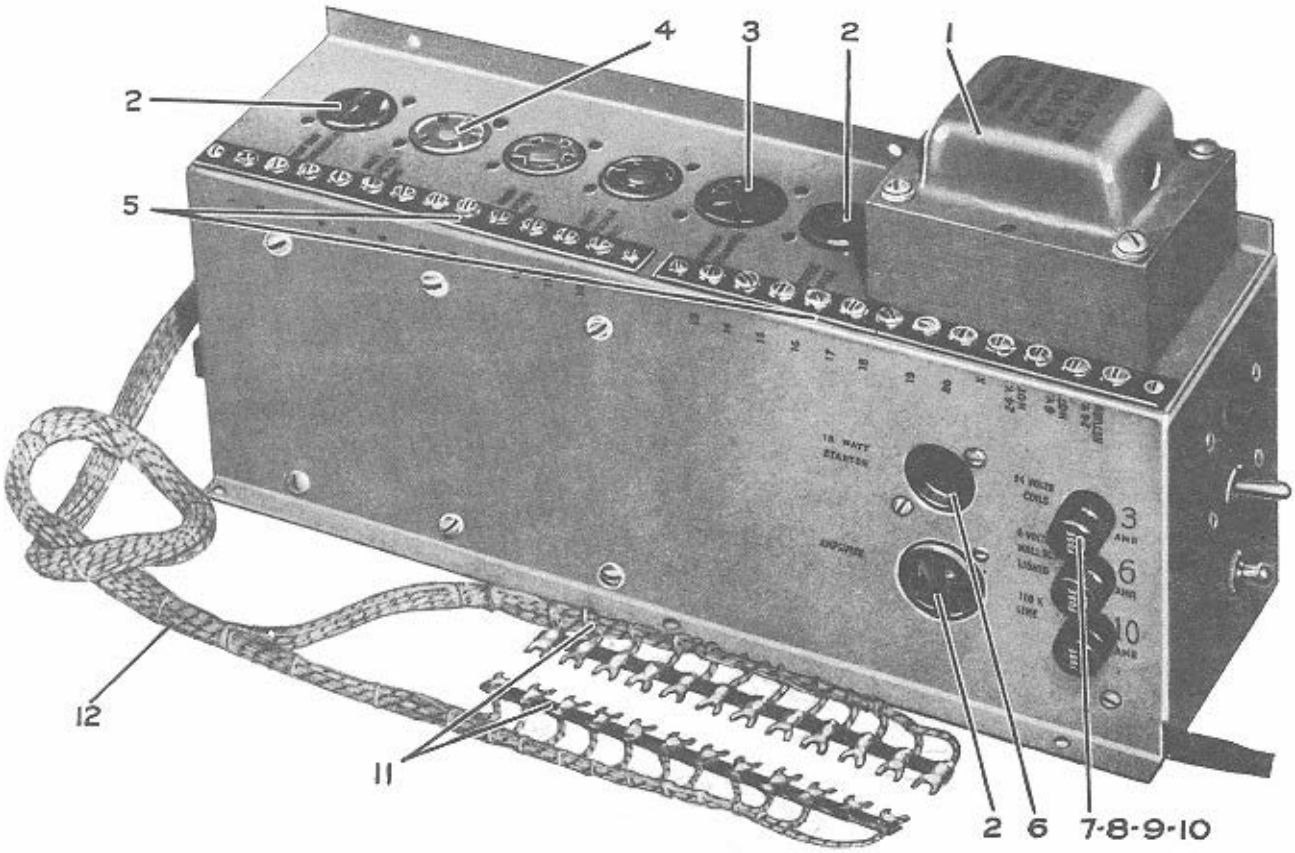

Fig. 32—Power Distribution Panel *(Top View)*

1. No. 11551 Transformer.
2. No. PH-3270 2 prong socket.
3. No. 11559 3 prong socket.
4. No. PH-3740 5 prong socket.
5. No. 10890 12 lug terminal strip.
6. No. 11556 15 watt fluorescent light starter.
7. No. 11555 Fuse holder.
8. No. PH-3523 3 amp fuse.
9. No. 11552 6 amp fuse.
10. No. ST-3092 10 amp fuse.
11. No. 10925 12 lug (spade) connector strip.
12. No. 11606 Power distribution cable assembly.

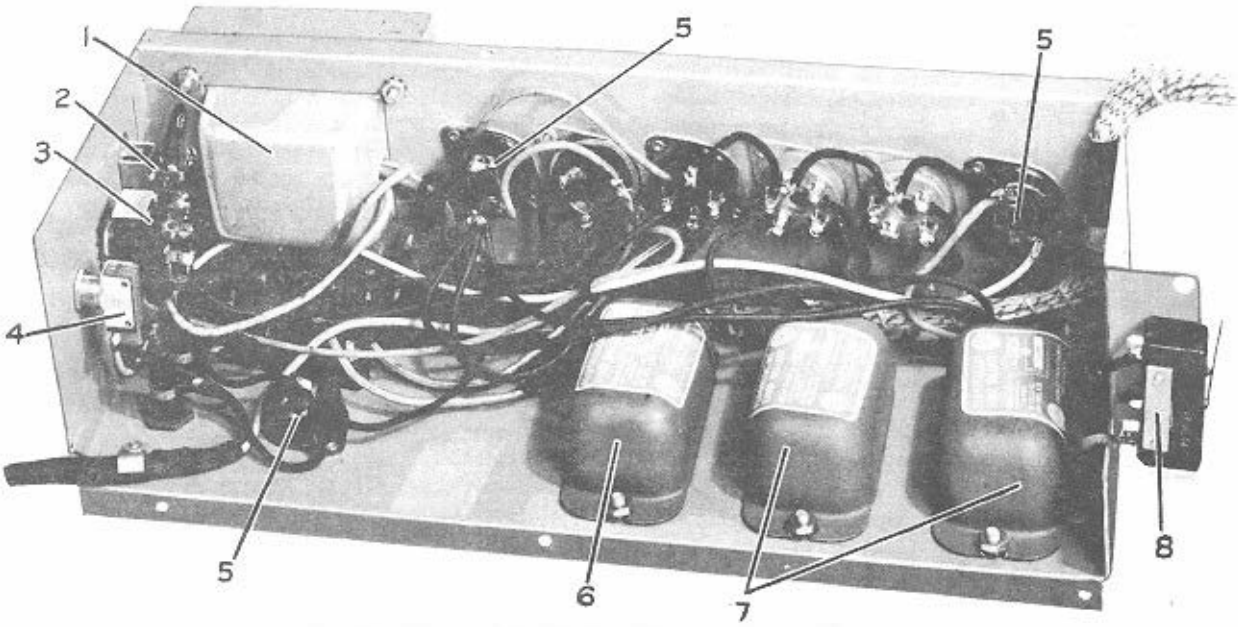

Fig. 33—Power Distribution Panel *(Bottom View)*

1. No. 11551 Transformer.
2. No. 11979 D.P.D.T. switch.
3. No. 11978 S.P.D.T. switch.
4. No. PH-3002 Main toggle switch.
5. No. PH-3270 110V. service socket.
6. No. 11929 Ballast 15W.
7. No. 11980 Ballast 20W.
8. No. 12447 Micro switch (N.O.).

PARTS INDEX

•

LISTING OF PARTS BY ASSEMBLIES

LISTING OF PARTS BY ASSEMBLIES

EXTERIOR CABINET PARTS • SECTION A

PART NO.	DESCRIPTION
12059-A	Rock-Ola Escutcheon & Plastic Assembly
12274	Catalin Cap (*R.H.*)
12271	Catalin Cap (*L.H.*)
12275	Pilaster (*Right Top Half*)
12272	Pilaster (*Left Top Half*)
12276	Pilaster (*Right Bottom Half*)
12273	Pilaster (*Left Bottom Half*)
12297	Plastic Catalin Support
12067	Glass (*Front Door*)
11538	Selector Key Button
12073	Grille (*Upper Right*)
12074	Grille (*Upper Left*)
20292	Grille (*Front Door Center*)
12075	Grille (*Lower Right*)
12076	Grille (*Lower Left*)
12078	Grille Cellulose Acetate
12080	Grille Cloth
12061	Moulding (*Top, Metal*)
12295	Moulding (*Cap, Metal*)
12062	Moulding (*Side, Metal*)
12264	Support Rib (*Cap, Metal*)
12267	Support Rib (*Cap, Metal R.H.*)
12268	Support Rib (*Cap, Metal L.H.*)
12471-A	Front Door Support Roller & Bracket
12384	Back Door (*Top*) Ventilating Screen
12097	Back Door (*Bottom*) Ventilating Screen
12082-A	Door Pilaster Reflector Assembly (*R.H.*)
12083-A	Door Pilaster Reflector Assembly (*L.H.*)
12065	Reject Key Shaft
12064-A	Reject Key Bracket Assembly
12066	Coin Release Spring
12068	Locking Lever Assembly
11935-A	"Thank You" Glass and Holder Assembly
11531	"Thank You" Glass Holder
11533	"Thank You" Glass
12087-A	Program Holder and "Thank You" Glass Assembly
12091	Program Holder (*Rear*) and Spring Lock Assembly
12458	"Thank You" Glass Gasket
11955	Key Plate
ST-6053	Caster Socket
ST-6005	Caster
ST-7350-1	Back Door Lock & Key (*D-032*) Less Latch Latch Only for ST-7350-1 Key Only (*D-032*) Key Only (*G-451*)
ST-7349-1	Front Door Lock & Key (*D-032*) Less Latch Latch Only for ST-7349-1
12060	Rock-Ola Escutcheon Only
12081	Grille Screen
12203	Reject Key Bracket
12246	Front Door Roller Guide

INTERIOR CABINET PARTS • SECTION B

PART NO.	DESCRIPTION
12053	Fluorescent Tube (*20W White*)
11903	Fluorescent Tube (*15W White*)
11892	Fluorescent Light Lamp Holders
12035-A	Fluorescent Side Cyl. Bracket (*Weld Assembly R.H.*)
12249-A	Fluorescent Side Cyl. Bracket (*Weld Assembly L.H.*)
12027-A	Colored Cylinder Assembly (*R.H. Side*)
12045-A	Colored Cylinder Assembly (*R.H. Center*)
12044-A	Colored Cylinder Assembly (*L.H. Center*)
12028-A	Colored Cylinder Assembly (*L.H. Side*)
12039-A	Colored Cylinder Cable & Bracket Assembly (*L.H. Side*)
12472-A	Colored Cylinder Cable & Bracket Assembly (*Center*)
12032-A	Colored Cylinder Cable & Bracket Assembly (*R.H. Side*)
12052	Colored Cylinder Drive Spring
12512-A	End Cylinder Bracket and Motor Mtg. Welding Assembly (*R.H.*)
12513-A	End Cylinder Bracket and Motor Mtg. Welding Assembly (*L.H.*)
11995	Front Door Color Cylinder Motor (*R.H.*)
11899	Front Door Color Cylinder Motor (*L.H.*)
12416-A	Program Light Bracket Assembly (*R.H.*)
12417-A	Program Light Bracket Assembly (*L.H.*)
12091-A	Program Holder (*Back Part*) and Spring Lock Assembly
12042-A	Program Light Cable Assembly
11987-A	Cabinet Light Assembly
PH-3107	25 W. 120 V. Frosted Lamp
PH-3123	7.5 W. 120 V. White Lamp
ST-3059	Lamp (*28 V.*)
11534	"Thank You" Socket
12457	Speaker
12064-A	Reject Plunger Assembly
12219	Coin Return Cup
11594-A	Socket Mtg. Plate Assembly
PH-7012-A	Record Counter Assembly
12314-A	Veeder Counter and Bracket Assembly
11896	Duplex A.C. Outlet
12067	Front Door Glass
PH-3874	Porcelain Shell Keyless Socket
12079-A	Grille Screen Assembly
12384	Back Door Screen (*Top*)
12337-A	Back Ground Reflector & Flexglass Assembly (*Large*)
12338-A	Back Ground Reflector & Flexglass Assembly (*Small*)
12082-A	Door Pilaster (*Inside*) Reflector Assembly (*R.H.*)
12083-A	Door Pilaster (*Inside*) Reflector Assembly (*L.H.*)
PH-3584	Plug 4 Prong Male
PH-3593	Plug 5 Prong Male
11532	"Thank You" Glass Holder Lock Clip
11989-A	Center Cylinder Pivot & Stud Assembly
12043-A	Program Light Cable Assembly
12423	Inside Cleat Trim
12388	Inside Top Trim (*L.H.*)
12440	Select Glass Holder

SOUND EQUIPMENT (AMPLIFIER & SPEAKERS) • SECTION C

PART NO.	DESCRIPTION
12238	Model "O" Amplifier (*Without Tubes*) Assembly
11827	Dynamic Speaker
12457	Permanent Magnet Speaker (*Substitute for 11827*)
PH-3190	5 U 4 G Tube
PH-3191	6 L 6 G Tube
PH-3505	6 J 5 G Tube
PH-3161	5 U 4 G Tube Socket
PH-3162	6 L 6 G Tube Socket
PH-3776	6 J 5 G Tube Socket
PH-3164	Socket "Spk" (*Five Prong*)
PH-3165	Socket "PU" (*Four Prong*)
PH-3732	Socket Red (*Eight Prong*)
PH-3173	Resistor 1000 Ohm 10 Watt
PH-3117	Resistor 250,000 Ohm ½ Watt
PH-3005	Resistor 25,000 Ohm ½ Watt
PH-3535	Resistor 2,500 Ohm ½ Watt
PH-3508	Resistor 5,000 Ohm ½ Watt
10859	Resistor 1 Megohm ½ Watt
PH-3177	Condensor 50 MFD 50 Volts
PH-3511	Condensor .0075 MFD 1600 Volts
10540	Condensor .04 MFD 400 Volts
PH-3102	Condensor .02 MFD 400 Volts
PH-3094	Condensor .004 MFD 400 Volts
PH-3011	Condensor .01 MFD 400 Volts
PH-3514	Condensor .0005 MFD 400 Volts
11970	Condensor 8-8-8 (*Plug-in-type*)
11967	Condensor 16 MFD (*Plug-in-type*)
PH-3681-1	Treble Control 100,000 Ohms
PH-3680-1	Bass Control 50,000 Ohms
11616	Volume Control Assembly
PH-3725	Extra Speaker Volume Control (*L. Pad*)
PH-3686-2	Dual Vol. Control 2 Meg. 50,000 Ohms
PH-3685-5	Transformer (*Power*)
PH-3683	Transformer (*Output*)
PH-3684-1	Transformer (*Input*)
PH-3682-1	Filter Choke
11579	Relay (*200 Ohm*)
PH-8305	Amplifier Speaker Plug and Wire Assembly
PH-3704	Jack Plug
PH-3523	Three Ampere Cartridge Fuse
PH-3723-2A	Speaker Terminal Strip Assembly
PH-6208	Floating Plate Washer

POWER DISTRIBUTION PANEL ASSEMBLY • SECTION D

PART NO.	DESCRIPTION
12242-A	Power Distribution Assembly
12243-A	Power Distribution Chassis and Socket. Riveting Assembly
11606-A	Power Distribution Cable Assembly (*Complete*)
11978	S.P.D.T. Switch
11979	D.P.D.T. Switch (*Slide Type*)
PH-3002	S.P.S.T. Switch
PH-3270	Two Prong Female Socket
11559	Three Prong Female Socket
PH-3722	Four Prong Female Socket
PH-3740	Five Prong Female Socket
11558	Socket for Fluorescent Light Starter
11556	Starter for Fluorescent Light (*15W*)
ST-3092	Ten Ampere (*Main*) Fuse
11552	Six Ampere (*Remote*) Fuse
PH-3523	Three Ampere (*Light*) Fuse
11555	Fuse Holder
12447	Micro Switch (*Normally Open*)
11551	Transformer
11929	Fifteen Watt Ballast
11980	Twenty Watt Ballast
10890	12 Lug Terminal Strip

MECHANISM PARTS • SECTION E

PART 1 *Turntable Assembly and Motor*

PART NO.	DESCRIPTION
11821-A	Turntable Assembly
11959	Turntable Shaft
PH-6019	Turntable Shaft Washer
PH-6033	Turntable Lift Roller Screw
PH-6032-1	Turntable Lift Arm
11548-A	Turntable Lever Assembly (*Complete*)
PH-6023	Turntable Lift Roller
PH-6599	Lift Arm Spring Pin
PH-6034	Lift Arm Pivot Stud
12289	Lift Arm Slide Roller
PH-6036	Lift Arm Spring
12291	Lift Arm Roller Stud
PH-6020	Lift Arm Pivot Bracket
12293	Selector Lift Roller Assembly
12286	Selector Lift Slide
PH-6022	Slide Mounting Arm
12290	Slide Roller Pin
12292	Mounting Arm Pin
PH-6021	Shaft Return Clamp
11541	Counter Drive Stud
PH-6027	Pivot Bracket Stud
11939	Motor (*Turntable*)
11806	Turntable Washer

PART 2 *Cam Master Assembly*

PART NO.	DESCRIPTION
11648-A	Turntable Cam Assembly
PH-5007-3	Turntable Cam
PH-5034	Cam Spacer Stud
PH-5006-1	Follow Cam
PH-1561-A	Selector Cam Gear Collar Assembly
PH-1092	Selector Cam Gear Pin
PH-206-2	Selector Cam Gear Casting
11646-A	Selector Cam Gear and Pin Assembly
11647-A	Lift Cam Riveting Assembly
PH-4738	Selector Cam Washer
11632	Cam Shaft
11644	Roller Bracket Stud
11643	Tone Arm Return Roller Stud
11642	Auxiliary Roller Stud
PH-1315	Auxiliary Roller
PH-6017	Worm Gear Spacer
11617	Switch Timing Disc
11618	Switch Timing Disc Plate

MECHANISM PARTS • SECTION E (Continued)

PART 3 *Cam Shaft Support and Switch Assembly*

PART NO.	DESCRIPTION	PART NO.	DESCRIPTION
11698-A	Cam Shaft Support Assembly (*Complete*)	PH-6196	Micro Switch Lever Pin
11697-A	Cam Shaft Support and Switch Assembly	PH-6233	Micro Switch Spring
PH-3544	Power Motor Micro Switch (*N.O.*)	11699-A	Master Switch Lever Assembly
11609	Turntable Micro Switch (*S.P.D.T.*)	11585	Mechanism Cable Assembly
PH-7295-A	Micro Switch Lever Assembly	11586	3 Prong Male Plug and Shell

PART 4 *Chassis Assembly*

PART NO.	DESCRIPTION	PART NO.	DESCRIPTION
11982-A	Mechanism Chassis and Spring Holder Assembly	11966-A	Support Angle and Bracket Assembly (*L.H.*)
11622	Chassis Mtg. Spring (*Upper Rear*)	PH-6846	Record Reject Plunger
12252	Chassis Mtg. Spring (*Upper Front*)	PH-7167-A	Reject Lever Assembly
12443	Chassis Mtg. Spring (*Lower*)	PH-6095	Reject Lever Stud
11563	Tone Arm Push Rod Slide Stud	PH-6089	Reject Lever
11619	Tone Arm Reset Lever	11824	Reject Rod Support
PH-6084	Tone Arm Lever	PH-6231	Extension Spring
PH-6099	Tone Arm Lever Pivot Stud	PH-6232	Extension Spring
PH-6096	Tone Arm Push Rod	10471	Turntable Adjusting Spring
PH-6085	Tone Arm Push Rod Stud	10461	Spring Stud
PH-6098	Tone Arm Mounting Stud	PH-4302	Spring
11621	Tone Arm Reset Lever Assembly	11838-A	Spring Clamp Handle Assembly
12314-A	Counter and Bracket Assembly	11810	Spring Clamp Handle Stud
12313-A	Counter Cable and Lever Assembly	11968	Front Tie Rod
11543	Counter Cable	11939	Constant Speed Motor (*Turntable*)
12312	Counter	12336	Russell Power Motor
11965-A	Support Angle and Bracket Assembly (*R.H.*)	12361	Motor Condensor
		11981	Reject Rod
		PH-4326-1	Emerson Power Motor

PART 5 *Worm Gear and Pulley Assembly*

PART NO.	DESCRIPTION	PART NO.	DESCRIPTION
PH-8343	Worm Bearing Casting Assembly	PH-134	Pulley (*Driven*)
PH-141-1	Worm Gear	11501	Pulley (*Motor*)
PH-7111-A	Casting and Bushing Assembly	10651	Motor Belt
		PH-142	Worm Bearing

COIL BANK AND SELECTOR ASSEMBLY • SECTION F

PART NO.	DESCRIPTION	PART NO.	DESCRIPTION
11823-A	Coil Bank & Selector Assembly	10940	Index Elevator Pawl Spring
11822	Coil Bank Assembly	10936-1	Index Elevator
PH-6804	Selector Solenoid Coil	10938	Index Elevator Pawl
PH-6830-1	Selector Key (*Coil Bank*)	12374	Index Elevator Pawl Stud
PH-6806	Selector Key Spring (*Coil Bank*)	10937	Reset Pawl
11517-A	Selector Key Switch Plate Assembly	10943	Reset Pawl Spring
11946-A	Selector Slide and Cancel Plate Assembly	11570-A	Reset Pawl and Dog Assembly
11523	Selector Slide Casting	11324	Reset Dog
11945-A	Selector Assembly Complete	11342	Reset Dog Shaft
11948-A	Selector Slide Assembly	12476	Reset Pawl Guide Stud
PH-4356-1	Selector Slide Stop Retaining Stud	10941	Reset Pawl Stud
PH-4353	Selector Slide Stop Pivot Stud	12288-A	Connecting Link Assembly (*Complete*)
PH-1052	Selector Slide Stop Dog Pin	PH-4731	Connecting Link Stud (*Lower*)
PH-7635	Selector Slide Shaft Assembly	PH-5019	Connecting Link (*Medium*)
PH-1020	Selector Slide Stop Dog	PH-5020	Connecting Link (*Long*)
PH-6225	Selector Slide Return Spring	PH-5018	Connecting Link (*Small*)
11670-A	Selector Slide Guide Assembly (*Right*)	PH-4041	Connecting Link Stud
PH-5998-A	Selector Slide Guide Assembly	11580	Connecting Link Assembly (*Small Inside*)
PH-4354	Selector Slide Stop Cam Roller Stud	12286	Selector Lift Slide
PH-4355	Selector Slide Stop Cam Roller	11604-A	Connecting Link Guide Assembly (*Complete*)
12281-A	Selector Lift Slide and Stud Assembly		
12282-A	Selector Lift Roller Bracket Assembly	12478-A	Tray Unlocking Arm Assembly (*Complete*)
12284	Selector Lift Roller Stud	12474	Tray Unlocking Arm Plate
12285	Selector Lift Roller	PH-6001	Tray Unlocking Arm
PH-4358	Selector Slide Guide (*Left*)	PH-1002-3	Tray Unlocking Cam
PH-1009-2	Selector Slide Roller Bracket	11634-A	Tray Unlocking Cam Assembly
11522	Selector Slide Lift Bracket	PH-1009-2	Tray Driver Adjusting Cam Casting
PH-6811-1	Coil Plunger	PH-8318-1A	Cancel Plate Assembly
PH-7603	Coil Plunger Bracket and Guide Assembly	PH-6608	Cancel Plate Spring Stud
11655	Index Elevator Stop Roller	12379	Cancel Plate Spring
11654	Index Elevator Roller Stud	PH-6280	Cancel Dog
11668-A	Index Elevator Assembly (*Complete*)	PH-6805	Spring for Switch Plate

COIL BANK AND SELECTOR ASSEMBLY • SECTION F (Continued)

PART NO.	DESCRIPTION
11340	Torsion Spring
PH-1127	Spring
PH-5624	Spring
PH-5625	Spring
PH-4343	Spring
10858	Spring (*Extension*)
PH-6807	Plunger Spring (*Coil Bank*)
PH-5606	Counter Pawl
PH-5628	Pawl Pivot Stud
PH-5629	Pawl Safety Spring Stud
PH-7474	Coin Lever Stud
PH-6154	Automatic Selector Shelf Stud
11649	Upper Link Stud
10800	Double Shoulder Stud
11656	Elevator Cam Roller Bracket Assembly
11672	Bracket and Coil Assembly
12420	12 Lug Terminal Strip
11669	Stud

ACCUMULATOR AND SLUG REJECTOR ASSEMBLY • SECTION G

PART NO.	DESCRIPTION
12220-A	Accumulator and Slug Proof Assembly
11399	Accumulator Spring
10757	Three Unit Slug Rejector
12222-A	Coin Connecting Link Assembly
12224-A	Coin Return Link and Roller Assembly
11954	Coin Chute Top
11975	Coin, (*Bent*) Release Lever Roller Stud
11976	Coin, (*Bent*) Release Lever Stop Roller
12226-A	Coin (*Bent*) Release Lever Assembly
11309	Coin Release Lever Spring
10683	Coin Lever Shaft
10674	Coin Trip Lever (*5 cents*)
10675	Coin Trip Lever (*10 cents*)
10676	Coin Trip Lever (*25 cents*)
10732	Coin Lever Spacer (*Inside*)
10731	Coin Lever Spacer (*Outside*)
10715	Coin Chute (*5 cents*)
10714	Coin Chute (*10 cents*)
10713	Coin Chute (*25 cents*)
10827-A	Coin Chute Assembly (*5 cents and 10 cents*)
10826-A	Coin Chute Assembly (*25 cents*)
10681	Coin Chute Plate Spacer
12227-A	Coin Mechanism Cable and Plug Assembly
12228-A	Coin Mechanism Cable
12206	Coin Release Lever Stud
PH-6804	Selector Solenoid Coil (*Long*)
10593	Coil (*Short*)
12459-A	Coil Plunger Assembly (*Short*)
10964-A	Coil Plunger Assembly (*Long*)
10487	Coil Spring
10764	Coil and Armature Assembly (*Complete*)
10735-A	Ratchet Mtg. Plate and Lever Assembly
10902	Ratchet Torsion Spring
10737-A	Ratchet and Hub Assembly (*Complete*)
10739-A	Ratchet (*25 cents*) and Hub Assembly
10646	Ratchet (*5 cents*)
10724	Ratchet Switch Stud
10723	Ratchet Switch Stud Bushing
10738-A	Ratchet (*10 cents*) and Hub Assembly
10647	Ratchet (*ten cents*)
10648	Ratchet (*25 cents*)
11836-A	Ratchet Mtg. Plate and Resistor Assembly
10686	Escapement Pawl
10644	Escapement Lever
10899	Escapement Lever Spring
10725	Escapement Lever Spacer (*Inside*)
10730	Escapement Lever Spacer (*Outside*)
12204	Stud, Grooved Double Shoulder (*Long*)
12205	Stud, Grooved Double Shoulder (*Short*)
10770	Stud, Pivot
10734	Escapement Lever and Tie Bar Assembly
10689	Pawl Extension
10688	Pawl Retainer
10760	Kicker Coil
10687	Kicker Coil Armature
10901	Tension Spring
10900	Retain Lever Spring
10897	Lever Spring (*5 cents and 25 cents*)
10898	Lever Spring
10690	Armature Pawl
10786	Armature and Retainer Assembly
10685	Stop Pin
10680	Tie Bar
10645	Reset Lever
PC-453	Resistor
10967	Blade Switch
11846	Blade Switch
12217-A	Interlocking Switch Assembly
11985-A	Slug Chute
11673	Six Prong Male Plug
11972	Reject Connecting Link
12484	Anti-Cheat Device
12487	Throw Spring
12486	V3-8 Micro Switch
12514-A	Switch and Spring Assembly
PH-3704	Jack Plug

TRAY AND TRAY DRIVER ASSEMBLY • SECTION H

PART NO.	DESCRIPTION
11636-A	Tray and Tray Driver Assembly
PH-6010-1	Tray Support Casting
PH-6007	Tray Support Disc
PH-6214	Tray Latch Spring
PH-1086	Tray Dog Stud
PH-6004	Tray Dog
PH-6000-1	Tray
PH-6005	Tray Support Top Disc
11608	Tray Support
PH-7438	Tray Driver Spring
11521-A	Tray Driver Assembly Complete
PH-6011	Tray Driver Set Screw
11520-A	Tray Driver and Selector Slide Bracket Assembly
11562	Tray Driver
11511	Tray Driver Bushing
11693-A	Tray Release Cap Assembly
11502	Tray Release Cap
11513	Tray Release Spring
11512	Tray Release Screw
12362	Tray Shaft (*20 Records*)
PH-6009	Tray Shaft Retainer
11519-A	Selector Slide Bracket Bushing and Roller Assembly
PH-1009-2	Tray Driver Adjusting Cam Casting
PH-1195	Selector Cam Roller Stud
PH-1196	Selector Cam Roller
PH-1072	Roller Bracket Stud
11500	Record Cover
12427-A	Record Support Disc Assembly
PH-6006-C	Support Disc Comb
11635	Number Clip
11676	Tray Stop
11942-A	Record Disc Grommet
PH-6980	Tray Driver Set Screw

TONE ARM AND BASE ASSEMBLY • SECTION J

PART NO.	DESCRIPTION
11504-A	Tone Arm Base Assembly
11677-A	Tone Arm Base, Pivot Bracket and Shaft Assembly
PH-5080-2	Tone Arm Base
11503	Tone Arm Base and Pin Assembly
7282-A	Tone Arm Pivot Bracket and Shaft Assembly
PH-6053	Tone Arm Adj. Bracket Clamp Screw
12263-A	Tone Arm Adj. Bracket and Spring Assembly
PH-6183	Tone Arm Pushout Spring
PH-6230	Tone Arm Latch Spring
PH-187	Spring
PH-335	Spring
10706	Compression Spring
PH-6046-1	Tone Arm
PH-6185	Tone Arm Latch Stud
PH-6184	Tone Arm Latch
PH-7036-A	Tone Arm Insulation Assembly
PH-6170	Tone Arm Insulator
PH-7724-A	Tone Arm Insulating Wire Assembly
12279-A	Tone Arm Weight Assembly
12278	Tone Arm Counter Weight
11680-A	Tone Arm Wiring Assembly
PH-7707-A	Tone Arm Pickup Cord Assembly
PH-3717	Pickup Cord
PH-3695	Pickup Cartridge (*L-21*)
PH-6245	Pickup Mounting Screw
PH-8384-A	Pickup Shorting Switch Assembly
PH-6680	Pickup Shorting Switch
PH-7723-1A	Tone Arm Pivot Screw Assembly
PH-6049	Tone Arm Pivot Screw
11678	Tone Arm Pivot Screw
PH-1042	Tone Arm Bearing Spacer
11663-A	Tone Arm Switch Bracket Assembly
PH-405-A	Trip Dog and Bracket Assembly
PH-398-A	Trip Dog Assembly
11819-A	Ratchet Disc Assembly (*Complete*)
12302	Ratchet Disc Record Trip
11941-A	Record Trip Lever Assembly
PH-233-2	Record Trip Lever
12300	Record Trip Return Lever
PH-6059	Reject Switch Stop Pin
PH-3543	Tone Arm Micro Switch (*N.C.*)
PH-6196	Micro Switch Lever Pin
PH-7295-A	Micro Switch Lever Assembly
PH-6233	Micro Switch Spring (*Tone Arm*)
12317	Needle
PH-7333	Pickup Needle Screw
PH-406-A	Trip Dog Bracket and Pin Assembly

20 KEY SWITCH ASSEMBLY • SECTION K

PART NO.	DESCRIPTION
11603-A	20 Key Switch Assembly (*Complete*)
11594-A	Socket Mounting Plate Assembly
PH-3733	Socket 6 Prong
12442	Socket and Bracket (Program Holder)
11538	Selector Key Button

MICRO SWITCHES AND OTHER ASSORTED SWITCHES • SECTION L

PART NO.	DESCRIPTION
PH-3543	Tone Arm Micro Switch (*N.C.*)
PH-3544	Power Motor Micro Switch (*N.O.*)
11609	Turntable Micro Switch (*S.P.D.T.*)
12447	Micro Switch (*N.O.*) (*Power Control Panel*)
PH-7295	Micro Switch Lever Assembly
11699-A	Master Switch Lever Assembly
PH-3002	Main Toggle Switch
PH-6680	Pickup Shorting Switch
PH-8384-A	Pickup Shorting Switch Assembly
11846	Blade Switch
11978	S.P.D.T. Switch
11979	D.P.D.T. Switch (*Slide Type*)
10733	Blade Switch
10489	Blade Switch

COIN CHUTE AND CUP ASSEMBLY • SECTION M

PART NO.	DESCRIPTION
12219	Coin Return Cup
12234-A	Lower Coin Chute and Cover Assembly

RECORD COUNTER ASSEMBLY • SECTION N

PART NO.	DESCRIPTION
PH-7012-A	Record Counter Assembly
PH-5601	Counter Disc
PH-5603	Counter Disc Stop
PH-5605	Counter Return Stop
PH-5611	Counter Side Stud
PH-7013-A	Return Stop Bracket Assembly
PH-5623	Spring

CASH BOX ASSEMBLY • SECTION P

PART NO.	DESCRIPTION
12232-A	Cash Box Housing Assembly
12233-A	Cash Box Assembly
ST-7342	Cash Box Lock and Latch

WIRING • SECTION R

PART NO.	DESCRIPTION
12242-A	Power Distribution Panel Assembly (*Complete*)
12243-A	Power Distribution Chassis and Socket Riveting Assembly
11606-A	Power Distribution Cable Assembly (*Complete*)
11978	S.P.D.T. Switch
11979	D.P.D.T. Switch (*Slide Type*)
PH-3002	S.P.S.T. Switch
PH-3270	Two Prong Female Socket
11559	Three Prong Female Socket
PH-3722	Four Prong Female Socket
PH-3740	Five Prong Female Socket
11929	Fifteen Watt Ballast
11980	Twenty Watt Ballast
11551	Transformer
ST-3092	Ten Ampere Fuse
11552	Six Ampere Fuse
PH-3523	Three Ampere Fuse
11556	Starter for Fluorescent Light (*15W*)
11558	Socket for Fluorescent Light Starter

LISTING OF PARTS NUMERICALLY

PART NO.	DESCRIPTION	SECTION
PH-134	Pulley (*Driven*)	E
PH-141-1	Worm Gear	E
PH-142	Worm Bearing	E
PH-187	Spring	J
PH-206-2	Selector Cam Gear Casting (*See No. 11646-A*)	E
PH-233-2	Record Trip Lever	J
PH-335	Spring	J
PH-398-A	Trip Dog Assembly	J
PH-405-A	Trip Dog and Bracket Assembly	J
PH-406-A	Trip Dog Bracket and Pin Assembly	J
PC-453	Resistor	G
PH-1002-3	Tray Unlocking Cam	F
PH-1009-2	Tray Driver Adjusting Cam Casting	F-H
PH-1020	Selector Slide Stop Dog	F
PH-1042	Tone Arm Bearing Spacer	J
PH-1052	Selector Slide Stop Dog Pin	F
PH-1072	Roller Bracket Stud	H
PH-1086	Record Tray Dog Stud	H
PH-1092	Selector Cam Gear Pin	E
PH-1127	Spring	F
PH-1195	Selector Cam Gear Roller Stud	H
PH-1196	Selector Cam Gear Roller	H
PH-1299	Sheets of Program Strips	
PH-1315	Auxiliary Roller	E
PH-1561-A	Selector Cam Gear Collar Assembly	E
PH-3002	Main Toggle Switch	D-L-R
PH-3005	25,000 Ohm Resistor ½ Watt	C
PH-3011	.01 Mfd. 400 Volt Condenser	C
ST-3059	Lamp (*28 Volt*)	B
ST-3092	10 Amp. (*Main*) Fuse	D-R
PH-3094	.004 Mfd. 400 Volt Condenser	C
PH-3102	.02 Mfd. 400 Volt Tubular Condenser	C
PH-3107	25W 120V Frosted Lamp	B
PH-3117	250,000 Ohm ½ Watt Resistor	C
PH-3123	7½ W. 120 V. White Lamp	B
PH-3161	Tube Socket 5U4G	C
PH-3162	Tube Socket 6L6G	C
PH-3164	5 Prong Socket "SPK"	C
PH-3165	4 Prong Socket "PU"	C
PH-3173	1,000 Ohm 10 Watt Resistor	C
PH-3177	50 Mfd. 50 Volt Condenser	C
PH-3190	5U4G Tube	C
PH-3191	6L6G Tube	C
PH-3270	2 Prong Female Socket	D-R
PH-3505	6J5G Tube	C
PH-3508	5,000 Ohm Resistor ½ Watt	C
PH-3511	.0075 Mfd. 1600 V. Condenser	C
PH-3514	.0005 Mfd. 400 Volt Condenser	C
PH-3523	3 Amp. Cartridge Fuse	C-D-R
PH-3535	2,500 Ohm Resistor ½ Watt	C
PH-3543	Tone Arm Micro Switch (*N. C.*)	J-L
PH-3544	Power Motor Micro Switch (*N. O.*)	E-L
PH-3584	Plug (*4 Prong Male*)	B
PH-3593	5 Prong Male Plug	B
PH-3680-1	Bass Control (*50,000 Ohm*)	C
PH-3681-1	Treble Control (*100,000 Ohm*)	C
PH-3682-1	Filter Choke	C
PH-3683	Output Transformer	C
PH-3684-1	Input Transformer	C
PH-3685-5	Power Transformer	C
PH-3686-2	Dual Volume Control 2 Meg. (*50,000 Ohm*)	C
PH-3695	Pickup Cartridge (*L-21*)	J
PH-3704	Jack Plug	G
PH-3717	Pickup Cord	J
PH-3722	4 Prong Female Socket	D-R
PH-3723-2A	Speaker Terminal Strip Assembly	C
PH-3725	Extra Speaker Control (*L-Pad*)	C
PH-3723	8 Prong Socket Red	C
PH-3733	6 Prong Socket	K
PH-3740	5 Prong Female Socket	D-R
PH-3776	6J5G Tube Socket	C
PH-3874	Porcelain Shell Socket	B
PH-3879	5 Wire Ratproof Cable (*100 Ft.*)	
PH-4041	Connecting Link Stud	F
PH-4302	Spring	E
PH-4326-1	Power Motor (*Emerson*)	E
PH-4343	Selector Slide Stop Spring	F
PH-4353	Selector Slide Stop Pivot Stud	F
PH-4354	Selector Slide Stop Cam Roller Stud	F
PH-4355	Selector Slide Stop Cam Roller	F
PH-4356-1	Selector Slide Stop Retaining Stud	F
PH-4358	Selector Slide Guide	F
PH-4731	Connecting Link Stud—Lower	F
PH-4738	Selector Cam Washer	E
PH-5006-1	Follow Cam	E
PH-5007-3	Turntable Cam	E
PH-5009	Lift Arm Slide Guide	E
PH-5018	Connecting Link—Small	F
PH-5019	Connecting Link—Medium	F
PH-5020	Connecting Link—Long	F
PH-5034	Cam Spacer Stud	E
PH-5080-2	Tone Arm Base	J
PH-5356	Volume Control Key	J
ST-5412	Front Door Support Roller (*See No. 12471-A*)	
PH-5601	Counter Disc	N
PH-5603	Counter Disc Stop	N
PH-5605	Counter Return Stop	N
PH-5606	Counter Pawl	F
PH-5611	Counter Side Stud	N
PH-5623	Spring	N
PH-5624	Counter Pawl Spring	F
PH-5625	Counter Pawl Spring	F
PH-5628	Pawl Pivot Stud	F
PH-5629	Pawl Safety Spring Stud	F
PH-5998-A	Selector Slide Guide Assembly	F
PH-6000-1	Tray	H
PH-6001	Tray Unlocking Arm	F
PH-6004	Record Tray Dog	H
ST-6005	Caster	A
PH-6005	Tray Support Disc	H
PH-6006-C	Support Disc Comb	H
PH-6007	Tray Support Disc	G
PH-6009	Tray Driver Shaft Retainer	H
PH-6010-1	Tray Base Support Casting	H
PH-6011	Tray Driver Set Screw	H
PH-6017	Worm Gear Spacer	E
PH-6019	Turntable Shaft Washer	E

PART NO.	DESCRIPTION	SECTION
PH-6020	Lift Arm Pivot Bracket	E
PH-6021	Shaft Return Clamp	E
PH-6022	Slide Mounting Arm	E
PH-6023	Turntable Lift Roller	E
PH-6027	Pivot Bracket Stud	E
PH-6032-1	Turntable Lift Arm	E
PH-6033	Turntable Lift Roller Screw	E
PH-6034	Lift Arm Pivot Stud	E
PH-6036	Lift Arm Spring	E
PH-6046-1	Tone Arm	J
PH-6049	Tone Arm Pivot Screw	J
PH-6053	Tone Arm Adj. Brkt. Clamp Screw	J
ST-6053	Caster Socket	A
PH-6059	Reject Switch Stop Pin	J
PH-6084	Tone Arm Lever	E
PH-6085	Tone Arm Push Rod Stud	E
PH-6089	Reject Lever	E
PH-6095	Reject Lever Stud	E
PH-6096	Tone Arm Push Rod	E
PH-6098	Tone Arm Mtg. Stud	E
PH-6099	Tone Arm Lever Pivot Stud	E
PH-6154	Automatic Selector Shell Stud	F
PH-6170	Tone Arm Insulator	J
PH-6183	Tone Arm Pushout Spring	J
PH-6184	Tone Arm Latch	J
PH-6185	Tone Arm Latch Stud	J
PH-6196	Micro Switch Lever Pin	E-J
PH-6208	Floating Plate Washer	C
PH-6214	Tray Dog Spring	H
PH-6225	Selector Slide Return Spring	F
PH-6230	Tone Arm Latch Spring	J
PH-6231	Extension Spring	E
PH-6232	Extension Spring	E
PH-6233	Tone Arm Micro Switch Spring	E-J
PH-6245	Pickup Mtg. Screw	J
PH-6280	Cancel Dog	F
PH-6599	Lift Arm Spring Pin	E
PH-6608	Cancel Plate Spring Stud	F
PH-6680	Pickup Shorting Switch	J-L
PH-6804	Selector Solenoid Coil	F-G
PH-6805	Switch Plate Spring	F
PH-6806	Selector Key Spring (*Coil Bank*)	F
PH-6807	Plunger Spring (*Coil Bank*)	F
PH-6811-1	Coil Plunger	F
PH-6830-1	Selector Key (*Coil Bank*)	F
PH-6846	Record Reject Plunger	E
PH-6980	Tray Driver Set Screw	H
PH-7012-A	Record Counter Assembly	B-N
PH-7013-A	Return Stop Bracket Assembly	N
PH-7036-A	Tone Arm Insulation Assembly	J
PH-7111-A	Casting and Bushing Assembly	E
PH-7167-A	Reject Lever Assembly	E
PH-7282-A	Tone Arm Pivot Bracket and Shaft Assembly	J
PH-7295-A	Micro Switch Lever Assembly	E-J-L
PH-7333	Pickup Needle Screw	J
ST-7342	Cash Box Lock and Latch	P
ST-7349-1	Front Door Lock and Key (*D-032*) less Latch	
	Latch only for ST-7349-1	B
ST-7350-1	Back Door Lock and Key (*D-032*) less Latch	
	Latch only for ST-7350-1	
	Key only (*D-032*)	
	Key only (*G-451*)	
PH-7438	Tray Driver Spring	H
PH-7474	Coin Lever Stud	F

PART NO.	DESCRIPTION	SECTION
PH-7603-A	Coil Plunger Spring Retainer Assy.	F
PH-7635-A	Selector Slide Shaft Assembly	F
PH-7707-A	Tone Arm Pickup Cord Assembly	J
PH-7723-1A	Tone Arm Pivot Screw Assembly	J
PH-7724-A	Tone Arm Insulating Wire Assembly	J
PH-8305-A	Amplifier Speaker Plug and Wire Assembly	C
PH-8318-1A	Cancel Plate Assembly	F
PH-8343-A	Worm Bearing Casting Assembly	E
PH-8384-A	Pickup Shorting Switch Assembly	J-L
ST-9013	Door Button	
10461	Spring Stud	E
10471	Turntable Adjusting Spring	E
10487	Coil Spring	G
10489	Interlock Reset Switch	L
10534-1	A.C. Rip Cord & Male Plug, 24"	
10540	.04 Mfd. 400 Volt Condenser	C
10574	24 Prong Plug	
10575	24 Prong Socket	
10593	Short Coil	G
10644	Escapement Lever	G
10645	Reset Lever	G
10646	5c Ratchet	G
10647	10c Ratchet	G
10648	25c Ratchet	G
10651	Motor Belt (*Large*)	E
10674	5c Coin Trip Lever	G
10675	10c Coin Trip Lever	G
10676	25c Coin Trip Lever	G
10680	Tie Bar	G
10681	Coin Chute Plate Spacer	G
10683	Coin Lever Shaft	G
10685	Stop Pin	G
10686	Escapement Pawl	G
10687	Kicker Coil Armature	G
10688	Pawl Retainer	G
10689	Pawl Extension	G
10690	Armature Pawl	G
10706	Compression Spring	J
10713	25c Coin Chute	G
10714	10c Coin Chute	G
10715	5c Coin Chute	G
10723	Ratchet Switch Stud Bushing	G
10724	Ratchet Switch Stud	G
10725	Escapement Lever Spacer (*Inside*)	G
10730	Escapement Lever Spacer (*Outside*)	G
10731	Coin Lever Spacer (*Outside*)	G
10732	Coin Lever Spacer (*Inside*)	G
10733	Coin Switch	L
10734-A	Escapement Lever and Tie Bar Assembly	G
10735-A	Ratchet Mtg. Plate, Lever & Relay Assembly	G
10737-A	5c Ratchet and Hub Assembly complete	G
10738-A	10c Ratchet and Hub Assembly	G
10739-A	25c Ratchet and Hub Assembly	G
10757-A	3 Unit Slug Rejector Assembly	G
10760	Kicker Coil (*14 Ohm*)	G
10764-A	Accumulator Reset Relay	G
10770	Pivot Stud	G
10786-A	Armature and Retainer Assembly	G
10800	Double Shoulder Stud	F
10802	Tray Unlocking Arm Plate	F
10826-A	25c Coin Chute Assembly	G
10827-A	5c and 10c Coin Chute Assembly	G
10858	Extension Spring	F

PART NO.	DESCRIPTION	SECTION
10859	1 Meg Ohm ½ Watt Resistor	C
10890	12 Lug Terminal Strip	D
10897	5c and 25c Lever Spring	G
10898	10c Lever Spring	G
10899	Escapement Lever Spring	G
10900	Retain Lever Spring	G
10901	Tension Spring	G
10902	Ratchet Tension Spring	G
10925	12 Lug Connecting Strip	
10936-1	Index Elevator Casting	F
10937-1	Reset Pawl	F
10938	Index Elevator Pawl	F
10939	Index Elevator Pawl Stud	F
10940	Index Elevator Pawl Spring	F
10941	Reset Pawl Stud	F
10943	Reset Pawl Spring	F
10964-A	Long Coil Plunger Assembly	G
10965-A	Short Coil Plunger Assembly. (*See No. 12459-A*)	G
10967	Blade Switch	G
11309	Coin Release Lever Spring	G
11324	Reset Dog	F
11340	Torsion Spring	F
11342	Reset Dog Shaft	F
11399	Accumulator Spring	G
11500	Record Cover	H
11501	Motor Pulley	E
11502	Tray Release	H
11503-A	Tone Arm Base and Pin Assembly	J
11504-A	Tone Arm Base Assembly	J
11511	Tray Driver Bushing	H
11512	Tray Release Screw	H
11513	Tray Release Spring	H
11514	Tray Shaft (*See No. 12362*)	H
11517-A	Selector Key Switch Plate Assembly (*See No. 12560-A*)	F
11519-A	Tray Driver Adj. Cam Assembly	H
11521-A	Tray Driver Assembly Complete	H
11522	Selector Slide Lift Bkt.	F
11523	Selector Slide Casting	F
11531	"Thank You" Glass Holder (*See No. 12440*)	A
11532	"Thank You" Glass Holder Lock Clip	B
11533	"Thank You" Glass	A
11534	Program Holder Bkt. & Socket (*See No. 12442*)	B
11538	Selector Key Button	K
11541	Counter Drive Stud	A
11543	Counter Cable	E
11548-A	Turntable Lever Assembly Complete	E
11551	Transformer	D-R
11552	6 Amp. Fuse	D-R
11555	Fuse Holder	D
11556	Starter for Fluorescent Light (*15 Watt*)	D-R
11558	Socket for Fluorescent Light Starter	D-R
11559	3 Prong Female Socket	D-R
11562	Tray Driver	H
11563	Tone Arm Push Rod Slide Stud	E
11570-A	Reset Pawl and Dog Assembly	F
11579	200 Ohm Relay (*3 Blade Switch*)	C
11580	Connecting Link Small Inside	F
11585-A	Mechanism Cable Assembly	E
11586	3 Prong Male Plug and Shell	E
11587-A	Mechanism Cable and Shell Assembly	
11594-A	Socket Mtg. Plate Assembly	B-K
11603-A	20 Key Switch & Cable Assembly	K
11604-A	Connecting Link Guide Assembly (*Complete*)	F
11606-A	Power Distribution Cable Assembly (*Complete*)	D-K
11608	Tray Support	H
11609	Turntable Micro Switch (S.P.D.T.)	E-L
11617	Switch Timing Disc	E
11618	Switch Timing Disc Plate	E
11619	Tone Arm Reset Lever	E
11621	Tone Arm Reset Lever Assembly	E
11622	Chassis Mtg. Spring (*Upper*) Rear	E
11632	Cam Shaft	E
11634-A	Tray Unlocking Cam Assembly	F
11635	Numeral Clips	H
11636-A	Tray Stack and Driver Assembly	H
11642	Auxiliary Roller Stud	E
11643	Tone Arm Return Roller Stud	E
11644	Roller Bracket Stud	E
11646-A	Selector Cam and Roller Assembly	E
11647-A	Lift Cam Assembly	E
11648-A	Selector Cam & Lift Assembly	E
11649	Upper Link Stud	F
11654	Index Elevator Roller Stud	F
11655	Index Elevator Stop Roller	F
11656-A	Elevator Cam Roller & Bracket Assembly	F
11663-A	Tone Arm Switch Bracket Assembly	J
11664-A	Index Elevator Assembly Complete	F
11669	Stud	F
11670-A	Selector Slide Guide Assembly Right	F
11671	Index Elevator Shaft	
11672-A	Bracket and Coil Assembly	F
11673	6 Prong Male Plug	G
11676	Tray Stop	H
11677-A	Tone Arm Base, Pivot Bracket & Shaft Assembly	J
11678	Tone Arm Pivot Screw	J
11680-A	Tone Arm & Wiring Assembly	J
11693-A	Tray Release Cap Assembly	H
11697-A	Cam Shaft Support and Switch Assembly	E
11698-A	Cam Shaft Support Assembly Complete	E
11699-A	Master Switch Lever Assembly	E-L
11806	Turntable Washer	E
11810	Spring Clamp Handle Stud	E
11819-A	Ratchet Disc Assembly Complete	J
11821-A	Turntable Assembly	E
11822-A	Coil Bank Assembly	F
11823-A	Coil Bank and Selector Assembly	F
11824	Reject Rod Support	E
11827	Speaker (*See No. 12457 P.M. Speaker*)	C
11836-A	Ratchet Mtg. Plate and Resistor Assembly	G
11838-A	Spring Clamp Handle Assembly	E
11846	Blade Switch	G-L
11892	Fluorescent Light Lampholder	B
11896	Duplex A. C. Outlet	B
11899	Front Door Color Cylinder Motor (L.H.)	B
11903	Fluorescent Tube (*15W*) (*Obtain Locally*)	A
11929	15 Watt Ballast	D-R
11935-A	"Thank You" Glass and Holder Assy. (*See No. 12439-A*)	

PART NO.	DESCRIPTION	SECTION
11938	Record Support Disc (*See No. 12477-A*)	H
11939	Constant Speed Motor	E
11941-A	Record Trip Lever Assembly	J
11942-A	Record Disc Grommet	H
11945-A	Selector Assembly Complete	F
11946-A	Selector Slide and Cancel Plate Assy.	F
11948-A	Selector Slide Assembly	F
11950-A	Tray Unlocking Arm Assembly Complete	F
11954	Coin Chute Top	G
11955	Key Plate	A
11959	Turntable Shaft	E
11965-A	Support Angle & Bracket Assembly (*R.H.*)	E
11966-A	Support Angle & Bracket Assembly (*L.H.*)	E
11967	16Mfd. Filter Condenser (Plug in Type)	C
11968	Front Tie Rod	E
11970	8-8-8 Filter Condenser (Plug in Type)	C
11972	Reject Connecting Link	G
11975	Bent Coin Release Lever Roller Stud	G
11976	Bent Coin Release Lever Stop Roller	G
11978	S.P.D.T. Switch	D-L-R
11979	D.P.D.T. Switch (*Slide Type*)	D-L-R
11980	20 Watt Ballast	D-R
11981	Reject Rod	E
11982	Mechanism Mounting Plate	E
11985	Slug Chute	G
11987-A	Cabinet Light Assembly	B
11989-A	Center Cylinder Pivot and Stud Assembly	B
11995	Front Door Color Cylinder Motor (*R.H*)	B
12027-A	Color Cylinder Assembly (*Side—R.H.*)	B
12028-A	Color Cylinder Assembly (*Side—L.H.*)	B
12032-A	Side Color Cylinder Cable & Bracket Assembly (*R.H.*)	B
12035-A	Fluorescent Side Cylinder Bracket Assembly (*R.H.*)	A
12039-A	Side Color Cylinder Cable & Bracket Assembly (*L.H.*)	B
12042-A	Program Light Assembly Complete	B
12043-A	Program Light Cable Assembly	B
12044-A	Color Cylinder Assembly (*Center—L.H.*)	B
12045-A	Color Cylinder Assembly (*Center—R.H.*)	B
12052	Cylinder Drive Spring	B
12053	Fluorescent Tube (*20 Watt*)	A
12059-A	Rock-Ola Escutcheon & Plastic Assembly	B
12060	Rock-Ola Escutcheon Only	
12061	Top Metal Moulding	A
12062	Side Metal Moulding	A
12064-A	Reject Key Bracket Assembly	B
12065	Reject Key Shaft	A
12066	Coin Release Spring	A
12067	Front Door Glass	B
12068-A	Locking Lever Assembly	A
12073	Upper Right Grille	A
12074	Upper Left Grille	A
12075	Lower Right Grille	A
12076	Lower Left Grille	A
12078	Grille Cellulose Acetate	A
12079-A	Grille Screen Assembly	B
12080	Grille Cloth	A
12081	Grille Screen	
12082-A	Door Pilaster Inside Reflector Assembly (*R.H.*)	B
12083-A	Door Pilaster Inside Reflector Assembly (*L.H.*)	B
12087-A	Program Holder Front with Select Glass Assembly	A
12088-A	Program Holder Front Assembly	A
12091-A	Program Holder (*Rear*) Spring Lock Assembly	B
12095	Rear Top Ventilating Screen	
12096	Front Door Ventilating Screen	
12097	Back Door Bottom Ventilating Screen	B
12098	Inside Top Trim (*R.H.*)	B
12200	Cabinet Background	B
12203	Reject Key Bracket	
12204	Grooved Double Shoulder Stud (*long*)	G
12205	Grooved Double Shoulder Stud (*short*)	G
12206	Coin Release Lever Stud	G
12211	Accumulator Mounting Bracket	
12217	Interlocking Switch Assembly	G
12219	Coin Return Cup	B-M
12220-A	Coin Mechanism and Accumulator Assembly	G
12222-A	Coin Connecting Link Assembly	G
12224-A	Coin Return Link and Roller Assembly	G
12226-A	Bent Coin Release Lever Assembly	G
12227-A	Coin Mechanism Cable and Plug Assembly	G
12228-A	Coin Mechanism Cable Assembly	G
12232-A	Cash Box Housing Assembly	P
12233-A	Cash Box Assembly	P
12234-A	Lower Coin Chute and Cover Assembly	M
12238-A	Model "0" Amplifier (*Without Tubes*) Assembly	C
12242-A	Power Distribution Panel Assembly Complete	D-L
12243-A	Power Distribution Chassis & Socket Assembly	D-L
12246	Front Door Roller Guide	
12249-A	Fluorescent Side Cylinder Bracket Assembly (*L.H.*)	B
12252	Chassis Mtg. Spring (*Upper*) Front	E
12263-A	Tone Arm Adj. Bracket & Spring Assembly	J
12264	Cap Top Support Rib	A
12267	Cap Side Support Rib—(*R.H., Metal*)	A
12268	Cap Side Support Rib—(*L.H., Metal*)	A
12270	Top Center Catalin	A
12271	Catalin Cap (*Left Hand*)	A
12272	Left Top Half Pilaster	A
12273	Left Bottom Half Pilaster	A
12274	Catalin Cap (*Right Hand*)	A
12275	Right Top Half Pilaster	A
12276	Right Bottom Half Pilaster	A
12278	Tone Arm Counter Weight	J
12279-A	Tone Arm Weight Assembly	J
12281-A	Selector Lift Slide and Stud Assembly	F
12282-A	Selector Lift Roller Bracket Assembly	F
12284	Selector Lift Roller Stud	F
12285	Selector Lift Roller	F
12286	Selector Lift Slide	E
12288	Connecting Link Assembly Complete	F
12289	Lift Arm Slide Roller	E
12290	Slide Roller Pin	E

PART NO.	DESCRIPTION	SECTION
12291	Lift Arm Slide Roller Stud	E
12292	Mounting Arm Pin	E
12293	Selector Lift Roller Assembly	E
12295	Cap Moulding (*Metal*)	A
12297	Plastic Catalin Support Strip	A
12300	Record Trip Return Lever	J
12302	Ratchet Disc Record Trip	J
12312	Counter	E
12313-A	Counter Cable Assembly	E
12314-A	Counter & Bracket Assembly	E
12317	Phonograph Needle	J
12335-A	Front Door Grille Assy. Complete	
12336	Russell Power Motor	E
12337-A	Background Reflector & Flexglass Assembly (*large*)	B
12338-A	Background Reflector & Flexglass Assembly (*small*)	B
12361	Motor Condenser (*5 Mfd. 330 V.A.C.*)	E
12362	Tray Shaft	H
12374	Index Elevator Pawl Stud	F
12379	Cancel Plate Spring	F
12384	Back Door Top Ventilating Screen	B
12385-A	Cable & Plug Assembly for Kit No. 1.	
12388	Inside Top Trim (*L.H.*)	B
12407-A	Cable & Plug Assembly for Kit No. 2.	
12408-A	Cable & Plug Assembly for Kit No. 3.	
12416-A	Program Light Bkt. Assembly (*R.H.*)	B
12417-A	Program Light Bkt. Assembly (*L.H.*)	B
12421	Glass Retainer Top	
12422	Glass Retainer Bottom	
12423	Inside Cleat Trim	B
12427-A	Record Support Disc Assembly	H
12440	"Thank You" Glass Holder	A
12442	"Thank You" Lamp Socket & Bracket	K
12443	Chassis Mtg. Spring (*Lower*)	E
12447	Micro Switch (*Normally Open*)	D-L
12457	P.M. Speaker	B-C
12458	"Thank You" Glass Gasket	A
12459-A	Short Coil Plunger Assembly	G
12471-A	Bkt. & Roller Assembly (*Front Door*)	A
12472-A	Center Color Cylinder Cable & Bkt. Assembly	B
12474	Tray Unlocking Arm Plate	F
12476	Reset Pawl Guide Stud	F
12478-A	Tray Unlocking Arm Assembly Complete	F
12483	Decal (*1 for 10c—3 for 25c*)	
12484	Anti Cheat Device	
12487	Throw Spring	
12486	Micro Switch (*V3-8*)	
12503	Fluorescent Socket	B
12512-A	End Cylinder Bkt. & Motor Mtg. Assembly (*R.H.*)	B
12513-A	End Cylinder Bkt. & Motor Mtg. Assembly (*L.H.*)	B
12514-A	Switch & Spring Assembly	
12560	Selector Key Switch Plate Assembly	F
20198M	Front Door Frame	
20208	Glass Moulding	
20292	Front Door Center Grille (*Wood*)	A
20322	Catalin Block	