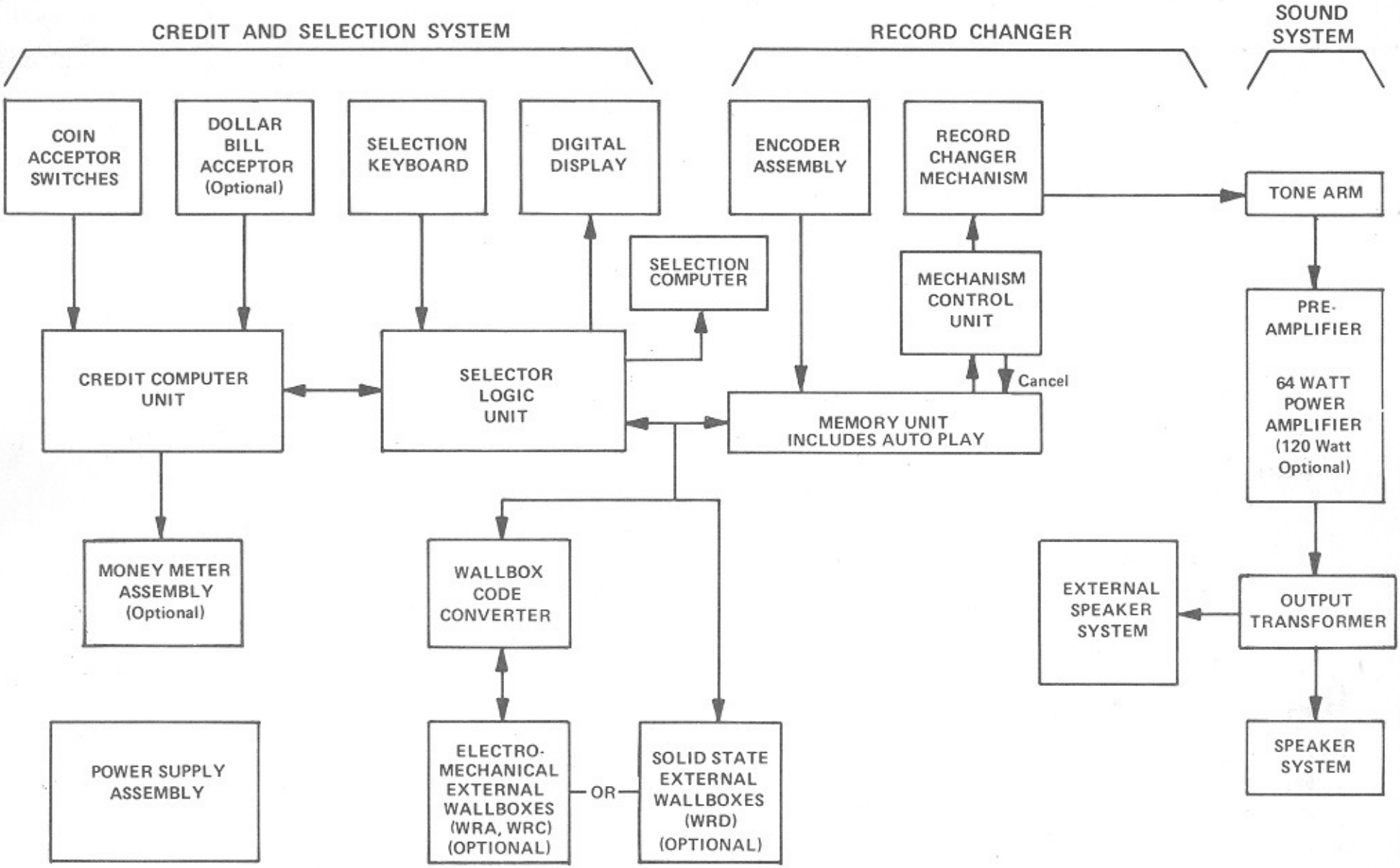

SYSTEM BLOCK DIAGRAM

SECTION 1 - OVERALL SYSTEM MAINTENANCE

INTRODUCTION

The information in Part II of this publication is intended for personnel with electronic service experience who prefer to service their own equipment instead of returning circuit modules to the factory. Keep in mind that modules can be damaged by improper maintenance procedures. Rowe will assume no responsibility for such damage. If you're not sure of what you are doing, don't even take the cover off; send the module back to the factory for repair.

SERVICING PROCEDURES

The module package consists of a printed circuit board sandwiched between a metal mounting plate and a protective plastic cover. A foam pad between the circuit board and mounting plate insulates and cushions the board. Always replace the pad after servicing the board to prevent the foil side of the board from shorting against the mounting plate.

Remove the plastic cover by squeezing the edges inward until they clear the metal tabs on the mounting plate.

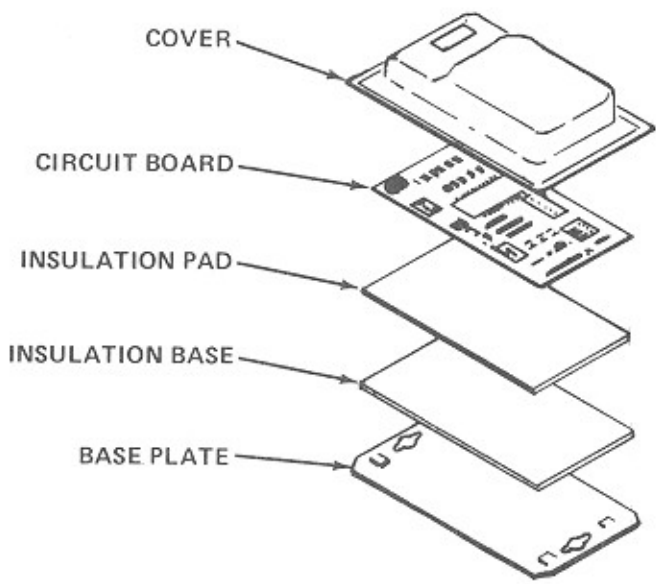

FIGURE 2-1. TYPICAL MODULE PACKAGE ASSEMBLY

PRECAUTIONS

The MOS chips have an extremely high input resistance (typically on the order of 10^{10} [10,000,000,000] ohms.) Due to this high input impedance, they can be damaged by high static charges. Care should be taken when handling circuit boards removed from the protective module package to avoid conditions where the board may be exposed to static discharges.

IC PIN LOCATIONS

When looking at IC from top, with indexing mark to your left, pin no. 1 is at lower left. Indexing mark may be notch or dimple.

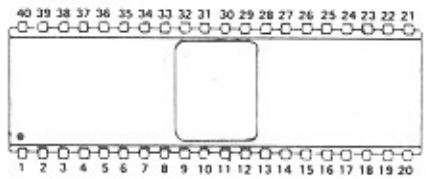

CREDIT CHIP AND SELECTOR DISPLAY CHIP

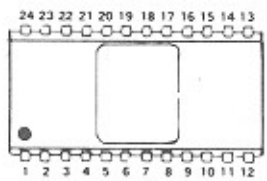

MEMORY CHIP

14 PIN PACKAGE

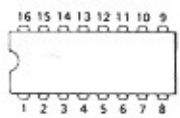

16 PIN PACKAGE

FIGURE 2-2. INTEGRATED CIRCUIT PIN LOCATION

TESTING DISCRETE TRANSISTORS

Test transistors using a volt-ohm-milliameter as follows:

1. Set the meter function switch to OHMS and the range switch to a medium scale (such as X10 on Simpson 260).

2. Connect ohmmeter to transistor leads to check NPN silicon transistors as follows:

NOTE

SOME METERS USE THE BLACK OR NEGATIVE LEAD AS THE POSITIVE LEAD FOR OHMS SCALE, TRIPLET BEING ONE OF THESE.

+ to emitter - to collector	- no reading
+ to collector - to emitter	- no reading

+ to base
- to collector - low reading (about 500 ohms)

+ to collector
- to base - no reading

+ to emitter
- to base - no reading

+ to base
- to emitter - low reading (about 500 ohms)

3. With positive meter lead on collector and negative lead on emitter, touch base to collector. Check that the meter shows a low reading to indicate that the transistor is conducting.

4. All previous tests indicate a good transistor. Any deviation from these conditions indicates a defective transistor.

5. For PNP transistors, reverse the polarities and proceed as in the previous steps.

TESTING DARLINGTON POWER TRANSISTORS

Test Darlington transistors using a volt-ohm-milliameter as follows:

1. Set the meter function switch to ohms, and the range switch to X1 (on Simpson 260) for scale.

2. Connect ohmmeter to transistor leads to check NPN silicon Darlington power transistors as follows:

NOTE

SOME METERS USE THE BLACK OR NEGATIVE LEAD AS THE POSITIVE LEAD FOR OHMS SCALE, TRIPLET BEING ONE OF THESE.

+ to emitter
- to collector - Low reading

+ to collector
- to emitter - No reading

+ to base
- to collector - Low reading

+ to collector
- to base - No reading

+ to emitter
- to base - No reading

+ to base
- to emitter - Low reading

3. With positive meter lead on the collector and negative lead on emitter, touch the base to the collector. Check that the meter shows a low reading to indicate that the transistor is conducting.

4. For PNP transistors, reverse the polarities and proceed as in the previous steps.

TESTING SILICON DIODES

Test silicon diodes as follows:

1. Set the meter function switch to OHMS and the range switch to a medium scale.

2. Connect the diode as shown.

NOTE

CONNECTIONS MAY VARY WITH VARIOUS TYPES OF METERS. THE IMPORTANT THING TO REMEMBER IS THAT THE DIODE SHOULD INDICATE NO READING WITH THE LEADS CONNECTED ONE WAY AND A LOW READING WHEN CONNECTED IN THE OPPOSITE POLARITY.

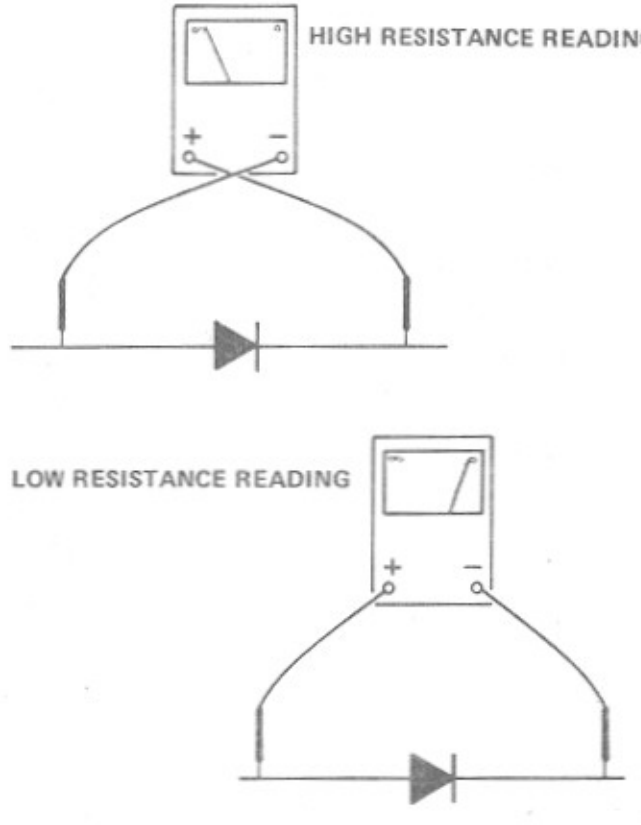

FIGURE 2-3. DIODE TEST HOOK-UP

REPLACING DARLINGTON POWER TRANSISTORS

Fuses mounted on driver boards on underside of amplifier serve a diagnostic function; an open fuse indicates a failed darlington power transistor, Q1 or Q2. Replace only the transistor adjacent to the open fuse. Use the following procedure:

64 Watt Amplifier

1. Replace open fuse and retest. If new fuse blows, continue as follows:
2. Remove phillips head screw and nut holding transistor to heat sink.
3. Pull transistor from socket, being sure to retain mica insulator under transistor.
4. Apply Thermal Joint Compound (Rowe Spec 53) to BOTH sides of mica insulator and place insulator against heat sink.
5. Plug new transistor into socket and replace screw and nut. One of the major causes of darlington failure is loose mounting screws. Be sure that screw is tight for proper heat transfer.

CAUTION

DIRECT CONTACT BETWEEN OUTPUT TRANSISTOR AND HEAT SINK WILL DESTROY TRANSISTOR. INSULATE AS DIRECTED.

6. Install new 3 amp fuse.

SOLDERING AND UNSOLDERING IC DEVICES

Integrated circuits, due to their fragile nature, require different soldering techniques than for discrete (individual) components. Improper soldering could also damage the circuit boards.

There are many devices on the market for soldering and unsoldering IC circuits. The following text describes some of the available devices. However, the technician will usually develop his own preferences.

Soldering irons for use with integrated circuits are available in many varieties. Simple versions are nothing more than a handle with a screw-in heating element and tip. Others include thermostatically controlled heating units. The selection of a soldering iron will be at the preference of the technician. However, the important thing to keep in mind is that the tip temperature should not exceed 750° (35W max.). Also the tip should be shaped to permit unsoldering of a single IC lead, if necessary, without heating adjacent components or pins. To prevent the introduction of leakage voltage into the circuit from the soldering iron, the tip should be grounded. This is accomplished by connecting a ground wire to the soldering iron holder or touching the tip of the iron to a grounded surface before using.

The simplest unsoldering tool is the wick or braid-type solder remover. Wound on a spool, it's a metal mesh that acts as a solder blotter. In use, a half-inch of the braid is placed on the joint and heat is applied for a period of one second per IC pin. Once the braid sucks up the solder, the iron and braid are removed together revealing a free joint. The wick is available in various widths.

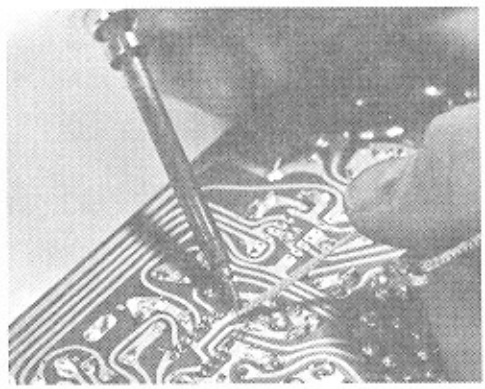

FIGURE 2-4. USING BRAID TYPE SOLDER REMOVER

While braids work by capillary action, sippers and suckers draw solder with a vacuum. The simplest device in this category is a rubber bulb which inhales molten solder. The tip is made of Teflon, a plastic that won't combine with solder or suffer heat damage.

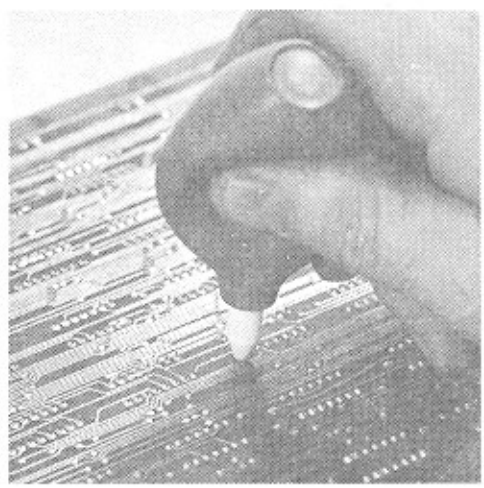

FIGURE 2-5. USING VACUUM BULB WITH TEFLON TIP

To use the bulb, squeeze it closed and then, when the solder melts, release it - vacuum does the rest. Since flowing solder cools and solidifies very quickly inside the bulb, it sometimes chokes the tip. Clear it with a wire. An advantage of the bulb is that it can be used in tight corners.

Soldering irons incorporating bulbs are also available. The major advantage of these devices is the convenience of one hand operation.

Be sure to discharge waste solder trapped inside the bulb after each joint is cleaned. Be careful on the discharge since it comes out of the tool as a fine spray of solder when the bulb is squeezed. Direct the spray into a metal container. Never press the bulb while applying the soldering iron to a solder joint or you'll spray the joint and nearby area with bits of solder that may cause short circuits. Finally, never reuse solder. Oxidation and loss of flux will almost certainly make a bad joint.

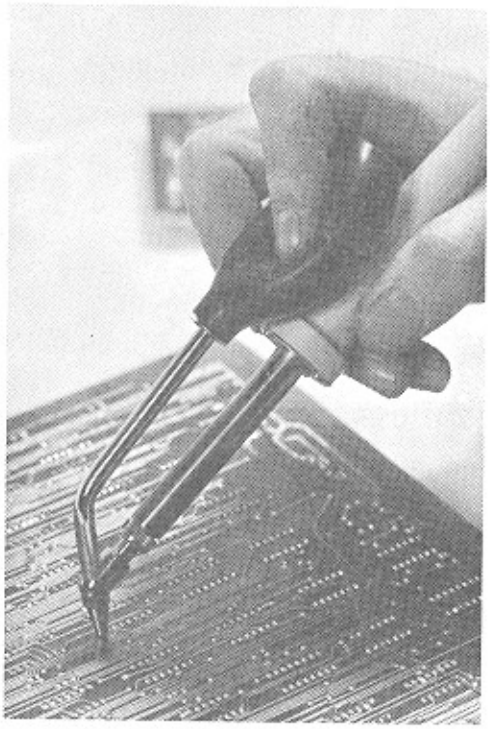

FIGURE 2-6. COMPONENT REMOVAL USING COMBINATION IRON AND SOLDER SUCKER

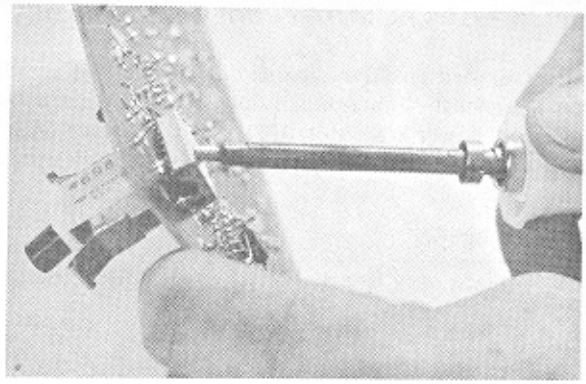

FIGURE 2-7. SPECIAL IRON TIP HEATS ALL IC PINS AT ONCE WHILE SPRING-LOADED REMOVAL TOOL LIFTS IC FROM BOARD

When isolating one part of an IC package, the recommended procedure is to cut the lead as close as possible to the board. Miniature cutters are recommended for this purpose. Bend the lead up, away from the board.

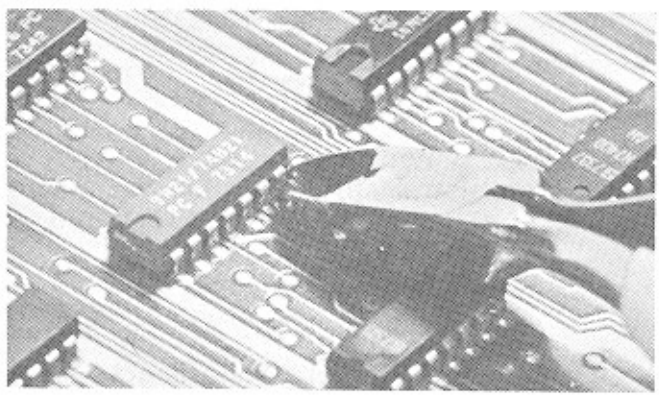

FIGURE 2-8. ISOLATING SINGLE PIN OF IC

To place the isolated section back in operation, bend the lead back down and solder in place. Use a thin 0.22-gauge 60/40 tin-lead solder. The thin gauge solder will melt and flow more freely thus requiring less application of heat.

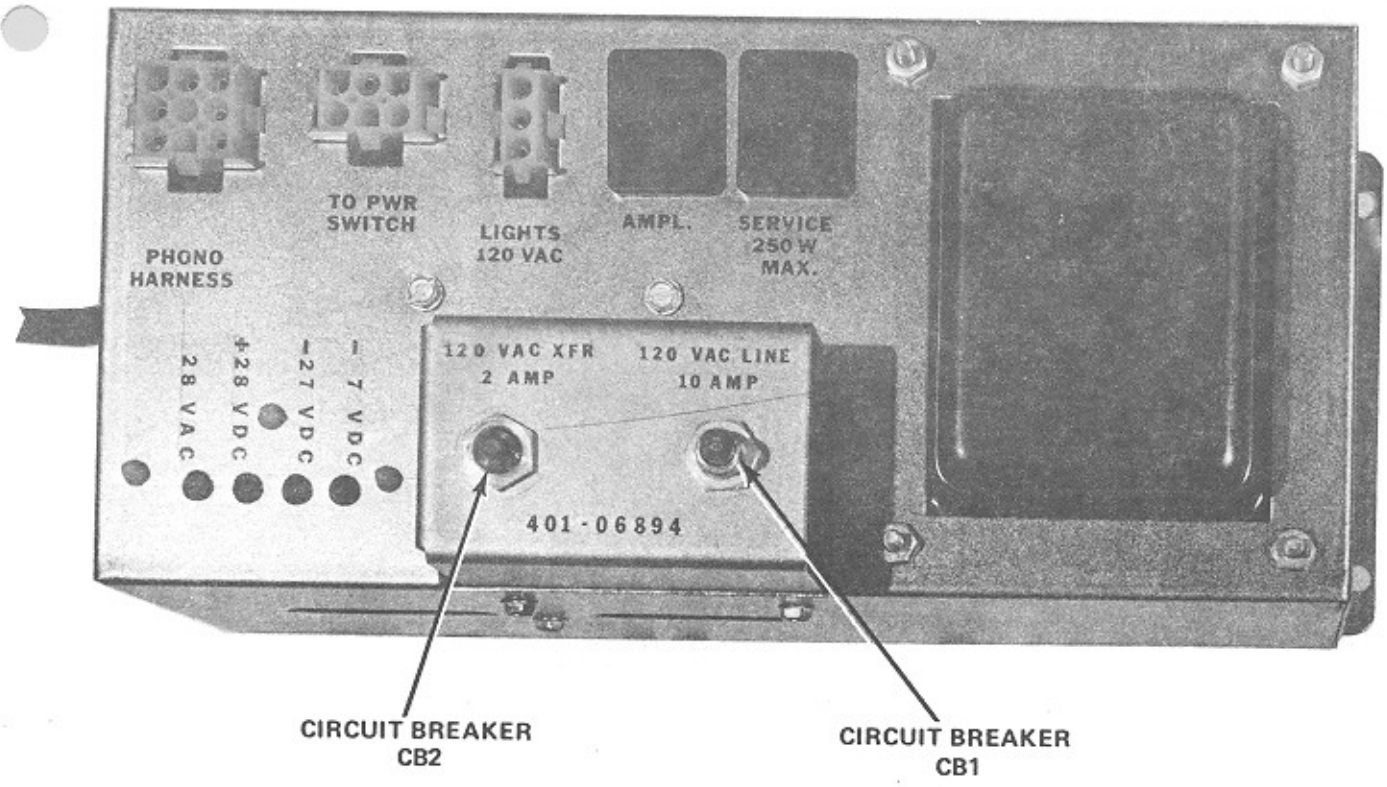

FIGURE 2-9. MAIN POWER SUPPLY

MAIN POWER SUPPLY (See figures 2-9, 2-11)

The main power supply distributes unregulated +28 VDC and 28 VAC, and regulated -27 VDC and -7 VDC power to phonograph components. Power is controlled by a toggle switch located on the access door at the rear of the cabinet. 120-volt AC receptacles are provided for the amplifier, lights, accessories and service equipment. The AC receptacles and transformer primary are protected by 10 amp circuit breaker CB1, while circuit breaker CB2 protects the transformer primary only. Both the circuit breakers can be reset from the front panel.

The step-down transformer incorporates four secondary windings, each corresponding to one of the four output voltages (+28 VDC, 28 VAC, -27 VDC and -7 VDC). Each secondary passes directly to the phonograph harness. Three identical full wave bridge rectifiers convert the AC secondary voltage to DC charging filter capacitors C1004, C1005 and C1006.

Integrated circuit Z1001 provides voltage regulation for the -27 VDC circuit (top of schematic). The regulator drives transistor Q1006 which, in turn, drives Q1002 to supply the necessary current. If output current draw should become excessive, Q1007 is turned on. This removes the drive to Q1006, cutting current flow to protect the circuit.

The -7 VDC and +28 VDC supplies are unregulated, other wise operation is similar to the -27 VDC circuit described previously. Transistors Q1005 and Q1009 provide overload protection. LED's indicate the presence of voltage.

SEQUENCE OF OPERATION

The sequence of operation diagrams which follow illustrate the circuits which are active during each point in the phonograph operational cycle.

Since the circuit chips are digital devices, the pins are at one of two states in each sequence diagram:

Q = Quiescent
A = Active

The voltage for each chip pin in both the Q and A states is listed on the schematic diagram and referenced in the text.

Most of the voltages indicated can be measured with an inexpensive VOM.

FOR THIS SECTION, SELECT **VIEW**(TOP TOOL BAR),THEN CLICK ON **PAGE LAYOUT**,THEN **FACING**

(1) QUARTER INSERTED. STANDARD CREDIT ESTABLISHED.

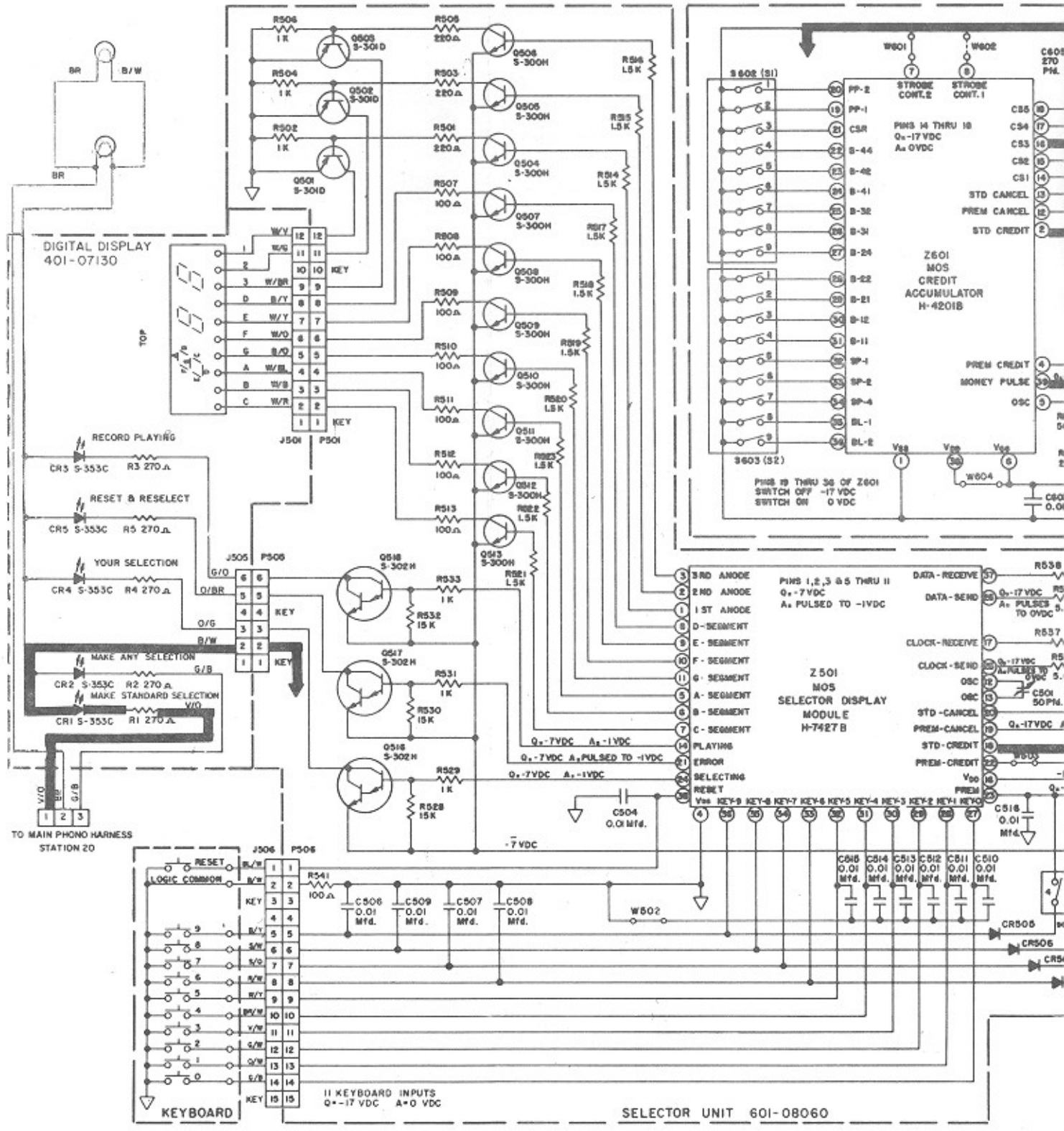

1. QUARTER INSERTED. STANDARD CREDIT ESTABLISHED.

Credit computer pricing is set to one play for a quarter coin, standard price.

1. The quarter passes through the slug rejector operating the 25¢ coin switch lever to close the 25¢ coin switch.

2. The 25¢ coin switch connects pin 16 of the credit computer chip to COMMON through C612, R616 and R614.

3. Money pulses (-17vdc to 0vdc) are sent out on p chip to Q603 which drives the optional money

4. A standard credit signal (-27 vdc to 0 vdc) at p chip drives Q602 which lights the MAKE STA This signal also appears at pin 18 of the selecto

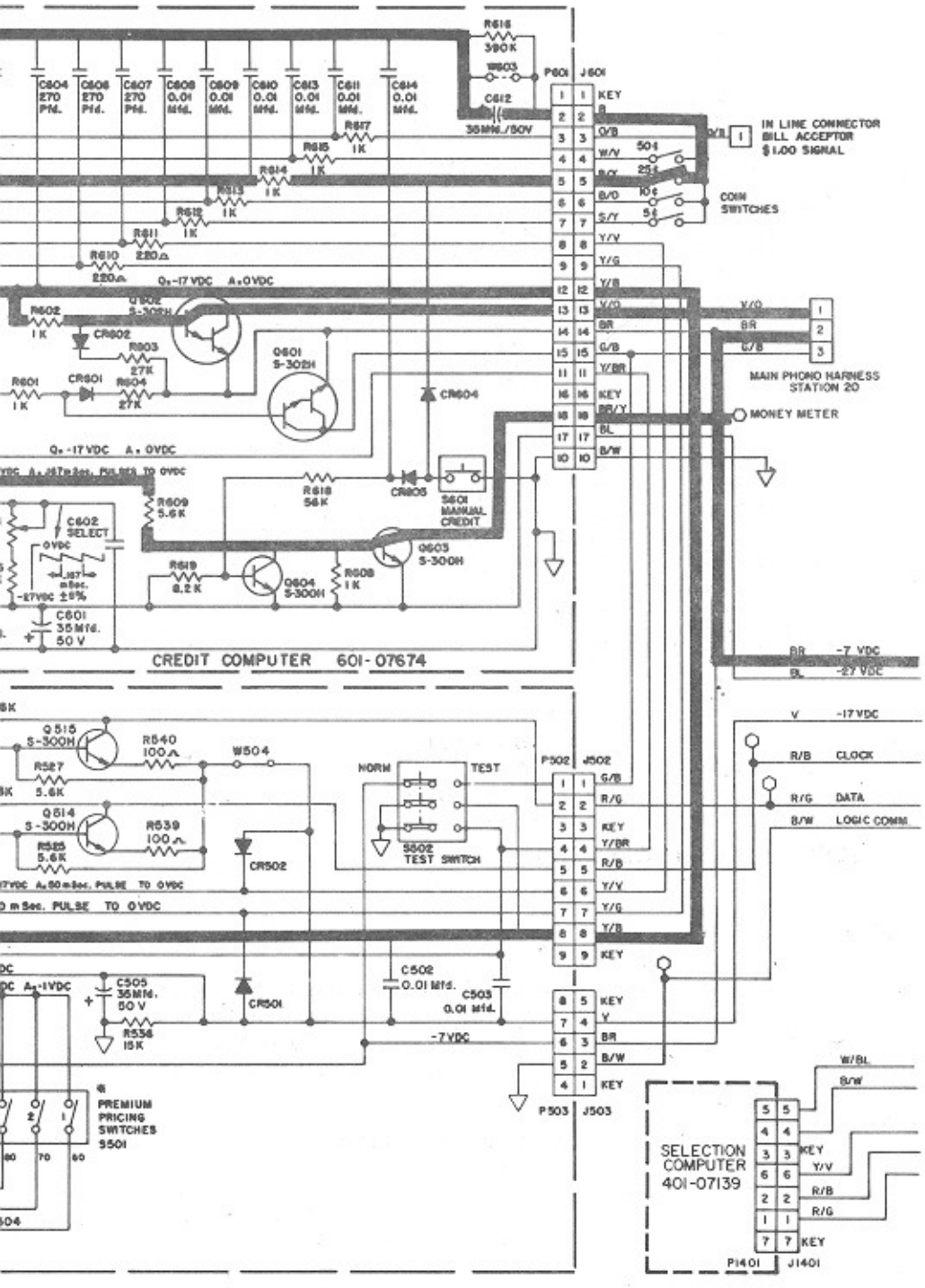

EQUIVALENT ENGINEERING DRAWING 6-08500-01-Q-2 [A]

39 of the credit computer
eter assembly; five pulses=25¢.

2 of the credit computer
DARD SELECTION LED.
ship.

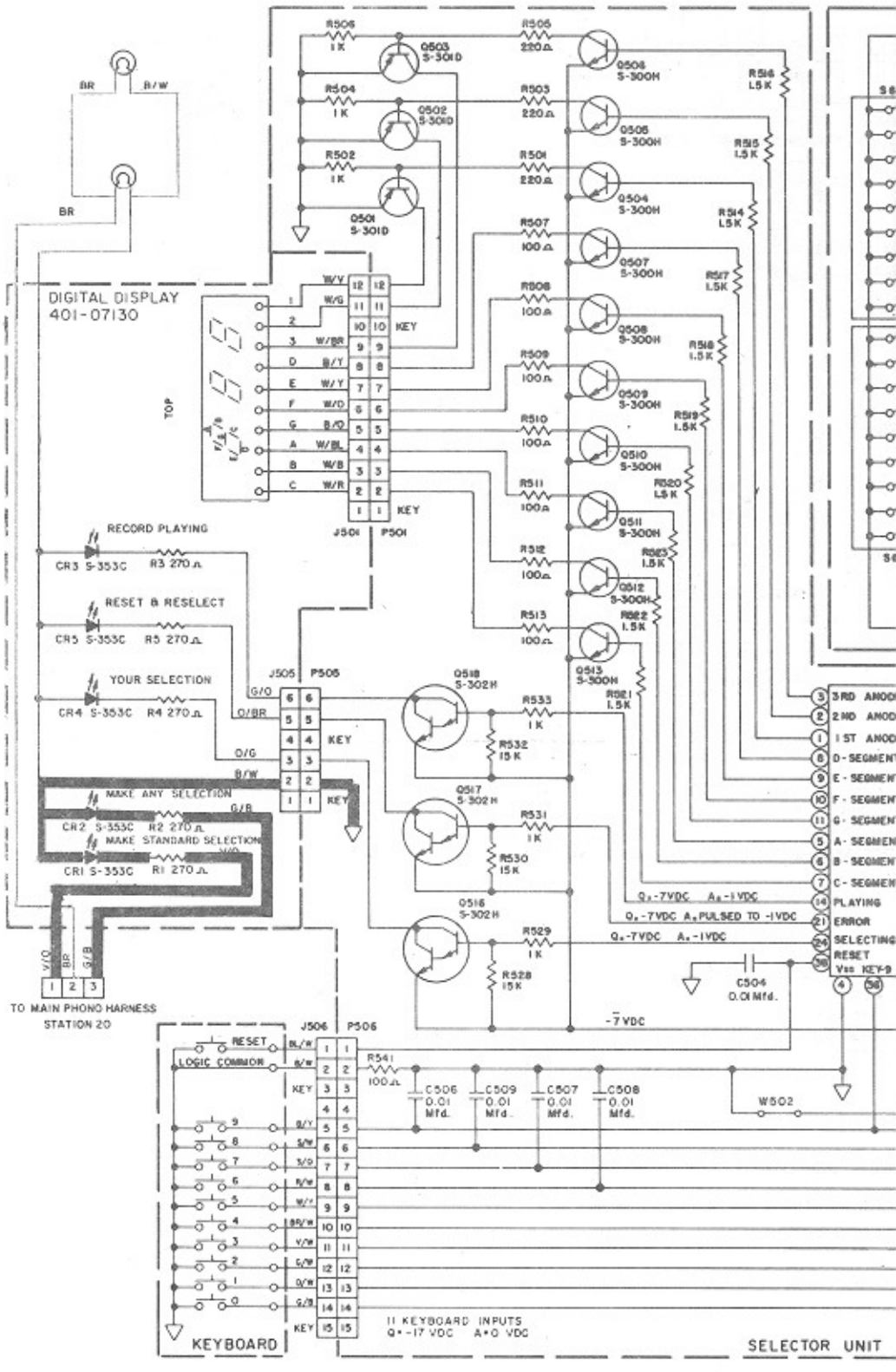

2. HALF-DOLLAR INS

1. If a half-dollar coin is dep
credit computer chip to C

2. The MAKE STANDARD S
previous sequence.

② HALF-DOLLAR INSERTED. PREMIUM CREDIT ESTABLISHED.

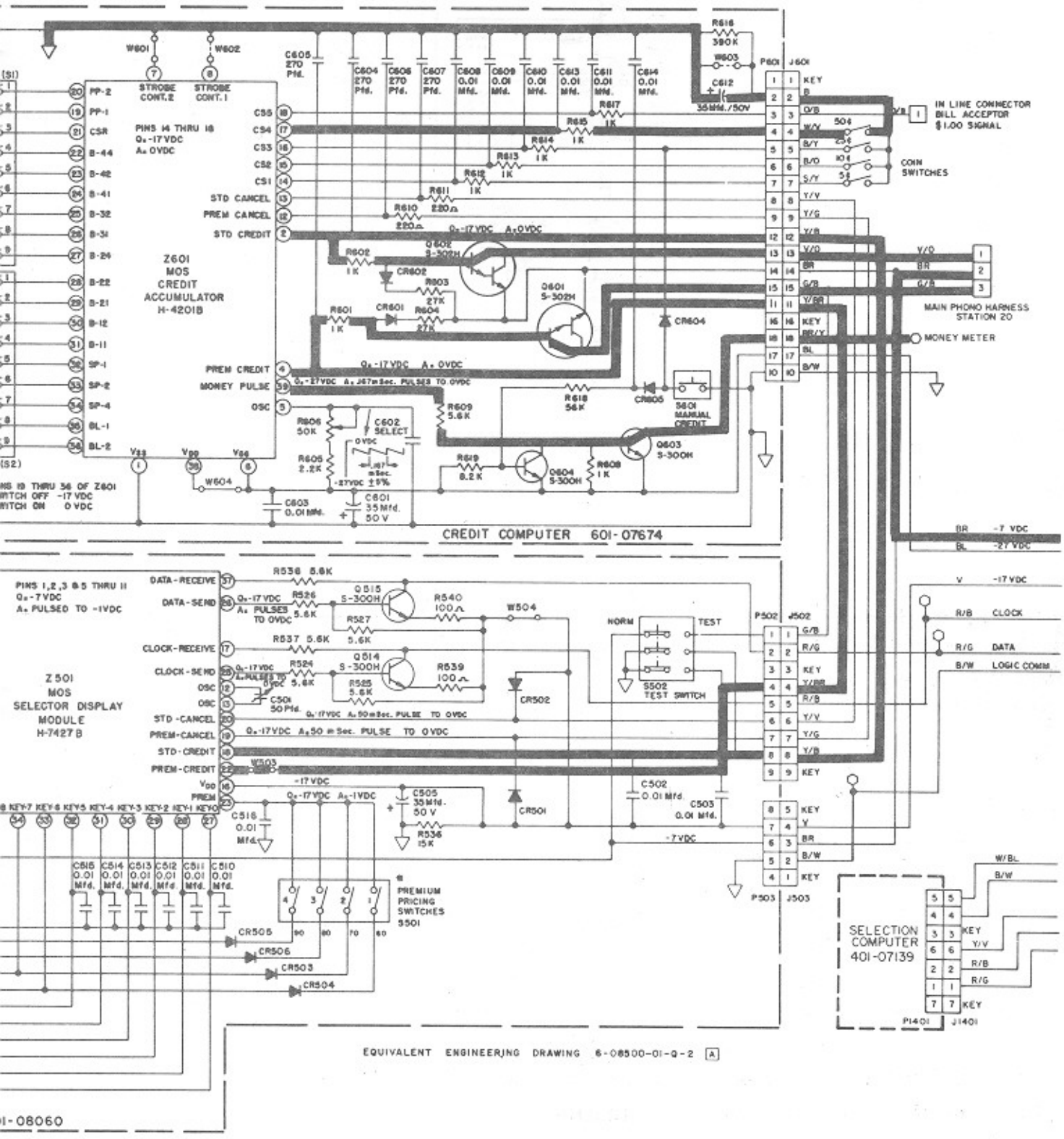

RTED. PREMIUM CREDIT ESTABLISHED.

ited, the 50¢ coin switch connects pin 17 of the MON through R615, R616, and C612.

LECTION LED is lit in the same manner as the

3. A premium credit signal (-17 vdc to 0 vdc) at pin 4 of the credit computer chip drives Q601 which lights the MAKE ANY SELECTION LED. This pulse also appears at pin 22 of the selector chip.

(3.) CREDIT BUTTON PUSHED. CREDIT ESTABLISHED.

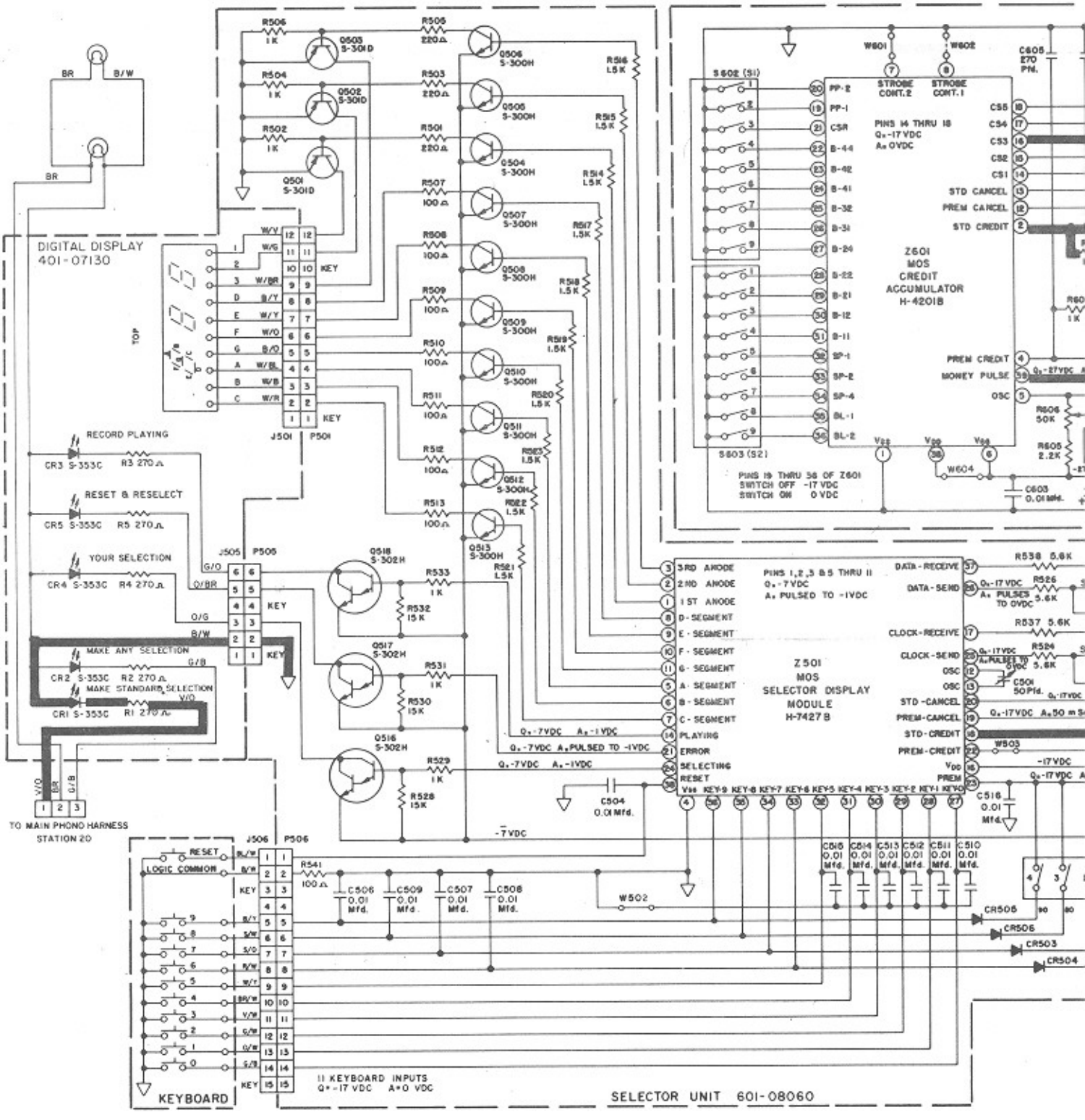

3. CREDIT BUTTON PUSHED. CREDIT ESTABLISHED.

1. Pressing manual credit pushbutton S601 on the credit computer simulates a 25¢ credit by connecting pin 16 of the credit computer chip to COMMON through diode CR604.

2. Money pulses (-17vdc to 0vdc) are tied to COMMON through R609, Q604 and R618 to prevent credit from registering on the optional money meter.

3. A standard credit signal (-17 vdc to 0 vdc) at pin 2 c
chip drives Q602 which lights the MAKE STANDA
This signal also appears at pin 18 of the selector chi

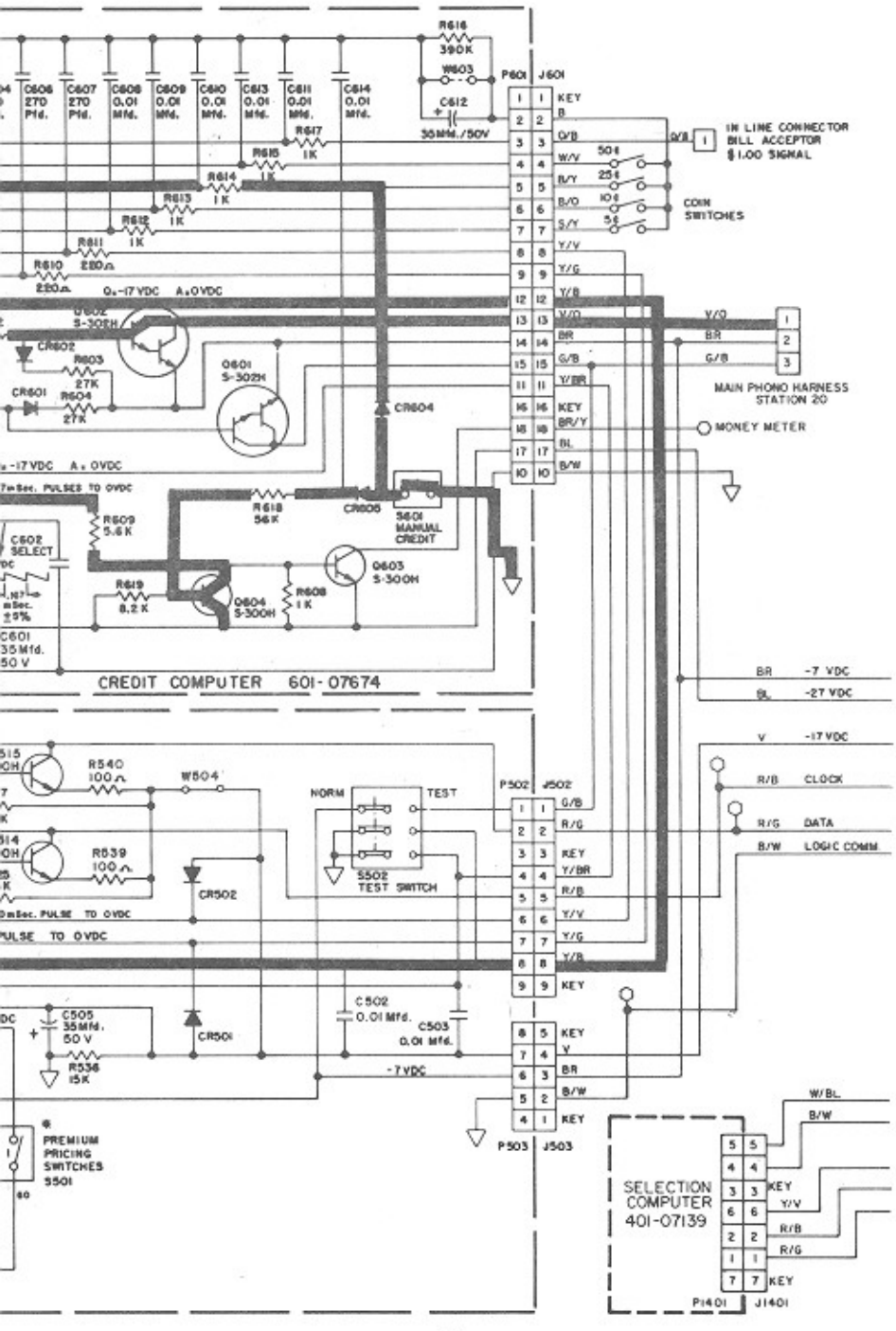

EQUIVALENT ENGINEERING DRAWING 6-08500-01-Q-2 [A]

he credit computer
SELECTION LED.

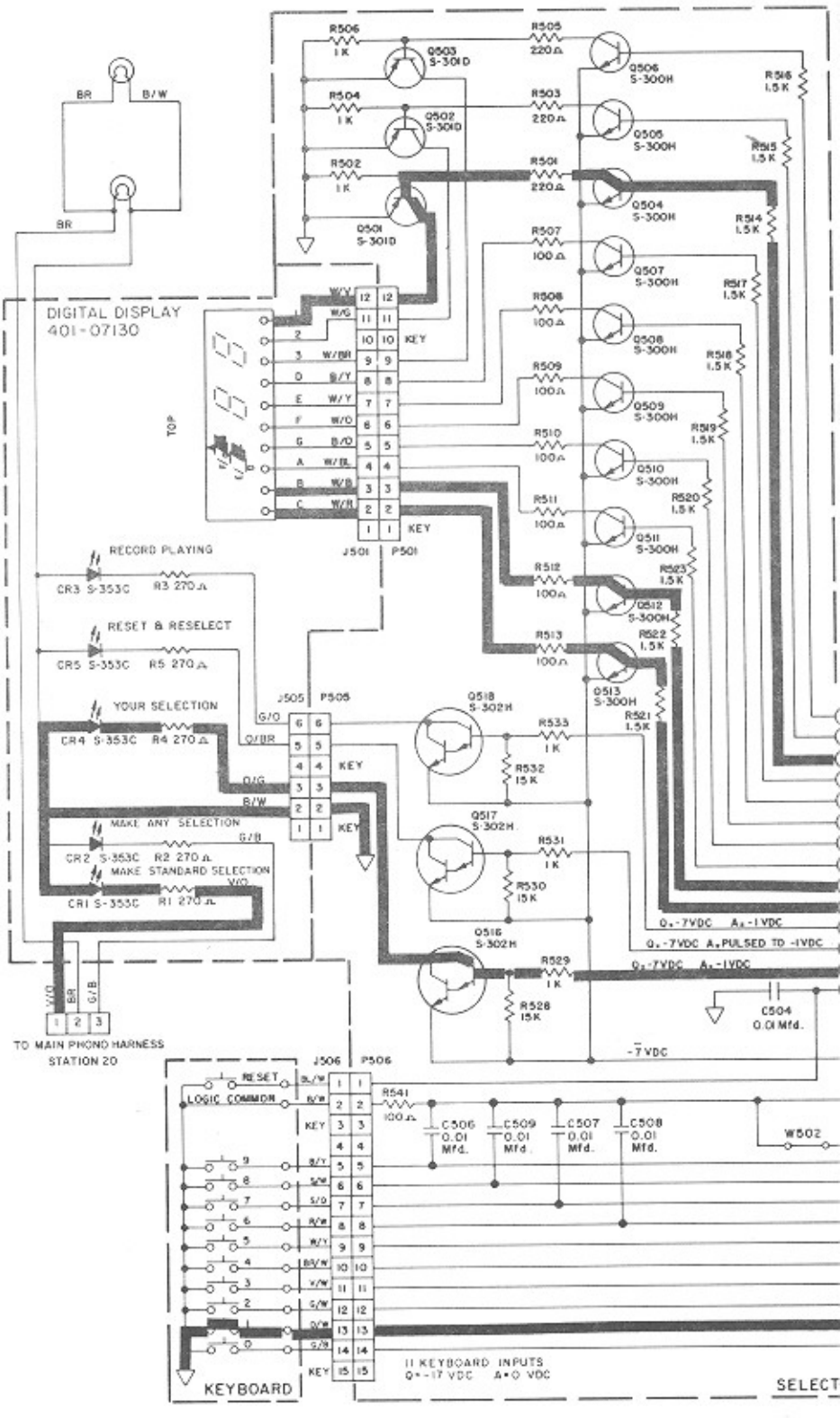

4. FIRST DIGIT SELECTED AND DISPLAYED.

Only the numbers 1 and 2 corresponding to the selection group right and left side can be chosen for the first digit. If another digit such as 0 or 3 through 9 is chosen, the RESET AND RESELECT LED will blink. In this instance, the RESET pushbutton must be pressed before making an alternate selection for the first digit.

Each of the three n
light emitting diodes
together electrically
Each pulse is synchr
or third display unit
not appear to be blir
by the observer.

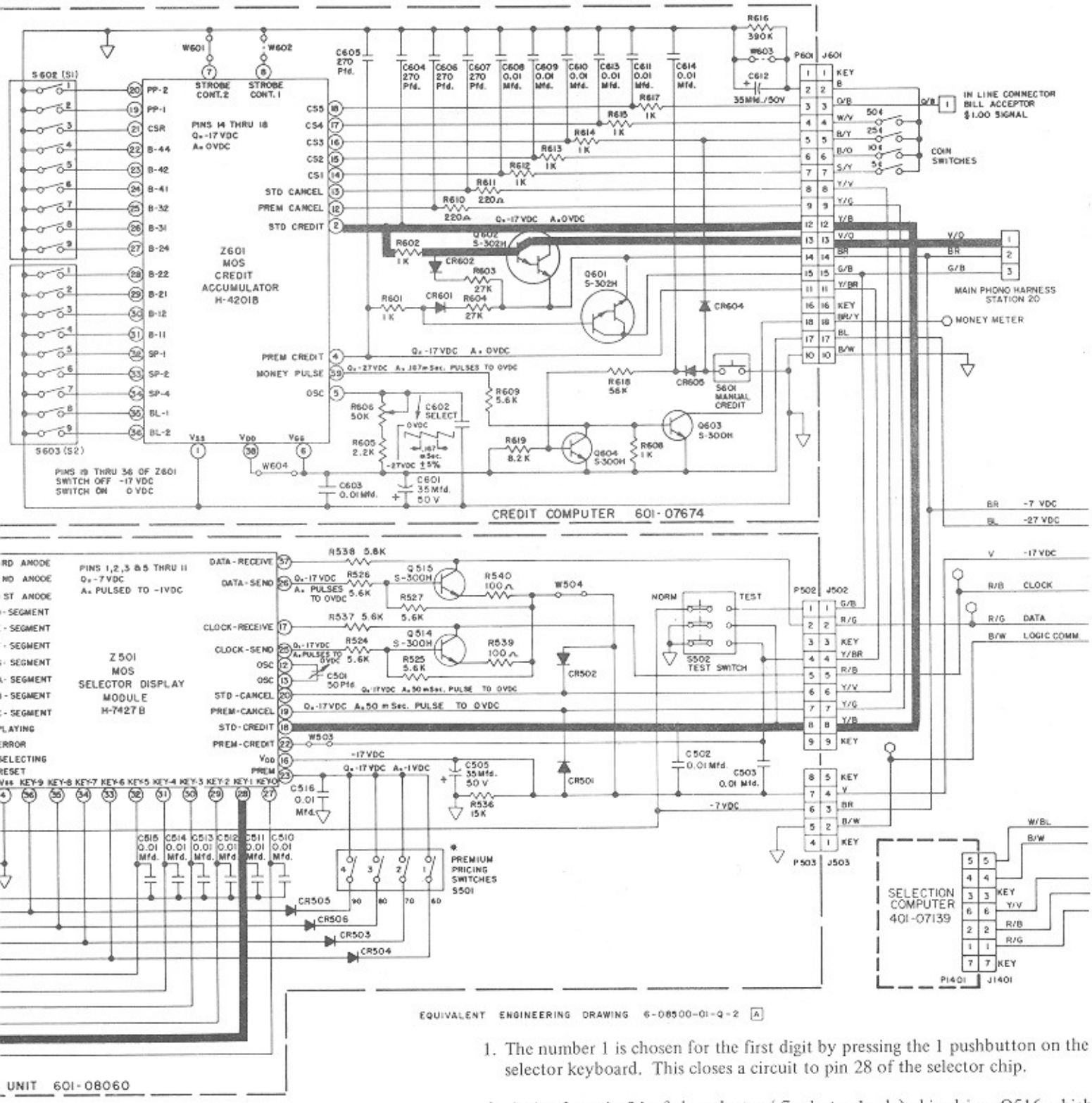

ber display units consist of seven segments illuminated by The equivalent segments of the three display units are tied d are scanned left to right by pulses from the selector chip. ized to light the appropriate segment in the first, second o produce the composite number image. The segments do ng due to the high scan speed and the persistence of vision

1. The number 1 is chosen for the first digit by pressing the 1 pushbutton on the selector keyboard. This closes a circuit to pin 28 of the selector chip.

2. A signal at pin 24 of the selector (-7 vdc to -1 vdc) chip drives Q516 which lights the YOUR SELECTION LED.

3. The signal at selector chip pin 1 (-7vdc to -1vdc) drives Q504 and Q501 which codes the signal for the first display unit.

4. Signals (-7vdc to -1vdc) at pins 6 and 7 of the selector chip drive Q512 and Q513 respectively, lighting the B and C segments of the first display unit during the scan to produce the number 1.

(5) SECOND DIGIT SELECTED AND DISPLAYED.

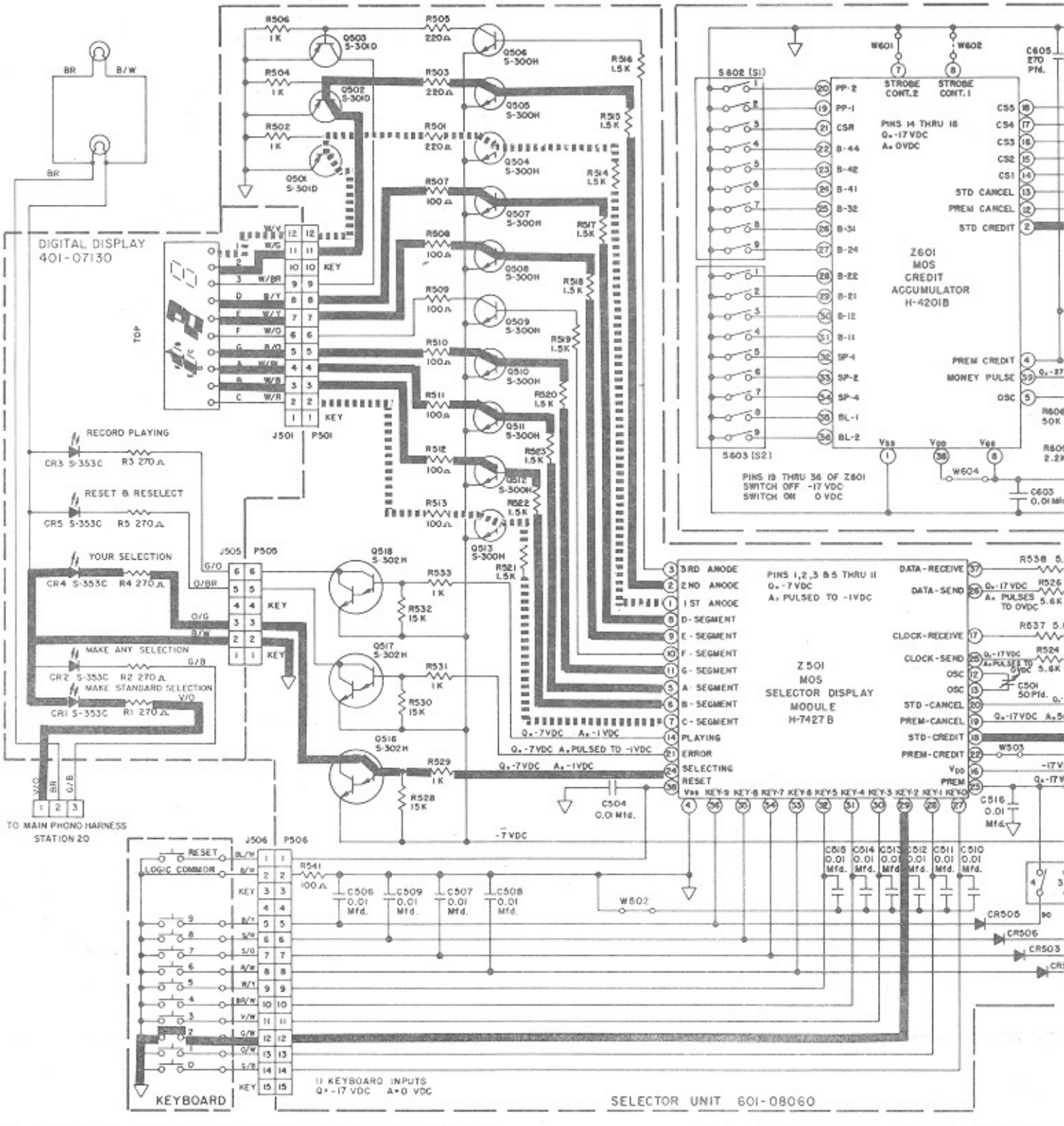

5. SECOND DIGIT SELECTED AND DISPLAYED.

The second digit chosen can be any number, 0 through 9 corresponding to the second number of the available record selections.

1. The number 2 is chosen for the second digit by pressing the corresponding pushbutton of the selector keyboard.

2. The signal (-7vdc to -1vdc) at selector chip pin 2 drives Q505 and Q502 which codes the signal for the second digit.

3. Signals (-7vdc to -1vdc) at pins 5, 6, 11, 9 Q511, Q512, Q510, Q508 and Q507 respec D segments of the second display unit during t

NOTE: If one or more of the premium price swi the second digit represented by those switches mium selection is attempted, premium credit credit is not available, the RESET AND RES further selection digits will be accepted. In th be pressed and the entire selection must be re

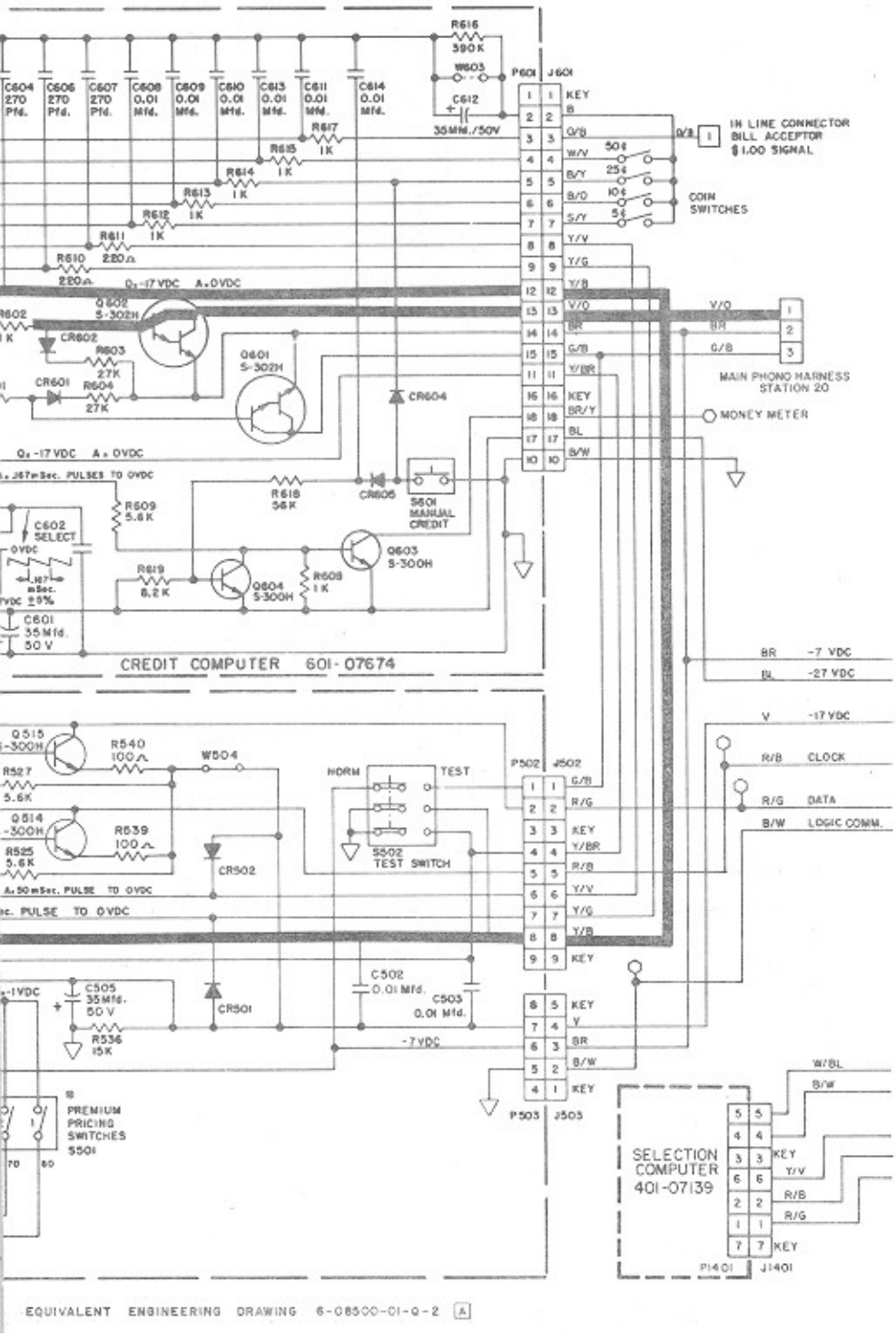

EQUIVALENT ENGINEERING DRAWING 6-08500-01-Q-2 A

1 8 of the selector chip drive
y, lighting the A, B, G, E and
can to produce the number 2.

s (S501-1 to S501-4) is closed
be premium priced. If a pre-
st be available. If premium
CT lamps will flash and no
stance, RESET button must
ed.

it d

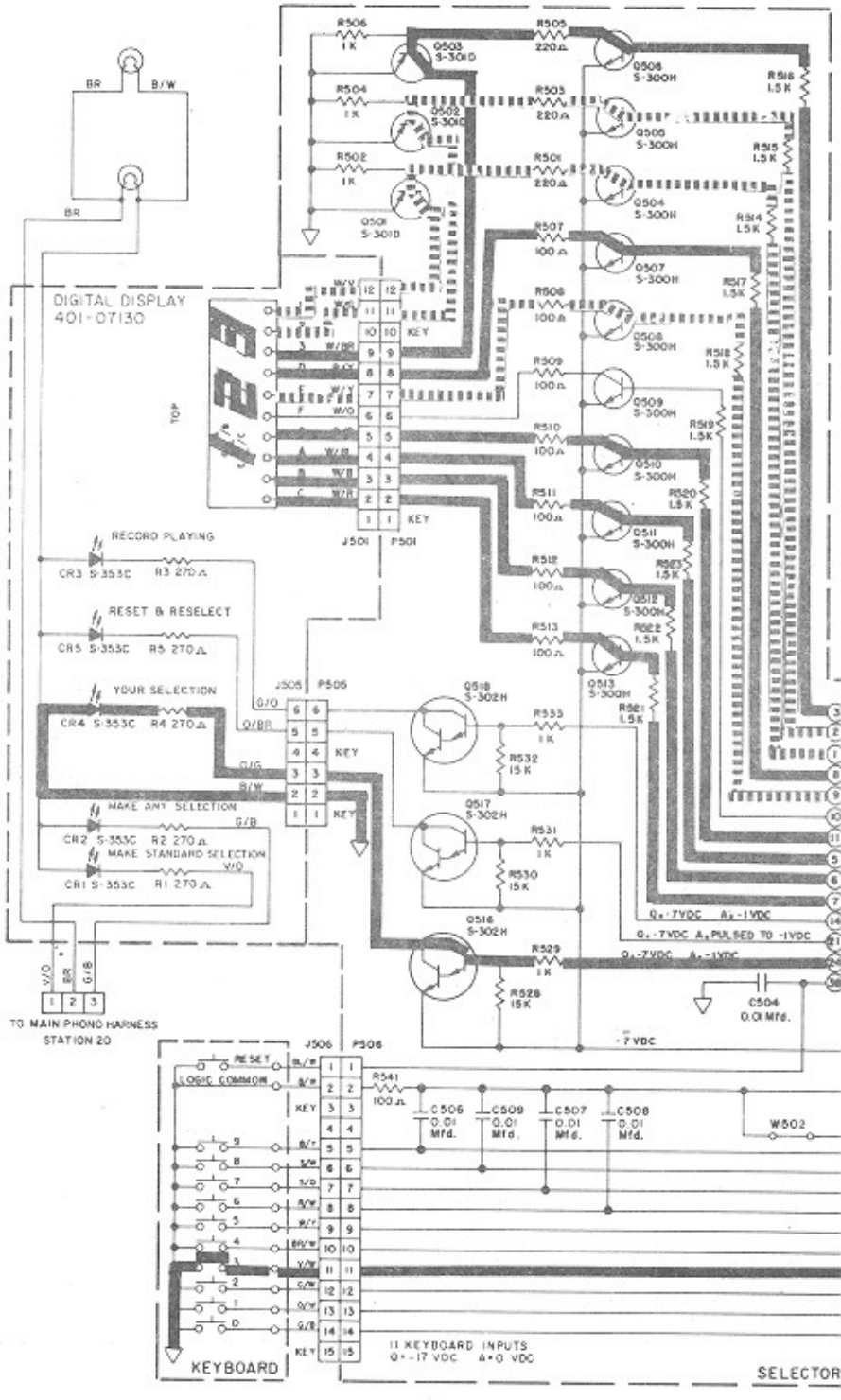

As was the case with selecting the second digit in the previous sequence, the third digit chosen can also be 0 through 9.

1. The number 3 is chosen for the third digit by pressing the corresponding push-button on the selector keyboard.

2. The signal (-7vdc to 0vdc) at selector chip pin 3 drives Q506 and Q503 which codes the signal for the third digit.

3. Signals (-7vdc to -1
Q512, Q510, Q51
ments of the third

4. After the third dig
is transmitted fron
ory unit where it is

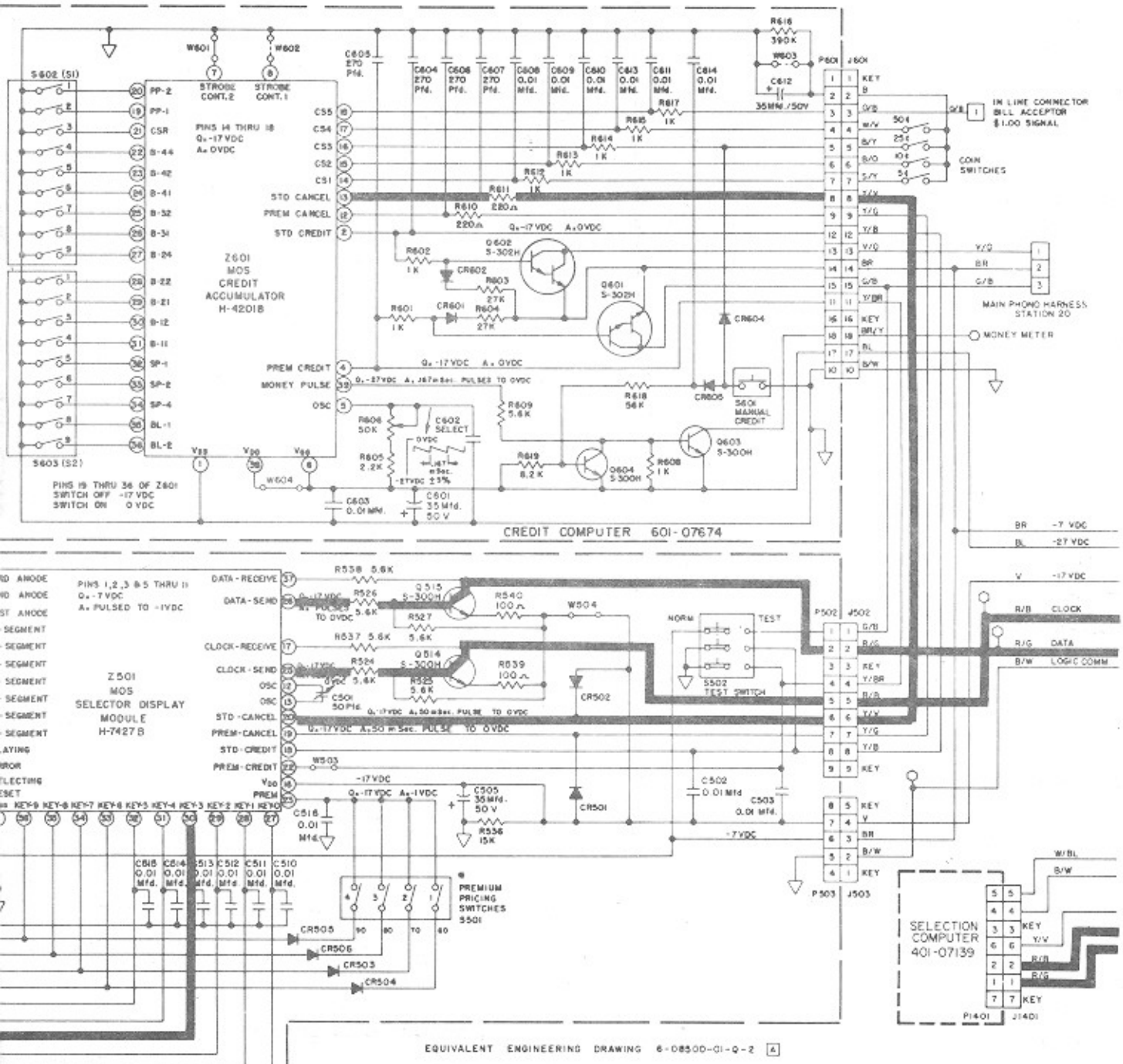

EQUIVALENT ENGINEERING DRAWING 6-08500-01-Q-2 [A]

6. THIRD DIGIT SELECTED AND DISPLAYED. CREDIT CANCELLED, SELECTION TRANSMITTED TO MEMORY UNIT.

dc) at pins 5, 6, 11, 7 and 8 of the selector chip drive Q511, and Q507 respectively, lighting the A, B, G, C and D segisplay unit during the scan to produce the number 3.

has been selected, the coded selection information (data) pin 26 of the selector chip (-17vdc to 0vdc) to the memtored.

5. Clock pulses (-17vdc to 0vdc) transmitted from pin 25 of the selector chip synchronize the selection data on pin 26.

6. The selection computer, connected across the clock and data lines, detects the data pulse train. It recognizes a selection sequence and enters the selection in its memory.

7. When the selection cycle is completed, a credit cancel signal (-17vdc to 0vdc) is sent to the credit computer from pin 20 of the selector chip and credit is erased.

(7) SELECTION DATA STORED IN MEMORY UNIT. SCAN SIGNAL ENERGIZES DETENT COIL AND MAGAZI

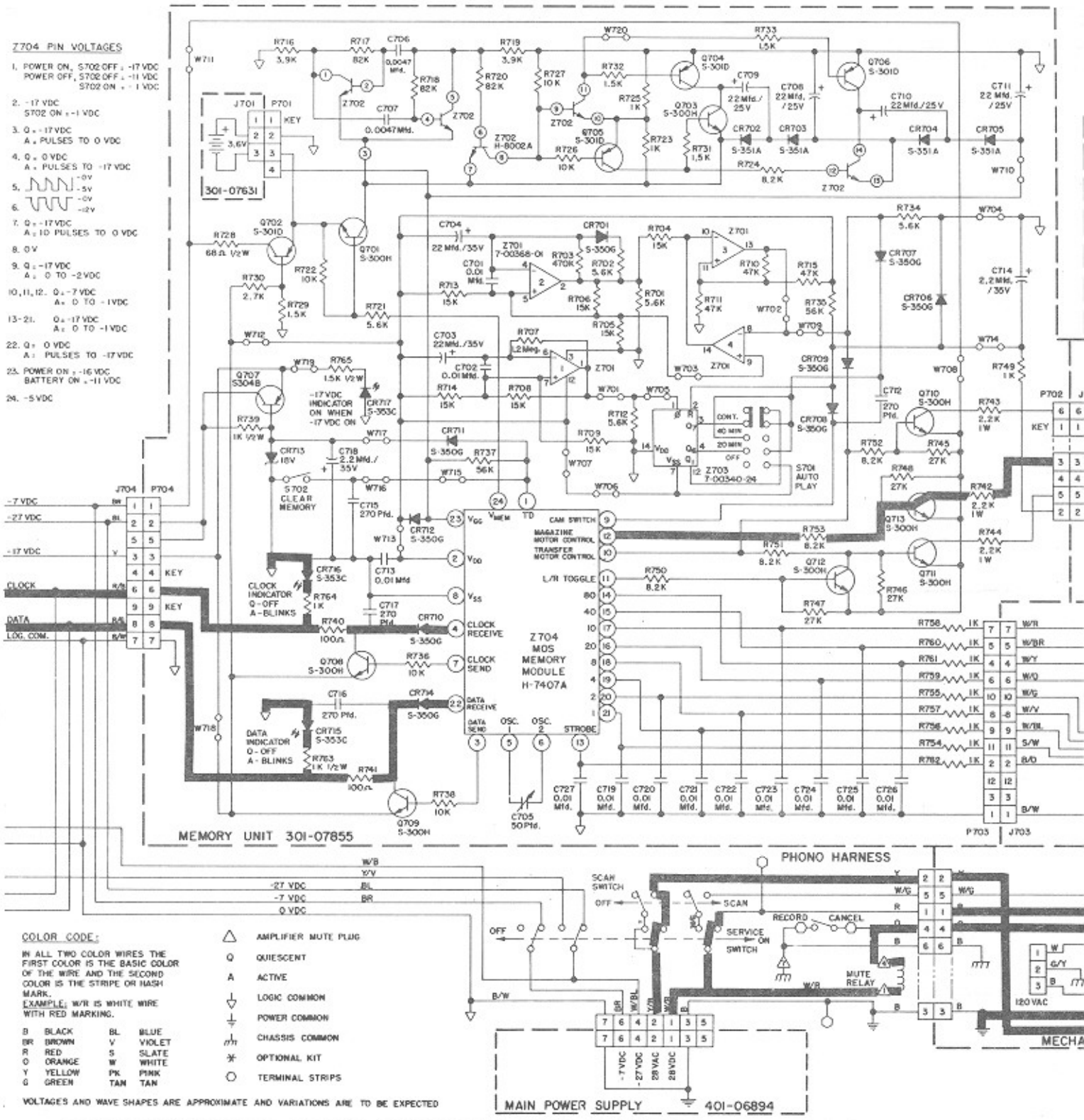

7. SELECTION DATA STORED IN MEMORY UNIT, SCAN SIGNAL ENERGIZES DETENT COIL AND AMPLIFIER MUTED.

1. The selection data and clock signals arrive at memory unit chip pins 4 and 22, lighting LED's CR716 (clock) and CR715 (data). These LED's will begin flashing when a selection is made and will continue to flash until the mechanism scans out.

2. The scan signal (-7 vdc to -1 vdc) on pin 12 of the memory chip drives Q713, Q808 and Q803 lighting SCAN LED CR814 and connecting 28 vdc to COMMON through the magazine detent coil.

3. The energized magazine detent coil operates a
fers the contacts of the magazine detent switc

4. Triac Q801 connects 28vac to COMMON throu
zine motor. The magazine motor is energized.

5. The amplifier mute relay is energized by 28
COMMON.

E MOTOR. AMPLIFIER MUTED.

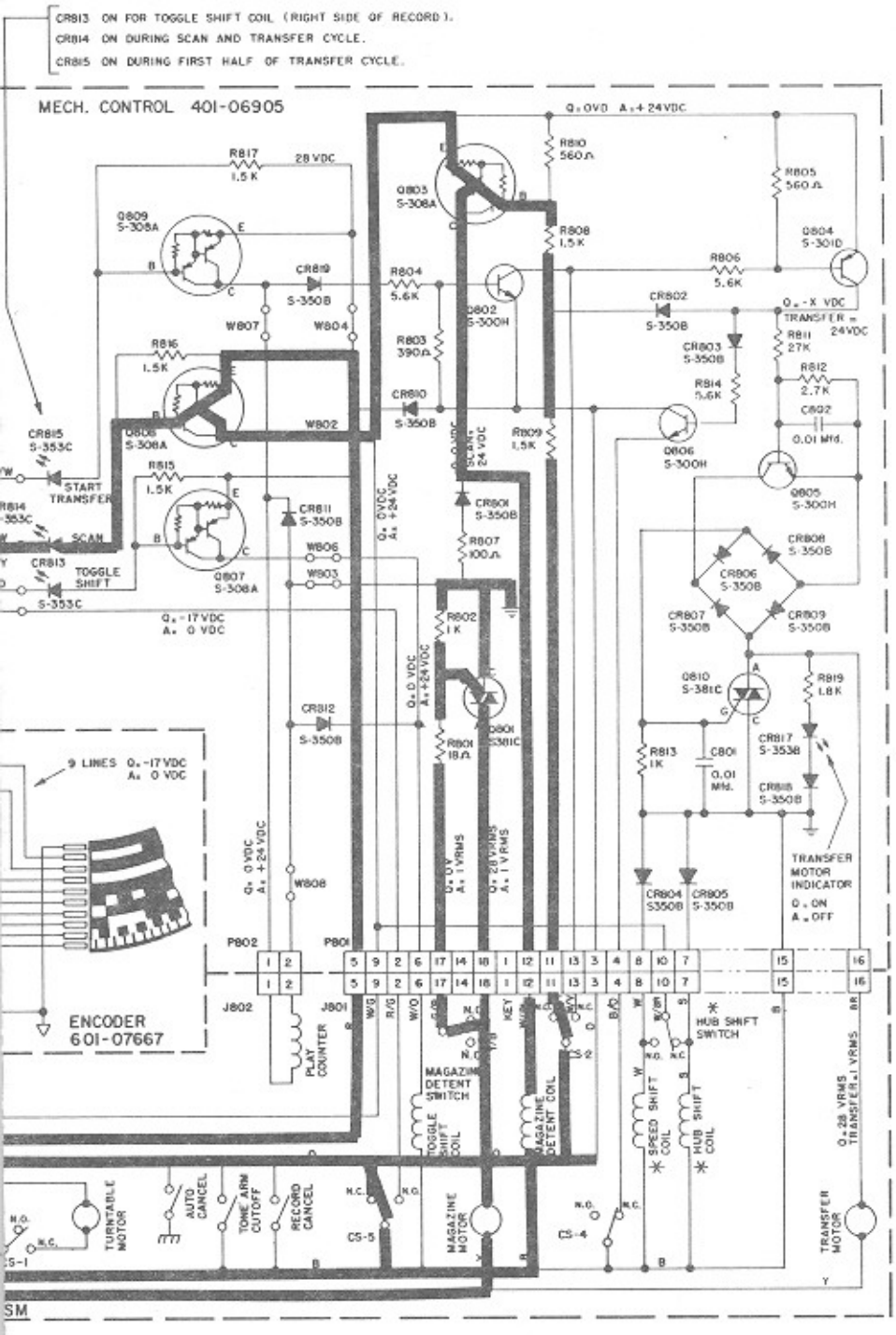

EQUIVALENT ENGINEERING DRAWING 6-08500-01-0-2 [A]

AGAZINE MOTOR.

echanical linkage which trans-
urning on triac Q801.

the service switch and maga-

c through cam switch CS5 to

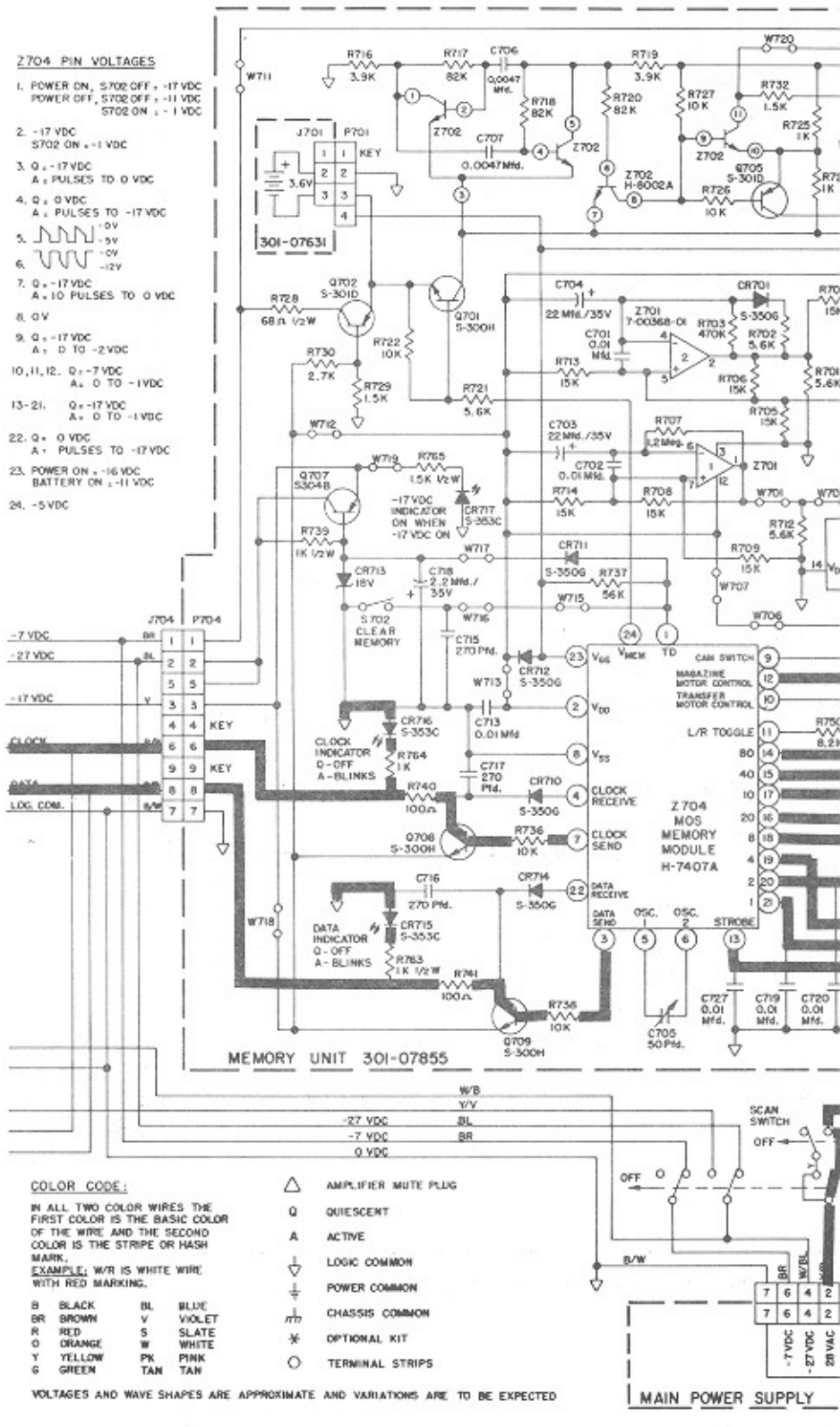

8. MAGAZINE RC

1. The magazine moto
the record changer
pattern on one side
record positions. Th
zine.

TATES. ENCODER SIGNAL SCANS MEMORY. ENCODER SIGNALS SENT TO SELECTOR. AMPLIFIER MUTED.

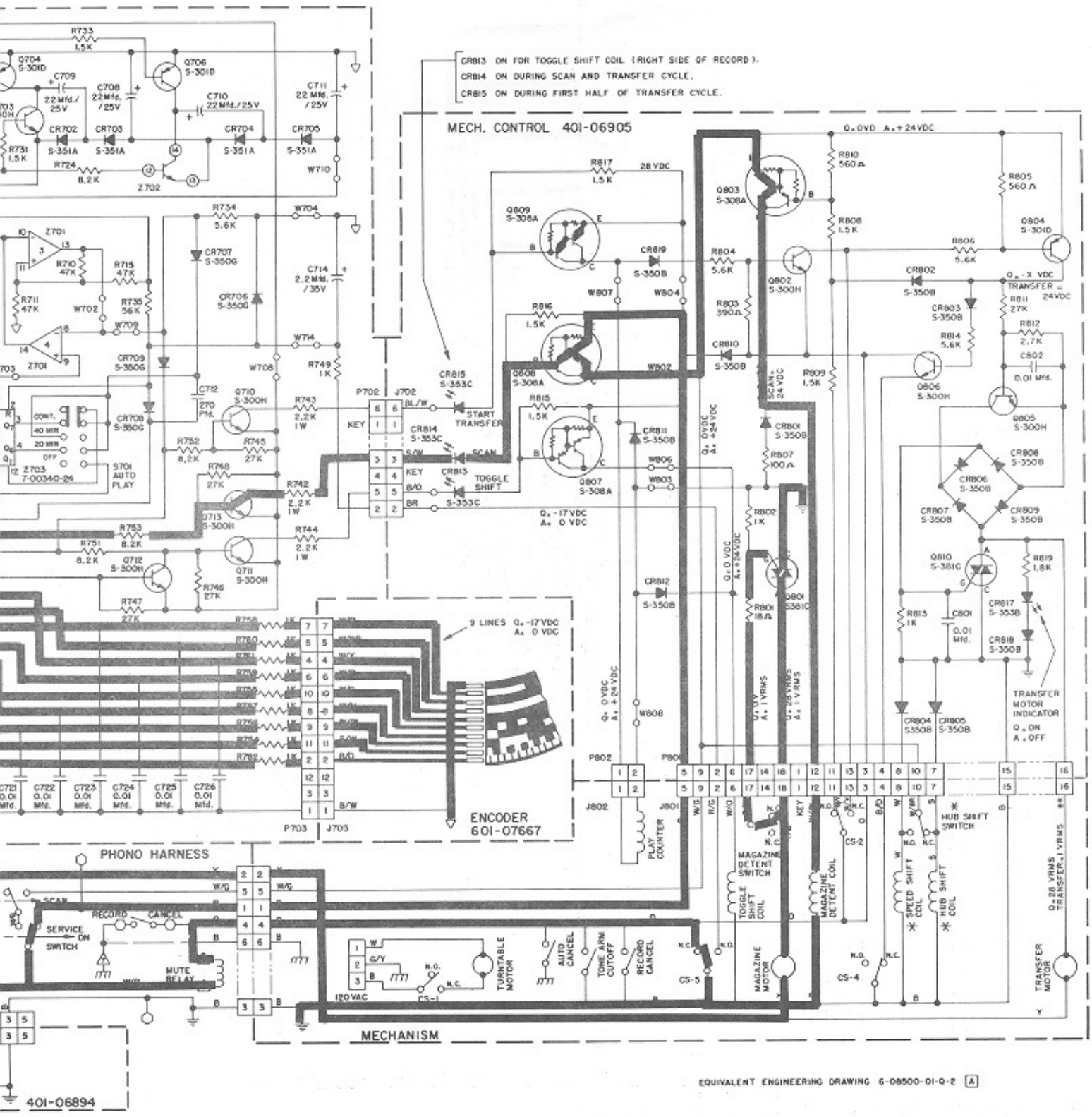

TATES. ENCODER SIGNALS SCAN MEMORY, ENCODER SIGNALS SENT TO SELECTOR. AMPLIFIER MUTED.

drives an encoder commutator disc on the right side of echanism. The disc has a binary coded printed circuit The circuit segments correspond directly to the 100 disc is mechanically synchronized with the record maga-

2. Stationary wipers in the encoder assembly contact the circuits on the encoder disc.

3. Encoder signals are transmitted from the memory chip to the selector logic module on the data and clock lines.

(9) RECORD PLAYING (OR SCAN) DISPLAYED.

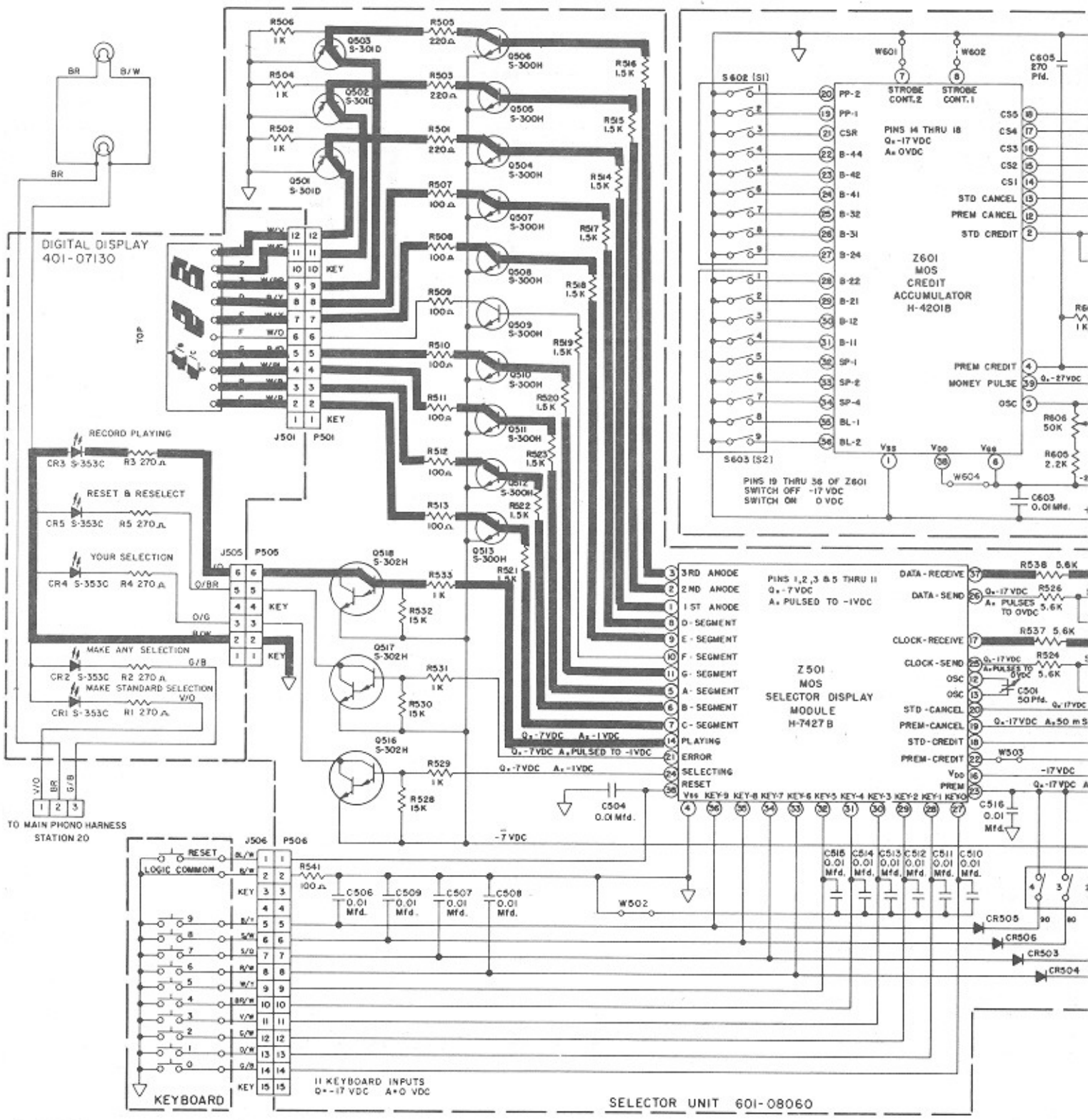

9. RECORD PLAYING (OR SCAN) DISPLAYED.

1. A signal (-7 vdc to -1 vdc) at pin 14 of the selector chip drives Q518 which lights the RECORD PLAYING LED. The YOUR SELECTION LED goes out.

2. If the phonograph is playing a selection, the selection number will be shown on the display. If the mechanism is scanning when the RECORD PLAYING lamp comes on, the scan will be displayed.

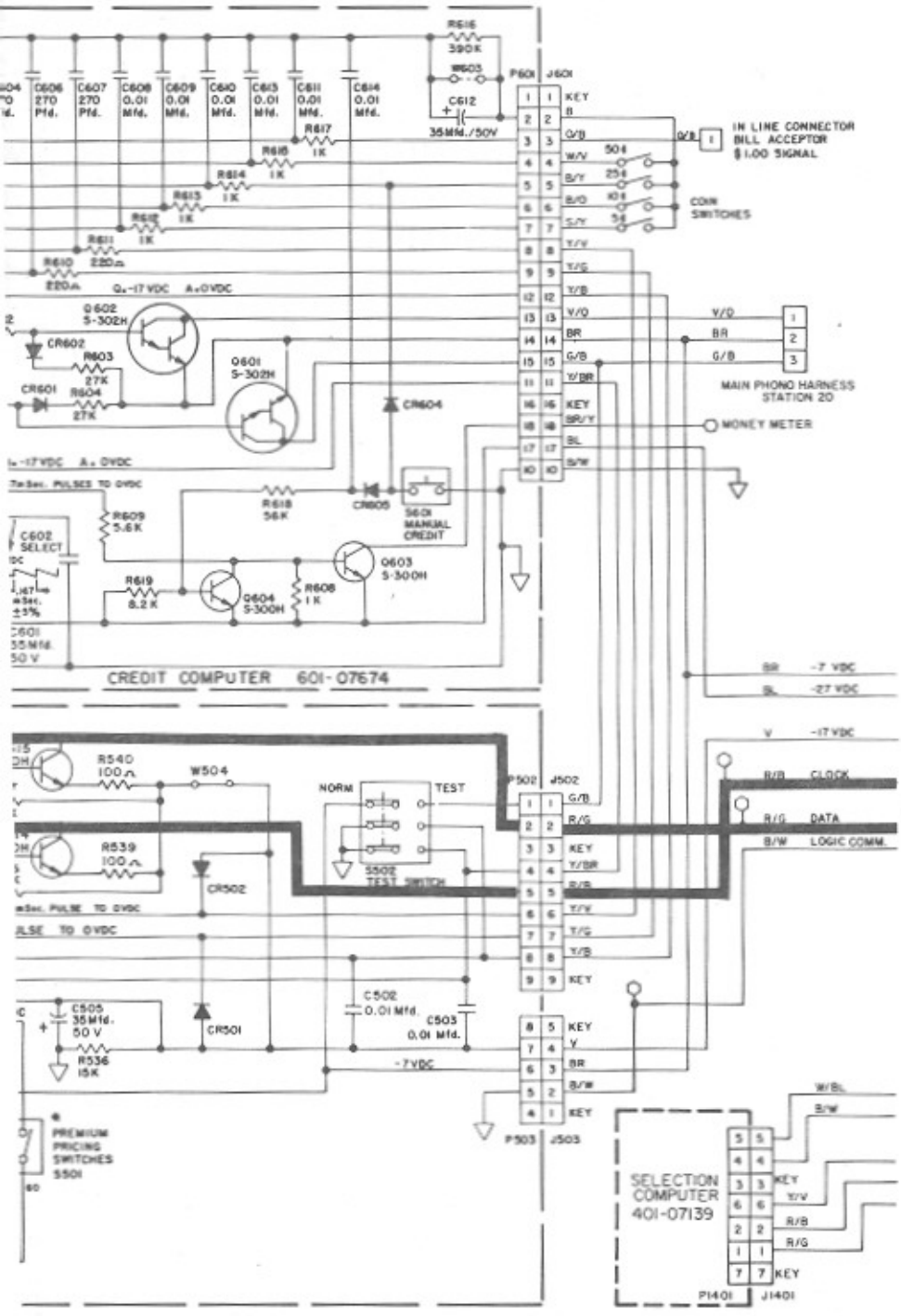

EQUIVALENT ENGINEERING DRAWING 6-08500-01-Q-2 [A]

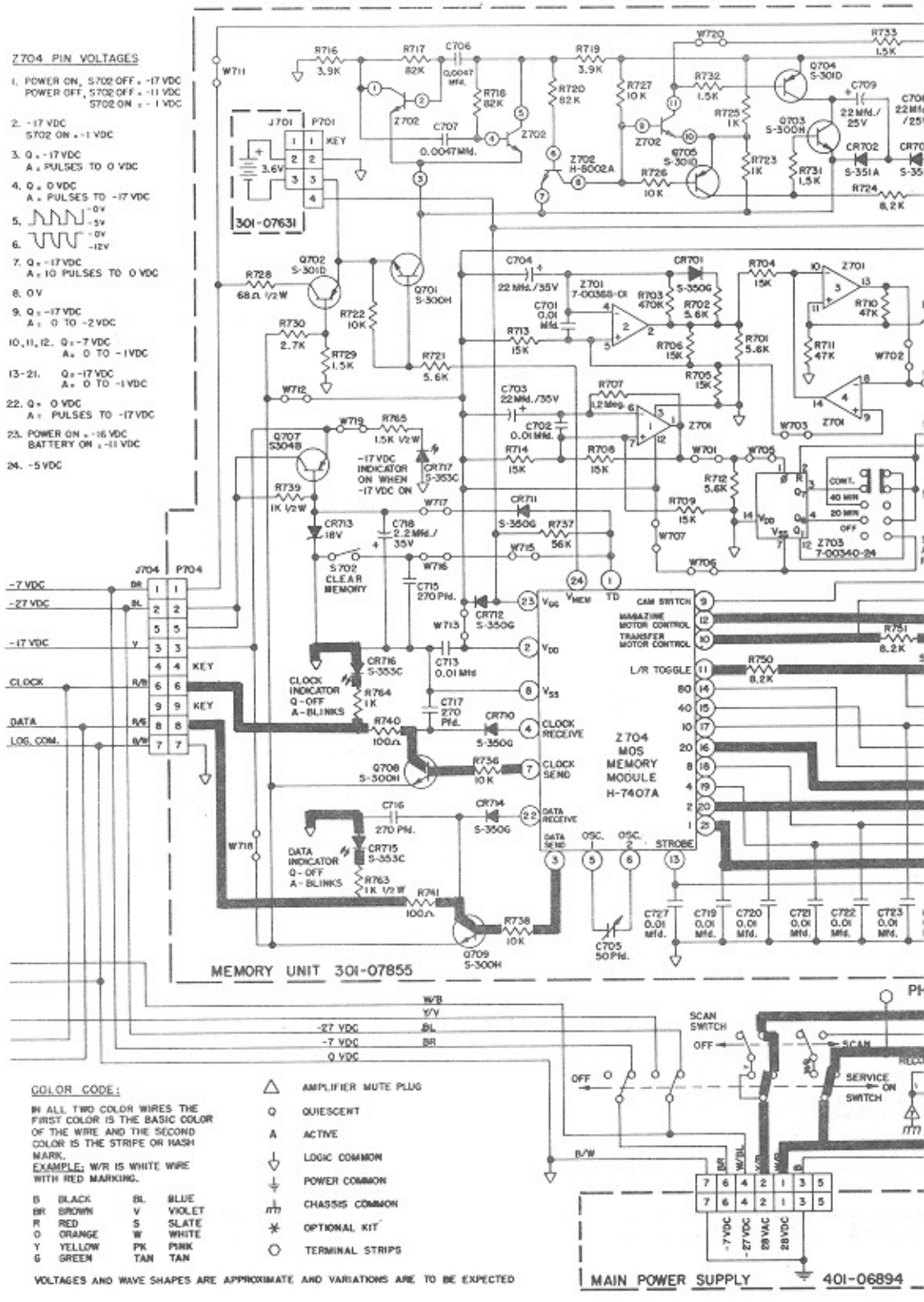

10. SELECTION LOCATED.

1. When the selection is located in the memory chip, the voltage at pin 10 changes from -7 vdc to 0 vdc. This transfer signal turns on Q710 which drives Q809, Q802 and Q804, lighting START TRANSFER LED CR815.

2. Q804 turns on Q805 and drives an AC switch consisting of CR806 through CR809. The switch drives triac Q810 which completes a circuit to energize the transfer motor. TRANSFER MOTOR LED CR817 goes out.

3. Q804
deten
remov

4. The t
shift
begin
gins v
drive
shift

(10) SELECTION LOCATED.

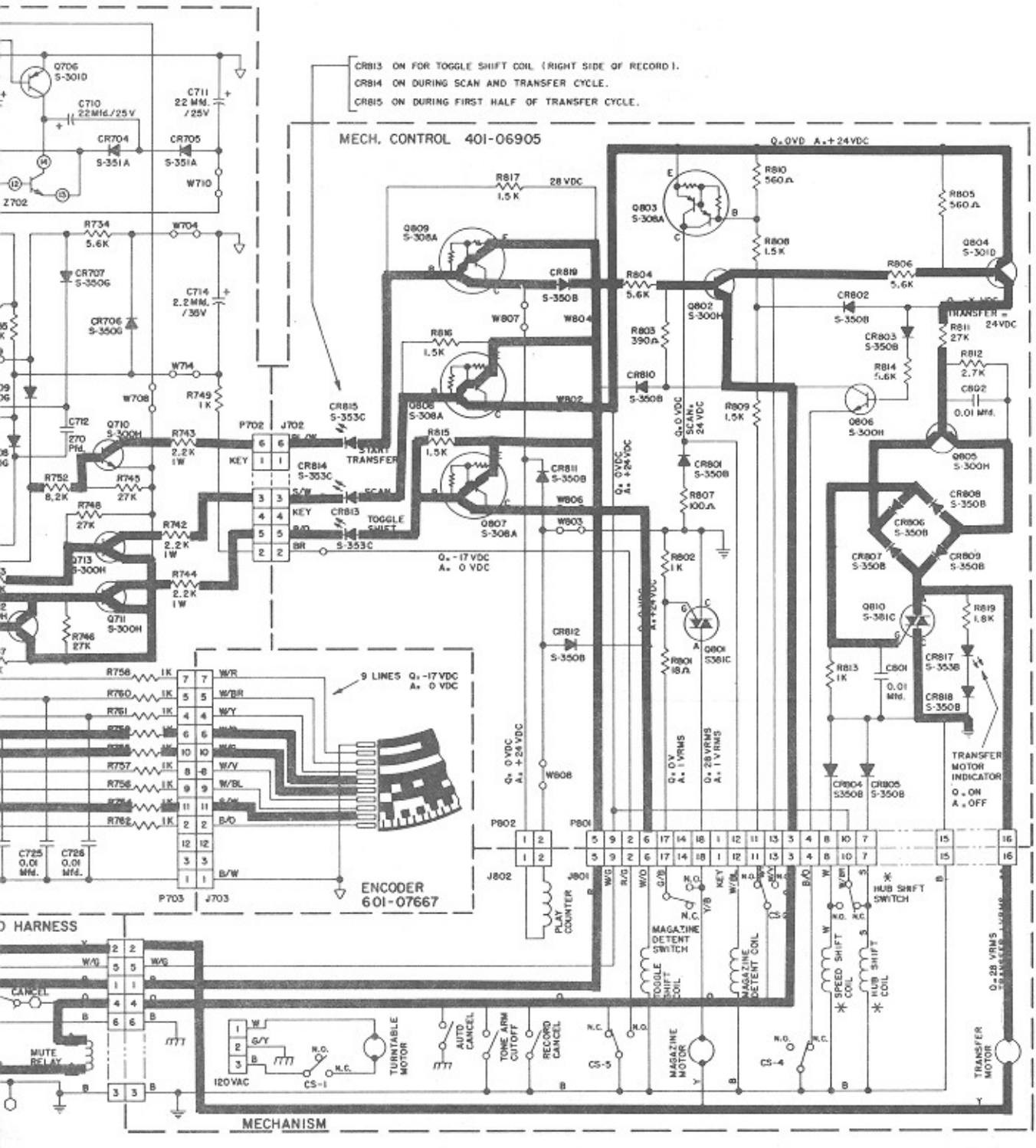

EQUIVALENT ENGINEERING DRAWING 6-08500-01-0-2 [A]

nultaneously turns off Q803. This opens the circuit to the magazine oil. The magazine detent coil transfers the magazine detent switch power from the magazine motor.

sfer signal at pin 10 also drives Q711 and Q807. This lights toggle D CR813 and energizes the toggle shift coil if the selection number ith the number 2 (right side selection). If the selection number be- the number 1 (left side), a signal on pin 11 of the memory chip will 12 which will short the drive to Q711 to -7 vdc to disable the toggle uit.

5. The play counter is energized by Q809.

6. The selection is erased in the memory chip.

(11) TRANSFER BEGINS.

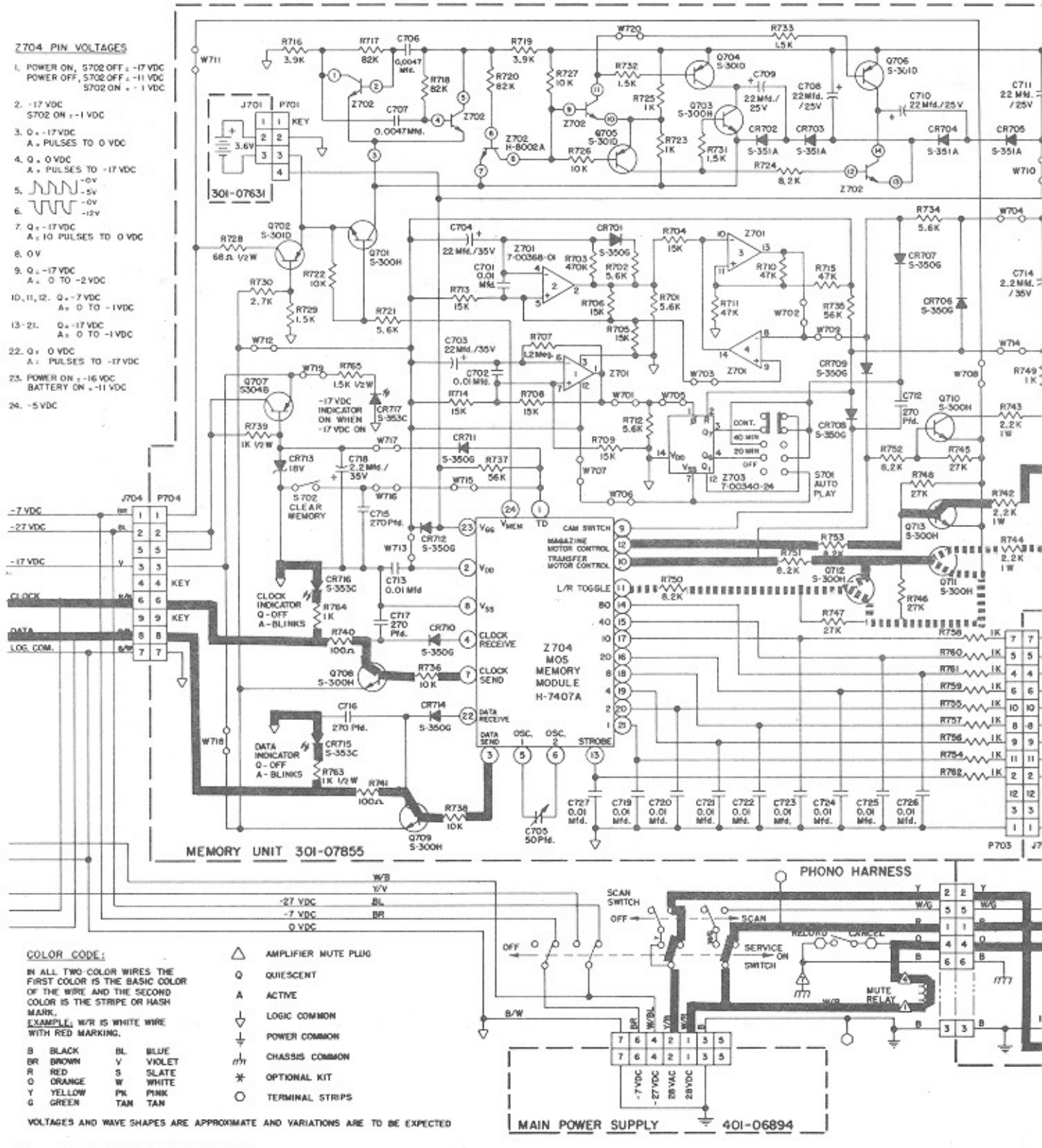

11 TRANSFER BEGINS

1. A cam operated by the transfer motor operates cam switches CS1, CS2, CS4 and CS5.

2. As the transfer motor and cam rotate, cam switch CS1 transfers, applying power to the turntable motor.

3. Cam switch CS2 transfers locking the transfe

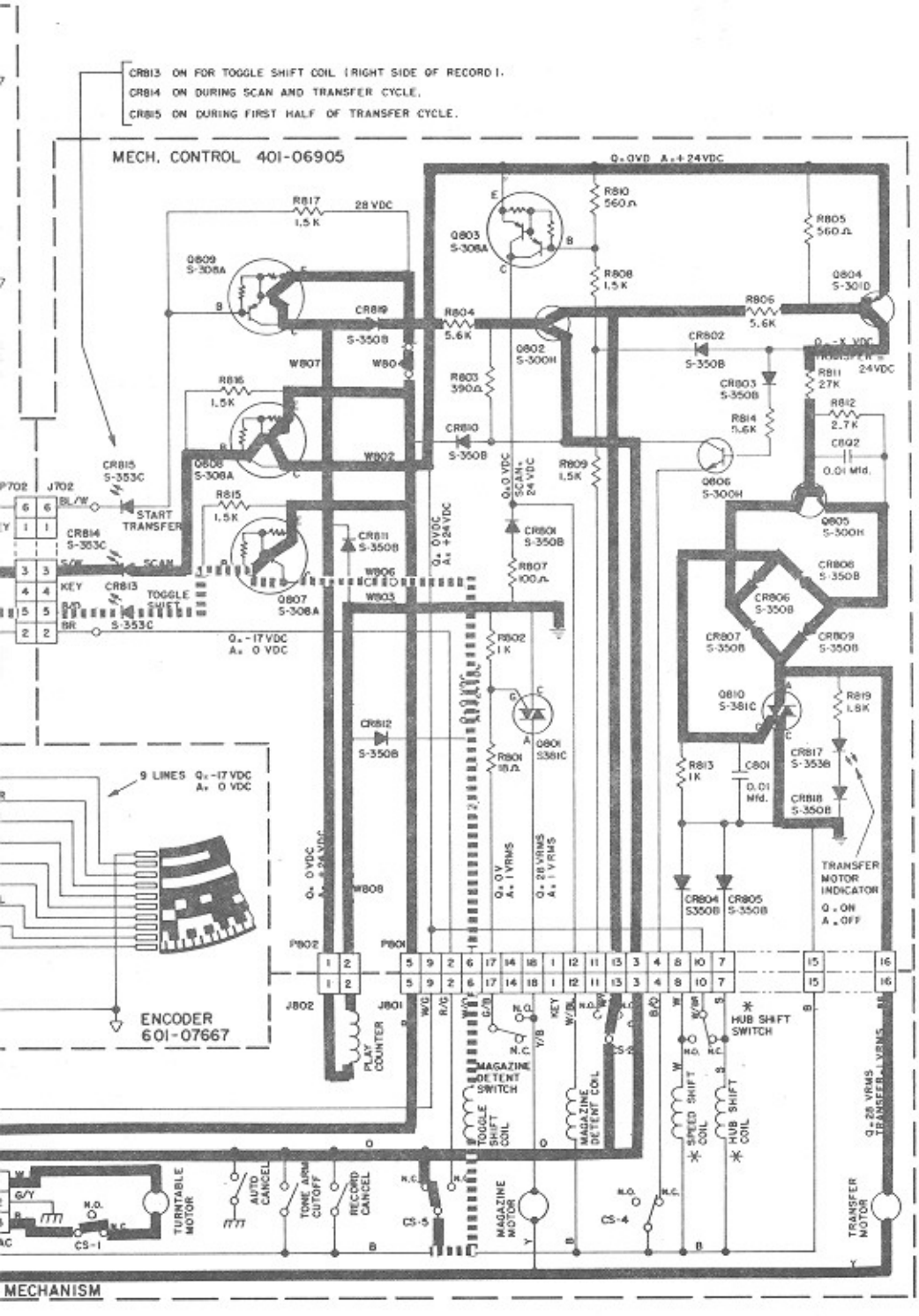

EQUIVALENT ENGINEERING DRAWING 6-08500-01-Q-2 [A]

ircuit on.

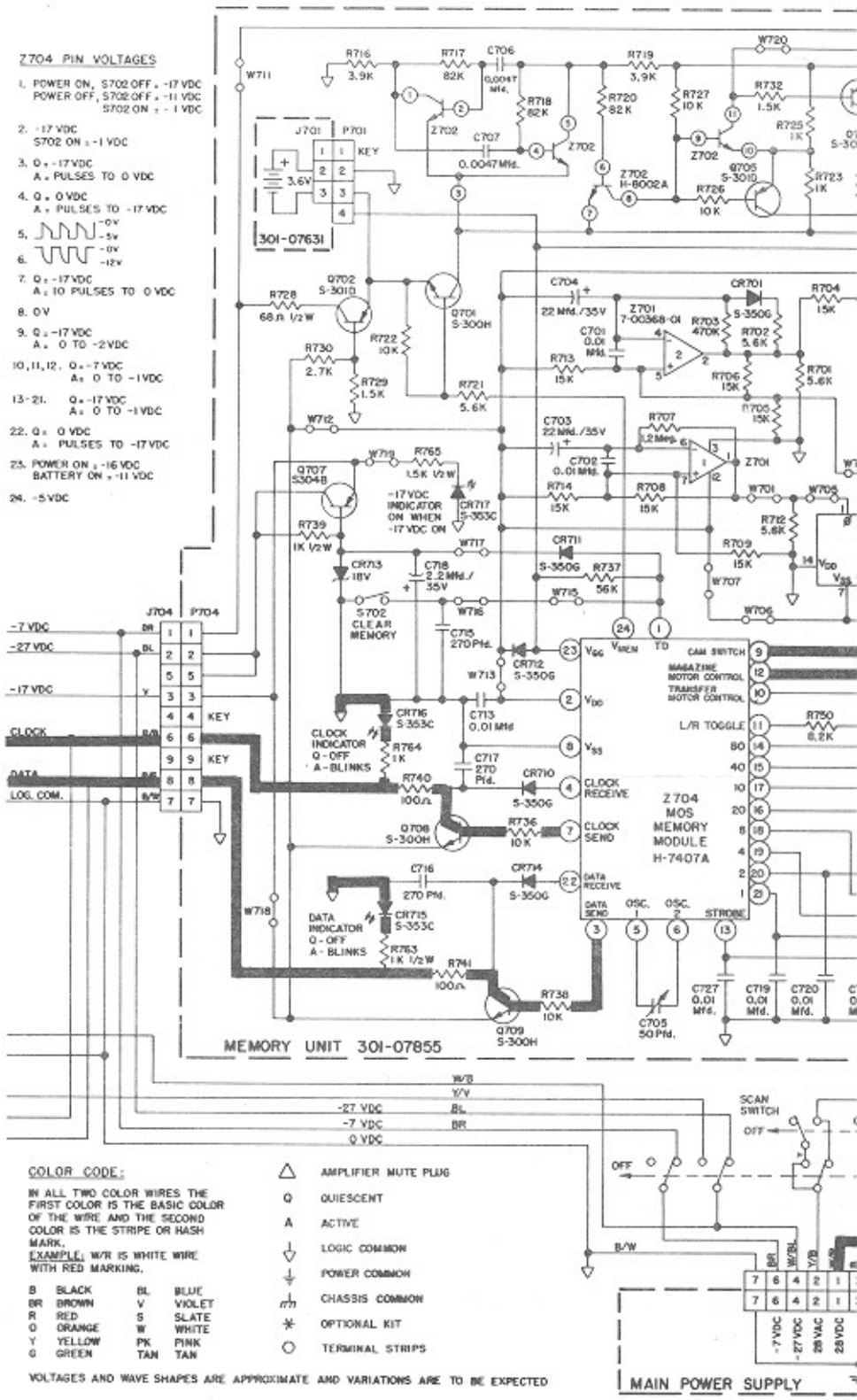

12. RECORD PLAC

1. CS4 transfers, breakin

2. CS5 transfers, opening
dition CS5 connects pi
transfer signal on pin

(12) RECORD PLACED ON TURNTABLE. TONE ARM SET DOWN.

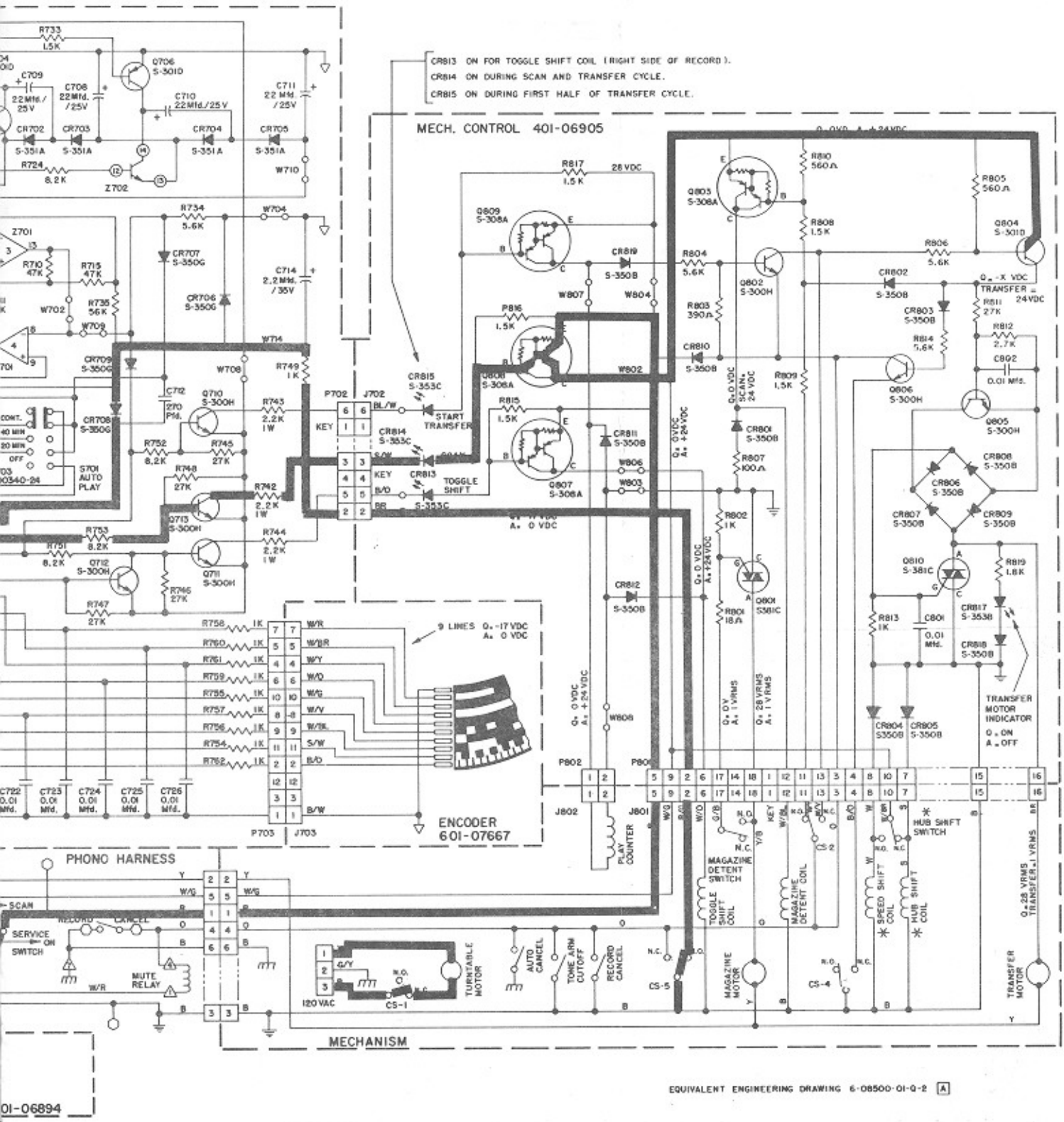

ON TURNTABLE. TONE ARM SET DOWN.

e holding circuit to Q806.

circuit to the transfer motor and mute relay. In ad-
of the memory chip to COMMON which cancels the

3. TRANSFER MOTOR LED CR817 lights and START TRANSFER LED CR815 goes out.

4. The record plays.

(13) RECORD ENDS.

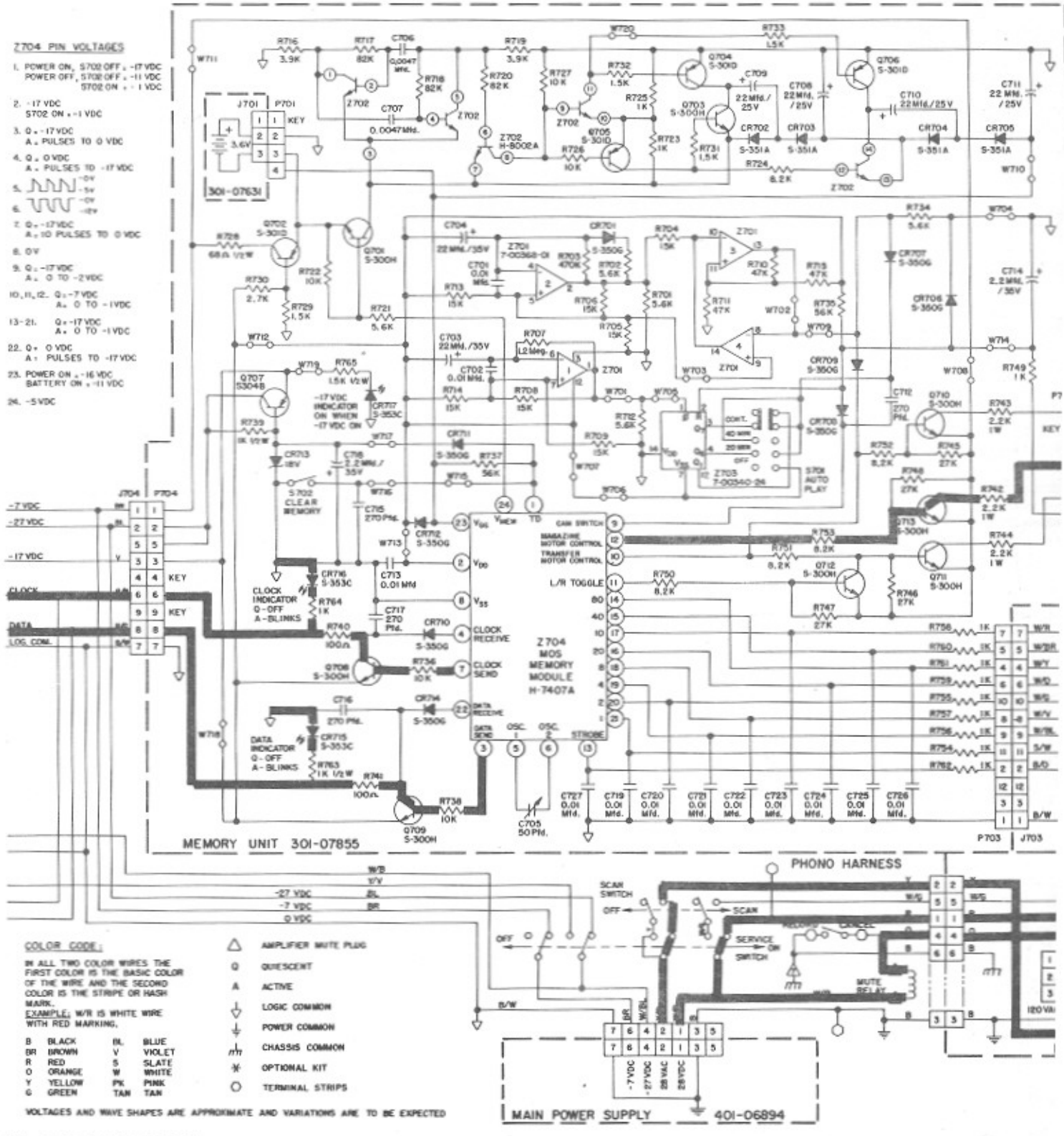

13. RECORD ENDS

1. As the tone arm tracks into the cutoff groove of the record, a magnet on the underside of the tone arm operates the tone arm cutoff reed switch. The mute relay is energized.

2. The tone arm cutoff switch also provides a circuit to COMMON through cam switch CS2 to switch on Q804. Q804 drives the transfer motor circuit.

3. The record gripper arm picks up the record : CS4 transfers back and locks the transfer circ

4. Cam Switch CS5 transfers back, insuring cont

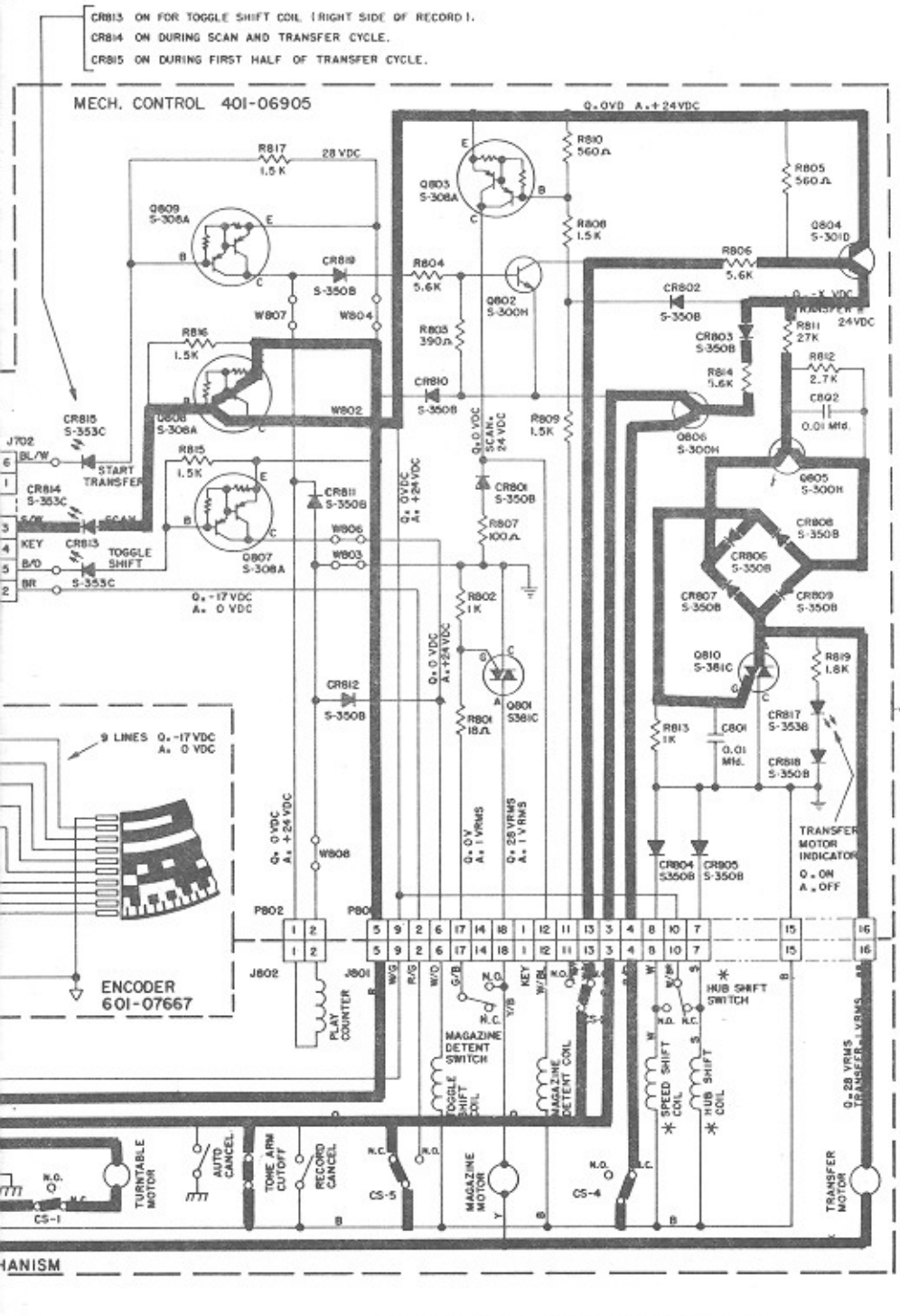

EQUIVALENT ENGINEERING DRAWING 6-08500-01-0-2 [A]

n the turntable. Cam switch
n through Q806.

tion of transfer function.

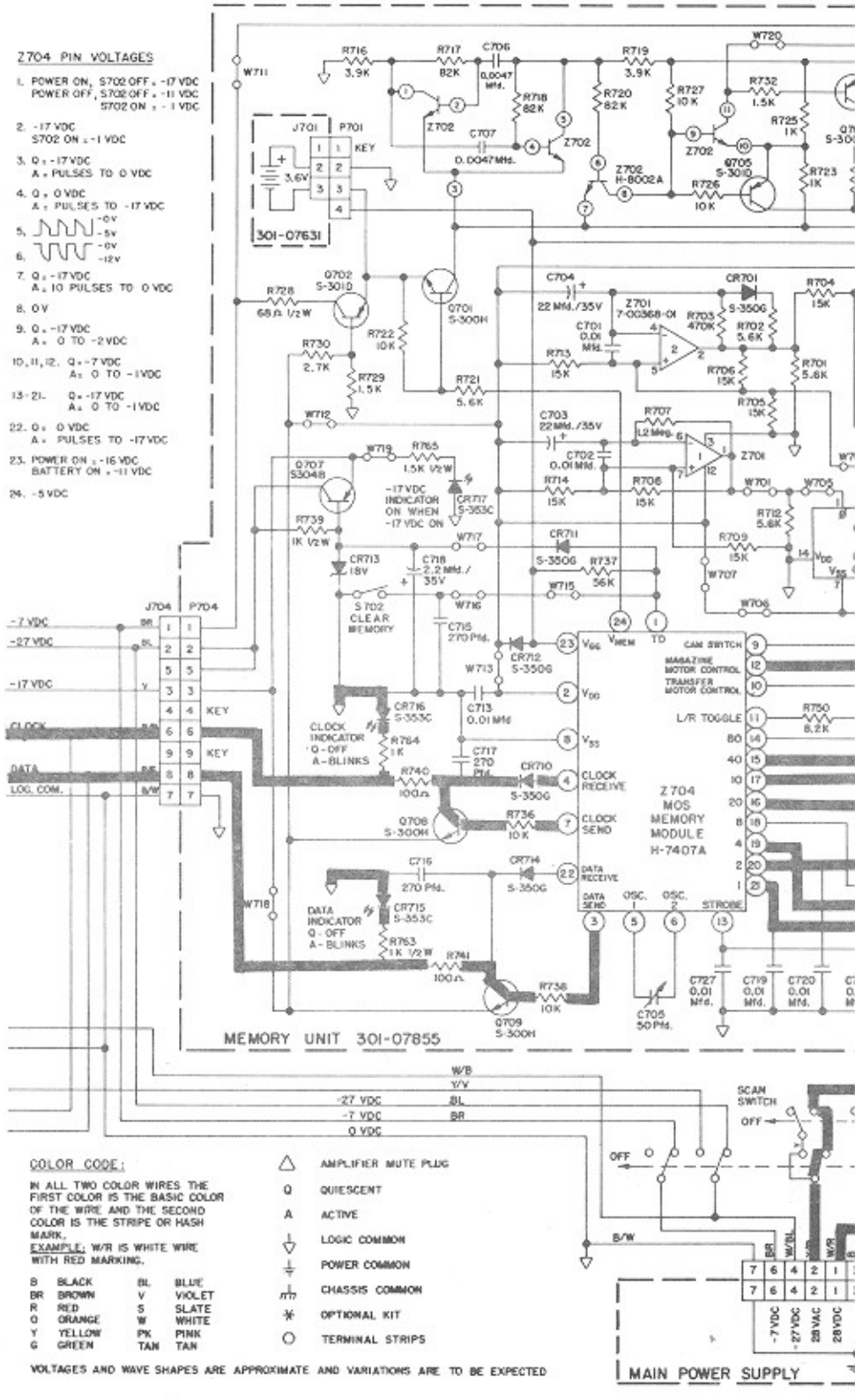
Z704 PIN VOLTAGES
1. POWER ON, S702 OFF = -17 VDC
POWER OFF, S702 OFF = -11 VDC
S702 ON = -1 VDC
2. -17 VDC
S702 ON = -1 VDC
3. Q = -17 VDC
A = PULSES TO 0 VDC
4. Q = 0 VDC
A = PULSES TO -17 VDC
5. -0V -5V
6. -0V -12V
7. Q = -17 VDC
A = 10 PULSES TO 0 VDC
8. 0 V
9. Q = -17 VDC
A = 0 TO -2 VDC
10, 11, 12. Q = -7 VDC
A = 0 TO -1 VDC
13 - 21. Q = -17 VDC
A = 0 TO -1 VDC
22. Q = 0 VDC
A = PULSES TO -17 VDC
23. POWER ON = -16 VDC
BATTERY ON = -11 VDC
24. -5 VDC
MEMORY UNIT 301-07855
Z704 MOS MEMORY MODULE H-7407A
MAIN POWER SUPPLY
SCAN SWITCH
COLOR CODE:
IN ALL TWO COLOR WIRES THE FIRST COLOR IS THE BASIC COLOR OF THE WIRE AND THE SECOND COLOR IS THE STRIPE OR HASH MARK.
EXAMPLE: W/R IS WHITE WIRE WITH RED MARKING.
B BLACK
BR BROWN
R RED
O ORANGE
Y YELLOW
G GREEN
BL BLUE
V VIOLET
S SLATE
W WHITE
PK PINK
TAN TAN
AMPLIFIER MUTE PLUG
Q QUIESCENT
A ACTIVE
LOGIC COMMON
POWER COMMON
CHASSIS COMMON
OPTIONAL KIT
TERMINAL STRIPS
VOLTAGES AND WAVE SHAPES ARE APPROXIMATE AND VARIATIONS ARE TO BE EXPECTED

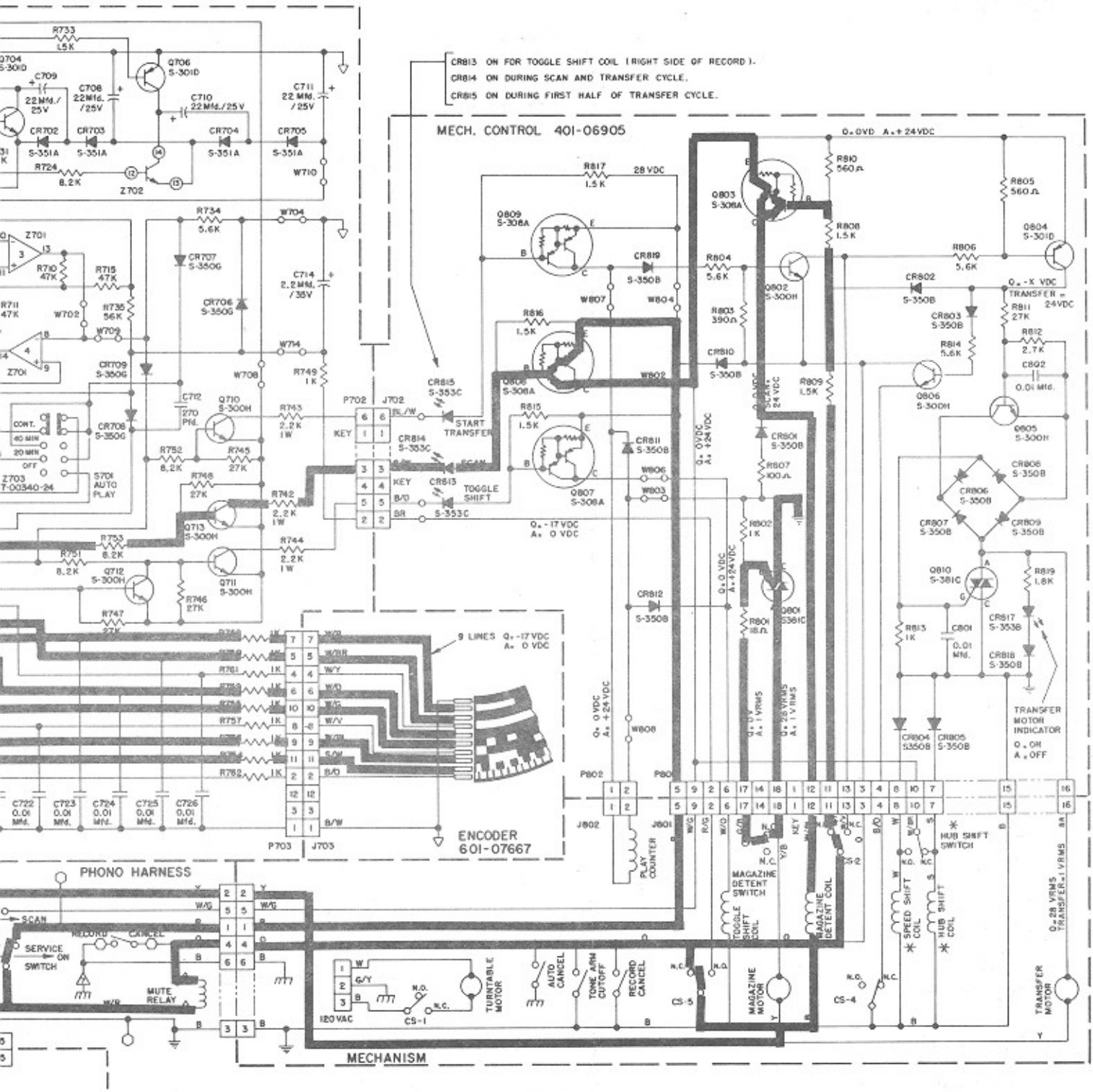

14. RECORD RETURNED TO MAGAZINE. MECHANISM SCANS OUT.

1. Cam switch CS2 transfers, opening the transfer circuit and energizing the scan circuit.

2. The magazine rotates one to one-and-a-half turns and the memory is searched for additional selections.

3. If there are no selections stored in the memory chip, the voltage on pin 12 of the memory chip drops to -7vdc from 0vdc and the scan, data and clock circuits are deenergized.

(15) AUTO PLAY.

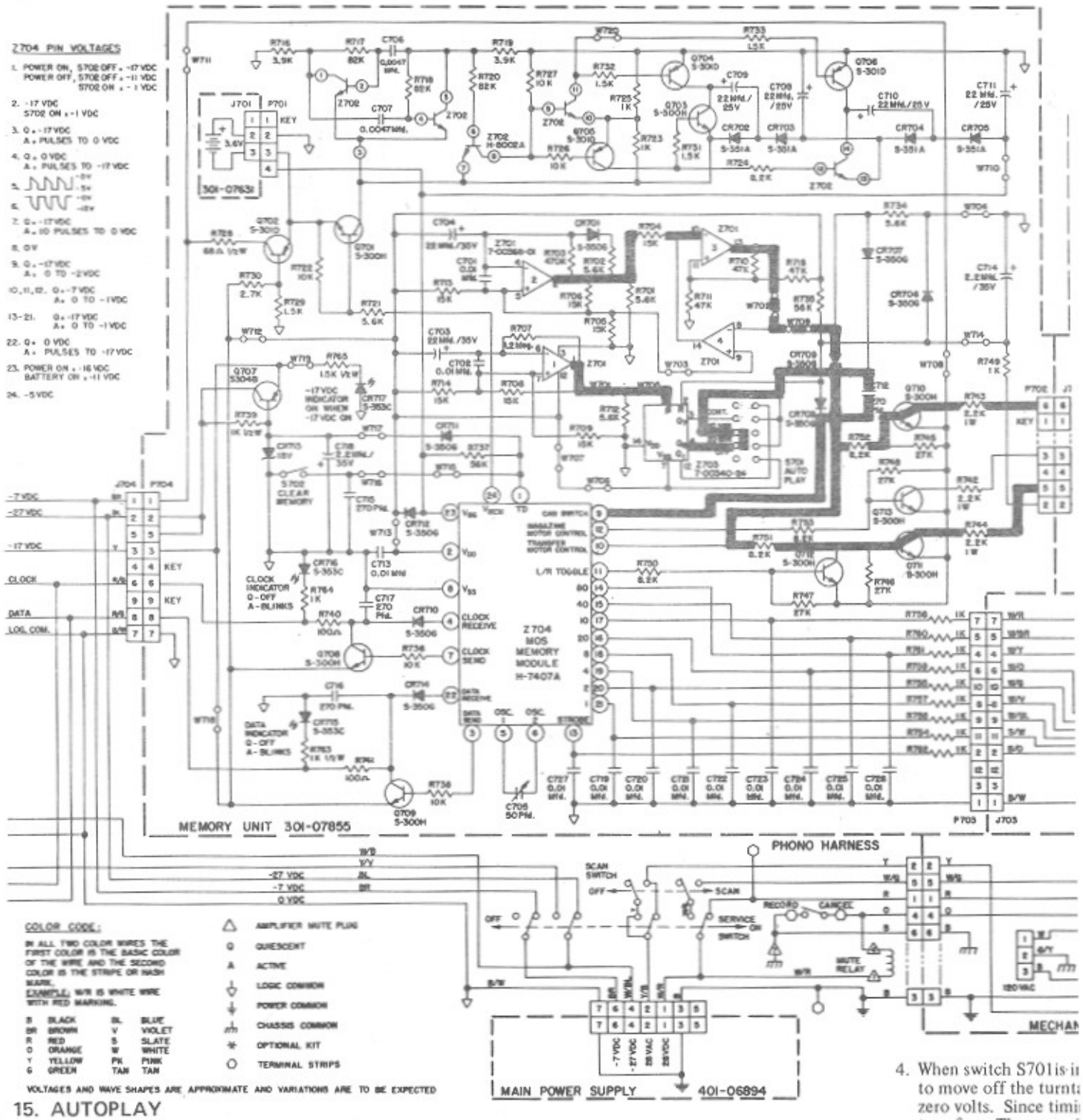

15. AUTOPLAY

1. Z701-1 and its associated resistors and capacitors form an oscillator which has a period of about 40 seconds (oscillator 1). Z701-2 similarly is an oscillator with a period of about 8 seconds (oscillator 2). The two oscillators are not related to each other in either phase or frequency.

2. Oscillator 1 drives the clock input of seven stage counter Z703. The reset, R, holds the counter at zero. When the reset is released, each oscillator cycle increases the count by 1. Oscillator 2 drives the set input of a flip-flop formed by Z701-3, -4. The reset or the output of Z703 selected by switch S701 holds the flip flop off.

3. When switch S701 is in the OFF position, both oscillators will run, but the switch has the output line of the autoplay circuit tied to -17 volts. This prevents the autoplay circuit from affecting phono operation.

4. When switch S701 is in
to move off the turnt
zero volts. Since timi
transfers. The magazi
This re-initiates scan s

5. After the Z703 outpu
flop. The output of t
on the time between t
lator 2 (about 8 secon

6. With switch S701 in t
causes CS5 to transfer

7. Selections made by cu
autoplay is in CONT

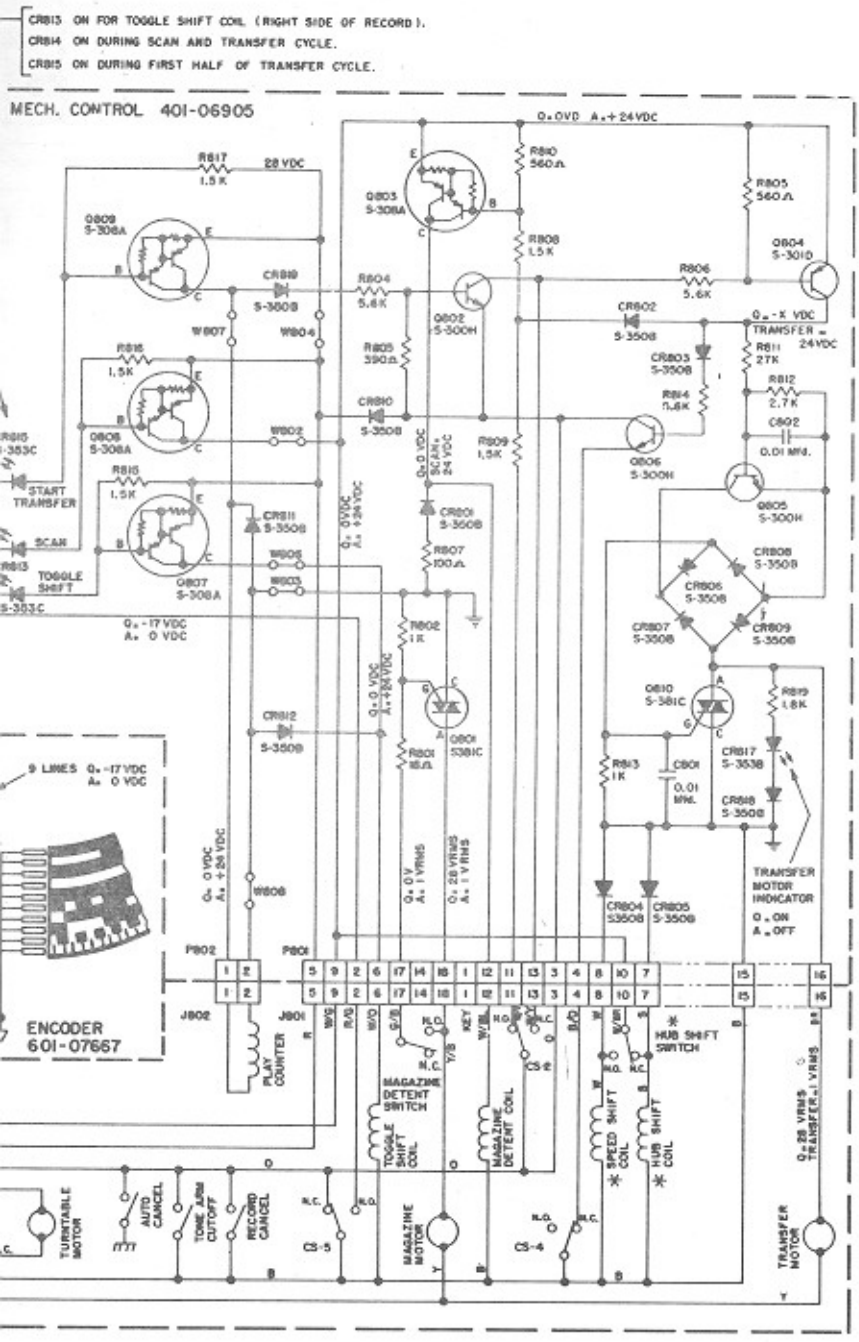

CONT position, the reset is released from the autoplay circuit when CS5 transfers as the record begins At the next negative transition of oscillator signal, Pin 12 (Q1) of Z703 will switch from -17 volts to the oscillator is random, this signal may occur at any time from zero to about 40 seconds after CS5 ay, or may not, scan out before the signal occurs. The signal pulses Pin 9 of Z704 through capacitor C712. t it will continue as long as needed for autoplay.

occured as described, the next negative pulse from oscillator 2 signal at Pin 2 of Z701 will set the flip p flop drives both the transfer and toggle circuits through diode CR709. The record selected depends art of the scan and the start of the transfer. This time will vary from zero to the full period of oscil- If switch S701 is in the 20 position, counter Z703 must count 32 cycles of oscillator 1 before scan is begun.

position, 64 cycles are required before the scan is started. In any case, if a record is played, which entire circuit is reset and the time required to start autoplay selection must begin from zero.

ers from the selector keyboard will play normally without interference from autoplay. However, if , an autoplay selection may be played before the chosen selection.

REF. DESIGNATION	DESCRIPTION	ROWE PART NO.
	MODEL R-82 PHONOGRAPH 601-08500 (Page 1 of 2)	
	Selector Keyboard, Digital Display, Selection Lamps (See Parts Catalog for Parts List)	
	Coin Switches (See Parts Catalog)	
	Credit Computer Assembly 601-07674	
	Credit Computer Cover with Lettering	301-07637
	Credit Computer Base	301-07624
	Insulation Pad	201-17710
	Insulated Base	201-17711
	Credit Computer Circuit Board Assembly	601-07670
	Consisting of:	
C601	35 MFD Electrolytic Capacitor, 50V (Motorola TT; Sprague 30D; G.E. 78F, 76F)	708-00235
C602	0.047 MFD Mylar Capacitor, 100V (Paktron FM720; Amperex C280; Electromotive P94731-1)	708-00240
or	0.1 MFD Mylar Capacitor, 100V (Paktron FM720; Sprague 225P; Electromotive P91041-1)	702-00240
or	0.068 MFD Mylar Capacitor, 100V (Paktron FM720; Sprague 225P; Electromotive P96831-1)	714-00240
or	0.022 MFD Mylar Capacitor, 100V	704-00240
or	0.033 MFD Mylar Capacitor, 100V	710-00240
or	0.01 MFD Mylar Capacitor	707-00240
	One of the above selected to meet oscillator frequency operation	
C603	0.01 MFD Ceramic Disc Capacitor, 100V	721-00224
C612	35 MFD Electrolytic Capacitor, 50V (Same as C601)	708-00235
C613,C614	001 MFD Ceramic Disc Capacitor, 100V	721-00224
CR601,CR602	Silicon Diode	707-00350
CR604,CR605	Silicon Diode (Same as CR601)	707-00350
Q601, Q602	Darlington Amp Transistor (Motorola 2N654B; Nat'l. Semi-Cond. NSD-U45)	708-00302
Q603, Q604	NPN Silicon Transistor (Motorola, Fairchild, National Semiconductors MPS-A06)	708-00300
R601, R602	1/4 W Carbon Resistor, 1K	7-9901-102
R603,R604	1/4 W Carbon Resistor, 27K	7-9901-273
R605	1/4 W Carbon Resistor, 2.2K	7-9901-222
R606	1/2 W Trimmer Potentiometer, 50K (Bourns 3389; CTS-362Y; Weston 840P)	202-15207
R608	1/4 W Carbon Resistor , 1K	7-9901-102
R609	1/4 W Carbon Resistor, 5.6K	7-9901-562
R610, R611	1/4 W Carbon Resistor, 220 Ohms	7-9901-221
R612 to R615	1/4 W Carbon Resistor, 1K	7-9901-102
R616	1/4 W Carbon Resistor, 390K	7-9901-394
R617	1/4 W Carbon Resistor, 1K	7-9901-102
R618	1/4 W Carbon Resistor, 56K	7-9901-563
R619	1/4 W Carbon Resistor, 8.2K	7-9901-822
S601	SPST Pushbutton Switch (Oak Industries Series 415)	201-17733
S602, S603	9 Init DIP Switch (Amp 435166-6; Molex 01-07-0109; CTS 206-9)	701-00430
W601, W604	Wire Jumper	Spec 5039
Z601	MOS Credit Accumulator	302-04201
P601-18	2 Circuit Polarizing Wafer Assembly	702-00750
P601-1	14 Circuit Polarizing Wafer Assembly	714-00750
	Credit Computer Printed Wiring Board	601-07671
	DIGITAL DISPLAY AND HARNESS ASSEMBLY 401-07130	
CR1 to CR5	Light Emitting Diode (Nat'l. Semicond. NSL5056; Texas Instr. TIL220; Fairchild FLV117, FLV110)	703-003
R1 to R5	1/4W Carbon Resistor, 270 Ohms	7-9901-271
W1 to W7	Wire Jumper	Spec 5039
Z1 TO Z3	L.E.D. Display (Texas Instr. TIL312; Nat'l. Semicond. NSN71L; Monsanto MAN72)	201-17667
J501	12 Circuit Connector Housing (To Selector Logic)	712-00755
J505	6 Circuit Connector Housing (TO Selector Logic)	706-00755
	3 Circuit Universal Connector Plug Housing (To Selector Lights)	301-07491
	Incandescent Lamp Socket (2) (Display Lamps)	200-12787
	Wire Tie	701-08801
	Digital Display Printed Circuit Board	401-07132

REF. DESIGNATION	DESCRIPTION	ROWE PART NO.
Selector Logic Assembly	**601-08060**	
	Selector Cover with Lettering	301-07636
	Selector Logic Base	301-07625
	Insulation Pad	202-17710
	Insulated Base	202-17711
	Selector Logic Circuit Board Assembly	601-07655
	Consisting of:	
C501	Variable Capacitor, 5.1 to 50 pFD, 250V (JFD Electr. PVJ305A; Sprague-Goodman GKB50000; Johanson Mfg. 9305)	701-00260
C502 to C504	0.01 MFD Ceramic Disc Capacitor, 100V	721-00224
C505	35 MFD Electrolytic Capacitor, 50V (Motorola TT; Sprague 30D; G.E. 78F, 76F)	708-00235
C506 to C516	0.01 MFD Ceramic Capacitor, 100V	721-00224
CR501 to CR506	Silicon Diode (Selected 1N914; 1N4448; 1N4148)	707-00350
Q501 to Q503	PNP Silicon Transistor (Motorola, Fairchild, National Semiconductors MPS-A56)	704-00301
Q504 to Q515	NPN Silicon Transistor (Motorola, Fairchild, National Semiconductors MPS-A06)	708-00300
Q516 to Q518	Darlington Amplifier Transistor (National NSDu45; G.E. D40K2)	708-00302
R501	1/4 W Carbon Resistor, 220 Ohms	7-9901-221
R502	1/4 W Carbon Resistor, 1K	7-9901-102
R503	1/4 W Carbon Resistor, 220 Ohms	7-9901-221
R504	1/4 W Carbon Resistor, 1K	7-9901-102
R505	1/4 W Carbon Resistor, 220 Ohms	7-9901-221
R506	1/4 W Carbon Resistor, 1K	7-9901-102
R507 to R513	1/4 W Carbon Resistor, 100 Ohms	7-9901-101
R514 to R523	1/4 W Carbon Resistor, 1.5K	7-9901-152
R524 to R527	1/4 W Carbon Resistor, 5.6K	7-9901-562
R528	1/4 W Carbon Resistor, 15K	7-9901-153
R529	1/4 W Carbon Resistor, 1K	7-9901-102
R530	1/4 W Carbon Resistor, 15K	7-9901-153
R531	1/4 W Carbon Resistor, 1K	7-9901-102
R532	1/4 W Carbon Resistor, 15K	7-9901-153
R533	1/4 W Carbon Resistor, 1K	7-9901-102
R536	1/4 W Carbon Resistor. 15K	7-9901-153
R537, 538	1/4W Carbon Resistor, 5.6K	7-9901-562
R539 to R541	1/4W Carbon Resistor, 100 OHMS	7-9901-101
S501	4Unit DIP Switch (Molex 01-07-0104; Amp 435166-2; CTS 206-4) (Optional)	702-00430
S502	3PDT Slide Switch (U.I.D. Electronics SW-032PX)	304-07623
W502 to W504	Wire Jumper	Spec5039
Z501	MOS Selector-Display Module (L.S.I. Computer System LSI2002A)	302-07427
P501-12 P502-1 P506-1	2 Circuit Polarizing Wafer Assembly (Molex Products 09-60-1021)(5 required)	702-00750
P503	3 Circuit Polarizing Wafer Assembly (Molex Products 09-60-1031)	703-00750
P502	5 Circuit Polarizing Wafer Assembly (Molex Products 09-60-1051)	705-00750
P501	8 Circuit Polarizing Wafer Assembly (Molex Products 09-60-1081)	708-00750
P506	10 Circuit Polarizing Wafer Assembly (Molex Products 09-60-1101)	710-00750
	Selector Logic Printed Wiring Board	601-07653

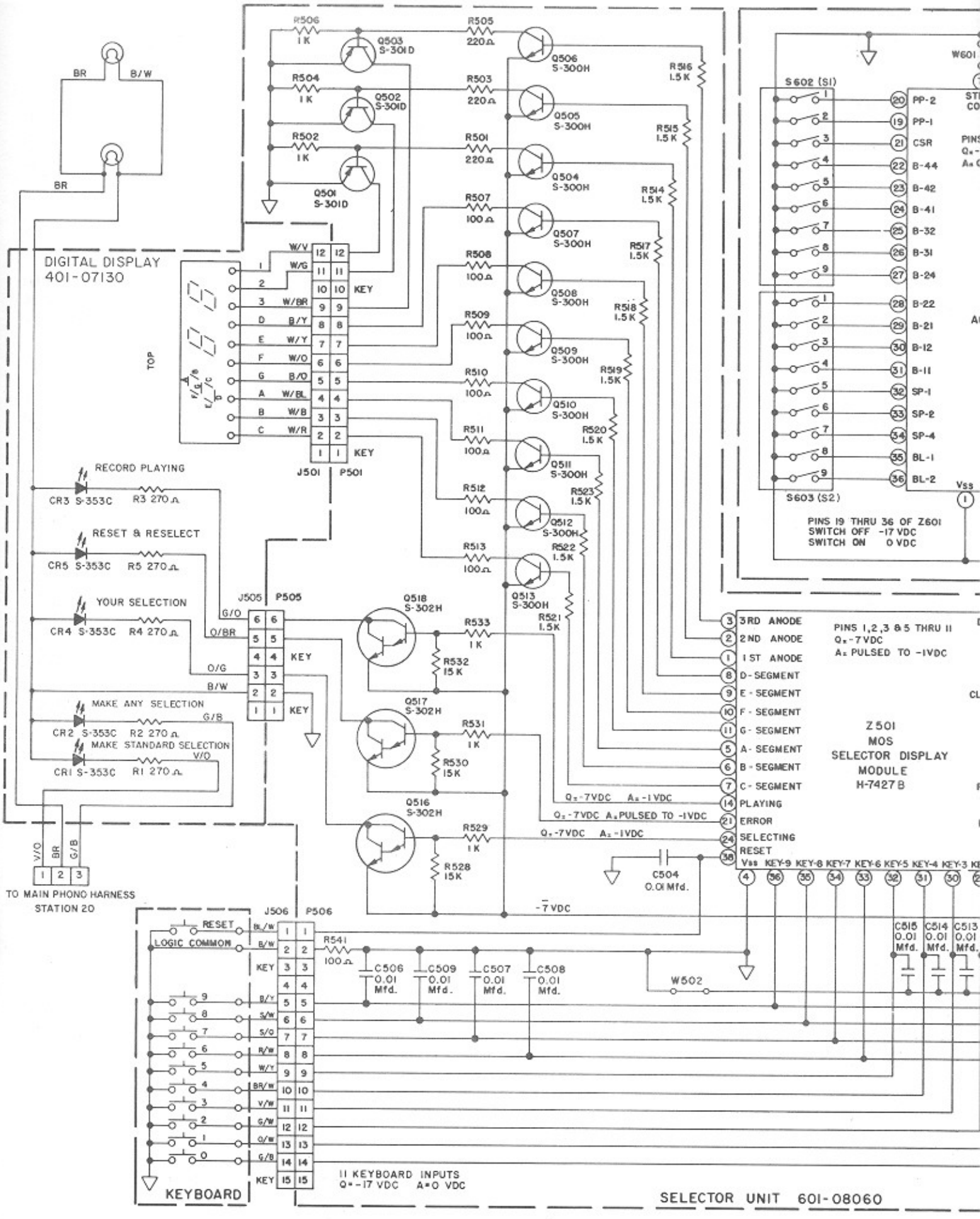

FIGURE 2-10. R-82 PHONOGRAPH SCHEMATIC DIAGRAM (Page 1 of 2)

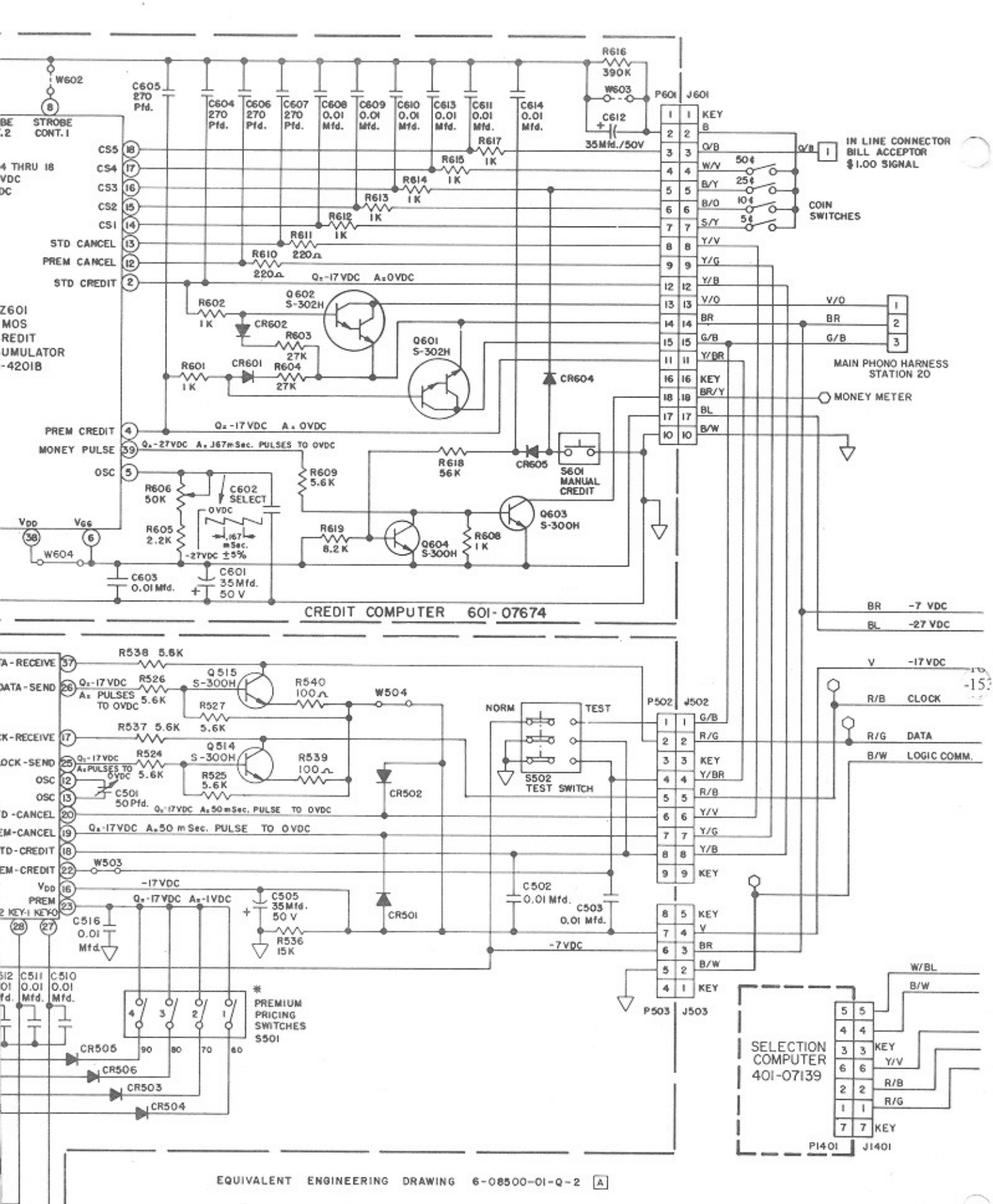

EQUIVALENT ENGINEERING DRAWING 6-08500-01-Q-2 [A]

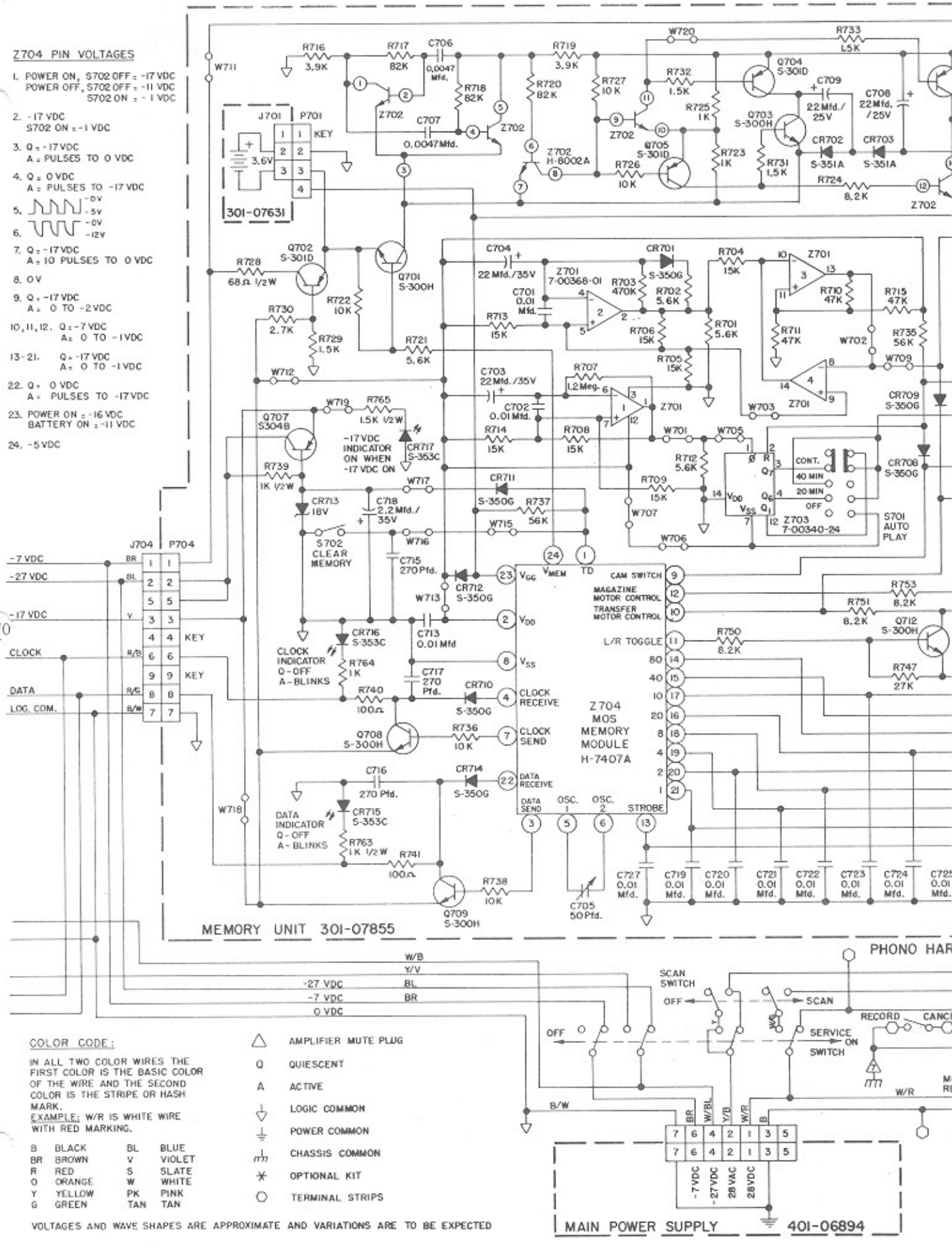
Z704 PIN VOLTAGES
1. POWER ON, S702 OFF = -17 VDC
POWER OFF, S702 OFF = -11 VDC
S702 ON = -1 VDC
2. -17 VDC
S702 ON = -1 VDC
3. Q = -17 VDC
A = PULSES TO 0 VDC
4. Q = 0 VDC
A = PULSES TO -17 VDC
5. -0V -5V
6. -0V -12V
7. Q = -17 VDC
A = 10 PULSES TO 0 VDC
8. 0V
9. Q = -17 VDC
A = 0 TO -2 VDC
10, 11, 12. Q = -7 VDC
A = 0 TO -1 VDC
13-21. Q = -17 VDC
A = 0 TO -1 VDC
22. Q = 0 VDC
A = PULSES TO -17 VDC
23. POWER ON = -16 VDC
BATTERY ON = -11 VDC
24. -5 VDC
J701 P701
KEY
3.6V
301-07631
W711
R716 3.9K
R717 82K
C706 0.0047 Mfd.
R718 82K
Z702
C707 0.0047Mfd.
R719 3.9K
R720 82K
Z702 H-8002A
R727 10K
R726 10K
W720
R732 1.5K
R725 1K
R723 1K
Q705 S-301D
Q704 S-301D
Q703 S-300H
R731 1.5K
R733 1.5K
C709 22 Mfd./25V
C708 22 Mfd./25V
CR702 S-351A
CR703 S-351A
R724 8.2K
Z702
Q702 S-301D
Q701 S-300H
R728 68Ω 1/2W
R722 10K
R730 2.7K
R729 1.5K
R721 5.6K
W712
C704 22 Mfd./35V
Z701 7-00368-01
C701 0.01 Mfd.
R713 15K
CR701 S-350G
R703 470K
R702 5.6K
R706 15K
R705 15K
R704 15K
R701 5.6K
Z701
R710 47K
R711 47K
R715 47K
R735 56K
W702
W709
C703 22 Mfd./35V
R707 1.2 Meg.
C702 0.01 Mfd.
R714 15K
R708 15K
W703
W701
W705
R712 5.6K
R709 15K
W707
W706
CR709 S-350G
CR708 S-350G
CONT.
40 MIN
20 MIN
OFF
Z703 7-00340-24
S701 AUTO PLAY
Q707 S304B
W719
R765 1.5K 1/2W
-17VDC INDICATOR ON WHEN -17 VDC ON
CR717 S-353C
R739 1K 1/2W
W717
CR711 S-350G
R737 56K
W715
CR713 18V
C718 2.2 Mfd./35V
S702 CLEAR MEMORY
W716
C715 270 Pfd.
CR712 S-350G
W713
C713 0.01 Mfd
CR716 S-353C
CLOCK INDICATOR Q-OFF A-BLINKS
R764 1K
C717 270 Pfd.
R740 100Ω
CR710 S-350G
Q708 S-300H
R736 10K
C716 270 Pfd.
CR714 S-350G
W718
DATA INDICATOR Q-OFF A-BLINKS
CR715 S-353C
R763 1K 1/2W
R741 100Ω
R738 10K
Q709 S-300H
C705 50Pfd.
J704 P704
-7 VDC
-27 VDC
-17 VDC
CLOCK
DATA
LOG. COM.
KEY
KEY
Q70
Z704 MOS MEMORY MODULE H-7407A
V_{GG}
V_{MEM}
TD
V_{DD}
V_{SS}
CLOCK RECEIVE
CLOCK SEND
DATA RECEIVE
DATA SEND
OSC. 1
OSC. 2
STROBE
CAM SWITCH
MAGAZINE MOTOR CONTROL
TRANSFER MOTOR CONTROL
L/R TOGGLE
R753 8.2K
R751 8.2K
R750 8.2K
Q712 S-300H
R747 27K
C727 0.01 Mfd.
C719 0.01 Mfd.
C720 0.01 Mfd.
C721 0.01 Mfd.
C722 0.01 Mfd.
C723 0.01 Mfd.
C724 0.01 Mfd.
C725 0.01 Mfd.
MEMORY UNIT 301-07855
PHONO HAR
W/B
Y/V
-27 VDC BL
-7 VDC BR
0 VDC
SCAN SWITCH
OFF
SCAN
RECORD
CANCI
SERVICE ON SWITCH
W/R
B/W
BR W/BL Y/B W/R B
7 6 4 2 1 3 5
7 6 4 2 1 3 5
-7VDC
-27VDC
28 VAC
28VDC
MAIN POWER SUPPLY 401-06894
COLOR CODE:
IN ALL TWO COLOR WIRES THE FIRST COLOR IS THE BASIC COLOR OF THE WIRE AND THE SECOND COLOR IS THE STRIPE OR HASH MARK.
EXAMPLE: W/R IS WHITE WIRE WITH RED MARKING.
B BLACK
BR BROWN
R RED
O ORANGE
Y YELLOW
G GREEN
BL BLUE
V VIOLET
S SLATE
W WHITE
PK PINK
TAN TAN
AMPLIFIER MUTE PLUG
Q QUIESCENT
A ACTIVE
LOGIC COMMON
POWER COMMON
CHASSIS COMMON
OPTIONAL KIT
TERMINAL STRIPS
VOLTAGES AND WAVE SHAPES ARE APPROXIMATE AND VARIATIONS ARE TO BE EXPECTED

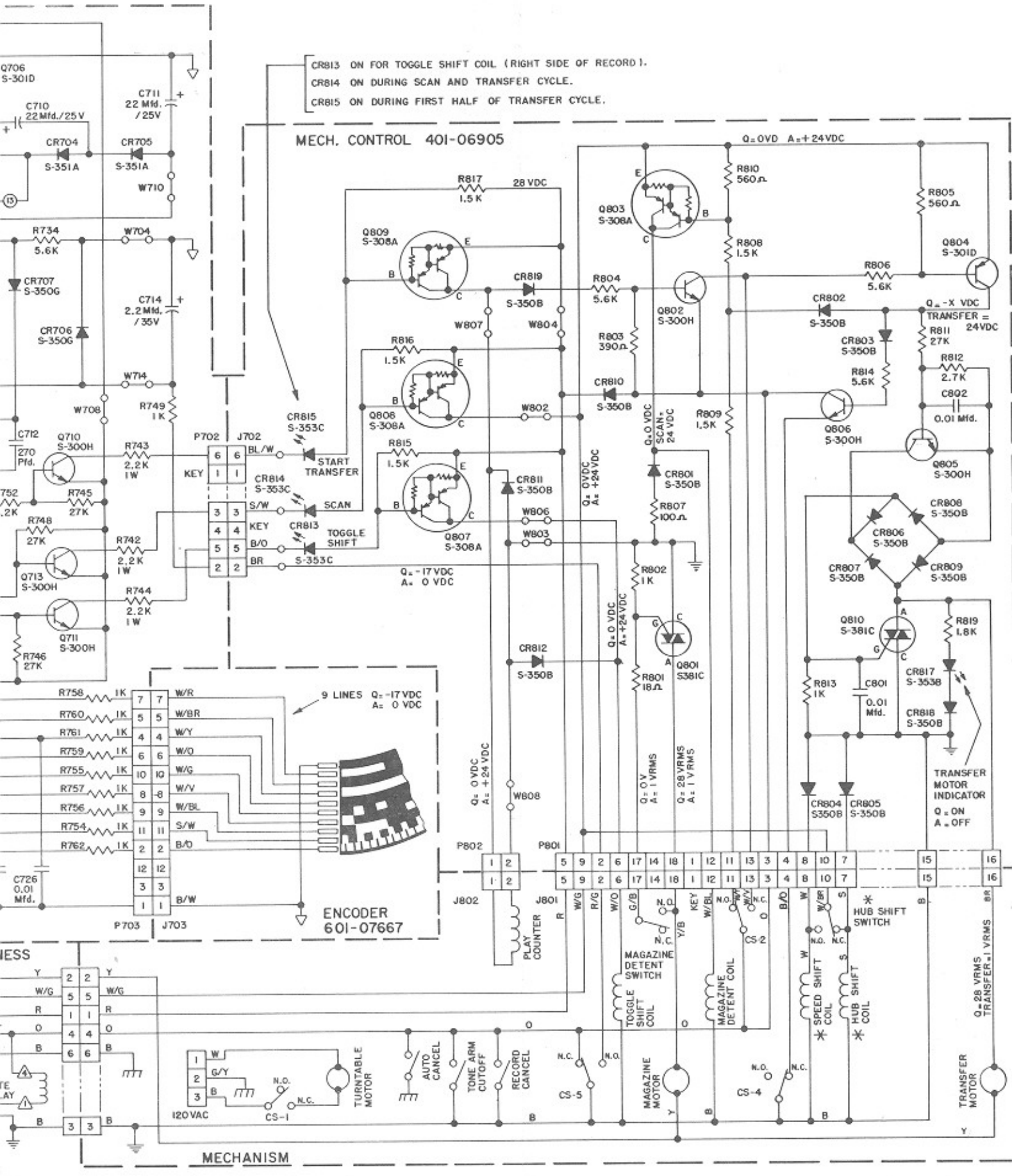

FIGURE 2-10. R-82 PHONOGRAPH SCHEMATIC DIAGRAM (Page 2 of 2)

EQUIVALENT ENGINEERING DRAWING 6-08500-01-Q-2 [A]
SHEET 2 OF 2

REF. DESIGNATION	DESCRIPTION	ROWE PART NO.
	MODEL R-82 PHONOGRAPH 601-08500 (Page 2 of 2)	
	Harness and Console Assembly (See Figure 1 of Parts Catalog for Parts)	601-08571
	Main Power Supply, 120V (See Parts Catalog and Schematic for Parts List)	401-06894
	OR Main Power Supply, 220V (See Schematic for Parts List)	402-65079
	Record Changer Mechanism Assembly (See Parts Catalog for Parts List)	604-03065
	Encoder Assembly (See Parts Catalog for Parts List)	601-07667
	Memory Unit Assembly 601-07666	
	Cover with Lettering	301-07858
	Mounting Plate	401-07143
	Insulation Pad	203-17711
	Insulation Base	206-17710
	Battery Retaining Plate	201-17960
	Battery Assembly consisting of:	201-17740
	Rechargeable NICAD Battery Pack (Burgess 475SC; G.E. 41B905CD19-G1)	301-07631
	Harness with Connector	201-17675
	Connector	703-00755
	Memory Unit Circuit Board Assembly consisting of:	601-08584
C701, C702	0.1 MFD Ceramic Disc Capacitor, 100V	721-00224
C703, C704	22 MFD Low Leakage Electrolytic Capacitor, 35V	710-00238
C705	5.1 to 50 pFD Trimmer Capacitor (JFD PVJ305A; Sprague GK850000)	701-00260
C706,C707	0.0047 MFD Mylar Capacitor, 100V	716-00240
C708 to C711	22 MFD Electrolytic Capacitor, 25V	703-00280
C712	270 pFD Ceramic Disc Capacitor, 100V	708-00224
C713	0.01 MFD Ceramic Disc Capacitor, 100V	721-00224
C714	2.2 MFD Tantalum Capacitor, 35V	712-00251
C715 to C717	270 pFD Ceramic Disc Capacitor, 100V	708-00224
C718	2.2 MFD Tantalum Capacitor, 35V	712-00251
C719 to C727	0.01 MFD Ceramic Disc Capacitor, 100V	721-00224
CR701	Silicon Diode	707-00350
CR702 to CR705	Germanium Diode	701-00351
CR706 to CR712	Silicon Diode	707-00350
CR713	Zener Diode (1N4746A)	716-00355
CR714	Silicon Diode	707-00350
CR715 to CR717	Light Emitting Diode (TI TIL220; National NSL5056; Fairchild FLV110, FLV117)	703-00353
Q701	NPN Silicon Transistor (Motorola, Fairchild, National MPSA06; TI SKA-3368)	708-00300
Q702	PNP Silicon Transistor (Motorola, Fairchild, National MPS-A56)	704-00301
Q703	NPN Silicon Transistor (Same as Q701)	708-00300
Q704 to Q706	PNP Silicon Transistor (Same as Q702)	704-00301
Q707	PNP Silicon Tansistor (Motorola, T.I.TIP32B; R.C.A.RCA32B; Fairchild 2N6126)	702-00304
Q708 to Q713	NPN Silicon Transistor (Same as Q701)	708-00300
R701, R702	1/4W Carbon Resistor, 5.6K, 5%	7-9901-562
R703	1/4W Carbon Resistor, 470K, 5%	7-9901-474
R704 to R706	1/4W Carbon Resistor, 15K, 5%	7-9901-153
R707	1/4W Carbon Resistor, 1.2 Meg, 5%	7-9901-125
R708, R709	1/4W Carbon Resistor, 15K, 5%	7-9901-153
R710, R711	1/4W Carbon Resistor, 47K, 5%	7-9901-473
R712	1/4W Carbon Resistor, 5.6K, 5%	7-9901-562
R713, R714	1/4W Carbon Resistor, 15K, 5%	7-9901-153
R715	1/4W Carbon Resistor, 47K, 5%	7-9901-473
R716	1/4W Carbon Resistor, 3.9K, 5%	7-9901-392
R717, R718	1/4W Carbon Resistor, 82K, 5%	7-9901-823
R719	1/4W Carbon Resistor, 3.9K, 5%	7-9901-392
R720	1/4W Carbon REsistor, 82K, 5%	7-9901-823
R721	1/4W Carbon Resistor, 5.6K, 5%	7-9901-562
R722	1/4W Carbon Resistor, 10K, 5%	7-9901-103
R723	1/4W Carbon Resistor, 1K, 5%	7-9901-102
R724	1/4W Carbon Resistor, 8.2K, 5%	7-9901-822
R725	1/4W Carbon Resistor, 1K, 5%	7-9901-102
R726, R727	1/4W Carbon Resistor, 10K, 5%	7-9901-103
R728	1/2W Carbon Resistor, 68 Ohms	719-00102
R729	1/4W Carbon Resistor, 1.5K, 5%	7-9901-152
R730	1/4W Carbon Resistor, 2.7K, 5%	7-9901-272
R731 to R733	1/4W Carbon Resistor, 1.5K, 5%	7-9901-152
R734	1/4W Carbon Resistor, 5.6K, 5%	7-9901-562
R735	1/4W Carbon Resistor, 56K, 5%	7-9901-563
R736	1/4W Carbon Resistor, 10K, 5%	7-9901-103

(Continued in next column)

R-82 PHONOGRAPH ELECTRONIC PARTS LIST (Page 2 of 2)
(See Schematic, page 2-23)

REF. SIGNATION	DESCRIPTION	ROWE PART NO.
	Memory Unit Assembly (Continued)	
R737	1/4W Carbon Resistor, 56K, 5%	7-9901-563
R738	1/4W Carbon Resistor, 10K, 5%	7-9901-103
R739	1/2W Carbon Resistor, 1K	719-00106
R740, R741	1/4W Carbon Resistor, 100 Ohms, 5%	7-9901-101
R742 to R744	1W Carbon Resistor, 2.2K	721-00108
R745 to R748	1/4W Carbon Resistor, 27K, 5%	7-9901-273
R749	1/4W Carbon Resistor, 1K, 5%	7-9901-102
R750 to R753	1/4W Carbon Resistor, 8.2K, 5%	7-9901-822
R754 to R762	1/4W Carbon Resistor, 1K, 5%	7-9901-102
R763, R764	1/2W Carbon Resistor, 1K	719-00106
R765	1/2W Carbon Resistor, 1.5K	705-00104
S701	"Auto Play" 4 Position Double Pole Slide Switch (CW Ind. G141-L-3)	301-07862
S702	"Clear Memory" Pushbutton Switch (Oak Series 415)	201-17733
Z701	Quad Comparator I.C. (Nat'l LM3302N, LM339N; Fairchild MA3302P; Motorola MC3302P)	701-00368
Z702	I.C. Transistor Array (Fairchild CA3046; Sprague ULN2046A, ULN2086A; RCA CA3146AE, CA3146E, CA3046, CA3086)	301-08002
Z703	CMOS 7 Stage Binary Counter I.C. (RCA CD4024BP)	724-00340
Z704	MOS Memory Module I.C. (L.S.I. LSI2001A)	301-07407
	Two Pin Receptacle (Molex 09-60-1021)	702-00750
	Three Pin Receptacle (Molex 09-60-1031)	703-00750
	Four Pin Receptacle (Molex 09-60-1041)	704-00750
	Eight Pin Receptacle (Molex 09-60-1081)	708-00750
	Printed Circuit Board	601-08583
	Mechanism Control Unit Assembly 401-06905	
	Mechanism Control Cover with Lettering	301-07639
	Circuit Board Support (2 Required)	706-05000
	Bearing	703-01460
	P.C. Board Mounting Bracket	301-07723
	Mechanism Control Circuit Board Assembly consisting of:	401-06900
C801, C802	0.01 MFD Ceramic Disc Capacitor, 100V	721-00224
CR801 to CR812	Silicon Diode (1N4002)	702-00350
CR813 to CR815, CR817	Light Emitting Diode (Hewlett-Packard 5082-488S; Nat'l.Semiconductors NSL-5056)	703-00353
CR818, CR819	Silicon Diode (Same as CR801)	702-00350
Q801	Triac Thyristor (RCA T2801B, T2800B, T2500B; Texas Instr. TIC226B)	703-00381
Q802	NPN Silicon Transistor (Motorola, Fairchild, National Semiconductor MPS-A06)	708-00300
Q803	PNP Darlington Power Silicon Transistor (Texas Instr. TIP136; Motorola 2N6041)	701-00308
Q804	PNP Silicon Transistor (Motorola, Fairchild, National Semiconductor MPS-A56)	704-00301
Q805, Q806	NPN Silicon Transistor (Same as Q802)	708-00300
Q807 to Q809	PNP Darlington Power Silicon Transistor (Same as Q803)	701-00308
Q810	Triac Thyristor (Same as Q801)	703-00381
R801	1/4W Carbon Resistor, 18 Ohms, 5%	7-9901-180
R802	1/4W Carbon Resistor, 1K, 5%	7-9901-102
R803	1/4W Carbon Resistor, 390 Ohms, 5%	7-9901-391
R804	1/4W Carbon Resistor, 5.6K, 5%	7-9901-562
R805	1/4W Carbon Resistor, 560 Ohms, 5%	7-9901-561
R806	1/4W Carbon Resistor, 5.6K, 5%	7-9901-562
R807	1/4W Carbon Resistor, 100 Ohms, 5%	7-9901-101
R808, R809	1/2W Carbon Resistor, 1.5K	705-00104
R810	1/4W Carbon Resistor, 560 Ohms, 5%	7-9901-561
R811	1/4W Carbon Resistor, 27K, 5%	7-9901-273
R812	1/4W Carbon Resistor, 2.7K, 5%	7-9901-272
R813	1/4W Carbon Resistor, 1K, 5%	7-9901-102
R814	1/4W Carbon Resistor, 5.6K, 5%	7-9901-562
R815 to R817	1/4W Carbon Resistor, 1.5K, 5%	7-9901-152
R819	1/2W Carbon Resistor, 1.8K,	706-00104
W802 to W804, W806 to W808	Wire Jumper	Spec. 5039
	Memory Interconnect Harness Assembly	301-07550
P802	2 Circuit Polarizing Wafer Assembly (Molex Products 09-60-1021)	702-00750
P801	4 Circuit Polarizing Wafer Assembly (Molex Products 09-60-1041)	704-00750
P801-1	12 Circuit Polarizing Wafer Assembly (Molex Products 09-60-1121)	712-00750
	Triac Heat Sink	201-17829
	Rectangular Washer (2 Required)	201-17761
	Mica Washer (2 Required)	201-15208
	Mechanism Control Printed Circuit Wiring Board	401-06899

MAIN POWER SUPPLY (120V)	401-06894	(See also Figure 6 – Parts Catalog)	
MAIN POWER SUPPLY (220V)	402-65079	(See also Figure 6 – Parts Catalog)	

POWER SUPPLY CIRCUIT BOARD ASSEMBLY 401-06850

C1001	0.1 MFD Mylar Capacitor, 100V (Paktron FM1100; Amperex C280; Electromotive P91041-1)	702-00240
C1002	0.01 MFD Ceramic Disc Capacitor, 100V	721-00224
C1003	0.1 MFD Mylar Capacitor, 100V (Same as C1001)	702-00240
C1004	1250 MFD Electrolytic Capacitor, 50V (Sprague 43D; Mallory TCW)	710-00233
C1005	200 MFD Electrolytic Capacitor, 75V (Callins ARD; Motorola TCW; Cornell Dubilier WBR)	704-00235
C1006	3000 MFD Electrolytic Capacitor, 15V (Motorola TCW; Sprague 39D; Callins ARD)	711-00235
C1007	270 pFD Ceramic Disc Capacitor, 100V	708-00224
CR1001 to CR1006	Silicon Diode (1N4004)	704-00350
CR1007 to CR1014	Silicon Diode (Same as CR1001)	702-00350
F1001	3 Amp Cartridge Fuse (Buss MDL)	722-00721
F1002	1 Amp Cartridge Fuse (Buss MDL)	705-00721
F1003	2.5 Amp Cartridge Fuse (Buss MDL)	725-00721
P1001	P.C. Board Header (6 circuit Universal Mate-N-Lok no. 350431-1)	304-07635
Q1001	Silicon Transistor, NPN (Motorola MJE5191; RCA No. RCA31A; Fairchild 2N6122)	705-00330
Q1002	Silicon Transistor, PNP (Motorola MJE5195; RCA No. RCA32B; Fairchild 2N6126)	702-00304
Q1003	Silicon Transistor, PNP (Motorola MJE5194; RCA No. RCA32A; Fairchild 2N6125)	701-00304
Q1004, Q1005	Silicon Transistor, NPN (Motorola, Fairchild, Nat'l. Semiconductor MPSA06)	708-00300
Q1006 to Q1009	Silicon Transistor, PNP (Motorola, Fairchild, Nat'l. Semiconductor MPSA56)	704-00301
R1001	2W Wirewound Resistor, 0.82 Ohm (I.R.C. Type BWH)	716-00113
R1002	1/4W Carbon Resistor, 3.3K	7-9901-332
R1003	1/4W Film Resistor, 390 Ohms ± 2%	7-9902-391
R1004	1/4W Carbon Resistor, 3.3K	7-9901-332
R1005	1/4W Film Resistor, 4.7K ± 2%	7-9902-472
R1006	1/2W Carbon Resistor, 3.3K	720-00107
R1007	2W Wirewound Resistor, 10 Ohms	704-00113
R1008	1/4W Carbon Resistor, 1.2K	7-9901-122
R1009	1/4W Carbon Resistor, 2.2K	7-9901-222
R1010	1/4W Carbon Resistor, 47K	7-9901-473
R1011	1/4W Carbon Resistor, 15K	7-9901-153
R1012	2W Wirewound Resistor, 0.47 Ohm (I.R.C. Type BWH)	714-00113
R1013	1/4W Carbon Resistor, 3.3K	7-9901-332
R1014	1/4W Film Resistor, 68 Ohms ± 2%	7-9902-680
R1015	1/4W Carbon Resistor, 3.3K	7-9901-332
R1016	1/2W Carbon Resistor, 330 Ohms	719-00107
R1017	1/4W Film Resistor, 560 Ohms ± 2%	7-9902-561
R1018	1/4W Fixed Film Resistor, 27K ± 2%	7-9902-273
R1019	1/4W Fixed Film Resistor, 4.22K ± 2% (R-Ohm Corp.; TRW Electronics; Dale Electronics)	702-00122
R1020, R1021	1/4W Fixed Film Resistor, 15K ± 2%	7-9902-153
R1022	1/4W Carbon Resistor, 1K	7-9901-102
W1001, W1002	Bare Wire	000-05039
Z1001	Linear I.C. Voltage Regulator (Teledyne 723CJ, 723CL; Fairchild u9A7723393; u6A7723393; National Semiconductor LM723CN, LM723CD; Signetics ua723CA,N5723A)	703-00365
	Heat Sink Bracket	301-07630
	Mica Washer (RCA DF103B; Thermalloy 43-77-8) (3 Required)	201-15208
	Triangular Washer (ESNA 22-NM-62) (3 Required)	201-17761
	Cable Tie (6 Required)	706-08001
	Fuse Clip (6 Required)	200-50755
	Power Supply Circuit Board	601-07686

VOLTAGE INDICATOR (L.E.D.) CIRCUIT BOARD ASSEMBLY 401-06960

CR1101	Silicon Diode (Selected 1N914B; 1N4448; 1N4148)	707-00350
CR1102 to CR1105	Light Emitting Diode (Texas Instr. TIL-220; Nat'l. Semi-Cond. NSL-5056 Hewlett Packard 5082-488D)	703-00353
R1101 to R1103	1/4W Carbon Resistor, 2.7K	7-9900-27
R1104	1/4W Carbon Resistor, 560 Ohms	7-9900-56
	L.E.D. Circuit Board	401-0695

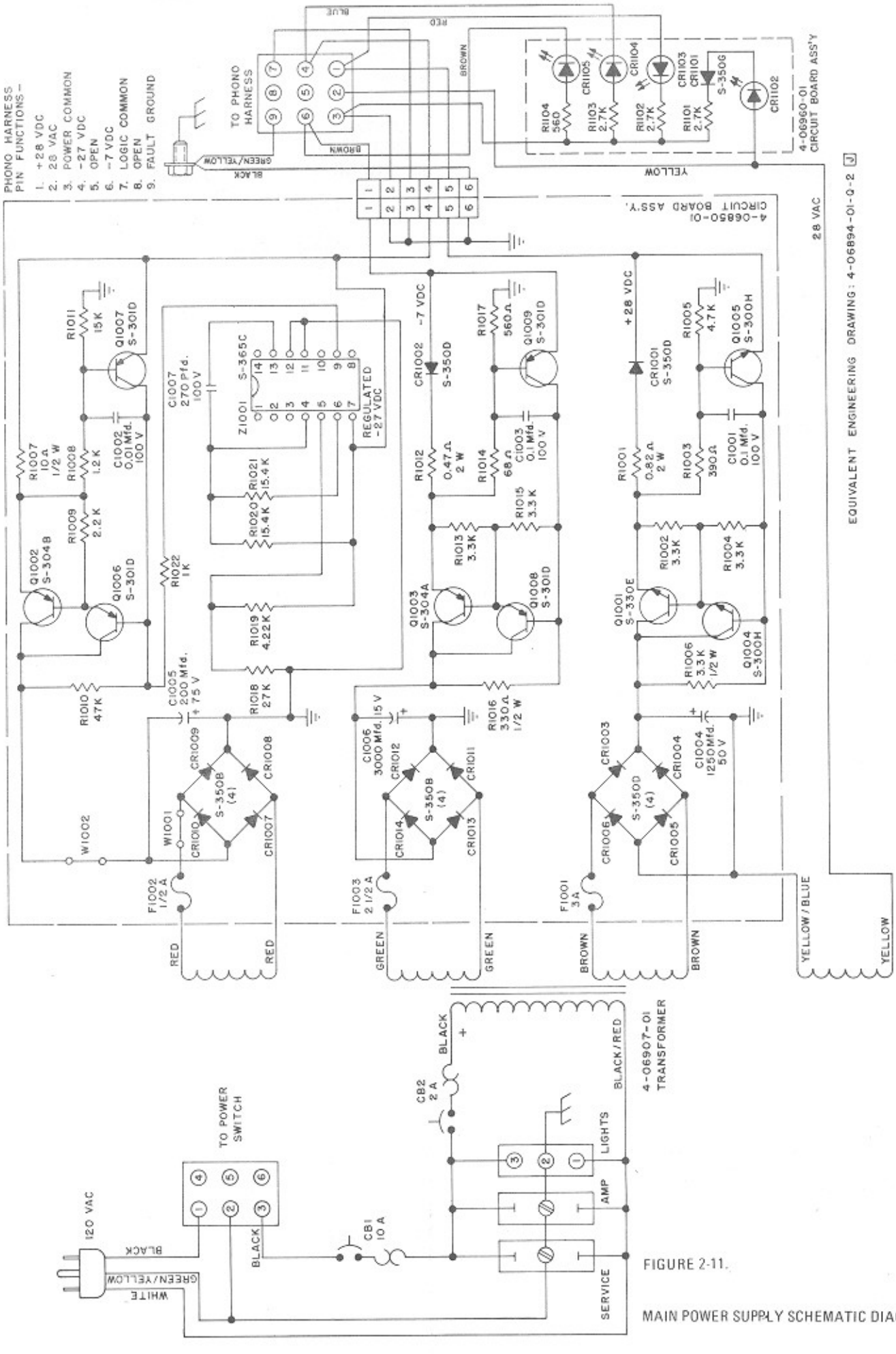

FIGURE 2-11.

MAIN POWER SUPPLY SCHEMATIC DIAGRAM

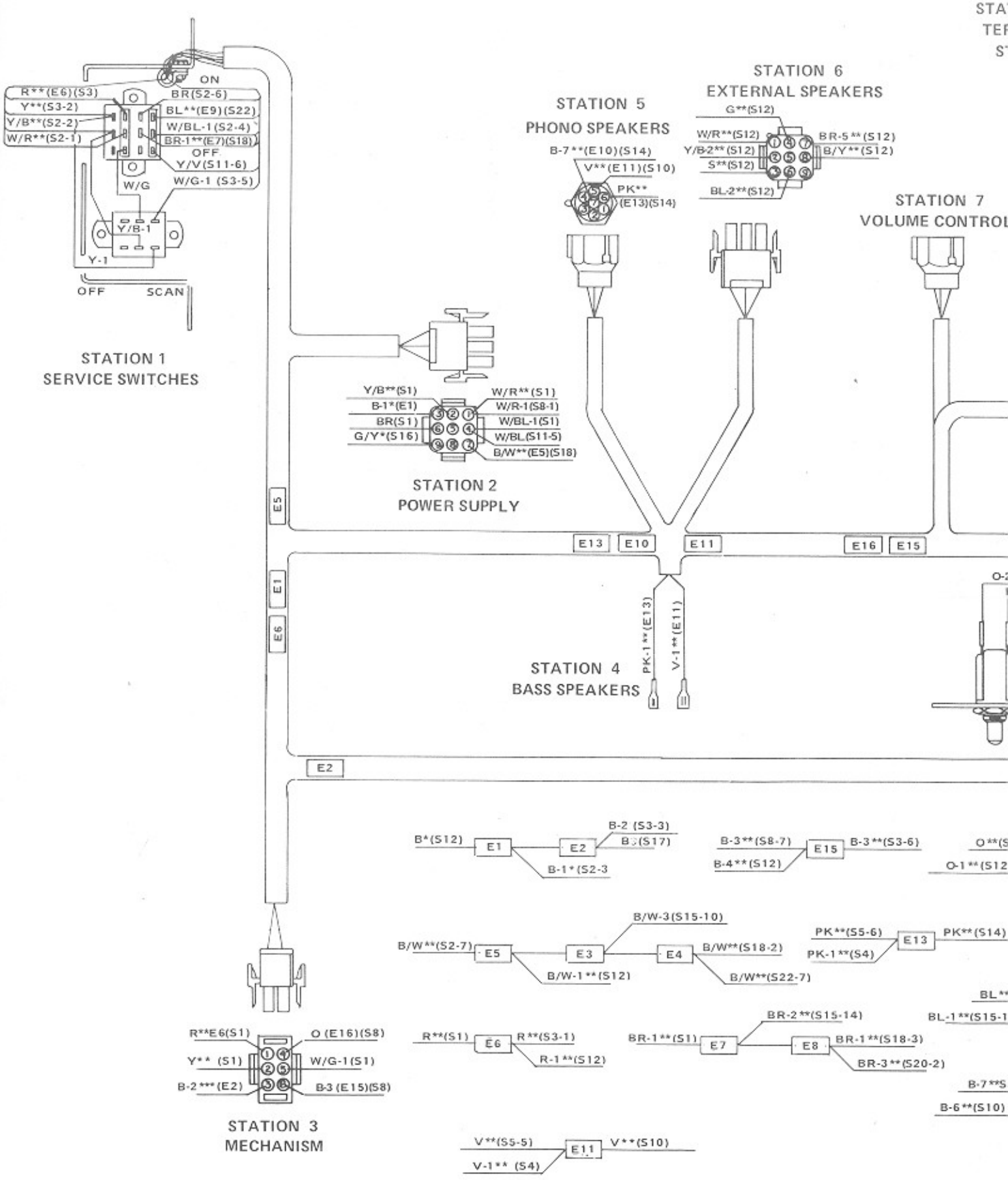

FIGURE 2-12. PHONO HARNESS WIRING DIAGRAM

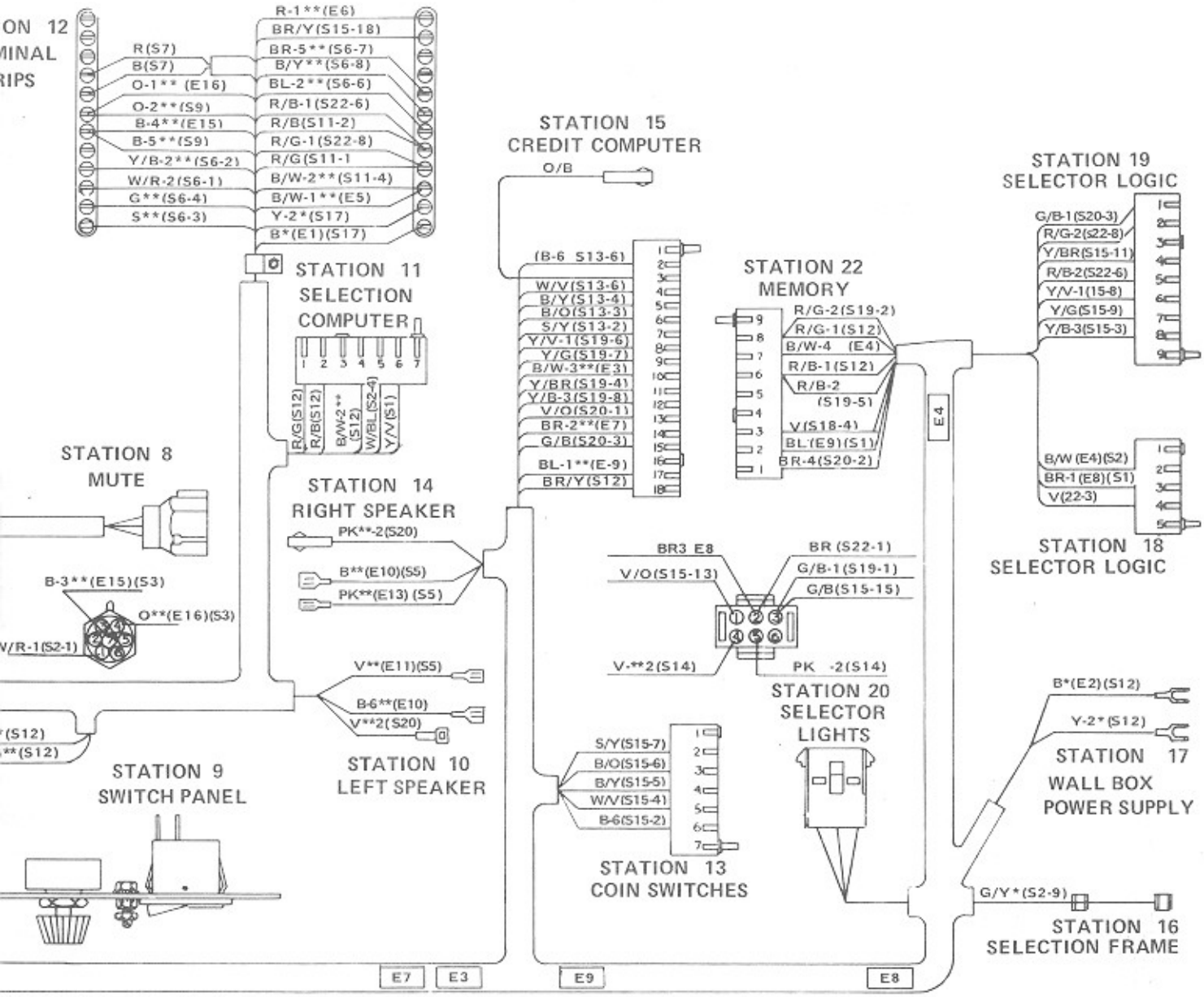

4) E16 O**(S3-4)

1) E9 BL**(S22-2)

7) E10 B-7**(S14)

IN ALL TWO COLOR WIRES THE FIRST COLOR IS THE BASIC COLOR OF THE WIRE AND THE SECOND COLOR IS THE STRIPE OR HASH MARK.

EXAMPLE: W/R IS WHITE WIRE WITH RED MARKING.

B	BLACK	BL	BLUE
BR	BROWN	V	VIOLET
R	RED	S	SLATE
O	ORANGE	W	WHITE
Y	YELLOW	PK	PINK
G	GREEN	TAN	TAN

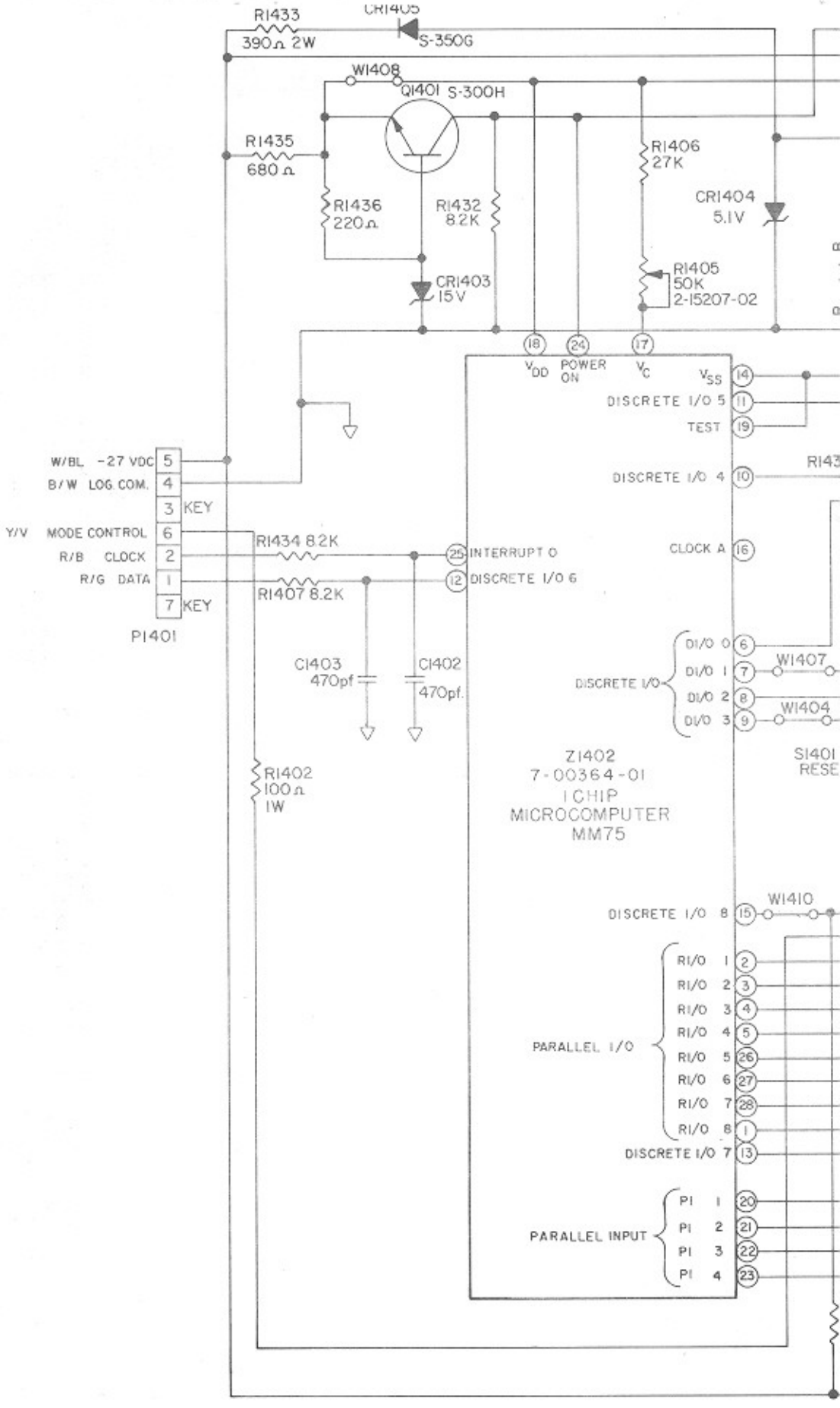
R1433
390Ω 2W
CR1405
S-350G
W1408
Q1401 S-300H
R1435
680Ω
R1436
220Ω
R1432
8.2K
R1406
27K
CR1404
5.1V
R1405
50K
2-15207-02
CR1403
15V
18
24
17
VDD
POWER ON
VC
VSS
14
DISCRETE I/O 5
11
TEST
19
DISCRETE I/O 4
10
W/BL -27 VDC 5
B/W LOG COM. 4
3 KEY
Y/V MODE CONTROL 6
R/B CLOCK 2
R/G DATA 1
7 KEY
P1401
R1434 8.2K
R1407 8.2K
25 INTERRUPT O
12 DISCRETE I/O 6
CLOCK A
16
C1403
470pf
C1402
470pf.
DI/O 0 6
DI/O 1 7
DI/O 2 8
DI/O 3 9
DISCRETE I/O
W1407
W1404
R1402
100Ω
1W
Z1402
7-00364-01
1 CHIP
MICROCOMPUTER
MM75
W1410
DISCRETE I/O 8
15
RI/O 1 2
RI/O 2 3
RI/O 3 4
RI/O 4 5
RI/O 5 26
RI/O 6 27
RI/O 7 28
RI/O 8 1
PARALLEL I/O
DISCRETE I/O 7
13
PI 1 20
PI 2 21
PI 3 22
PI 4 23
PARALLEL INPUT

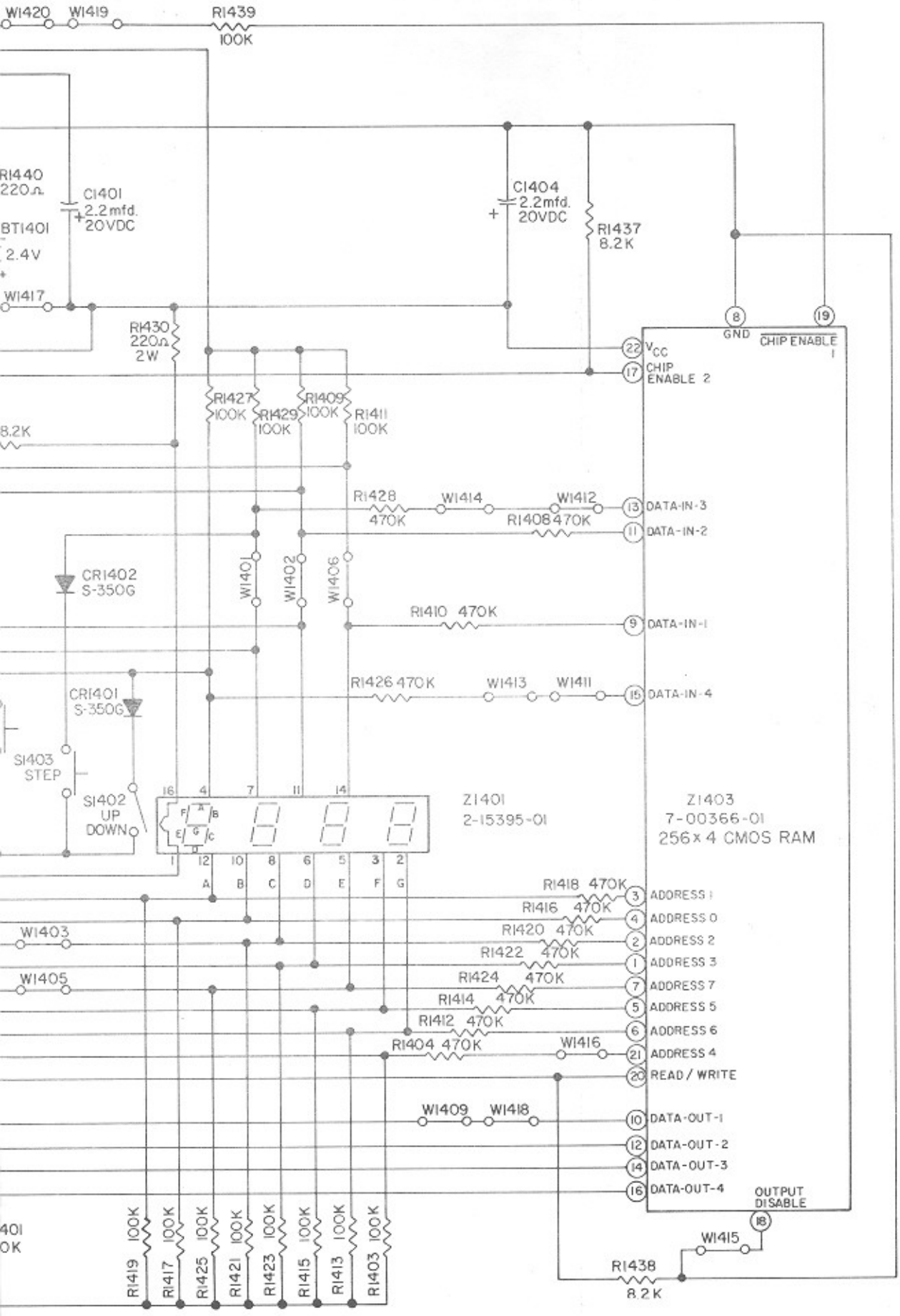

FIGURE 2-13. SELECTION COMPUTER SCHEMATIC DIAGRAM

FOR EQUIV. ENG'G DWG. SEE 4-07139-01-Q-2

Selection Computer Assembly

	Cover with Lettering	301-07860
	Display Window Light Filter	204-17819
	Mounting Plate	301-07861
	Insulation Pad	207-17710
	Insulation Base	204-17711
	Selection Computer Circuit Board consisting of:	601-07434
BT1401	Battery Assembly	201-17965
	Rechargeable NICAD Battery Pack (Saft Storage Battery Div. 2VRO.5AA)	302-07631
	3 Pin MATE-N-LOK Receptacle (Amphenol 1-480304-1)	201-12444
C1401	2.2 MFD Tantalum Capacitor, 20V	707-00251
C1402,C1403	470 pFD Ceramic Disc Capacitor, 100V	701-00224
C1404	2.2 MFD Tantalum Capacitor, 20V	707-00251
CR1401,CR1402	Silicon Diode	707-00350
CR1403	Zener Diode, 15V -1% (1N965B)	722-00355
CR1404	Zener Diode, 5.1V -5% (1N4733A)	701-00355
CR1405	Silicon Diode	707-00350
Q1401	NPN Silicon Transistor (National, Fairchild, Motorola MPS-A06; T.I. SKA-3368)	708-00300
R1401	1/4W Carbon Resistor, 100K, 5%	7-9901-104
R1402	1W Carbon Resistor, 100 Ohms	704-00103
R1403	1/4W Carbon Resistor, 100K, 5%	7-9901-104
R1404	1/4W Carbon Resistor, 470K, 5%	7-9901-474
R1405	Trimmer Potentiometer, 50K (Bourns 3389; Weston 840P; CTS 362Y)	202-15207
R1406	1/4W Carbon Resistor, 27K, 5%	7-9901-273
R1407	1/4W Carbon Resistor, 8.2K, 5%	7-9901-822
R1408	1/4W Carbon Resistor, 470K, 5%	7-9901-474
R1409	1/4W Carbon Resistor, 100K , 5%	7-9901-104
R1410	1/4W Carbon Resistor, 470K , 5%	7-9901-474
R1411	1/4W Carbon Resistor, 100K , 5%	7-9901-104
R1412	1/4W CArbon Resistor, 470K, 5%	7-9901-474
R1413	1/4W Carbon REsistor, 100K ,5%	7-9901-104
R1414	1/4W Carbon Resistor, 470K , 5%	7-9901-474
R1415	1/4W Carbon Resistor, 100K , 5%	7-9901-104
R1416	1/4W Carbon Resistor 470K , 5%	7-9901-474
R1417	1/4W Carbon Resistor, 100K , 5%	7-9901-104
R1418	1/4W Carbon Resistor, 470K , 5%	7-9901-474
R1419	1/4W Carbon Resistor, 100K , 5%	7-9901-104
R1420	1/4W Carbon Resistor, 470K , 5%	7-9901-474
R1421	1/4W Carbon Resistor, 100K , 5%	7-9901-104
R1422	1/4W Carbon Resistor, 470K , 5%	7-9901-474
R1423	1/4W Carbon Resistor, 100K , 5%	7-9901-104
R1424	1/4W Carbon Resistor, 470K , 5%	7-9901-474
R1425	1/4W Carbon Resistor, 100K , 5%	7-9901-104
R1426	1/4W Carbon Resistor, 470K , 5%	7-9901-474
R1427	1/4W Carbon Resistor, 100K , 5%	7-9901-104
R1428	1/4W Carbon Resistor, 470K , 5%	7-9901-474
R1429	1/4W Carbon Resistor, 100K , 5%	7-9901-104
R1430	2 W Carbon Resistor, 200 Ohms	723-00105
R1431,R1432	1/4W Carbon Resistor, 8.2K, 5%	7-9901-822
R1433	2W Carbon Resistor, 390 Ohms	703-00126
R1434	1/4W Carbon Resistor, 8.2K, 5%	7-9901-822
R1435	1/4W Carbon Resistor, 680 Ohms, 5%	7-9901-681
R1436	1/4W Carbon Resistor, 220 Ohms, 5%	7-9901-221
R1437,R1438	1/4W Carbon Resistor, 100K, 5%	7-9901-104
R1440	1/4W Carbon Resistor, 220 Ohms, 5%	7-9901-221
S1401	"RESET" Pushbutton Switch (Oak Series 415)	201-17733
S1402	"MOST POPULAR/LEAST POPULAR" DPDT Slide Switch (U.I.D. Elect. SW622-P-8K-T6)	305-07623
S1403	"ADVANCE" Pushbutton Switch (Oak Series 415)	201-17733
Z1401	Vacuum Fluorescent Display (Futuba 4-BT-03; Nippon Electric LD8165)	201-15395
Z1402	Micro Computer (Rockwell MM75)	701-00364
Z1403	CMOS Memory, 256K X 4 RAM	701-00366
P1401	Two Pin Receptacle (Molex 09-60-1021)	702-00750
	Three Pin Receptacle (Molex 09-60-1031)	703-00750
	Battery Harness consisting of:	201-17964
	Pin Housing (Amphenol 1-480319-0)	206-12445
	Display Retainer	201-17954
	Printed Circuit Board	601-07433

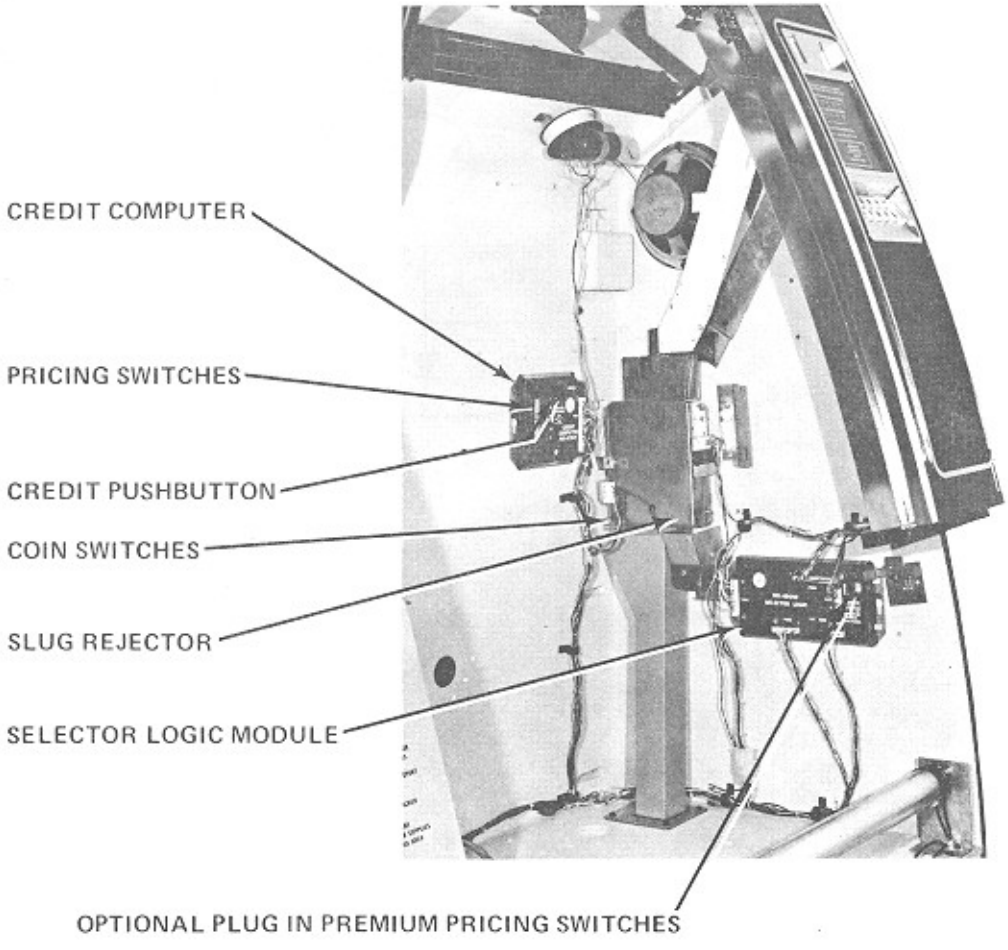

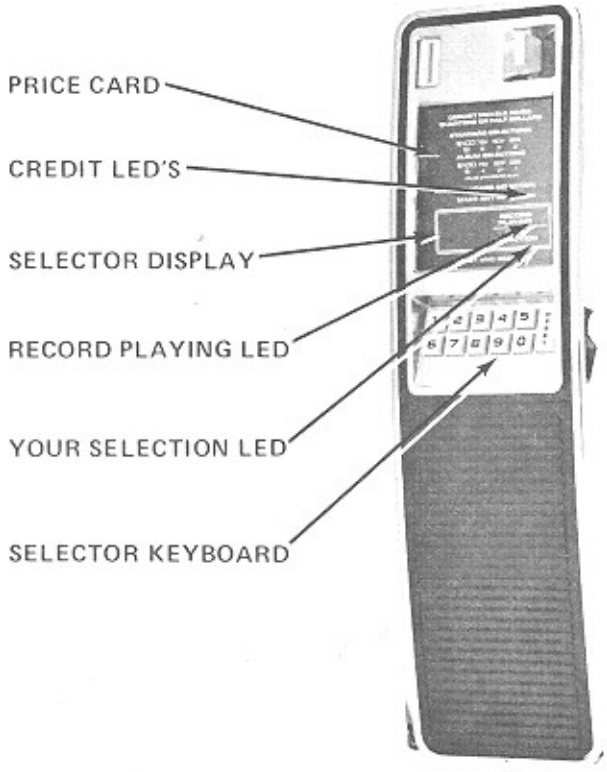

FIGURE 2-13. CREDIT AND SELECTION SYSTEM MAJOR COMPONENTS