SEQUENCE OF OPERATION

The sequence of operation diagrams which follow illustrate the phonograph operational cycle.

The first diagram shows voltage and common connections to the electronic circuit modules, and the electrical components located on the mechanism.

The remaining diagrams illustrate which signals are active during each point in the phonograph operational cycle.

Most of the voltages listed on the block diagram can be measured with an inexpensive VOM.

Pulsed signals are represented by a broken line.

SEQUENCE DIAGRAM 1

Power is turned on. Voltages and commons are applied to circuits and components.

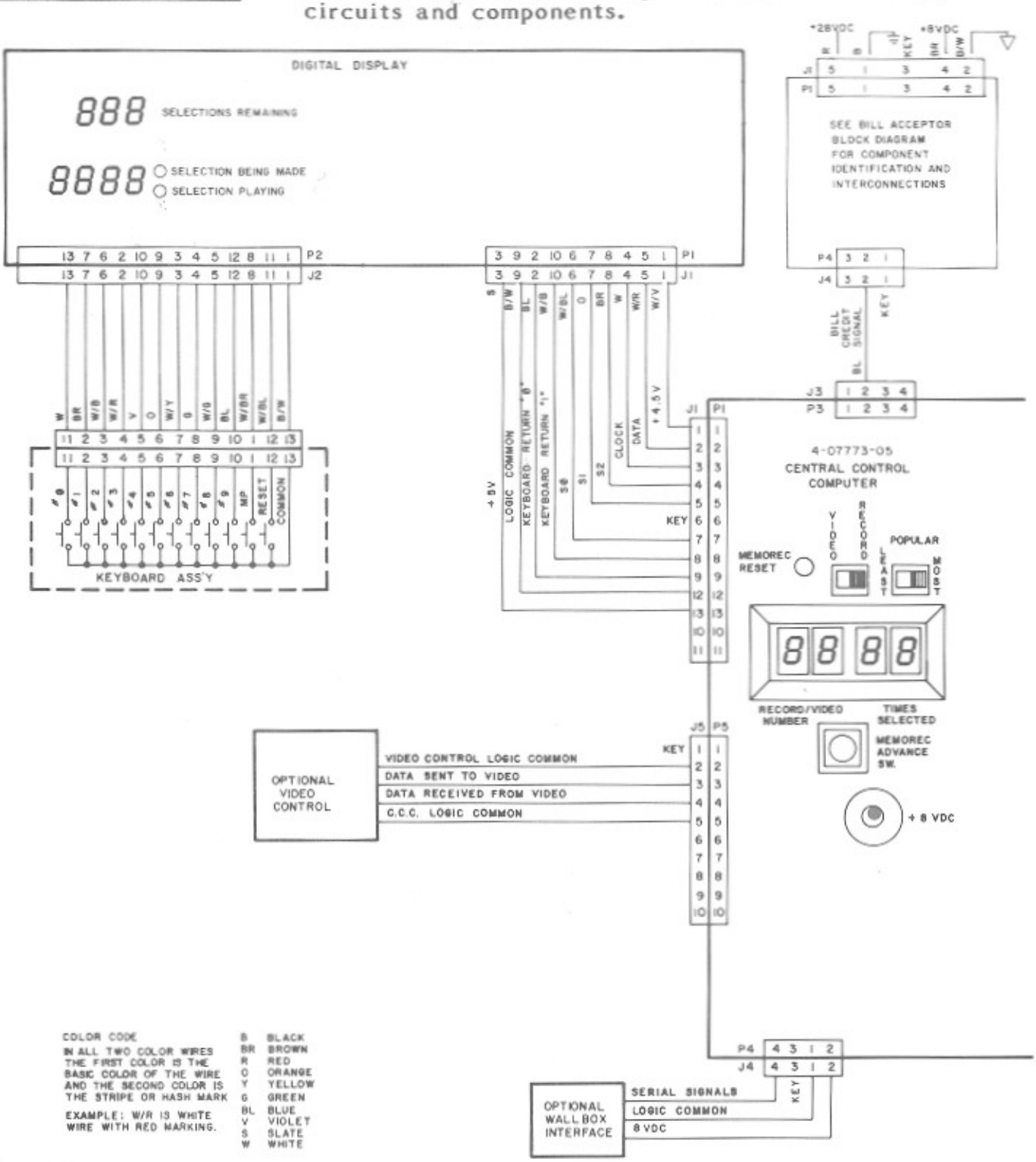

1. Power flows through Power Cord and Power Switch to energize Power Supply. The voltages go through Service Switch and energize 28 VAC, +28 VDC and +8 VDC busses. The +8 VDC LED on the C.C.C.* lights and the +5 VDC and +28 VDC LED's on the Bill Acceptor Control Computer light.

2. The 28 VAC goes to the Magazine Motor, Transfer Motor and Mechanism Control. The 28 VAC is routed through the Mechanism Control to the Turntable Motor.

3. The +28 VDC goes to the Amplifier Mute Plug, Mechanism Control and Bill Acceptor.

*C.C.C. is an abbreviation for Central Control Computer.

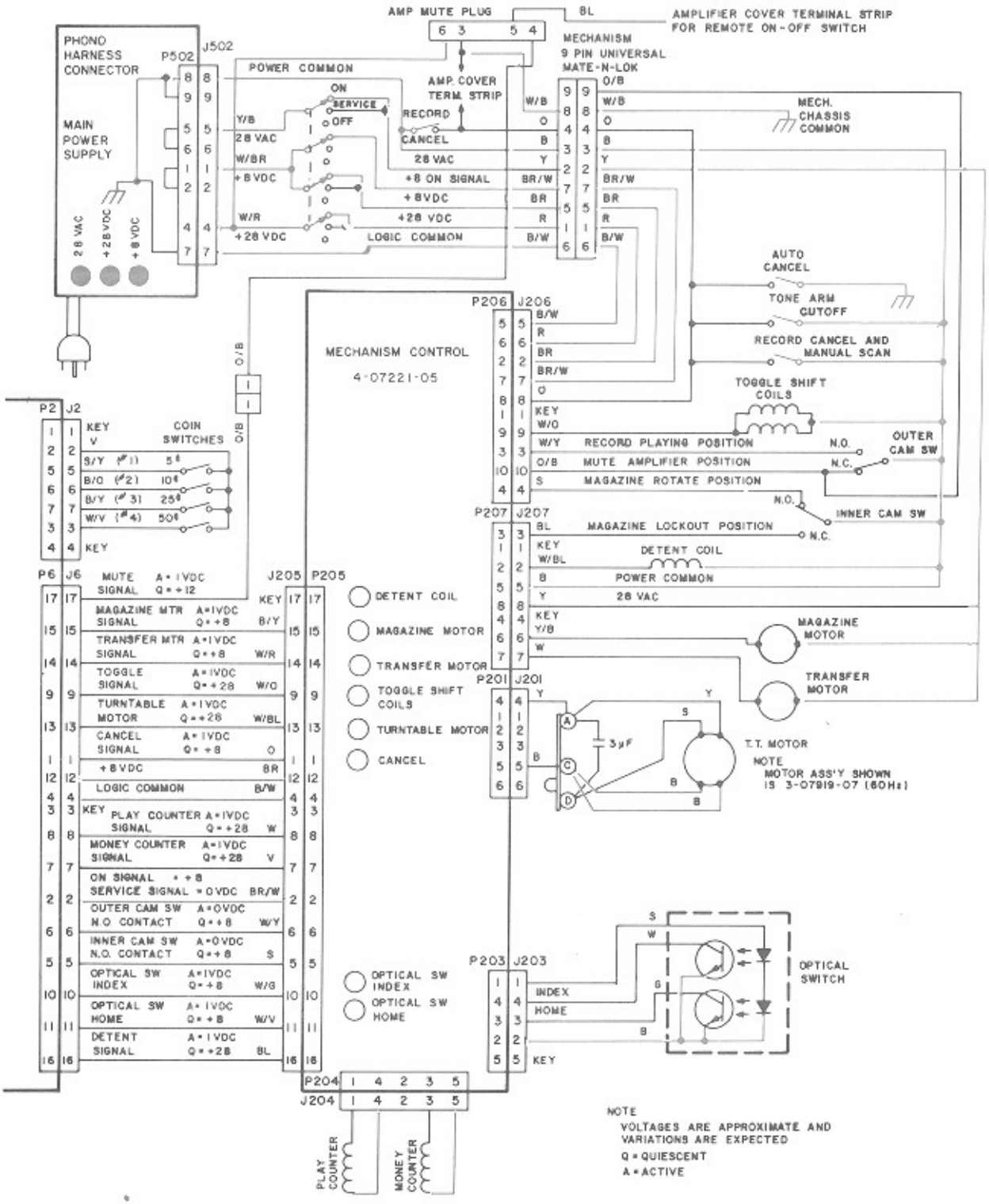

4. Power Common goes to the Outside Record Cancel, Manual Scan Switch, Tone Arm Cutoff, Toggle Shift Coils, Inner and Outer Cam Switches, Detent Coil, Mechanism Control and Bill Acceptor. It is routed through Mechanism Control to Play and Money Counters.

5. The +8 VDC and the Logic Common go to the Mechanism Control and the Bill Acceptor. Both are routed through Mechanism Control to the C.C.C and Logic Common to Optical Switch. The C.C.C. routes them to the Wallbox Interface.

6. The "+8 ON" signal is routed through Mechanism Control to the C.C.C.

7. Mech. Chassis Common goes to the Amplifier Mute Plug, Amplifier Cover Terminal Strip and Auto Cancel.

SEQUENCE DIAGRAM 2

C.C.C. senses power turned on. No selections or credit are in memory.

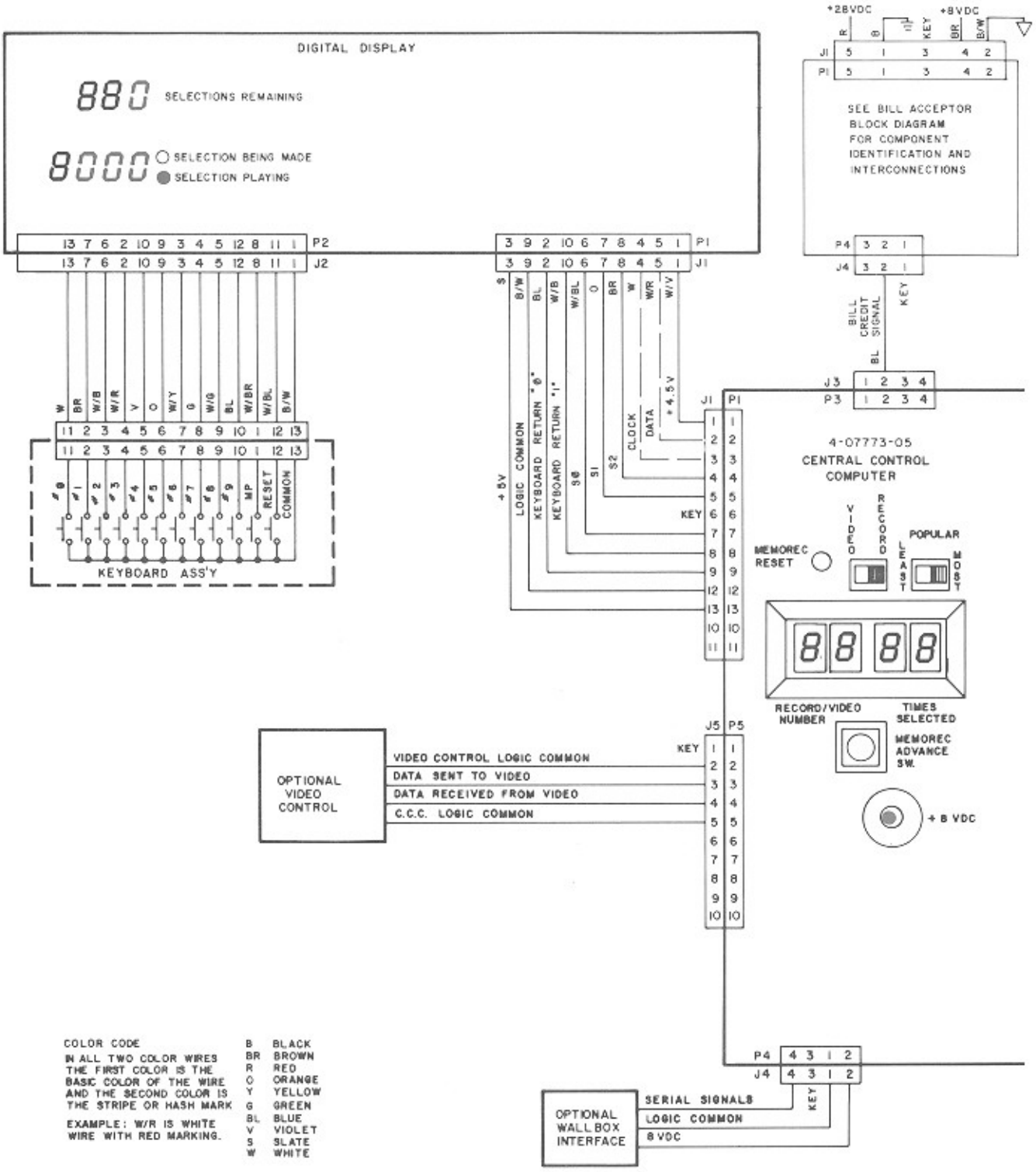

1. The C.C.C. begins to constantly monitor the state of all switches and determines if the transfer arm (Gripper Bow) is in home position.

2. C.C.C. sends Clock and Data Signals to Digital Display, causing the LED's to light.

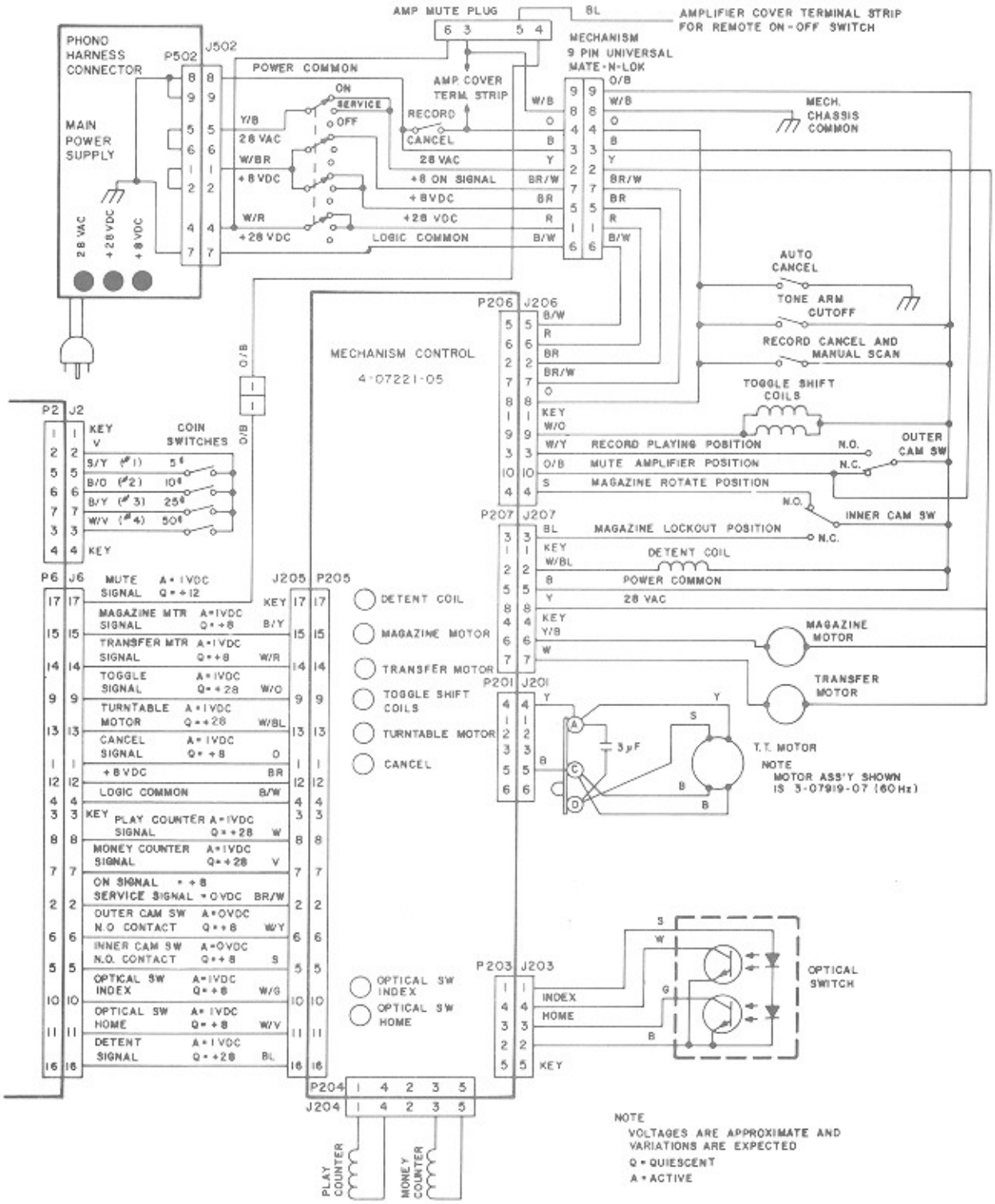
AMP MUTE PLUG
6 3 5 4
BL
AMPLIFIER COVER TERMINAL STRIP FOR REMOTE ON-OFF SWITCH
PHONO HARNESS CONNECTOR
P502
J502
MAIN POWER SUPPLY
28 VAC
+28 VDC
+8 VDC
POWER COMMON
ON
SERVICE
OFF
RECORD
CANCEL
AMP COVER TERM. STRIP
Y/B
28 VAC
W/BR
+8 VDC
W/R
+28 VDC
+8 ON SIGNAL
+8 VDC
+28 VDC
LOGIC COMMON
MECHANISM 9 PIN UNIVERSAL MATE-N-LOK
O/B
W/B
O
B
Y
BR/W
BR
R
B/W
MECH. CHASSIS COMMON
AUTO CANCEL
TONE ARM CUTOFF
RECORD CANCEL AND MANUAL SCAN
TOGGLE SHIFT COILS
KEY
W/O
W/Y
RECORD PLAYING POSITION
O/B
MUTE AMPLIFIER POSITION
S
MAGAZINE ROTATE POSITION
N.O.
N.C.
OUTER CAM SW
INNER CAM SW
P206
J206
P207
J207
BL
MAGAZINE LOCKOUT POSITION
W/BL
DETENT COIL
POWER COMMON
MAGAZINE MOTOR
TRANSFER MOTOR
MECHANISM CONTROL
4-07221-05
P2
J2
COIN SWITCHES
S/Y (#1) 5¢
B/O (#2) 10¢
B/Y (#3) 25¢
W/V (#4) 50¢
P6
J6
J205
P205
MUTE SIGNAL A=1VDC Q=+12
MAGAZINE MTR SIGNAL A=1VDC Q=+8
TRANSFER MTR SIGNAL A=1VDC Q=+8
TOGGLE SIGNAL A=1VDC Q=+28
TURNTABLE MOTOR A=1VDC Q=+28
CANCEL SIGNAL A=1VDC Q=+8
+8VDC
LOGIC COMMON
PLAY COUNTER SIGNAL A=1VDC Q=+28
MONEY COUNTER SIGNAL A=1VDC Q=+28
ON SIGNAL = +8
SERVICE SIGNAL = 0VDC
OUTER CAM SW N.O. CONTACT A=0VDC Q=+8
INNER CAM SW N.O. CONTACT A=0VDC Q=+8
OPTICAL SW INDEX A=1VDC Q=+8
OPTICAL SW HOME A=1VDC Q=+8
DETENT SIGNAL A=1VDC Q=+28
DETENT COIL
MAGAZINE MOTOR
TRANSFER MOTOR
TOGGLE SHIFT COILS
TURNTABLE MOTOR
CANCEL
OPTICAL SW INDEX
OPTICAL SW HOME
P201
J201
3μF
T.T. MOTOR
NOTE
MOTOR ASS'Y SHOWN IS 3-07919-07 (60Hz)
P203
J203
INDEX
HOME
OPTICAL SWITCH
P204
J204
PLAY COUNTER
MONEY COUNTER
NOTE
VOLTAGES ARE APPROXIMATE AND VARIATIONS ARE EXPECTED
Q = QUIESCENT
A = ACTIVE

SEQUENCE DIAGRAM 3

Patron inserts a quarter. Standard credit is established. (Credit is set at 1 play for 25 ¢, 2 for 50 ¢ and 5 for $1.00.)

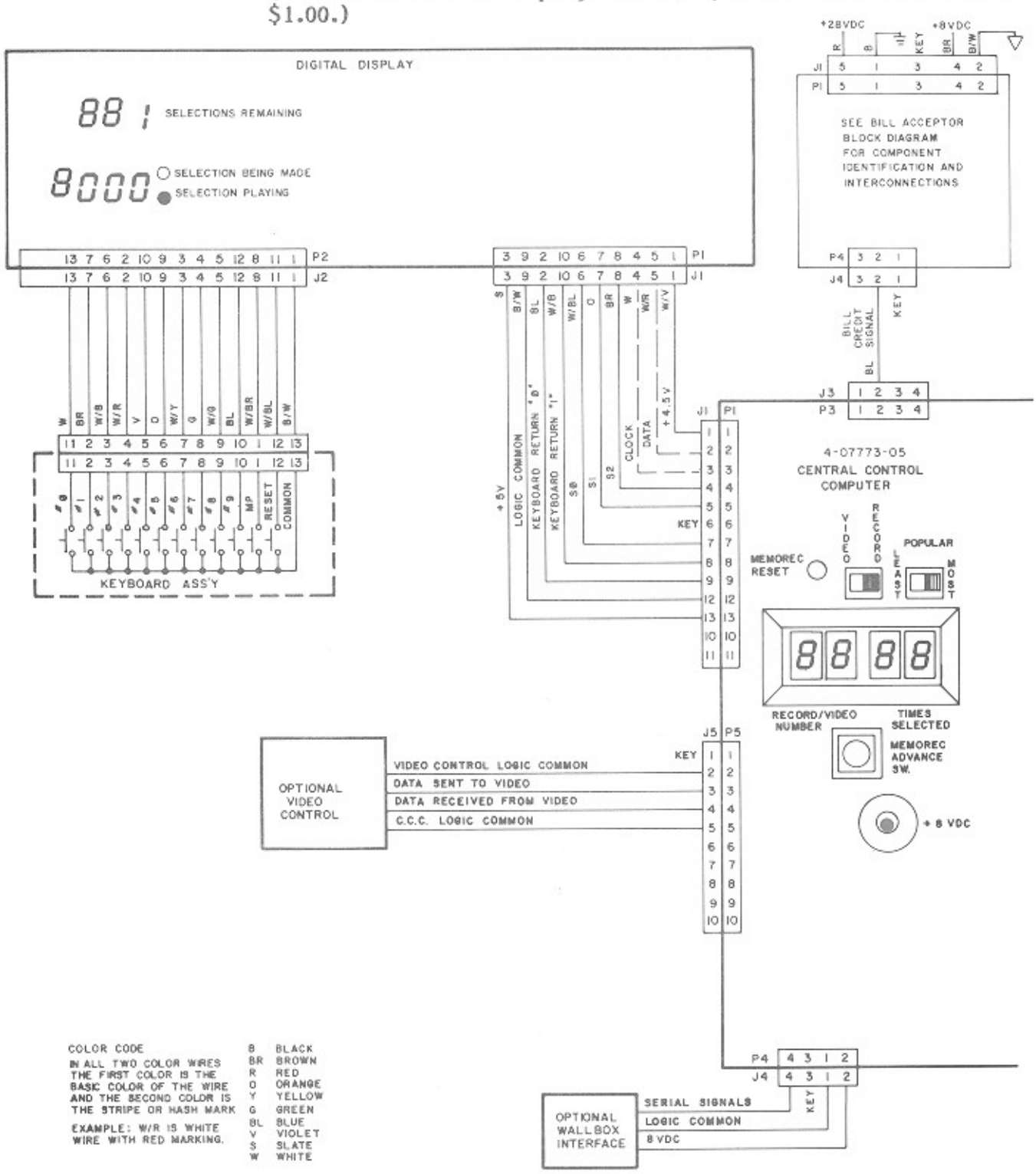

1. Patron inserts quarter into slot. The coin passes through the validator and actuates the 25¢ Switch.

2. The C.C.C. senses the switch closure and stores 5 money units (nickels) in its memory.

3. Five pulses are sent to the Money Counter.

4. The C.C.C. uses the amount of money stored in its memory and the stored pricing information to calculate the remaining credit equal to 1.

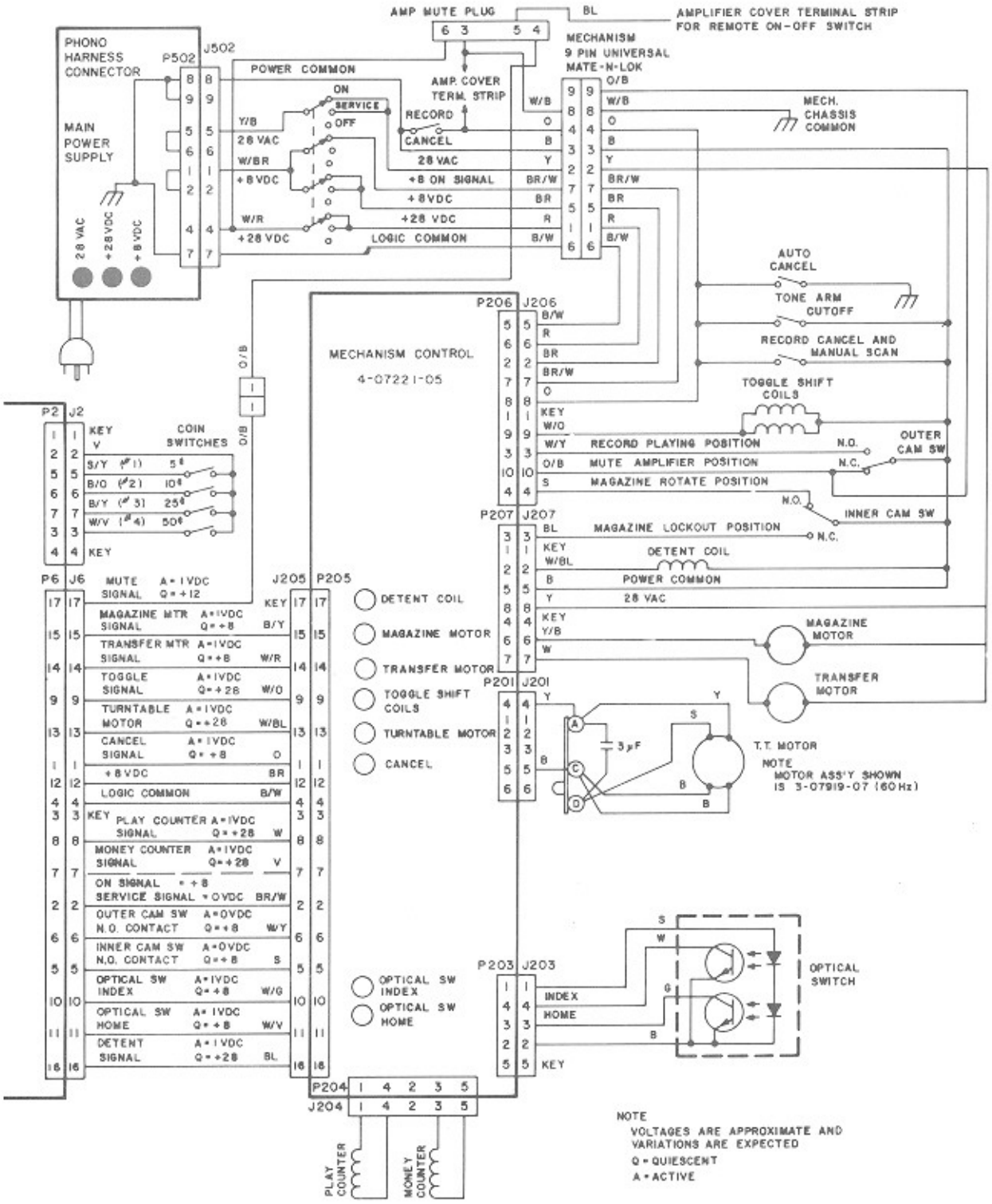

5. The Selection Remaining Display shows 1 credit.

NOTE: If a bill is inserted instead of a coin, the Bill Acceptor sends out pulses for the denomination inserted. One pulse is sent for $1 and 5 pulses are sent for $5. These pulses are present at C.C.C. (Pin 2 of P3).

SEQUENCE DIAGRAM 4 The first digit is selected and displayed.

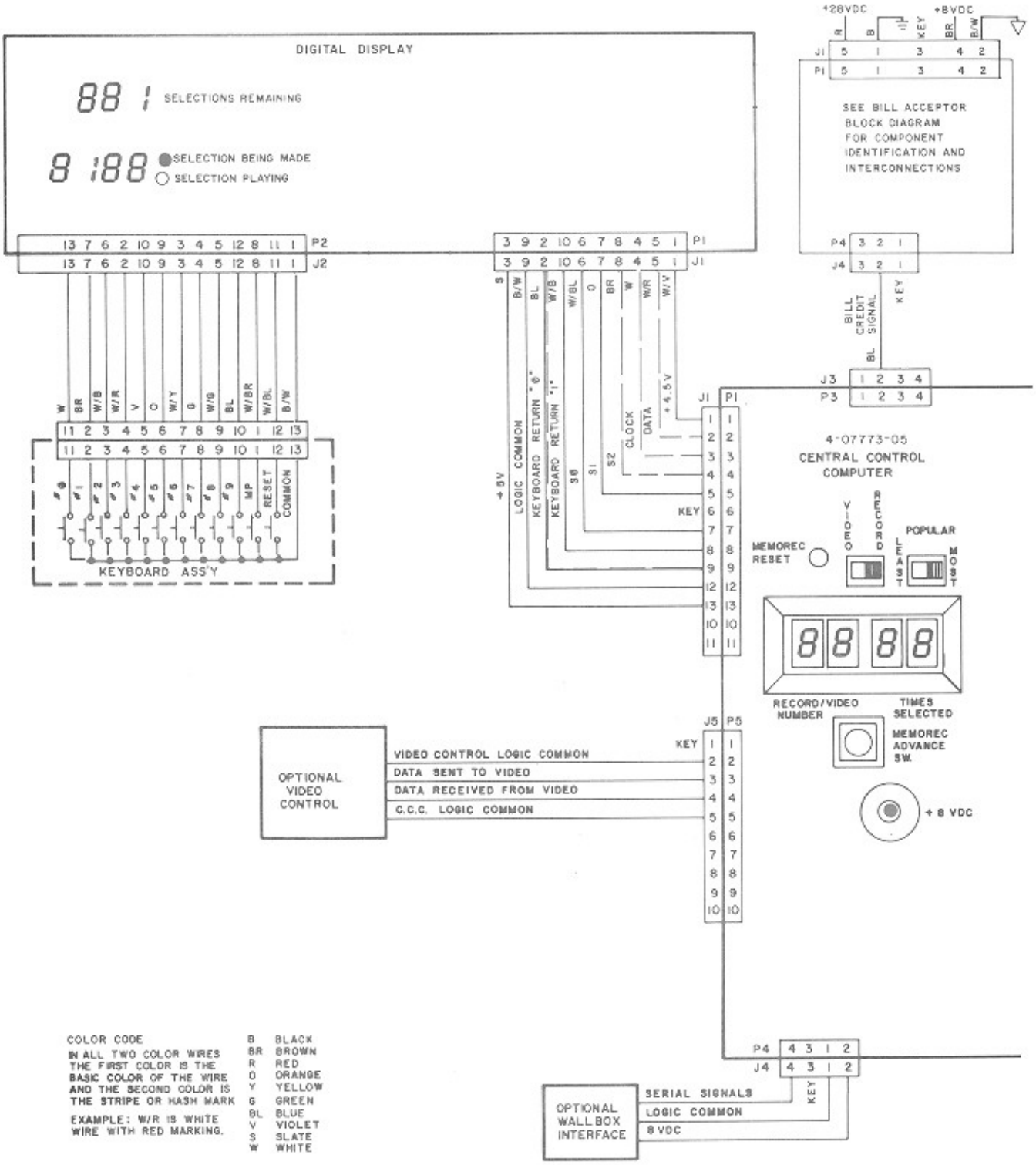

1. Patron presses the first digit of his selection number. (In this illustration the number is 1.)

2. The C.C.C. senses the key closure, checks that the credit is available and displays it on the digital display.

NOTE: The first digit of a selection must be a 1 or a 2. If any other key is pressed, the computer ignores it. A correct number may be entered. (RESET button is not needed.)

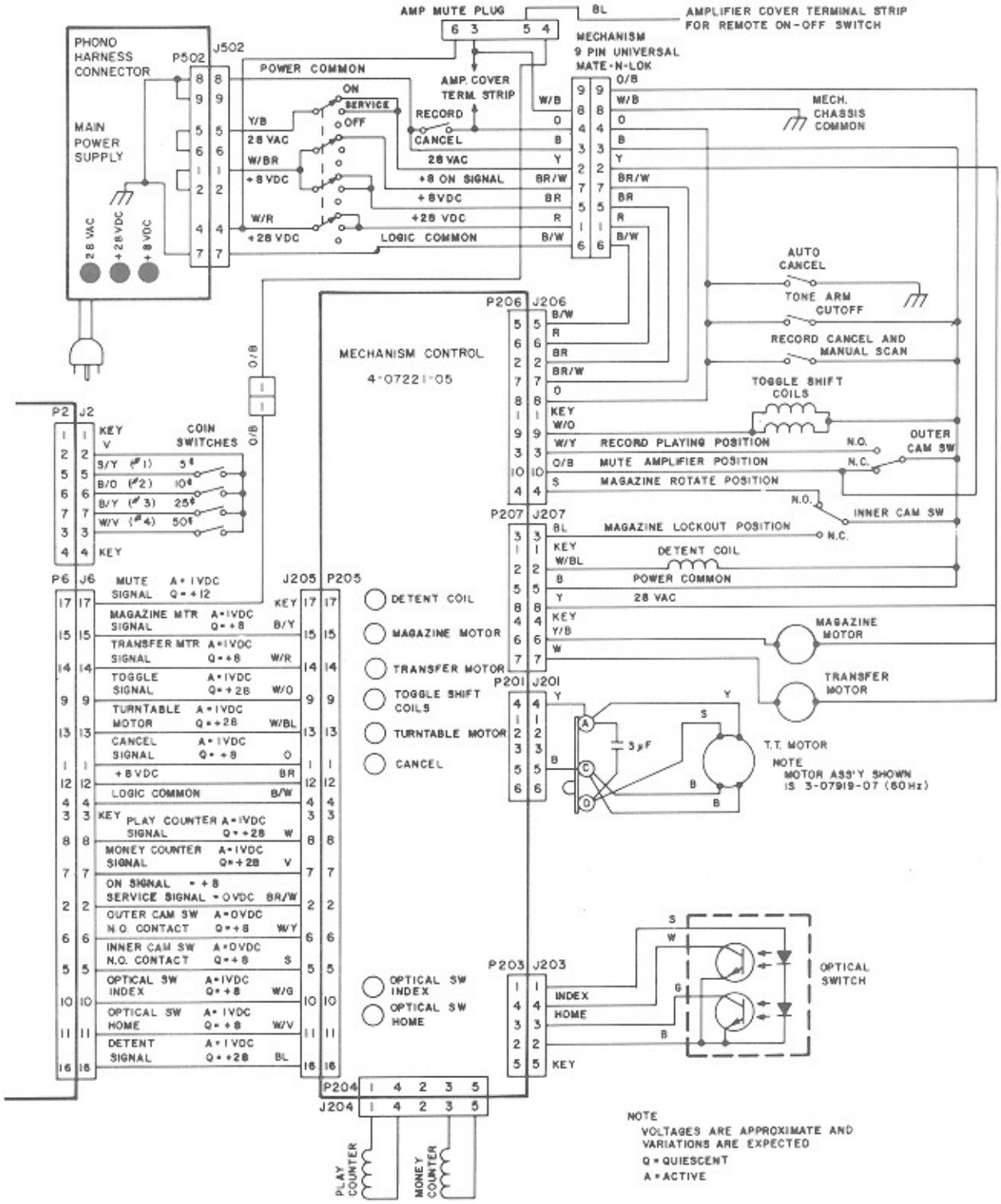
AMP MUTE PLUG
BL
AMPLIFIER COVER TERMINAL STRIP FOR REMOTE ON-OFF SWITCH
PHONO HARNESS CONNECTOR
P502
J502
MAIN POWER SUPPLY
28 VAC
+28 VDC
+8 VDC
POWER COMMON
ON
SERVICE
OFF
RECORD
CANCEL
AMP. COVER TERM. STRIP
MECHANISM 9 PIN UNIVERSAL MATE-N-LOK
MECH. CHASSIS COMMON
+8 ON SIGNAL
LOGIC COMMON
AUTO CANCEL
TONE ARM CUTOFF
RECORD CANCEL AND MANUAL SCAN
TOGGLE SHIFT COILS
RECORD PLAYING POSITION
MUTE AMPLIFIER POSITION
MAGAZINE ROTATE POSITION
OUTER CAM SW
INNER CAM SW
MAGAZINE LOCKOUT POSITION
DETENT COIL
MAGAZINE MOTOR
TRANSFER MOTOR
T.T. MOTOR
NOTE
MOTOR ASS'Y SHOWN IS 3-07919-07 (50 Hz)
OPTICAL SWITCH
MECHANISM CONTROL
4-07221-05
P206
J206
P207
J207
P201
J201
P203
J203
P204
J204
PLAY COUNTER
MONEY COUNTER
P2
J2
COIN SWITCHES
P6
J6
J205
P205
MUTE SIGNAL A=1VDC Q=+12
MAGAZINE MTR SIGNAL A=1VDC Q=+8
TRANSFER MTR SIGNAL A=1VDC Q=+8
TOGGLE SIGNAL A=1VDC Q=+28
TURNTABLE MOTOR A=1VDC Q=+28
CANCEL SIGNAL A=1VDC Q=+8
+8VDC
LOGIC COMMON
PLAY COUNTER SIGNAL A=1VDC Q=+28
MONEY COUNTER SIGNAL A=1VDC Q=+28
ON SIGNAL = +8
SERVICE SIGNAL = 0VDC
OUTER CAM SW N.O. CONTACT A=0VDC Q=+8
INNER CAM SW N.O. CONTACT A=0VDC Q=+8
OPTICAL SW INDEX A=1VDC Q=+8
OPTICAL SW HOME A=1VDC Q=+8
DETENT SIGNAL A=1VDC Q=+28
NOTE
VOLTAGES ARE APPROXIMATE AND VARIATIONS ARE EXPECTED
Q = QUIESCENT
A = ACTIVE

SEQUENCE DIAGRAM 5 The second digit is selected and displayed.

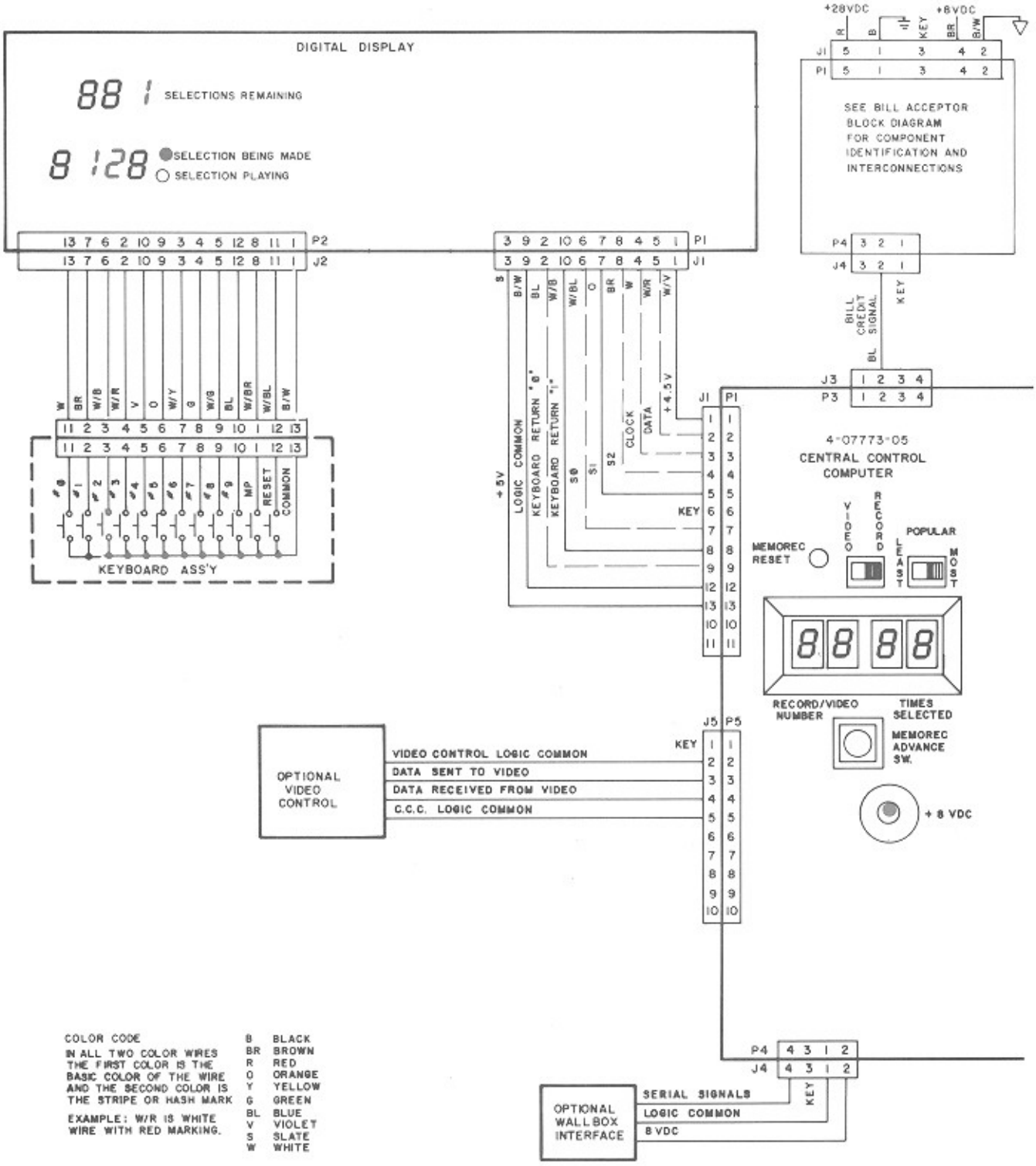

1. Patron presses the second digit of his selection. (In our illustration the number is 2.)

2. The C.C.C. senses the key closure, stores the selected digit and displays it.

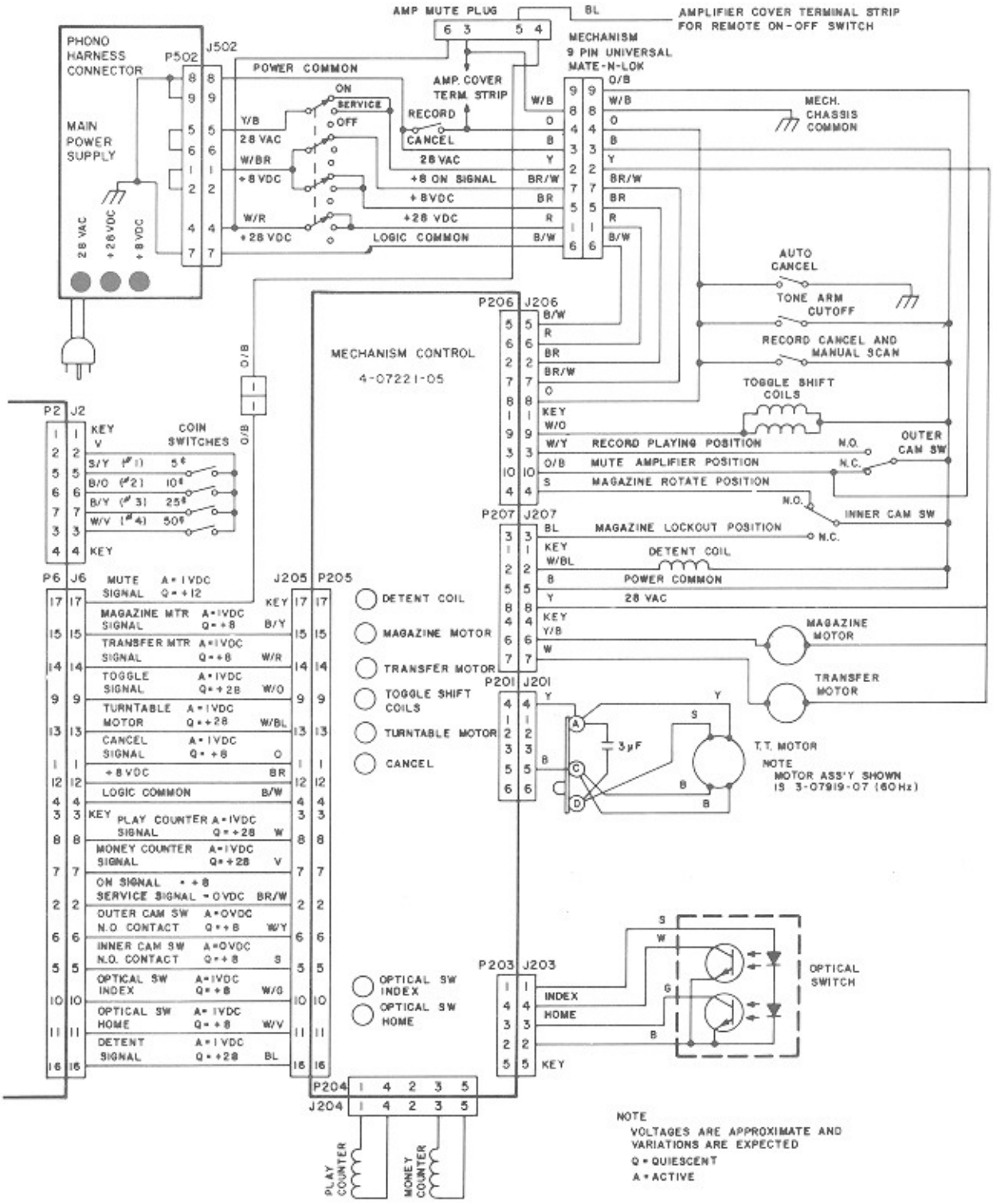
AMP MUTE PLUG
BL
AMPLIFIER COVER TERMINAL STRIP FOR REMOTE ON-OFF SWITCH
PHONO HARNESS CONNECTOR
P502
J502
MAIN POWER SUPPLY
28 VAC
+28 VDC
+8 VDC
POWER COMMON
ON
SERVICE
OFF
RECORD
CANCEL
AMP. COVER TERM. STRIP
MECHANISM 9 PIN UNIVERSAL MATE-N-LOK
MECH. CHASSIS COMMON
+8 ON SIGNAL
LOGIC COMMON
AUTO CANCEL
TONE ARM CUTOFF
RECORD CANCEL AND MANUAL SCAN
TOGGLE SHIFT COILS
RECORD PLAYING POSITION
MUTE AMPLIFIER POSITION
MAGAZINE ROTATE POSITION
MAGAZINE LOCKOUT POSITION
OUTER CAM SW
INNER CAM SW
N.O.
N.C.
MECHANISM CONTROL
4-07221-05
P206
J206
P207
J207
DETENT COIL
POWER COMMON
P2
J2
KEY
COIN SWITCHES
5¢
10¢
25¢
50¢
P6
J6
MUTE SIGNAL
MAGAZINE MTR SIGNAL
TRANSFER MTR SIGNAL
TOGGLE SIGNAL
TURNTABLE MOTOR
CANCEL SIGNAL
PLAY COUNTER SIGNAL
MONEY COUNTER SIGNAL
ON SIGNAL
SERVICE SIGNAL
OUTER CAM SW N.O. CONTACT
INNER CAM SW N.O. CONTACT
OPTICAL SW INDEX
OPTICAL SW HOME
DETENT SIGNAL
J205
P205
DETENT COIL
MAGAZINE MOTOR
TRANSFER MOTOR
TOGGLE SHIFT COILS
TURNTABLE MOTOR
CANCEL
OPTICAL SW INDEX
OPTICAL SW HOME
P201
J201
3μF
T.T. MOTOR
NOTE
MOTOR ASS'Y SHOWN IS 3-07919-07 (60Hz)
P203
J203
INDEX
HOME
OPTICAL SWITCH
P204
J204
PLAY COUNTER
MONEY COUNTER
NOTE
VOLTAGES ARE APPROXIMATE AND VARIATIONS ARE EXPECTED
Q = QUIESCENT
A = ACTIVE

SEQUENCE DIAGRAM 6

The third digit is selected and displayed. The selection is stored and Memorec is incremented. Credit is cancelled.

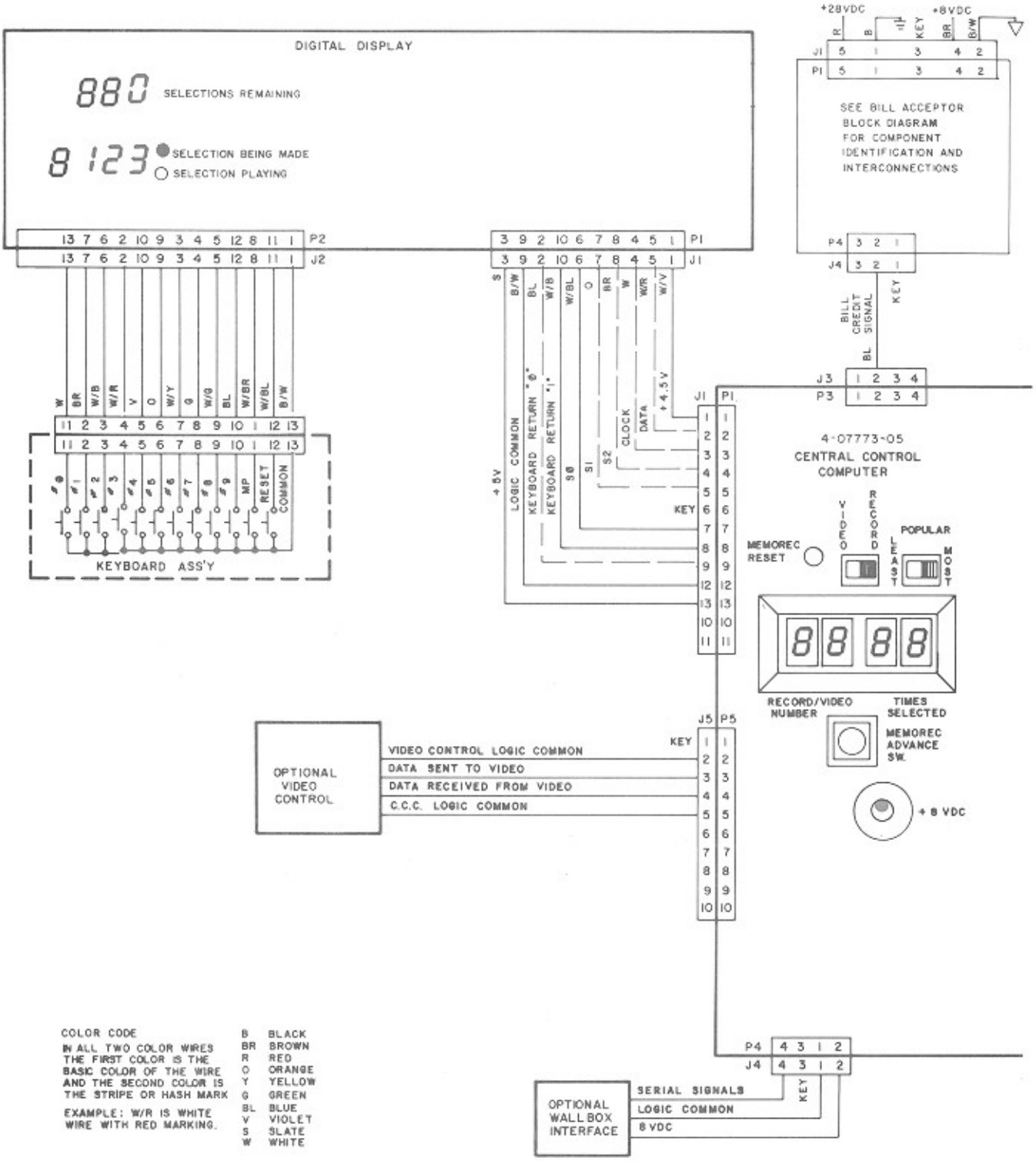

1. Patron presses the third digit of his selection. (In our illustration the number is 3.)

2. The C.C.C. senses the key closure, stores the selected digit and displays it.

3. Selection is stored in C.C.C.

4. Memorec data is incremented.

5. Credit is cancelled to 0.

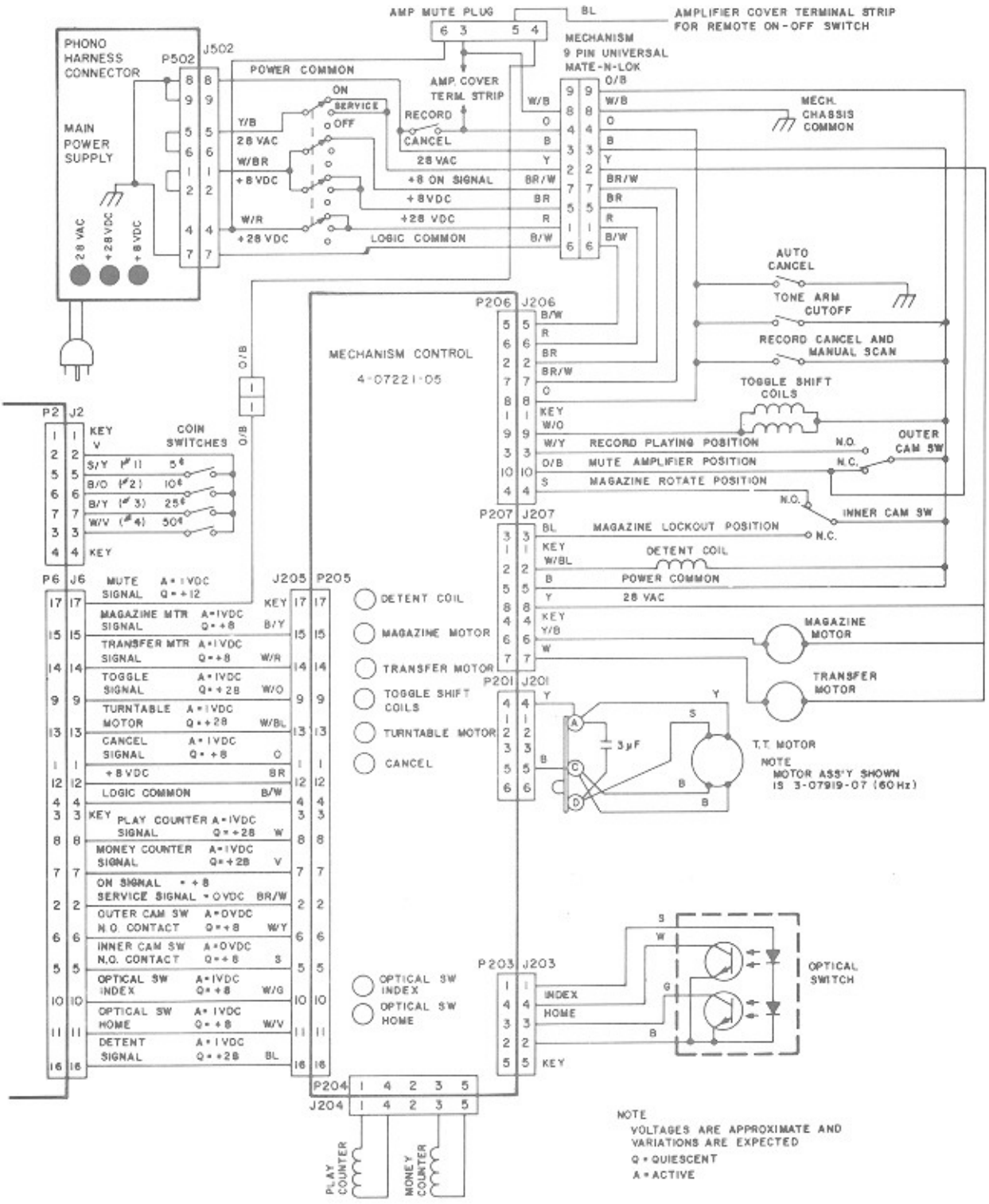
AMP MUTE PLUG
BL
AMPLIFIER COVER TERMINAL STRIP FOR REMOTE ON-OFF SWITCH
PHONO HARNESS CONNECTOR
P502
J502
MAIN POWER SUPPLY
28 VAC
+28 VDC
+8 VDC
POWER COMMON
ON
SERVICE
OFF
RECORD
CANCEL
AMP. COVER TERM. STRIP
MECHANISM 9 PIN UNIVERSAL MATE-N-LOK
MECH. CHASSIS COMMON
+8 ON SIGNAL
LOGIC COMMON
AUTO CANCEL
TONE ARM CUTOFF
RECORD CANCEL AND MANUAL SCAN
TOGGLE SHIFT COILS
RECORD PLAYING POSITION
MUTE AMPLIFIER POSITION
MAGAZINE ROTATE POSITION
OUTER CAM SW
INNER CAM SW
MAGAZINE LOCKOUT POSITION
DETENT COIL
MAGAZINE MOTOR
TRANSFER MOTOR
T.T. MOTOR
NOTE
MOTOR ASS'Y SHOWN IS 3-07919-07 (60 Hz)
OPTICAL SWITCH
MECHANISM CONTROL
4-07221-05
P2
J2
COIN SWITCHES
P6
J6
MUTE SIGNAL
MAGAZINE MTR SIGNAL
TRANSFER MTR SIGNAL
TOGGLE SIGNAL
TURNTABLE MOTOR
CANCEL SIGNAL
LOGIC COMMON
PLAY COUNTER SIGNAL
MONEY COUNTER SIGNAL
ON SIGNAL
SERVICE SIGNAL
OUTER CAM SW N.O. CONTACT
INNER CAM SW N.O. CONTACT
OPTICAL SW INDEX
OPTICAL SW HOME
DETENT SIGNAL
J205
P205
DETENT COIL
MAGAZINE MOTOR
TRANSFER MOTOR
TOGGLE SHIFT COILS
TURNTABLE MOTOR
CANCEL
OPTICAL SW INDEX
OPTICAL SW HOME
P204
J204
PLAY COUNTER
MONEY COUNTER
P206
J206
P207
J207
P201
J201
P203
J203
NOTE
VOLTAGES ARE APPROXIMATE AND VARIATIONS ARE EXPECTED
Q = QUIESCENT
A = ACTIVE

SEQUENCE DIAGRAM 7

Detent Coil and Magazine are energized and the Magazine rotates.

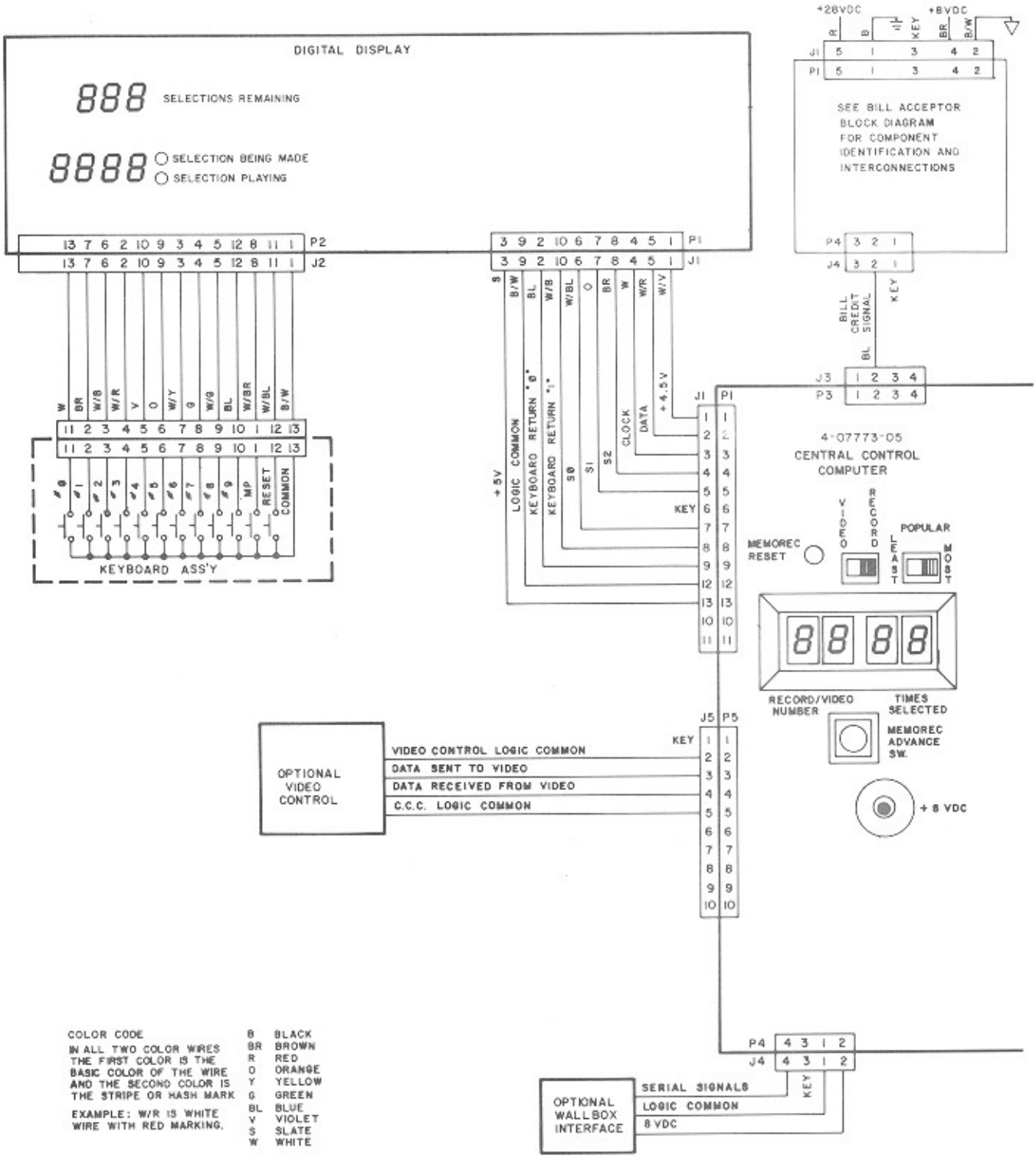

1. C.C.C. signals the Mechanism Control to energize the Detent Coil. Detent Coil LED lights and the energized Detent Coil operates a mechanical linkage to unlock the Magazine.

2. After 56 to 70 milliseconds, C.C.C. signals the Mechanism Control to energize the Magazine Motor. Magazine Motor LED lights and Motor is energized. The unlocked Magazine rotates.

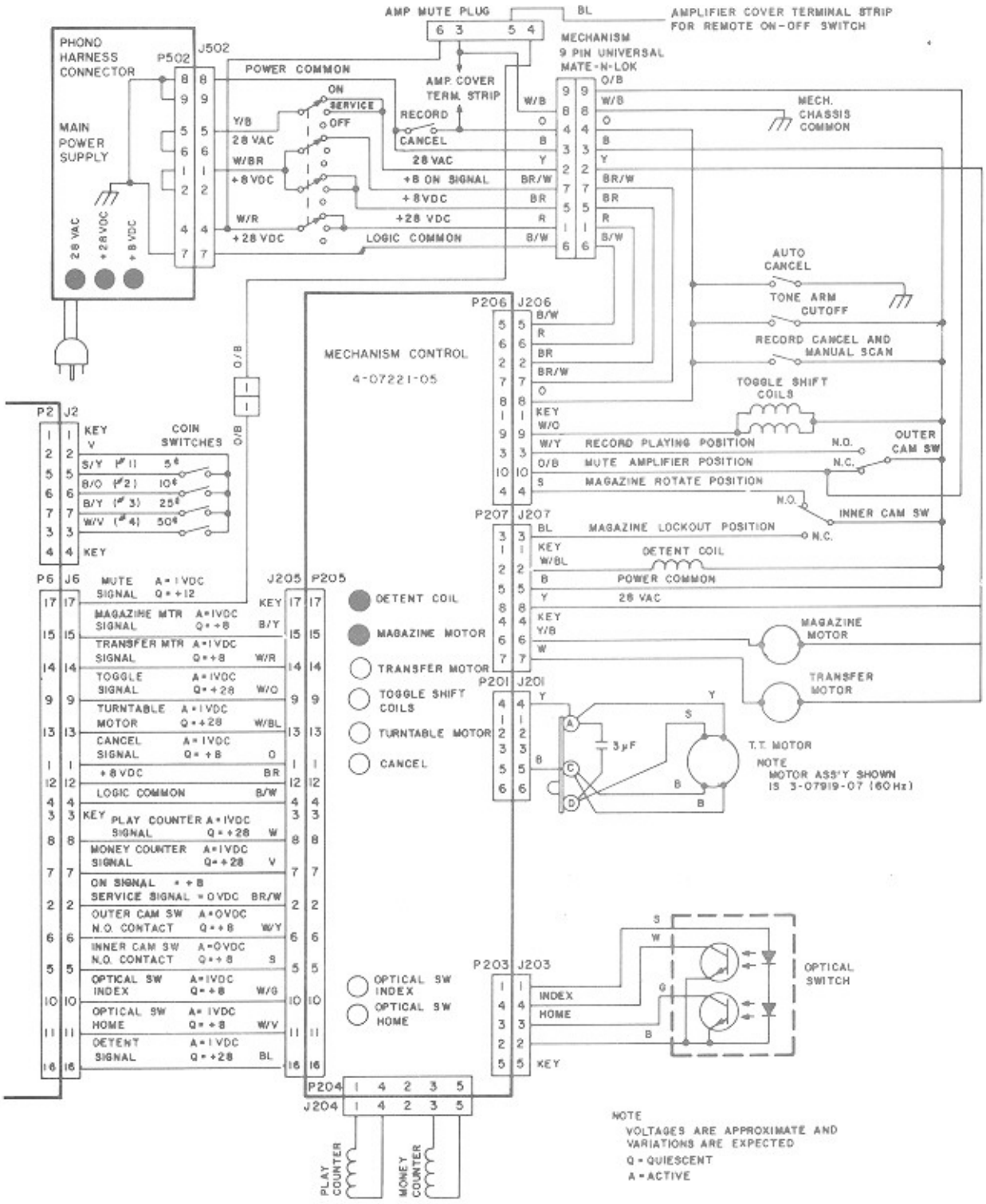
AMP MUTE PLUG
6 3 5 4
BL
AMPLIFIER COVER TERMINAL STRIP FOR REMOTE ON-OFF SWITCH
PHONO HARNESS CONNECTOR
P502
J502
MAIN POWER SUPPLY
28 VAC
+28 VDC
+8 VDC
POWER COMMON
Y/B
28 VAC
W/BR
+8 VDC
W/R
+28 VDC
ON
SERVICE
OFF
AMP COVER TERM. STRIP
RECORD
CANCEL
28 VAC
+8 ON SIGNAL
+8 VDC
+28 VDC
LOGIC COMMON
MECHANISM 9 PIN UNIVERSAL MATE-N-LOK
O/B
W/B
O
B
Y
BR/W
BR
R
B/W
MECH. CHASSIS COMMON
AUTO CANCEL
TONE ARM CUTOFF
RECORD CANCEL AND MANUAL SCAN
TOGGLE SHIFT COILS
MECHANISM CONTROL
4-07221-05
P206
J206
KEY
W/O
W/Y
RECORD PLAYING POSITION
O/B
MUTE AMPLIFIER POSITION
S
MAGAZINE ROTATE POSITION
N.O.
N.C.
OUTER CAM SW
INNER CAM SW
P207
J207
BL
MAGAZINE LOCKOUT POSITION
KEY
W/BL
DETENT COIL
B
POWER COMMON
Y
28 VAC
KEY
Y/B
W
MAGAZINE MOTOR
TRANSFER MOTOR
P2
J2
KEY
V
COIN SWITCHES
S/Y (#1) 5¢
B/O (#2) 10¢
B/Y (#3) 25¢
W/V (#4) 50¢
KEY
P6
J6
MUTE SIGNAL A=1VDC Q=+12
MAGAZINE MTR SIGNAL A=1VDC Q=+8 B/Y
TRANSFER MTR SIGNAL A=1VDC Q=+8 W/R
TOGGLE SIGNAL A=1VDC Q=+28 W/O
TURNTABLE MOTOR A=1VDC Q=+28 W/BL
CANCEL SIGNAL A=1VDC Q=+8 O
+8VDC BR
LOGIC COMMON B/W
KEY PLAY COUNTER SIGNAL A=1VDC Q=+28 W
MONEY COUNTER SIGNAL A=1VDC Q=+28 V
ON SIGNAL = +8
SERVICE SIGNAL = 0VDC BR/W
OUTER CAM SW N.O. CONTACT A=0VDC Q=+8 W/Y
INNER CAM SW N.O. CONTACT A=0VDC Q=+8 S
OPTICAL SW INDEX A=1VDC Q=+8 W/G
OPTICAL SW HOME A=1VDC Q=+8 W/V
DETENT SIGNAL A=1VDC Q=+28 BL
J205
P205
DETENT COIL
MAGAZINE MOTOR
TRANSFER MOTOR
TOGGLE SHIFT COILS
TURNTABLE MOTOR
CANCEL
OPTICAL SW INDEX
OPTICAL SW HOME
P201
J201
3μF
T.T. MOTOR
NOTE
MOTOR ASS'Y SHOWN IS 3-07919-07 (60Hz)
P203
J203
INDEX
HOME
KEY
OPTICAL SWITCH
P204
J204
PLAY COUNTER
MONEY COUNTER
NOTE
VOLTAGES ARE APPROXIMATE AND VARIATIONS ARE EXPECTED
Q = QUIESCENT
A = ACTIVE

SEQUENCE DIAGRAM 8 Magazine rotates until the selection is located.

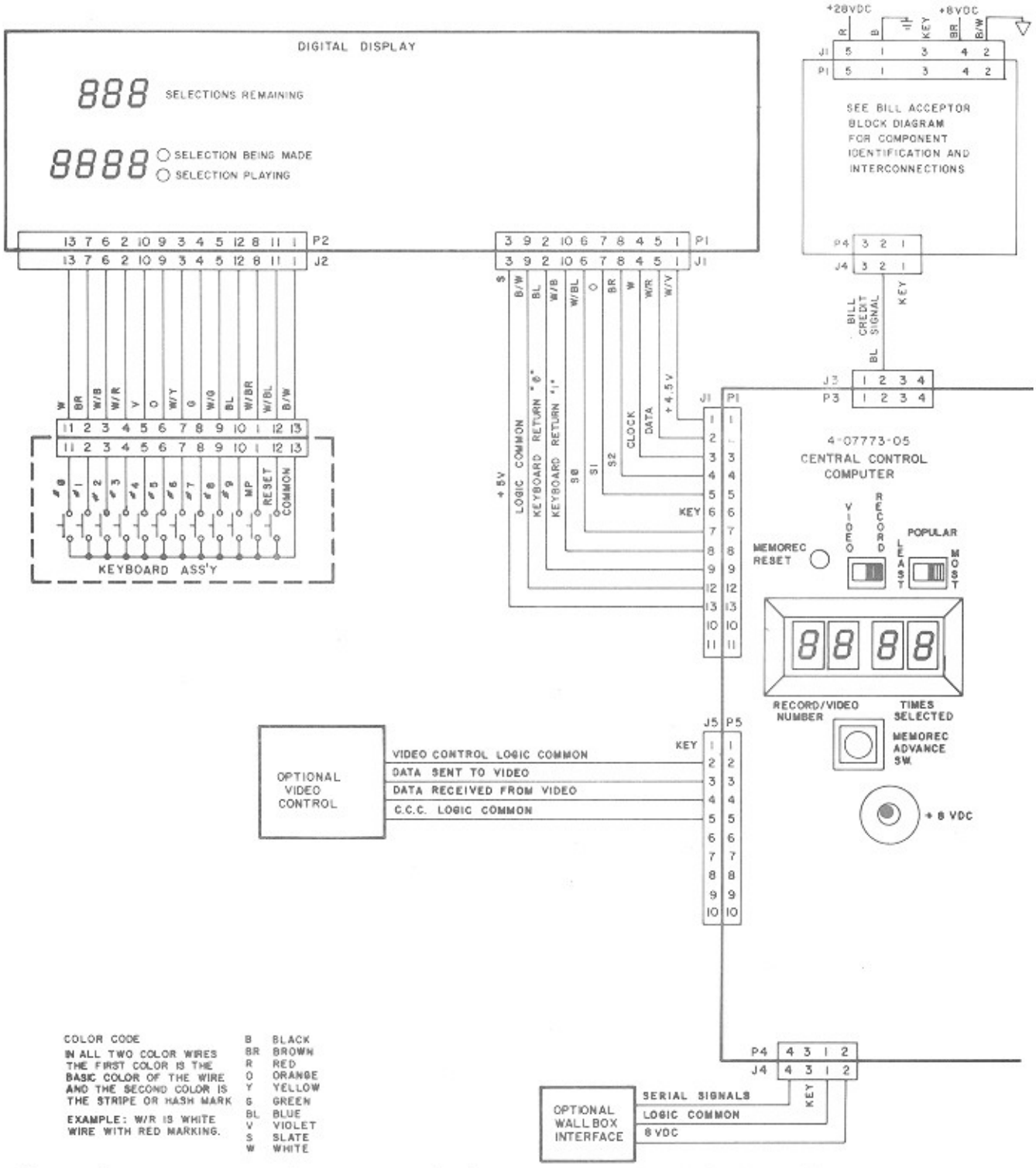

1. Magazine rotates and gear teeth interrupt Optical Switch light beam.

NOTE: When the Optical Switch Index LED goes from dark to light (Off to On) the C.C.C. understands that the Magazine is moving to the next record position. Two things happen:

a. C.C.C. keeps track of the Magazine position by adding 1 to the value stored in C.C.C.

b. C.C.C. checks the selection memory to see if the left or right side of the next record has been selected.

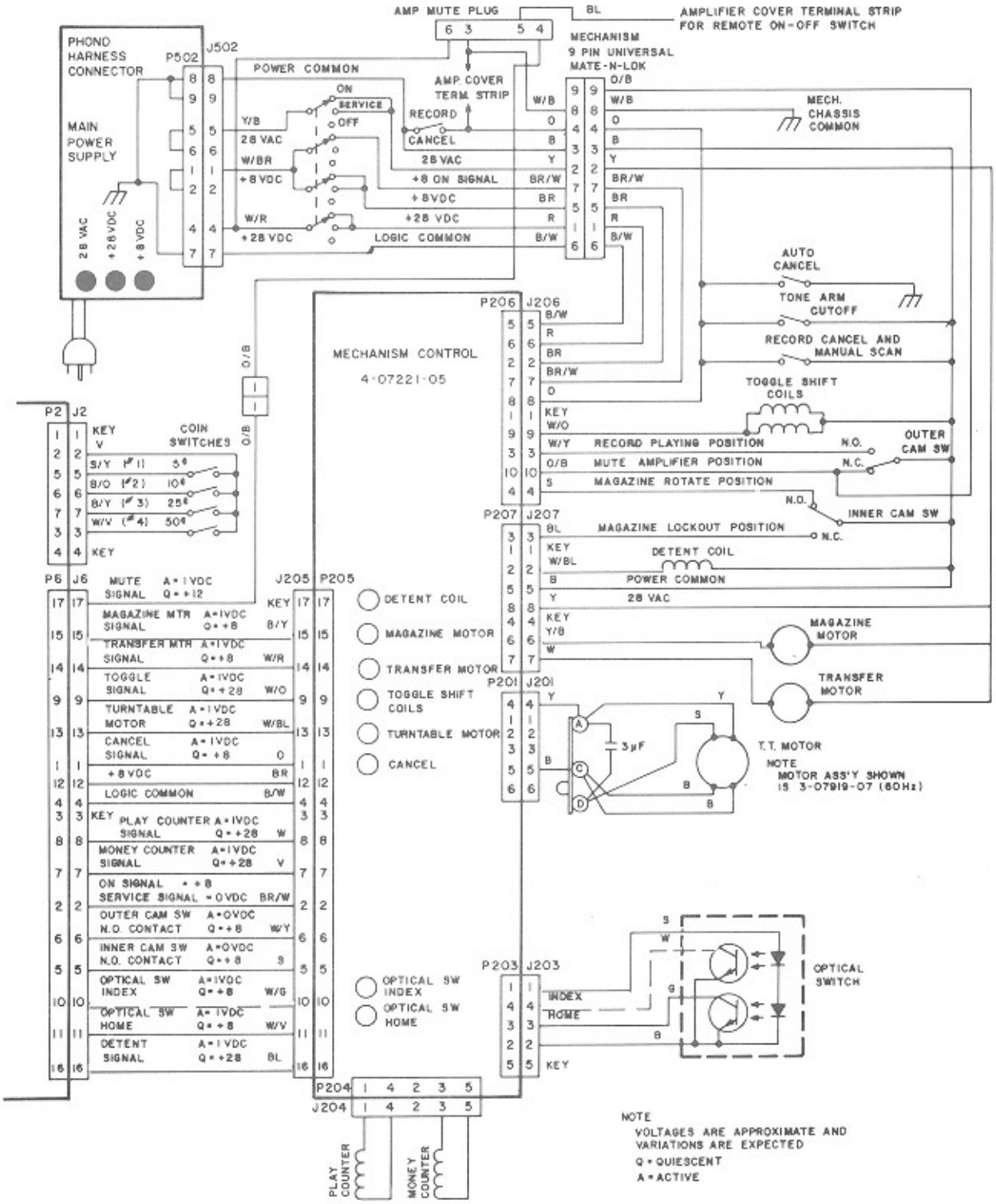

2. Selection Playing Display shows Magazine record position.

SEQUENCE DIAGRAM 9

Selection located, record transferred to Turntable, Tone Arm set down.

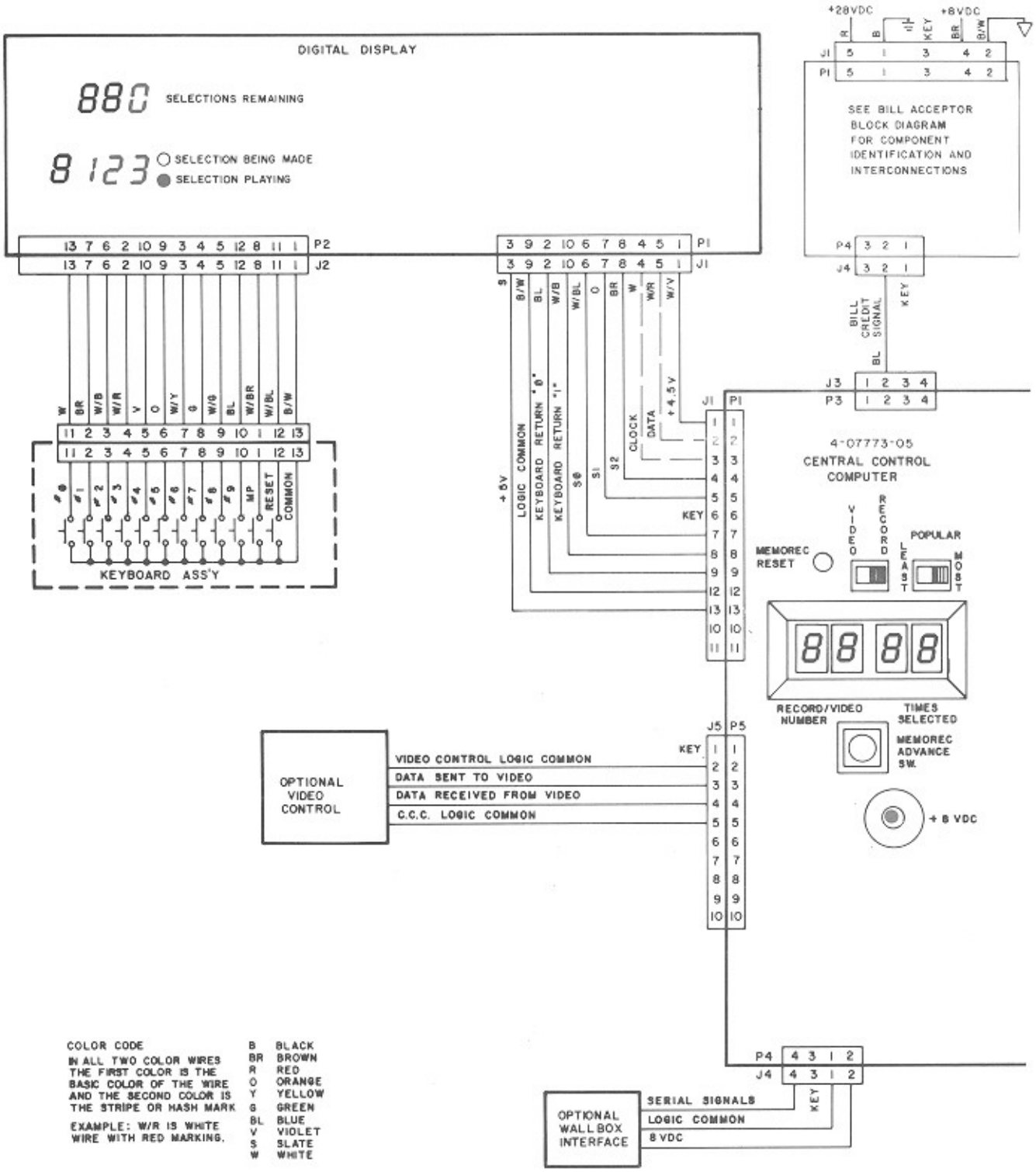

1. C.C.C. signals turn off Detent and Mag Motor LED's, causing Mechanism Control to de-energize Detent Coil and Magazine Motor.

2. Magazine is locked by Detent Pawl falling into slot in Detent Wheel.

3. C.C.C. signals to turn on Tran. Motor and T.T. Motor LED's - causing Mechanism Control to energize Transfer and Turntable Motors. C.C.C. signals Mechanism Control to advance Play Counter.

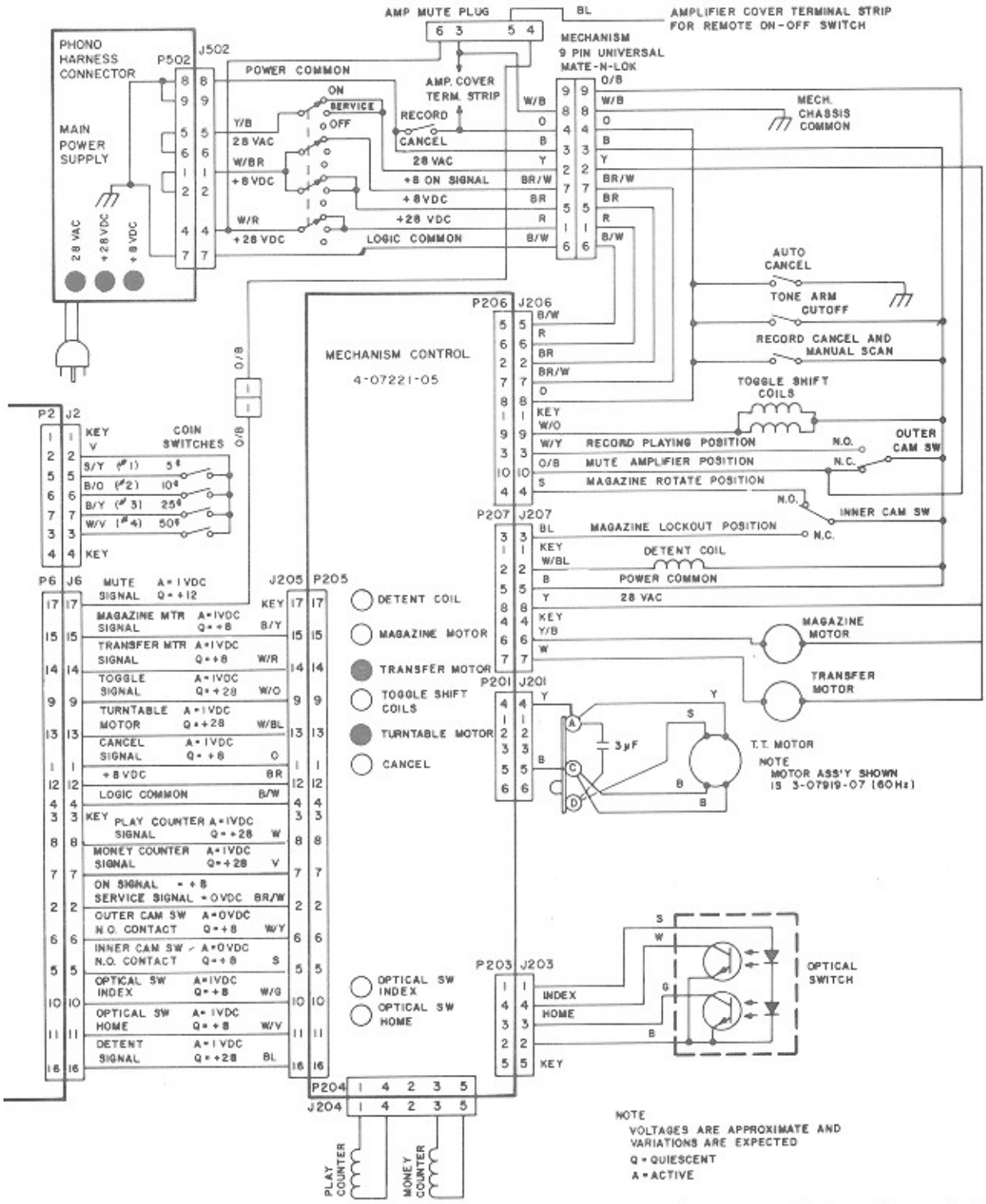

4. Transfer Motor rotates Cam off Inner Cam Switch. (NOTE: If the first digit of selection was a 2, the C.C.C. signal lights the Toggle LED, causing the Mechanism Control to energize Toggle Shift Controls.)

5. Gripper Bow picks up a record, places it on the Turntable and the Tone Arm sets down. (NOTE: If a record is not placed on the Turntable, the Auto Cancel operates when the Tone Arm sets down.)

6. Selection Playing Display lights - showing number of record chosen.

SEQUENCE DIAGRAM 10 Amplifier unmuted and record plays.

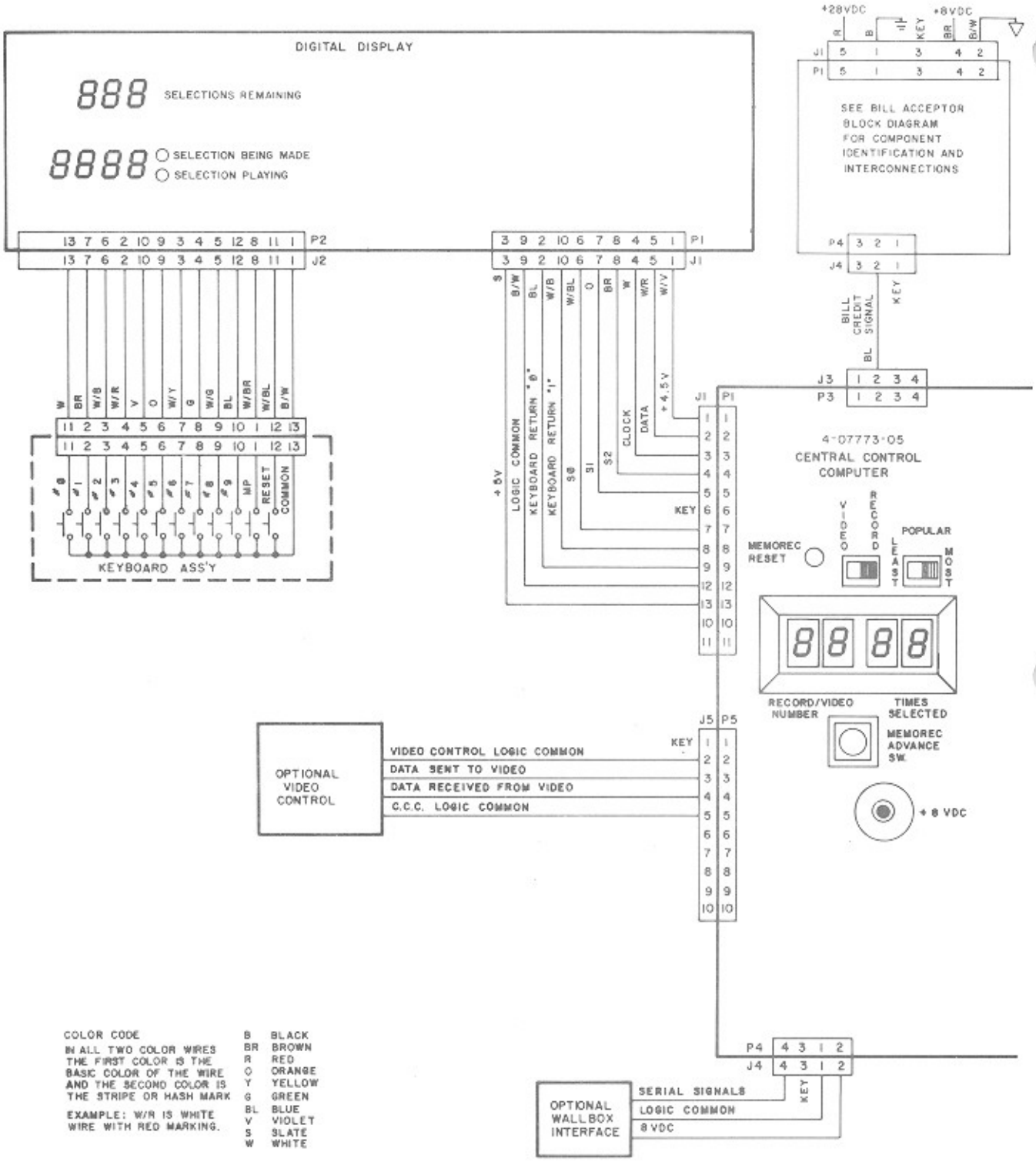

1. Transfer Motor rotates and Cam moves onto Outer Cam Switch.

2. Outer Cam SW. N.O Contact signals C.C.C. to turn off Transfer Motor. Tran. Motor LED turns off and Transfer Motor stops.

3. Mute signal becomes active and causes Amplifier to unmute.

4. Record plays.

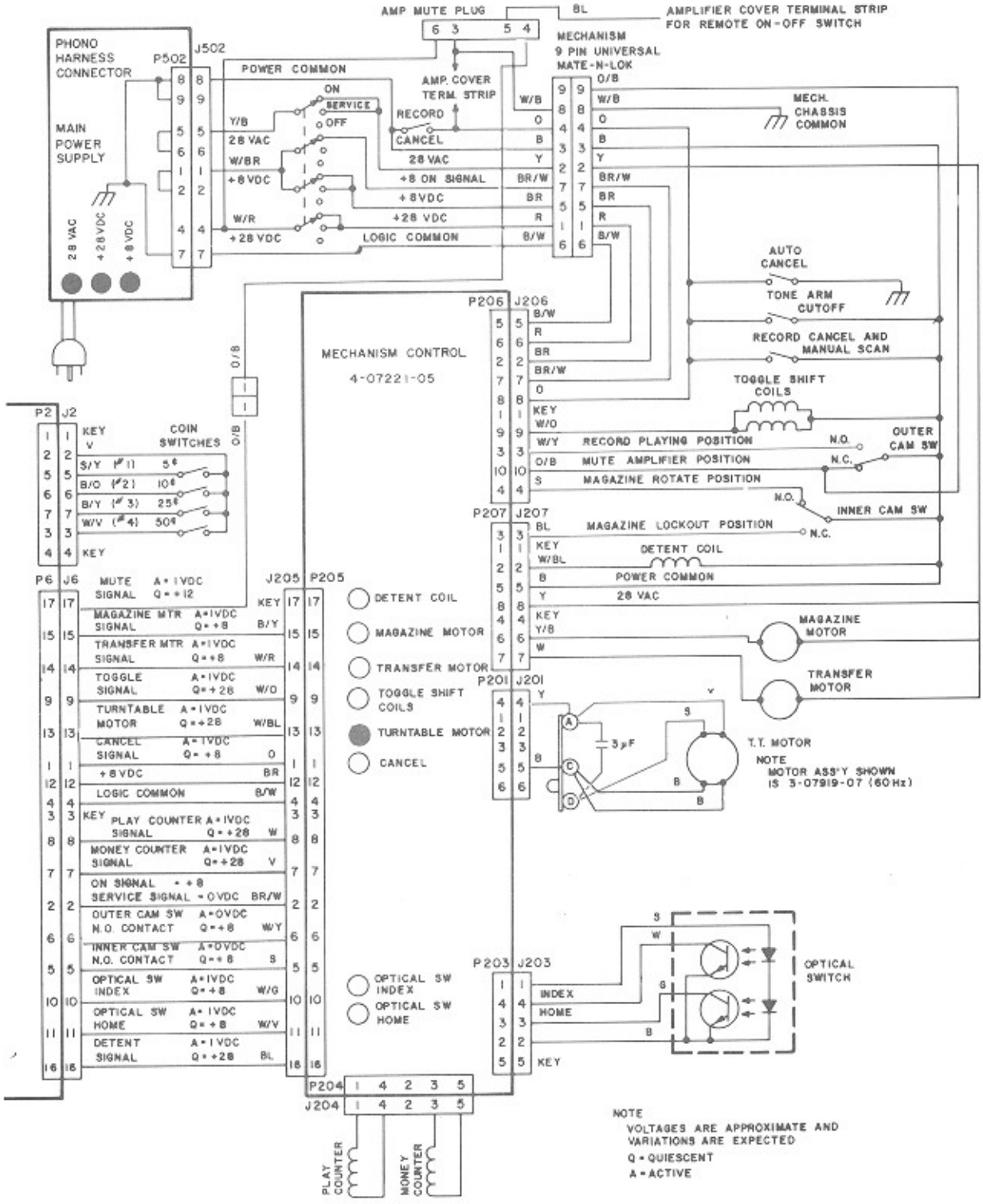
AMP MUTE PLUG
6 3 5 4
BL
AMPLIFIER COVER TERMINAL STRIP FOR REMOTE ON-OFF SWITCH
PHONO HARNESS CONNECTOR
P502
J502
MAIN POWER SUPPLY
28 VAC
+28 VDC
+8 VDC
POWER COMMON
ON
SERVICE
OFF
RECORD
CANCEL
AMP. COVER TERM. STRIP
Y/B
28 VAC
W/BR
+8 VDC
W/R
+28 VDC
+8 ON SIGNAL
+8 VDC
+28 VDC
LOGIC COMMON
MECHANISM 9 PIN UNIVERSAL MATE-N-LOK
MECH. CHASSIS COMMON
AUTO CANCEL
TONE ARM CUTOFF
RECORD CANCEL AND MANUAL SCAN
TOGGLE SHIFT COILS
RECORD PLAYING POSITION
MUTE AMPLIFIER POSITION
MAGAZINE ROTATE POSITION
OUTER CAM SW
INNER CAM SW
N.O.
N.C.
MAGAZINE LOCKOUT POSITION
DETENT COIL
POWER COMMON
28 VAC
MAGAZINE MOTOR
TRANSFER MOTOR
T.T. MOTOR
NOTE
MOTOR ASS'Y SHOWN IS 3-07919-07 (60Hz)
3μF
MECHANISM CONTROL
4-07221-05
P206
J206
P207
J207
P201
J201
P203
J203
P204
J204
P2
J2
KEY
COIN SWITCHES
S/Y (#1) 5¢
B/O (#2) 10¢
B/Y (#3) 25¢
W/V (#4) 50¢
P6
J6
J205
P205
MUTE SIGNAL A=1VDC Q=+12
MAGAZINE MTR SIGNAL A=1VDC Q=+8
TRANSFER MTR SIGNAL A=1VDC Q=+8
TOGGLE SIGNAL A=1VDC Q=+28
TURNTABLE MOTOR A=1VDC Q=+28
CANCEL SIGNAL A=1VDC Q=+8
+8VDC
LOGIC COMMON
PLAY COUNTER SIGNAL A=1VDC Q=+28
MONEY COUNTER SIGNAL A=1VDC Q=+28
ON SIGNAL =+8
SERVICE SIGNAL =0VDC
OUTER CAM SW N.O. CONTACT A=0VDC Q=+8
INNER CAM SW N.O. CONTACT A=0VDC Q=+8
OPTICAL SW INDEX A=1VDC Q=+8
OPTICAL SW HOME A=1VDC Q=+8
DETENT SIGNAL A=1VDC Q=+28
DETENT COIL
MAGAZINE MOTOR
TRANSFER MOTOR
TOGGLE SHIFT COILS
TURNTABLE MOTOR
CANCEL
OPTICAL SW INDEX
OPTICAL SW HOME
INDEX
HOME
OPTICAL SWITCH
PLAY COUNTER
MONEY COUNTER
NOTE
VOLTAGES ARE APPROXIMATE AND VARIATIONS ARE EXPECTED
Q = QUIESCENT
A = ACTIVE

SEQUENCE DIAGRAM 11 Record ends and is returned to Magazine.

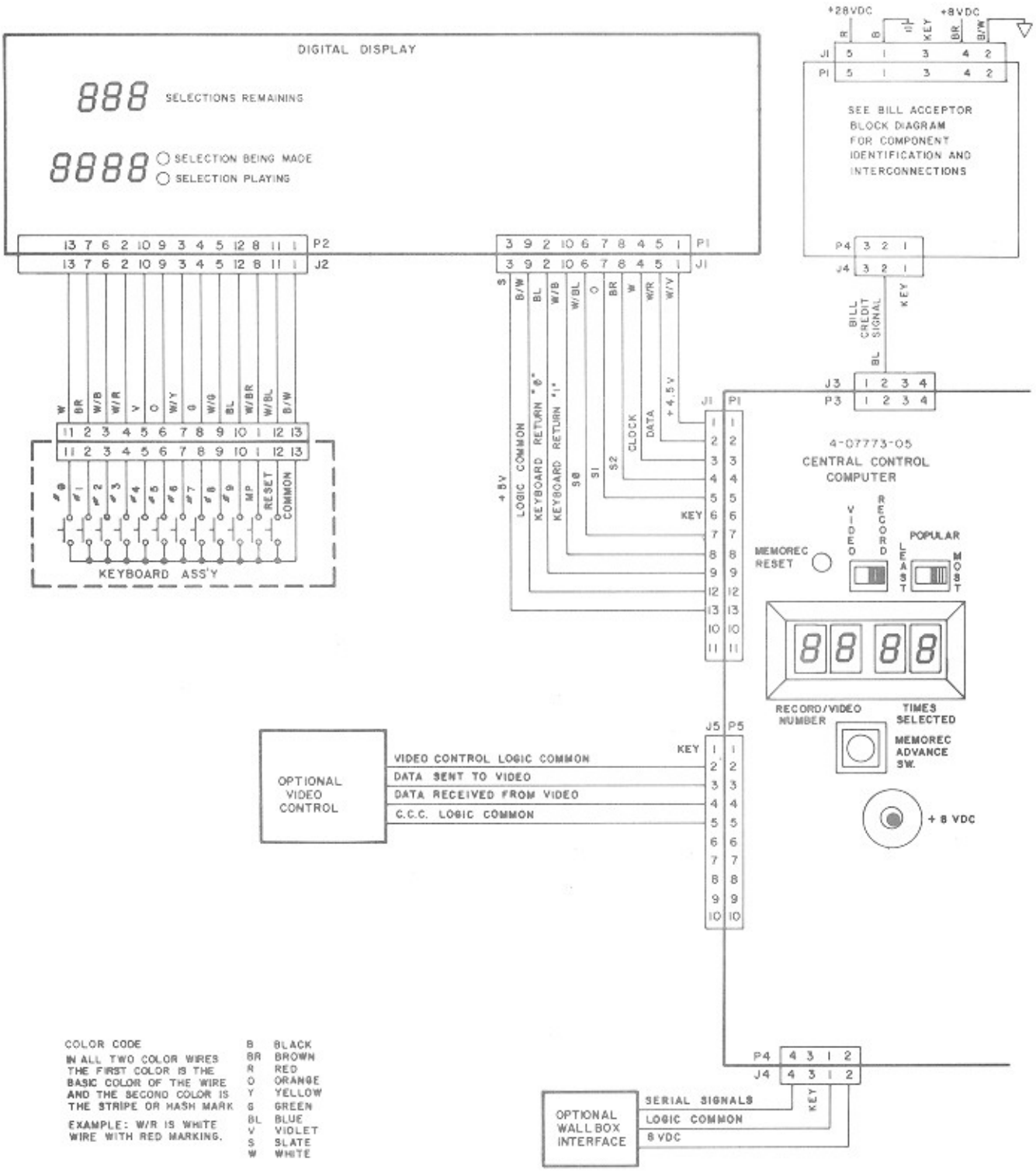

1. Tone Arm Cutoff sends a cancel signal to C.C.C.

2. C.C.C. turns on Tran. Motor LED causing Mechanism Control to energize Transfer Motor.

3. Gripper Bow picks up record and returns it to Magazine.

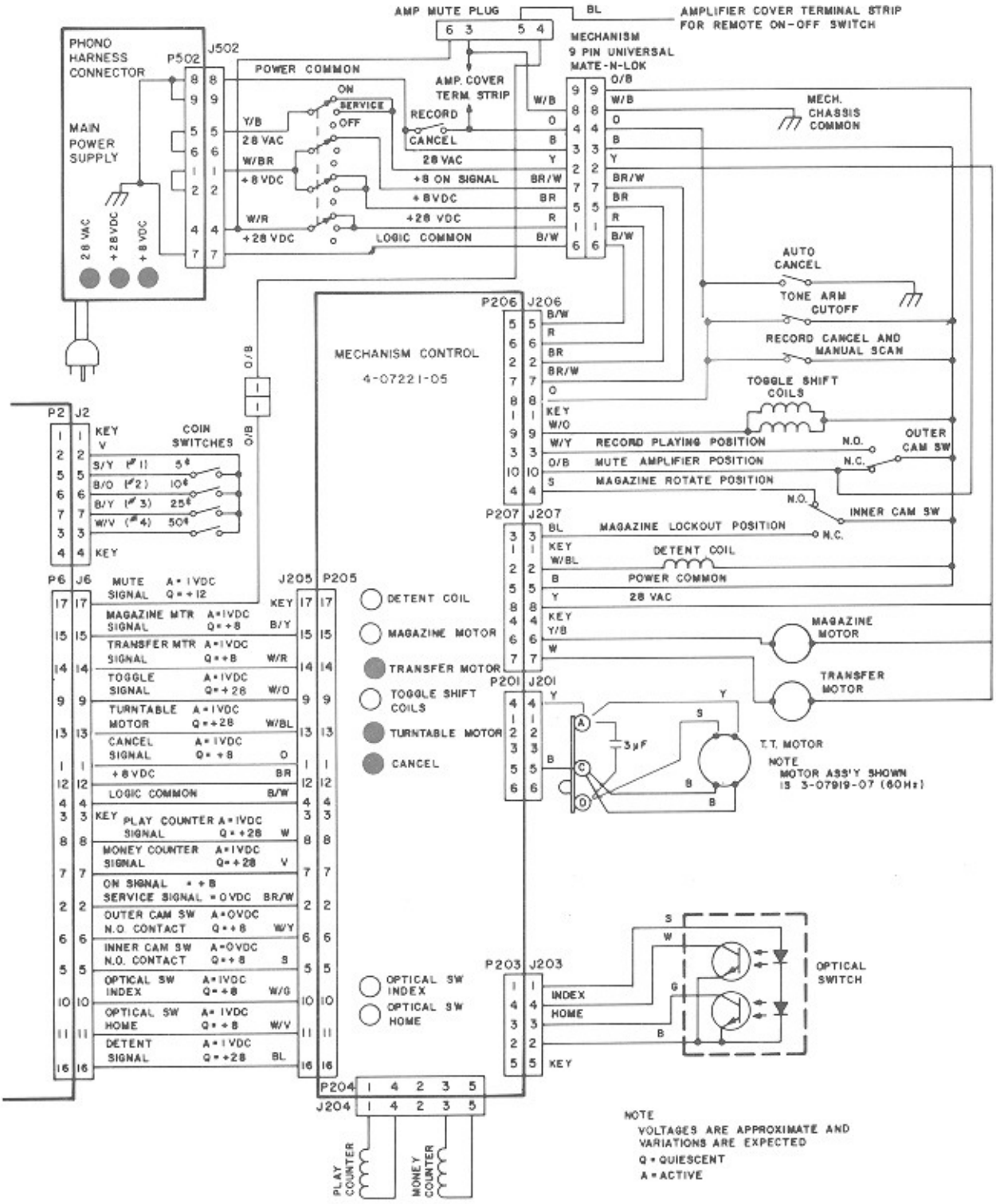
AMP MUTE PLUG
BL
AMPLIFIER COVER TERMINAL STRIP FOR REMOTE ON-OFF SWITCH
PHONO HARNESS CONNECTOR
P502
J502
POWER COMMON
MAIN POWER SUPPLY
28 VAC
+28 VDC
+8 VDC
AMP. COVER TERM. STRIP
MECHANISM 9 PIN UNIVERSAL MATE-N-LOK
ON
SERVICE
OFF
RECORD
CANCEL
+8 ON SIGNAL
+8VDC
+28 VDC
LOGIC COMMON
MECH. CHASSIS COMMON
AUTO CANCEL
TONE ARM CUTOFF
RECORD CANCEL AND MANUAL SCAN
TOGGLE SHIFT COILS
RECORD PLAYING POSITION
MUTE AMPLIFIER POSITION
MAGAZINE ROTATE POSITION
OUTER CAM SW
INNER CAM SW
MAGAZINE LOCKOUT POSITION
DETENT COIL
MAGAZINE MOTOR
TRANSFER MOTOR
T.T. MOTOR
NOTE
MOTOR ASS'Y SHOWN IS 3-07919-07 (60Hz)
MECHANISM CONTROL
4-07221-05
P206
J206
P207
J207
P201
J201
P203
J203
P2
J2
COIN SWITCHES
P6
J6
J205
P205
MUTE SIGNAL
MAGAZINE MTR SIGNAL
TRANSFER MTR SIGNAL
TOGGLE SIGNAL
TURNTABLE MOTOR
CANCEL SIGNAL
LOGIC COMMON
PLAY COUNTER SIGNAL
MONEY COUNTER SIGNAL
ON SIGNAL
SERVICE SIGNAL
OUTER CAM SW N.O. CONTACT
INNER CAM SW N.O. CONTACT
OPTICAL SW INDEX
OPTICAL SW HOME
DETENT SIGNAL
OPTICAL SWITCH
P204
J204
PLAY COUNTER
MONEY COUNTER
NOTE
VOLTAGES ARE APPROXIMATE AND VARIATIONS ARE EXPECTED
Q = QUIESCENT
A = ACTIVE

SEQUENCE DIAGRAM 12 Transfer cycle ends; C.C.C. searches selection memory.

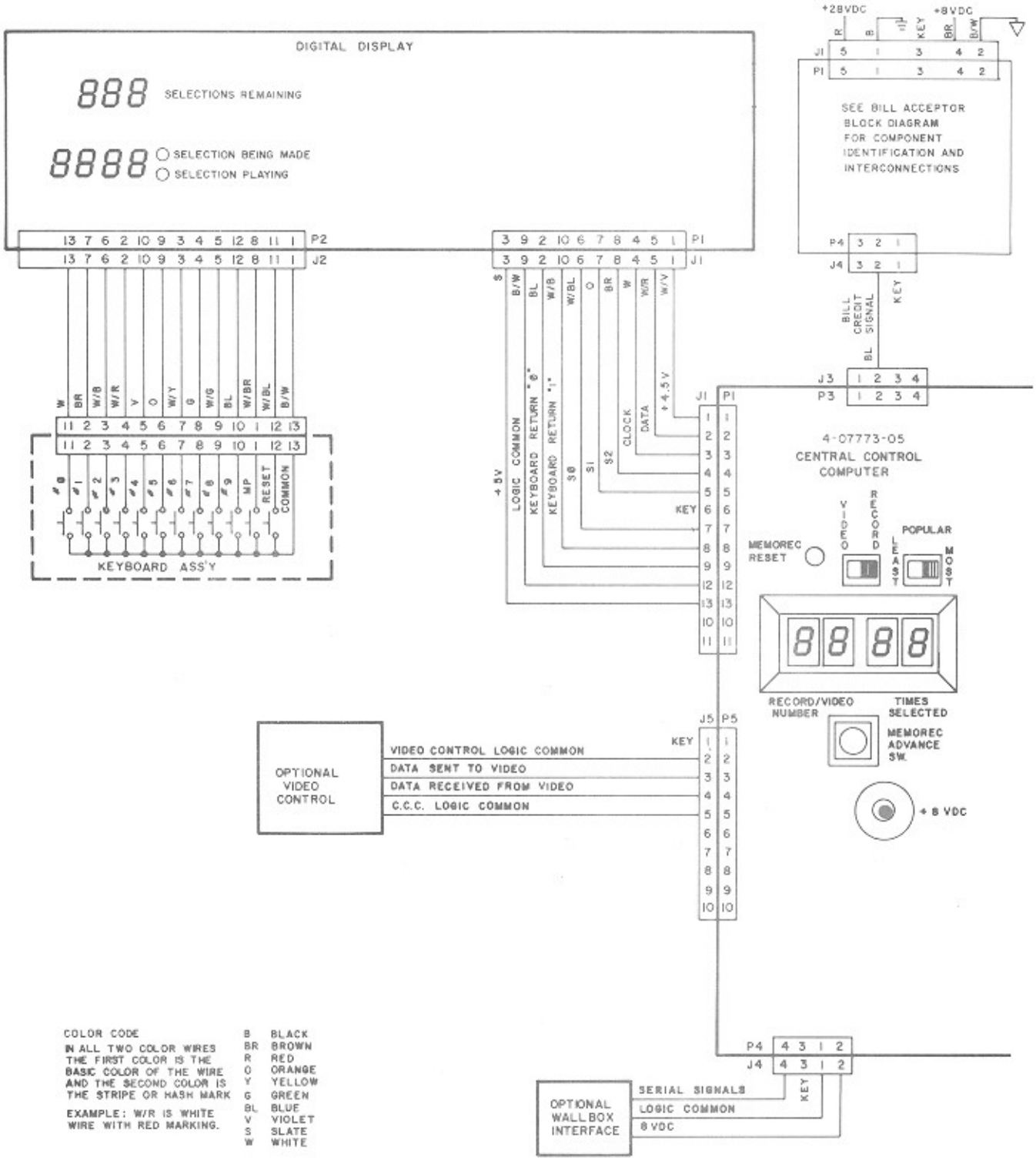

1. Cam rotates onto Inner Cam Switch.

2. Inner Cam SW. N.O. Contact signals the C.C.C. that the transfer cycle is complete.

3. C.C.C. turns off Tran Motor and T.T. Motor LED's causing Mechanism to turn off these motors.

4. C.C.C. electronically searches its selection memory. If the memory contains one or more selections, Sequences 7 through 12 will be repeated.

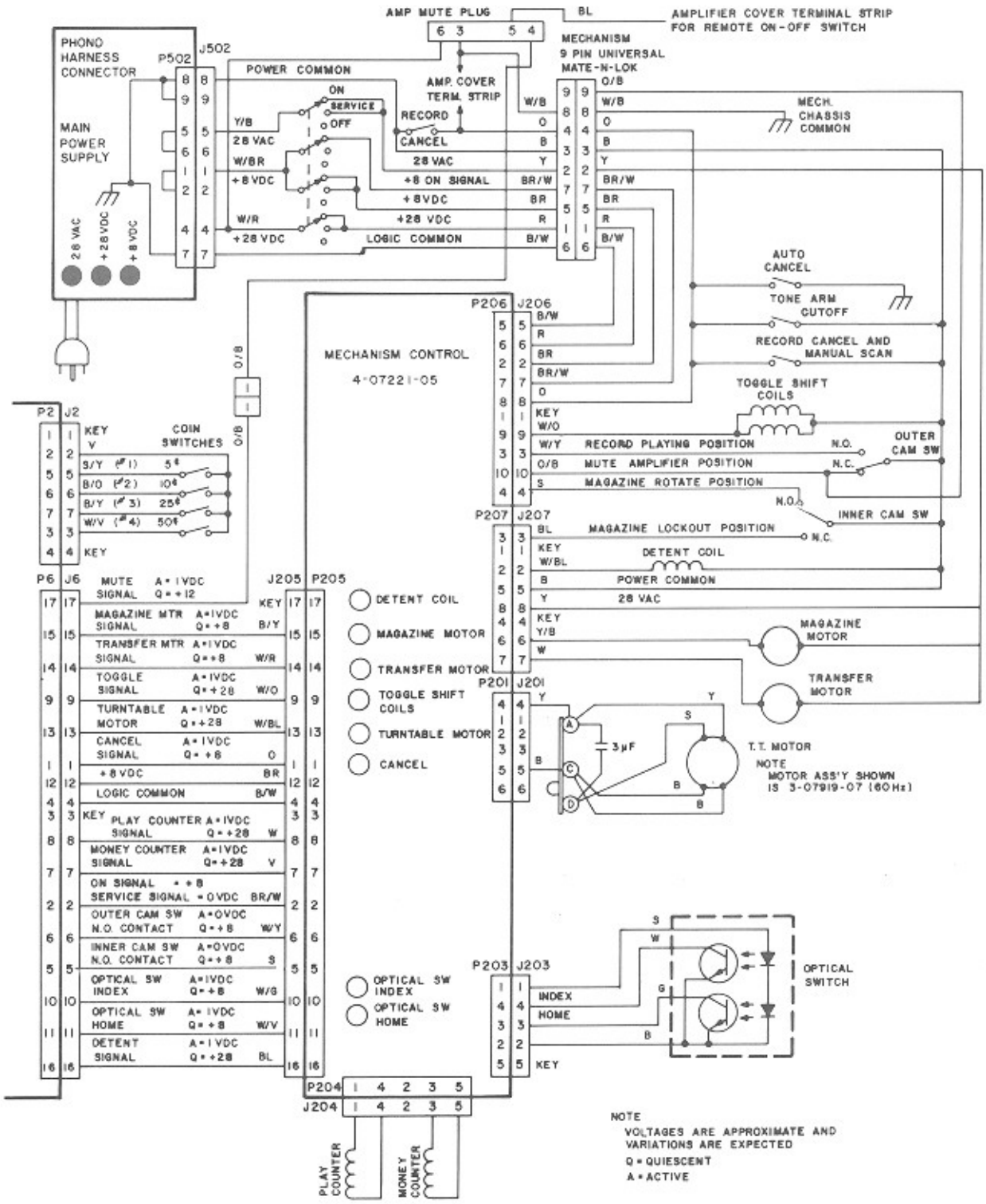
AMP MUTE PLUG
BL
AMPLIFIER COVER TERMINAL STRIP FOR REMOTE ON-OFF SWITCH
PHONO HARNESS CONNECTOR
P502
J502
POWER COMMON
AMP. COVER TERM. STRIP
MECHANISM 9 PIN UNIVERSAL MATE-N-LOK
MAIN POWER SUPPLY
ON
SERVICE
OFF
RECORD
CANCEL
Y/B
28 VAC
W/BR
+8 VDC
W/R
+28 VDC
+8 ON SIGNAL
LOGIC COMMON
O/B
W/B
MECH. CHASSIS COMMON
AUTO CANCEL
TONE ARM CUTOFF
RECORD CANCEL AND MANUAL SCAN
TOGGLE SHIFT COILS
P206
J206
MECHANISM CONTROL
4-07221-05
RECORD PLAYING POSITION
MUTE AMPLIFIER POSITION
MAGAZINE ROTATE POSITION
OUTER CAM SW
N.O.
N.C.
INNER CAM SW
P207
J207
MAGAZINE LOCKOUT POSITION
DETENT COIL
P2
J2
KEY
COIN SWITCHES
5¢
10¢
25¢
50¢
P6
J6
MUTE SIGNAL A = 1VDC Q = +12
MAGAZINE MTR SIGNAL A=1VDC Q=+8
TRANSFER MTR SIGNAL A=1VDC Q=+8
TOGGLE SIGNAL A=1VDC Q=+28
TURNTABLE MOTOR A=1VDC Q=+28
CANCEL SIGNAL A=1VDC Q=+8
+8VDC
LOGIC COMMON
PLAY COUNTER SIGNAL A=1VDC Q=+28
MONEY COUNTER SIGNAL A=1VDC Q=+28
ON SIGNAL = +8
SERVICE SIGNAL = 0VDC
OUTER CAM SW N.O. CONTACT A=0VDC Q=+8
INNER CAM SW N.O. CONTACT A=0VDC Q=+8
OPTICAL SW INDEX A=1VDC Q=+8
OPTICAL SW HOME A=1VDC Q=+8
DETENT SIGNAL A=1VDC Q=+28
J205
P205
DETENT COIL
MAGAZINE MOTOR
TRANSFER MOTOR
TOGGLE SHIFT COILS
TURNTABLE MOTOR
CANCEL
OPTICAL SW INDEX
OPTICAL SW HOME
P201
J201
3μF
T.T. MOTOR
NOTE
MOTOR ASS'Y SHOWN IS 3-07919-07 (60Hz)
P203
J203
INDEX
HOME
OPTICAL SWITCH
P204
J204
PLAY COUNTER
MONEY COUNTER
NOTE
VOLTAGES ARE APPROXIMATE AND VARIATIONS ARE EXPECTED
Q = QUIESCENT
A = ACTIVE

SEQUENCE DIAGRAM 13

All selections have been played. Phonograph returns to Standby condition and the Autoplay timing begins.

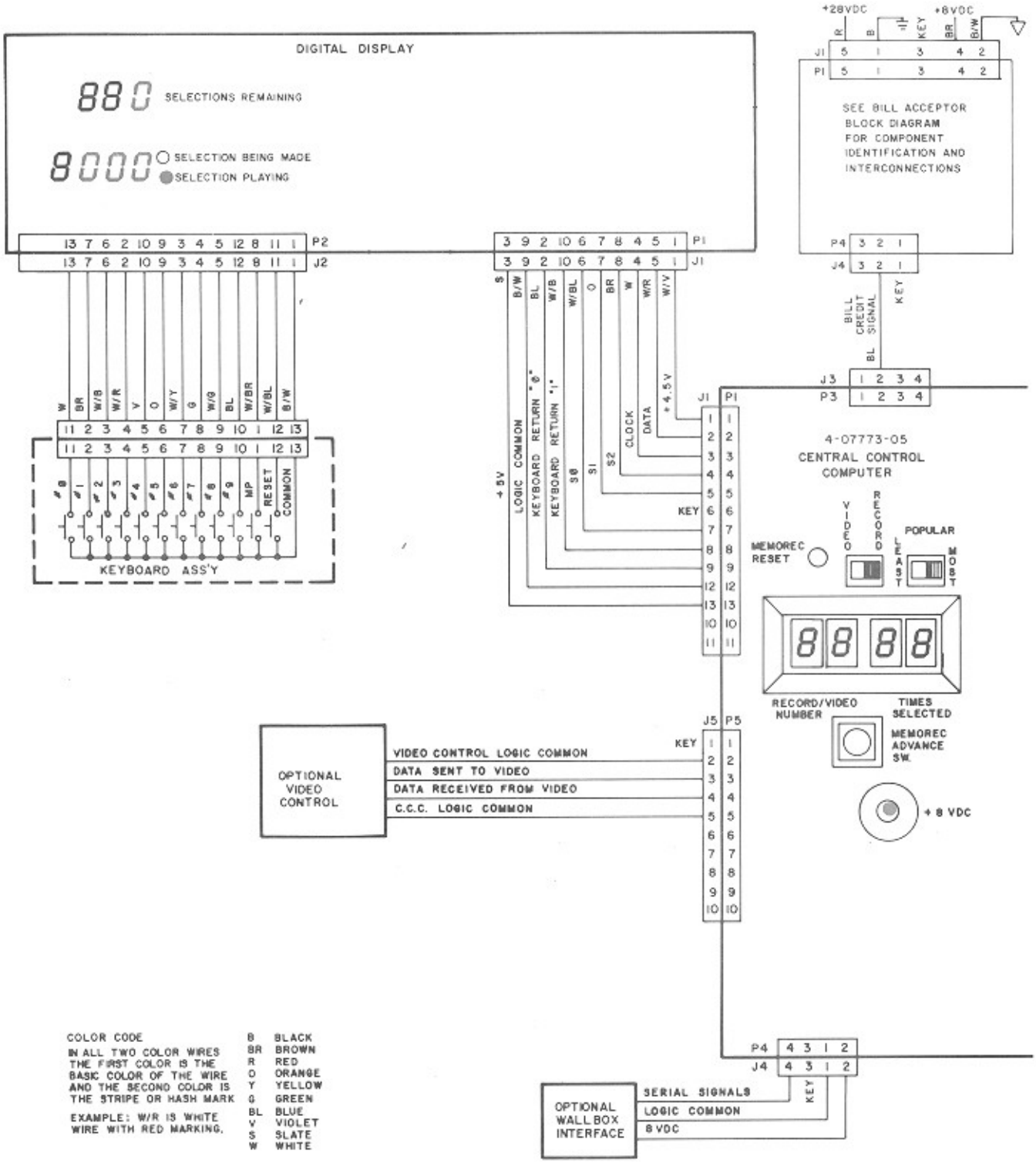

COLOR CODE

IN ALL TWO COLOR WIRES THE FIRST COLOR IS THE BASIC COLOR OF THE WIRE AND THE SECOND COLOR IS THE STRIPE OR HASH MARK

EXAMPLE: W/R IS WHITE WIRE WITH RED MARKING.

B	BLACK
BR	BROWN
R	RED
O	ORANGE
Y	YELLOW
G	GREEN
BL	BLUE
V	VIOLET
S	SLATE
W	WHITE

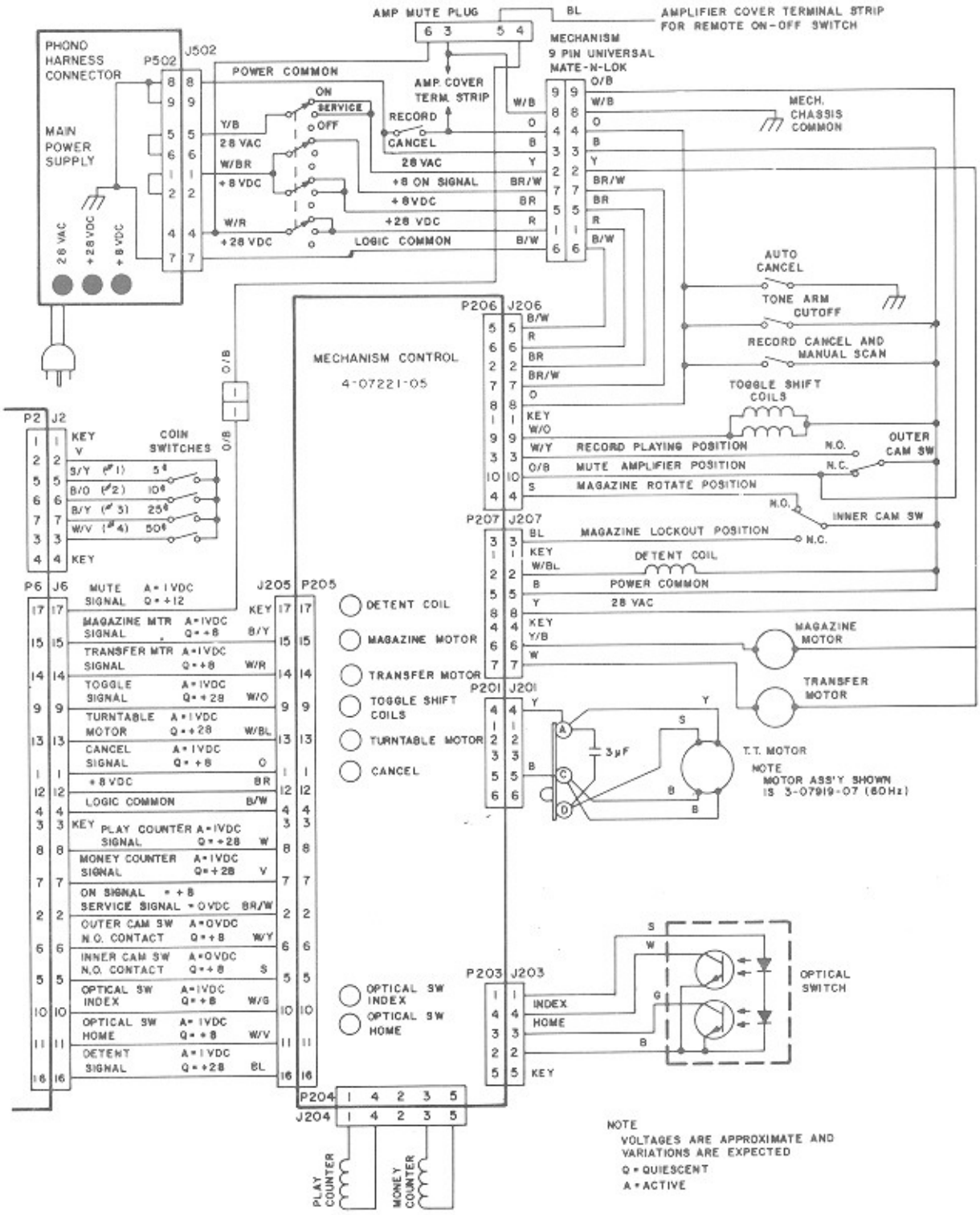
AMP MUTE PLUG
BL
AMPLIFIER COVER TERMINAL STRIP FOR REMOTE ON-OFF SWITCH
PHONO HARNESS CONNECTOR
P502
J502
MAIN POWER SUPPLY
28 VAC
+28 VDC
+8 VDC
POWER COMMON
ON
SERVICE
OFF
RECORD
CANCEL
AMP COVER TERM. STRIP
MECHANISM 9 PIN UNIVERSAL MATE-N-LOK
MECH. CHASSIS COMMON
+8 ON SIGNAL
LOGIC COMMON
AUTO CANCEL
TONE ARM CUTOFF
RECORD CANCEL AND MANUAL SCAN
TOGGLE SHIFT COILS
RECORD PLAYING POSITION
MUTE AMPLIFIER POSITION
MAGAZINE ROTATE POSITION
OUTER CAM SW
INNER CAM SW
MAGAZINE LOCKOUT POSITION
DETENT COIL
MAGAZINE MOTOR
TRANSFER MOTOR
T.T. MOTOR
NOTE
MOTOR ASS'Y SHOWN IS 3-07919-07 (60Hz)
MECHANISM CONTROL
4-07221-05
P206
J206
P207
J207
P201
J201
P2
J2
KEY
COIN SWITCHES
P6
J6
MUTE SIGNAL
MAGAZINE MTR SIGNAL
TRANSFER MTR SIGNAL
TOGGLE SIGNAL
TURNTABLE MOTOR
CANCEL SIGNAL
+8 VDC
LOGIC COMMON
PLAY COUNTER SIGNAL
MONEY COUNTER SIGNAL
ON SIGNAL
SERVICE SIGNAL
OUTER CAM SW N.O. CONTACT
INNER CAM SW N.O. CONTACT
OPTICAL SW INDEX
OPTICAL SW HOME
DETENT SIGNAL
J205
P205
DETENT COIL
MAGAZINE MOTOR
TRANSFER MOTOR
TOGGLE SHIFT COILS
TURNTABLE MOTOR
CANCEL
OPTICAL SW INDEX
OPTICAL SW HOME
P203
J203
OPTICAL SWITCH
P204
J204
PLAY COUNTER
MONEY COUNTER
NOTE
VOLTAGES ARE APPROXIMATE AND VARIATIONS ARE EXPECTED
Q = QUIESCENT
A = ACTIVE

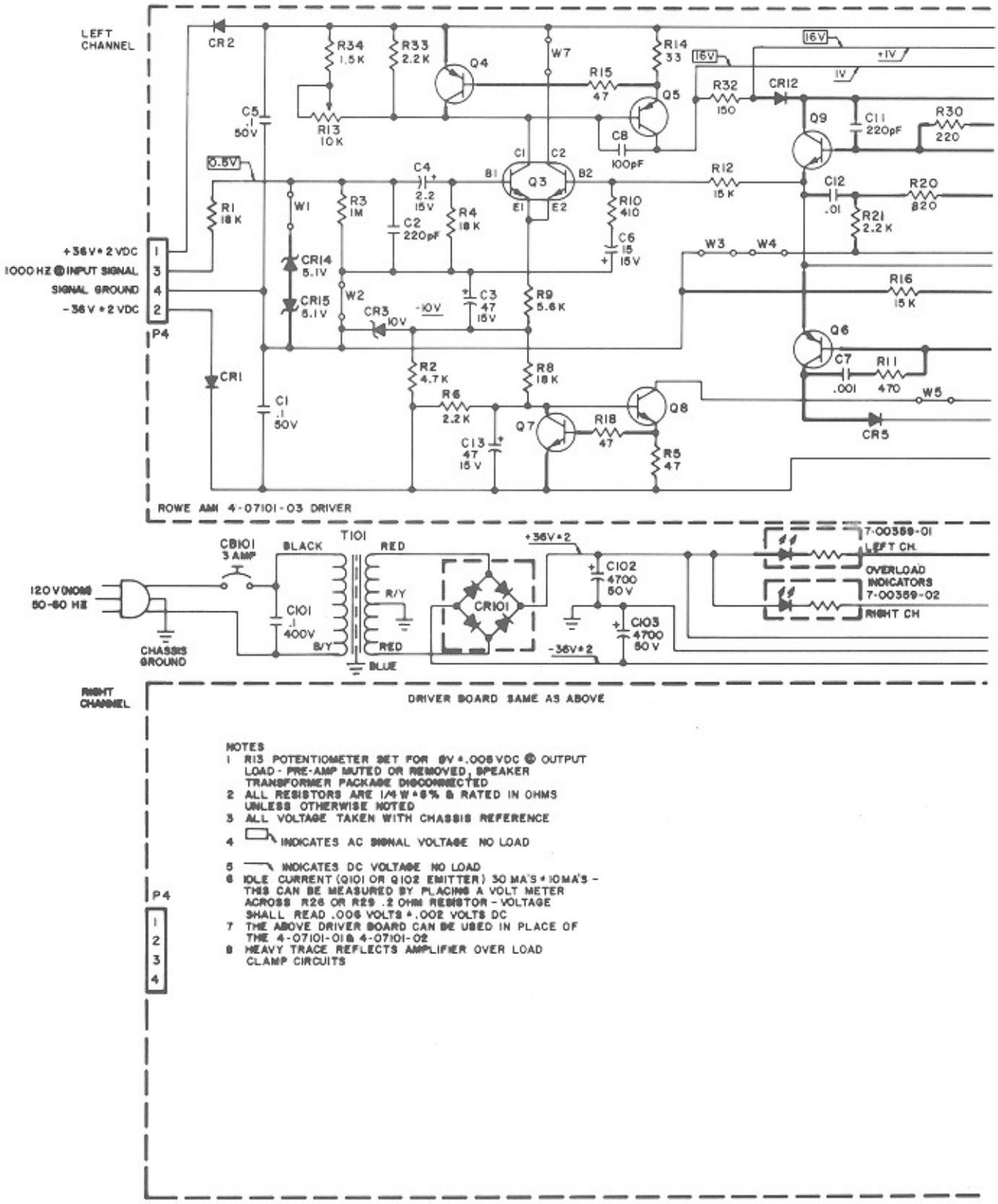

NOTES

1 R13 POTENTIOMETER SET FOR 0V ±.006VDC @ OUTPUT LOAD - PRE-AMP MUTED OR REMOVED, SPEAKER TRANSFORMER PACKAGE DISCONNECTED
2 ALL RESISTORS ARE 1/4W ±5% & RATED IN OHMS UNLESS OTHERWISE NOTED
3 ALL VOLTAGE TAKEN WITH CHASSIS REFERENCE
4 INDICATES AC SIGNAL VOLTAGE NO LOAD
5 INDICATES DC VOLTAGE NO LOAD
6 IDLE CURRENT (Q101 OR Q102 EMITTER) 30 MA'S ± 10MA'S - THIS CAN BE MEASURED BY PLACING A VOLT METER ACROSS R26 OR R29 .2 OHM RESISTOR - VOLTAGE SHALL READ .006 VOLTS ± .002 VOLTS DC
7 THE ABOVE DRIVER BOARD CAN BE USED IN PLACE OF THE 4-07101-01 & 4-07101-02
8 HEAVY TRACE REFLECTS AMPLIFIER OVER LOAD CLAMP CIRCUITS

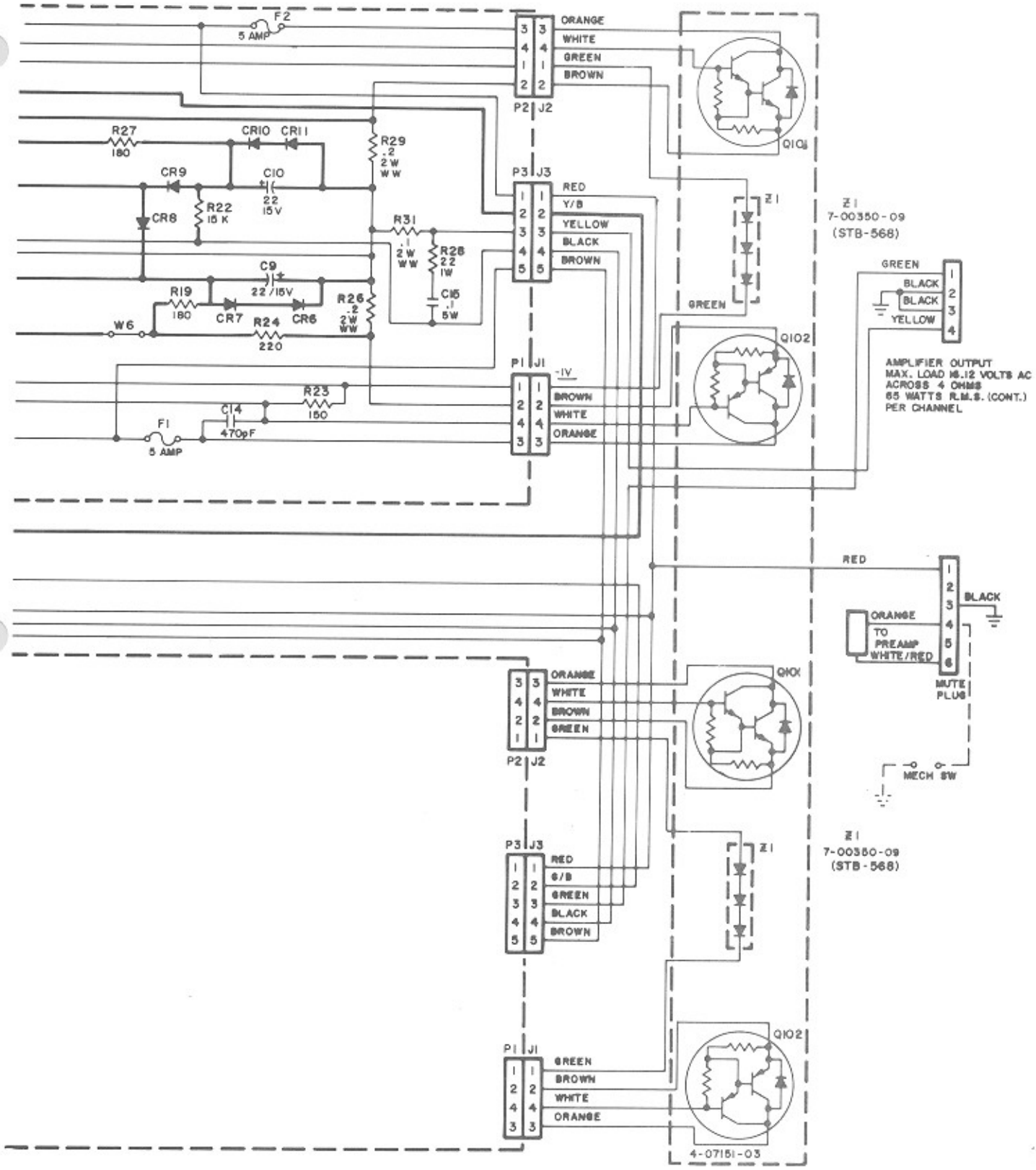

FOR EQUIV ENG'G DWG SEE 6-09931-01-Q2

6-09931-01-Q2
SCHEMATIC DIAGRAM -
130 WATT AMP (POWER AMP)

FIGURE 5-2

COMPONENT LIST FOR 4-07101-03

C1	Capacitor - Monolithic .1 Mfd	7-00286-49
C2	Capacitor - Monolithic 220 pF	7-00286-06
C3	Capacitor - Electrolytic 47 Mfd	7-00238-12
C4	Capacitor - Electrolytic 2.2 Mfd	7-00238-05
C5	Capacitor - Monolithic .1 Mfd	7-00286-49
C6	Capacitor - Electrolytic 15 Mfd	7-00238-09
C7	Capacitor - Monolithic .01 pF	7-00286-36
C8	Capacitor - Monolithic 100 pF	7-00286-01
C9	Capacitor - Electrolytic 22 Mfd	7-00238-10
C10	Capacitor - Electrolytic 22 Mfd	7-00238-10
C11	Capacitor - Monolithic 220 pF	7-00286-06
C12	Capacitor - Monolithic .01 pF	7-00286-36
C13	Capacitor - Electrolytic 47 Mfd	7-00238-12
C14	Capacitor - Monolithic 470 pF	7-00286-12
C15	Capacitor - Mylar .10 Mfd	7-00240-02
CR1	Diode - Silicon	7-00350-02
CR2	Diode - Silicon	7-00350-02
CR3	Diode - Zener 10V	7-00355-14
CR4	Not Used	
CR5	Diode - Silicon	7-00350-05
CR6	Diode - Silicon	7-00350-05
CR7	Diode - Silicon	7-00350-05
CR8	Diode - Silicon	7-00350-05
CR9	Diode - Silicon	7-00350-05
CR10	Diode - Silicon	7-00350-05
CR11	Diode - Silicon	7-00350-05
CR12	Diode - Silicon	7-00350-05
CR13	Not Used	
CR14	Diode - Zener 5.1V	7-00355-27
CR15	Diode - Zener 5.1V	7-00355-27
F1	Fuse - 5 Amp	7-00720-10
F2	Fuse - 5 Amp	7-00720-10
P1	Wafer - Polarized 4 Ckt	7-00750-04
P2	Wafer - Polarized 4 Ckt	7-00750-04
P3	Wafer - Polarized 5 Ckt	7-00750-05
P4	Wafer - Non-Polarized 4 Ckt	7-00749-04
Q1	Not Used	
Q2	Not Used	
Q3	Transistor - Dual (NPN)	7-00303-01
Q4	Transistor (PNP)	7-00301-04
Q5	Transistor (PNP)	7-00301-04
Q6	Transistor (PNP)	7-00301-04
Q7	Transistor (NPN)	7-00300-08
Q8	Transistor (NPN)	7-00300-08
Q9	Transistor (NPN)	7-00300-08

R1	Resistor - Carbon (1/4 W, 5%) 18K	7-9901-183
R2	Resistor - Carbon (1/4 W, 5%) 4.7K	7-9901-472
R3	Resistor - Carbon (1/4 W, 5%) 1 Meg	7-9901-105
R4	Resistor - Carbon (1/4 W, 5%) 18K	7-9901-183
R5	Resistor - Carbon (1/4 W, 5%) 47 Ohm	7-9901-470
R6	Resistor - Carbon (1/4 W, 5%) 2.2K	7-9901-222
R7	Not Used	
R8	Resistor - Carbon (1/4 W, 5%) 18K	7-9901-183
R9	Resistor - Carbon (1/4 W, 5%) 5.6K	7-9901-562
R10	Resistor - Carbon (1/4 W, 5%) 470 Ohm	7-9901-471
R11	Resistor - Carbon (1/4 W, 5%) 470 Ohm	7-9901-471
R12	Resistor - Carbon (1/4 W, 5%) 16K	7-9901-163
R13	Resistor - Potentiometer (1/4 W) 10K	7-00400-14
R14	Resistor - Carbon (1/4 W, 5%) 33 Ohm	7-9901-330
R15	Resistor - Carbon (1/4 W, 5%) 47 Ohm	7-9901-470
R16	Resistor - Carbon (1/4 W, 5%) 15K	7-9901-153
R17	Not Used	
R18	Resistor - Carbon (1/4 W, 5%) 47 Ohm	7-9901-470
R19	Resistor - Carbon (1/4 W, 5%) 180 Ohm	7-9901-181
R20	Resistor - Carbon (1/4 W, 5%) 820 Ohm	7-9901-821
R21	Resistor - Carbon (1/4 W, 5%) 2.2K	7-9901-222
R22	Resistor - Carbon (1/4 W, 5%) 15K	7-9901-153
R23	Resistor - Carbon (1/4 W, 5%) 150 Ohm	7-9901-151
R24	Resistor - Carbon (1/4 W, 5%) 220 Ohm	7-9901-221
R25	Not Used	
R26	Resistor - Wire Wound (2 W, 10%) .2 Ohm	2-16280-01
R27	Resistor - Carbon (1/4 W, 5%) 180 Ohm	7-9901-181
R28	Resistor - Carbon (1 W, 10%) 22 Ohm	2-16282-08
R29	Resistor - Wire Wound (2 W, 10%) .2 Ohm	2-16280-01
R30	Resistor - Carbon (1/4 W, 5%) 220 Ohm	7-9901-221
R31	Resistor - Wire Wound (2 W, 10%) .1 Ohm	2-16280-02
R32	Resistor - Carbon (1/4 W, 5%) 150 Ohm	7-9901-151
R33	Resistor - Carbon (1/4 W, 5%) 2.2 K	7-9901-222
R34	Resistor - Carbon (1/4 W, 5%) 1.5 K	7-9901-152
W1 Thru W7	Wire - Bare	0-05032-00

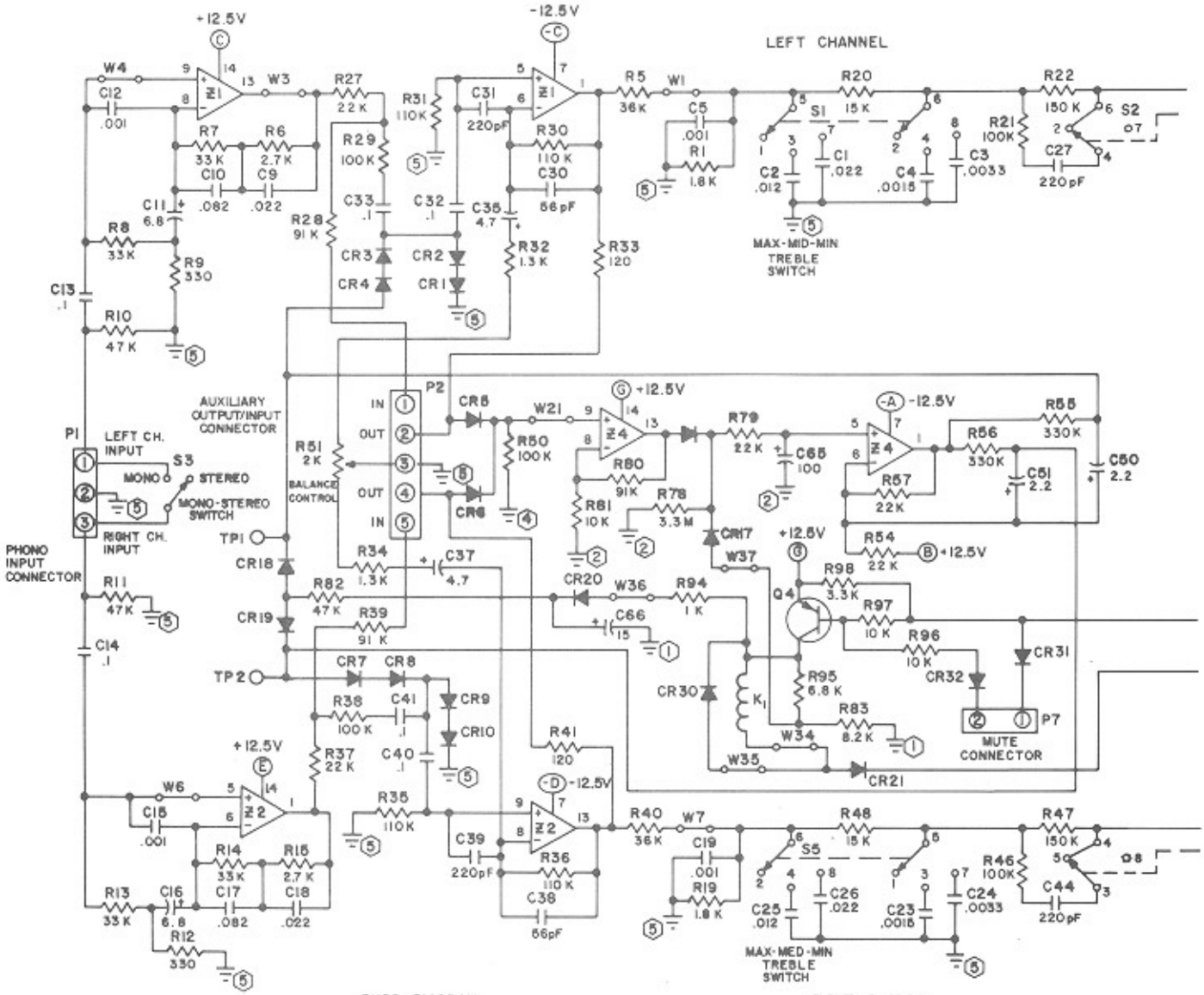

BUSS DIAGRAM

+12.5V & -12.5V LINES START FROM EACH RESPECTIVE REGULATOR
GROUND LINE STARTS FROM POWER AMP GROUND AT P5 OR P6

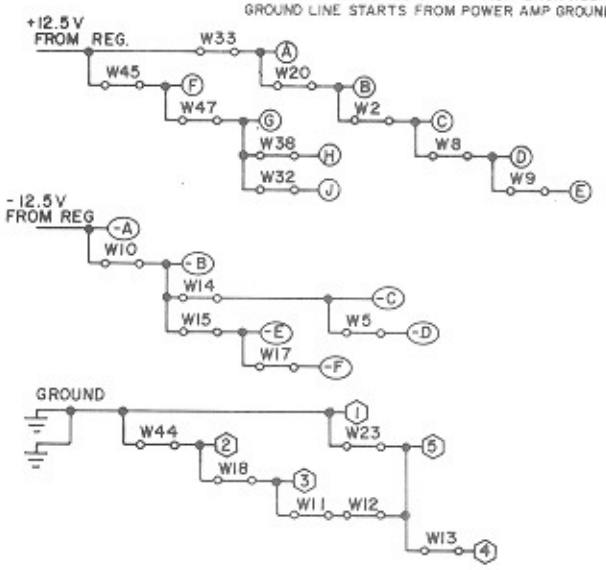

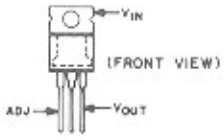

VR1(-) VOLTAGE REGULATOR(LM337) NEGATIVE 7-00365-08

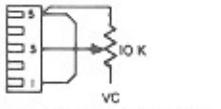

2 WIRE VOLUME CONTROL

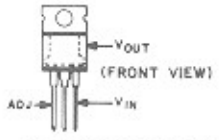

VR2(+) VOLTAGE REGULATOR(LM317) POSITIVE 7-00365-07

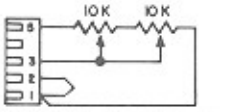

DUAL 2 WIRE VOLUME CONTROL

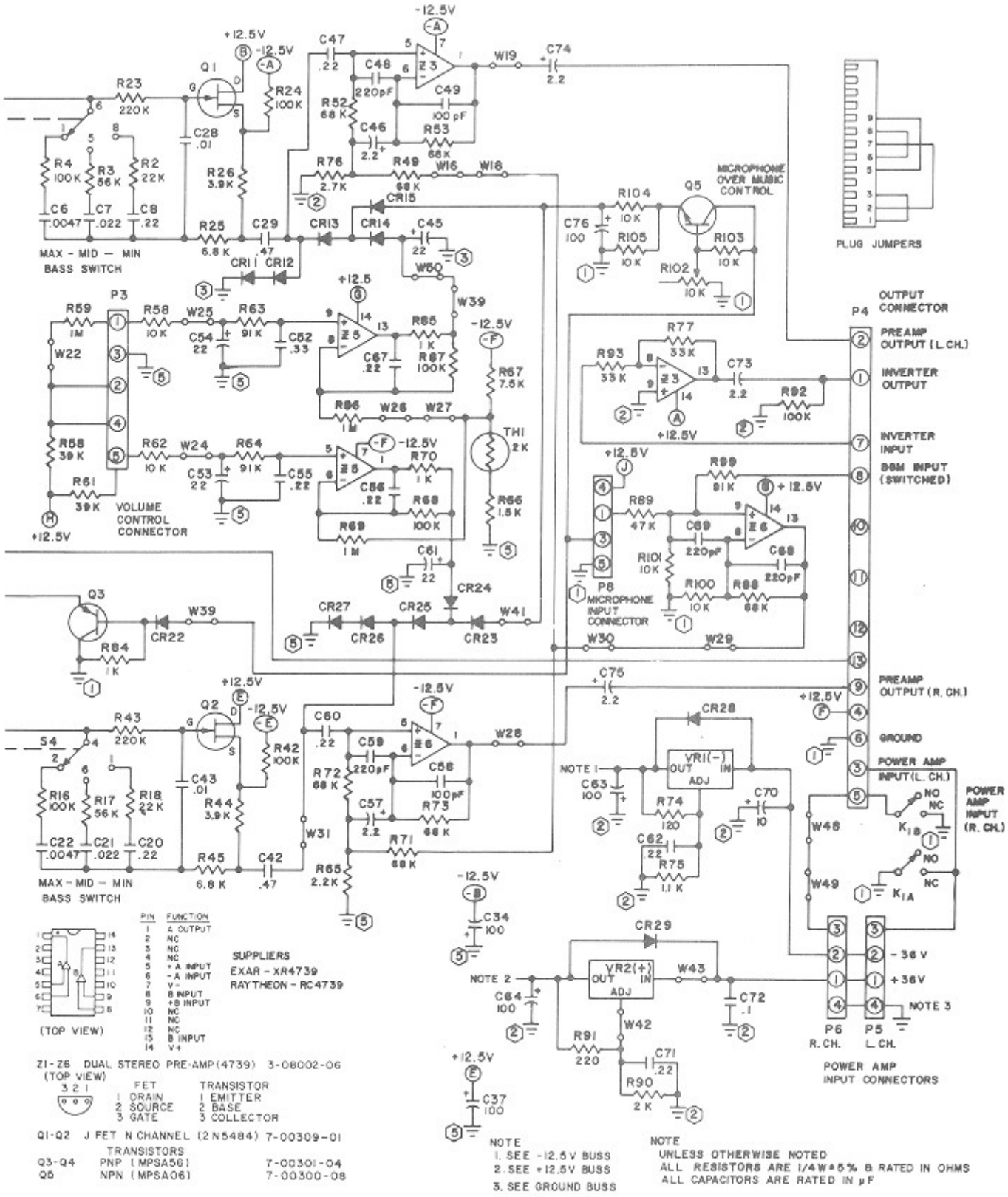

FOR EQUIV. ENG'G DWG SEE 6-07925-04

6-07925-04-02
SCHEMATIC DIAGRAM - STEREO PREAMP ASS'Y

FIGURE 5-3

COMPONENT LIST FOR 6-07925-04

C1	CAPACITOR - MONOLITHIC CERAMIC	.022 Mfd	7-00286-41
C2	CAPACITOR - MONOLITHIC CERAMIC	.012 Mfd	7-00286-38
C3	CAPACITOR - MONOLITHIC CERAMIC	.0033 Mfd	7-00286-27
C4	CAPACITOR - MONOLITHIC CERAMIC	.0015 Mfd	7-00286-21
C5	CAPACITOR - MONOLITHIC CERAMIC	.001 Mfd	7-00286-18
C6	CAPACITOR - MONOLITHIC CERAMIC	.0047 Mfd	7-00286-30
C7	CAPACITOR - MONOLITHIC CERAMIC	.022 Mfd	7-00286-41
C8	CAPACITOR - MONOLITHIC CERAMIC	.22 Mfd	7-00285-10
C9	CAPACITOR - MONOLITHIC CERAMIC	.022 Mfd	7-00286-41
C10	CAPACITOR - MONOLITHIC CERAMIC	.082 Mfd	7-00285-48
C11	CAPACITOR - ELECTROLYTIC	6.8 Mfd	7-00238-07
C12	CAPACITOR - MONOLITHIC CERAMIC	.001 Mfd	7-00286-18
C13	CAPACITOR - MONOLITHIC CERAMIC	.1 Mfd	7-00285-14
C14	CAPACITOR - MONOLITHIC CERAMIC	.1 Mfd	7-00285-14
C15	CAPACITOR - MONOLITHIC CERAMIC	.001 Mfd	7-00286-18
C16	CAPACITOR - ELECTROLYTIC	6.8 Mfd	7-00238-07
C17	CAPACITOR - MONOLITHIC CERAMIC	.082 Mfd	7-00285-48
C18	CAPACITOR - MONOLITHIC CERAMIC	.022 Mfd	7-00286-41
C19	CAPACITOR - MONOLITHIC CERAMIC	.001 Mfd	7-00286-18
C20	CAPACITOR - MONOLITHIC CERAMIC	.22 Mfd	7-00285-10
C21	CAPACITOR - MONOLITHIC CERAMIC	.022 Mfd	7-00286-41
C22	CAPACITOR - MONOLITHIC CERAMIC	.0047 Mfd	7-00286-30
C23	CAPACITOR - MONOLITHIC CERAMIC	.0015 Mfd	7-00286-21
C24	CAPACITOR - MONOLITHIC CERAMIC	.0033 Mfd	7-00286-27
C25	CAPACITOR - MONOLITHIC CERAMIC	.012 Mfd	7-00286-38
C26	CAPACITOR - MONOLITHIC CERAMIC	.022 Mfd	7-00286-41
C27	CAPACITOR - MONOLITHIC CERAMIC	220 Pf	7-00286-06
C28	CAPACITOR - MONOLITHIC CERAMIC	.01 Mfd	7-00286-37
C29	CAPACITOR - MONOLITHIC CERAMIC	.47 Mfd	7-00285-16
C30	CAPACITOR - MONOLITHIC CERAMIC	56 Pf	7-00287-10
C31	CAPACITOR - MONOLITHIC CERAMIC	220 Pf	7-00286-06
C32	CAPACITOR - MONOLITHIC CERAMIC	.1 Mfd	7-00285-14
C33	CAPACITOR - MONOLITHIC CERAMIC	.1 Mfd	7-00285-14
C34	CAPACITOR - ELECTROLYTIC	100 Mfd	7-00238-14
C35	CAPACITOR - ELECTROLYTIC	4.7 Mfd	7-00238-06
C36	CAPACITOR - ELECTROLYTIC	100 Mfd	7-00238-14
C37	CAPACITOR - ELECTROLYTIC	4.7 Mfd	7-00238-06
C38	CAPACITOR - MONOLITHIC CERAMIC	56 Pf	7-00287-10
C39	CAPACITOR - MONOLITHIC CERAMIC	220 Pf	7-00286-06
C40	CAPACITOR - MONOLITHIC CERAMIC	.1 Mfd	7-00285-14
C41	CAPACITOR - MONOLITHIC CERAMIC	.1 Mfd	7-00285-14
C42	CAPACITOR - MONOLITHIC CERAMIC	.47 Mfd	7-00285-16
C43	CAPACITOR - MONOLITHIC CERAMIC	.01 Mfd	7-00286-37
C44	CAPACITOR - MONOLITHIC CERAMIC	220 Pf	7-00286-06
C45	CAPACITOR - ELECTROLYTIC	22 Mfd	7-00238-10
C46	CAPACITOR - ELECTROLYTIC	2.2 Mfd	7-00238-05
C47	CAPACITOR - ELECTROLYTIC	.22 Mfd	7-00285-10
C48	CAPACITOR - ELECTROLYTIC	220 Pf	7-00286-06
C49	CAPACITOR - ELECTROLYTIC	100 Pf	7-00286-01
C50	CAPACITOR - ELECTROLYTIC	2.2 Mfd	7-00238-05
C51	CAPACITOR - ELECTROLYTIC	2.2 Mfd	7-00238-05
C52	CAPACITOR - MONOLITHIC CERAMIC	.33 Mfd	7-00285-15
C53	CAPACITOR - ELECTROLYTIC	2.2 Mfd	7-00238-05
C54	CAPACITOR - ELECTROLYTIC	2.2 Mfd	7-00238-05
C55	CAPACITOR - MONOLITHIC CERAMIC	.33 Mfd	7-00285-15
C56	CAPACITOR - MONOLITHIC CERAMIC	.22 Mfd	7-00285-10
C57	CAPACITOR - ELECTROLYTIC	2.2 Mfd	7-00238-05
C58	CAPACITOR - MONOLITHIC CERAMIC	100 Pf	7-00286-01

C59	CAPACITOR - MONOLITHIC CERAMIC 220 Pf	7-00286-06
C60	CAPACITOR - MONOLITHIC CERAMIC .22 Mfd	7-00285-10
C61	CAPACITOR - ELECTROLYTIC 22 Mfd	7-00238-10
C62	CAPACITOR - MONOLITHIC CERAMIC .22 Mfd	7-00285-10
C63	CAPACITOR - ELECTROLYTIC 100 Mfd	7-00238-14
C64	CAPACITOR - ELECTROLYTIC 100 Mfd	7-00238-14
C65	CAPACITOR - ELECTROLYTIC 100 Mfd	7-00238-14
C66	CAPACITOR - ELECTROLYTIC 15 Mfd	7-00238-09
C67	CAPACITOR - MONOLITHIC CERAMIC .22 Mfd	7-00285-10
C68	CAPACITOR - MONOLITHIC CERAMIC 220 Pf	7-00286-06
C69	CAPACITOR - MONOLITHIC CERAMIC 220 Pf	7-00286-06
C70	CAPACITOR - ELECTROLYTIC 10 Mfd	7-00238-08
C71	CAPACITOR - MONOLITHIC CERAMIC .22 Mfd	7-00285-10
C72	CAPACITOR - MONOLITHIC CERAMIC .1 Mfd	7-00285-14
C73	CAPACITOR - ELECTROLYTIC 2.2 Mfd	7-00238-05
C74	CAPACITOR - ELECTROLYTIC 2.2 Mfd	7-00238-05
C75	CAPACITOR - ELECTROLYTIC 2.2 Mfd	7-00238-05
C76	CAPACITOR - ELECTROLYTIC 100 Mfd	7-00238-14
CR1 - CR32	DIODE - SILICON	7-00350-07
K1	RELAY - REED	7-00422-08
P1	NON-POLARIZING WAFER ASSEMBLY (3 CKT)	7-00749-21
P2	NON-POLARIZING WAFER ASSEMBLY (5 CKT)	7-00749-23
P3	NON-POLARIZING WAFER ASSEMBLY (5 CKT)	7-00749-23
P4	NON-POLARIZING WAFER ASSEMBLY (13 CKT)	7-00749-31
P5	P.C. BOARD CONNECTOR - TOP ENTRY (4 CKT)	7-00748-02
P6	P.C. BOARD CONNECTOR - TOP ENTRY (4 CKT)	7-00748-02
P7	POLARIZING WAFER ASSEMBLY (2 CKT)	7-00750-02
P8	NON-POLARIZING WAFER ASSEMBLY (5 CKT)	7-00749-23
Q1	TRANSISTOR - JUNCTION FIELD EFFECT	7-00309-01
Q2	TRANSISTOR - JUNCTION FIELD EFFECT	7-00309-01
Q3	TRANSISTOR - SILICON (PNP)	7-00301-04
Q4	TRANSISTOR - SILICON (PNP)	7-00301-04
Q5	TRANSISTOR - SILICON (NPN)	7-00301-08
R1	RESISTOR - CARBON (1/4W,5%) 1.8K	7-9901-182
R2	RESISTOR - CARBON (1/4W,5%) 2.2K	7-9901-222
R3	RESISTOR - CARBON (1/4W,5%) 56K	7-9901-563
R4	RESISTOR - CARBON (1/4W,5%) 100K	7-9901-104
R5	RESISTOR - CARBON (1/4W,5%) 36K	7-9901-363
R6	RESISTOR - CARBON (1/4W,5%) 2.7K	7-9901-272
R7	RESISTOR - CARBON (1/4W,5%) 33K	7-9901-333
R8	RESISTOR - CARBON (1/4W,5%) 33K	7-9901-333
R9	RESISTOR - CARBON (1/4W,5%) 330 Ohm	7-9901-331
R10	RESISTOR - CARBON (1/4W,5%) 47K	7-9901-473
R11	RESISTOR - CARBON (1/4W,5%) 47K	7-9901-473
R12	RESISTOR - CARBON (1/4W,5%) 330 Ohm	7-9901-331
R13	RESISTOR - CARBON (1/4W,5%) 33K	7-9901-333
R14	RESISTOR - CARBON (1/4W,5%) 33K	7-9901-333
R15	RESISTOR - CARBON (1/4W,5%) 2.7K	7-9901-272
R16	RESISTOR - CARBON (1/4W,5%) 100K	7-9901-104
R17	RESISTOR - CARBON (1/4W,5%) 56K	7-9901-563
R18	RESISTOR - CARBON (1/4W,5%) 22K	7-9901-223
R19	RESISTOR - CARBON (1/4W,5%) 1.8K	7-9901-182
R20	RESISTOR - CARBON (1/4W,5%) 15K	7-9901-153
R21	RESISTOR - CARBON (1/4W,5%) 100K	7-9901-104
R22	RESISTOR - CARBON (1/4W,5%) 150K	7-9901-154

R23	RESISTOR - CARBON	(1/4W,5%)	220K	7-9901-224
R24	RESISTOR - CARBON	(1/4W,5%)	100K	7-9901-104
R25	RESISTOR - CARBON	(1/4W,5%)	6.8K	7-9901-682
R26	RESISTOR - CARBON	(1/4W,5%)	3.9K	7-9901-392
R27	RESISTOR - CARBON	(1/4W,5%)	22K	7-9901-223
R28	RESISTOR - CARBON	(1/4W,5%)	91K	7-9901-913
R29	RESISTOR - CARBON	(1/4W,5%)	100K	7-9901-104
R30	RESISTOR - CARBON	(1/4W,5%)	110K	7-9901-114
R31	RESISTOR - CARBON	(1/4W,5%)	110K	7-9901-114
R32	RESISTOR - CARBON	(1/4W,5%)	1.3K	7-9901-132
R33	RESISTOR - CARBON	(1/4W,5%)	120 Ohm	7-9901-121
R34	RESISTOR - CARBON	(1/4W,5%)	120 Ohm	7-9901-121
R35	RESISTOR - CARBON	(1/4W,5%)	110K	7-9901-114
R36	RESISTOR - CARBON	(1/4W,5%)	110K	7-9901-114
R37	RESISTOR - CARBON	(1/4W,5%)	22K	7-9901-223
R38	RESISTOR - CARBON	(1/4W,5%)	100K	7-9901-104
R39	RESISTOR - CARBON	(1/4W,5%)	91K	7-9901-913
R40	RESISTOR - CARBON	(1/4W,5%)	36K	7-9901-363
R41	RESISTOR - CARBON	(1/4W,5%)	120 Ohm	7-9901-121
R42	RESISTOR - CARBON	(1/4W,5%)	100K	7-9901-104
R43	RESISTOR - CARBON	(1/4W,5%)	220K	7-9901-224
R44	RESISTOR - CARBON	(1/4W,5%)	3.9K	7-9901-392
R45	RESISTOR - CARBON	(1/4W,5%)	6.8K	7-9901-682
R46	RESISTOR - CARBON	(1/4W,5%)	100K	7-9901-104
R47	RESISTOR - CARBON	(1/4W,5%)	150K	7-9901-154
R48	RESISTOR - CARBON	(1/4W,5%)	15K	7-9901-153
R49	RESISTOR - CARBON	(1/4W,5%)	68K	7-9901-683
R50	RESISTOR - CARBON	(1/4W,5%)	100K	7-9901-104
R51	POTENTIOMETER (BAL)		2K	7-00400-12
R52	RESISTOR - CARBON	(1/4W,5%)	68K	7-9901-683
R53	RESISTOR - CARBON	(1/4W,5%)	68K	7-9901-683
R54	RESISTOR - CARBON	(1/4W,5%)	22K	7-9901-223
R55	RESISTOR - CARBON	(1/4W,5%)	330K	7-9901-334
R56	RESISTOR - CARBON	(1/4W,5%)	330K	7-9901-334
R57	RESISTOR - CARBON	(1/4W,5%)	22K	7-9901-223
R58	RESISTOR - CARBON	(1/4W,5%)	10K	7-9901-103
R59	RESISTOR - CARBON	(1/4W,5%)	1 MEG	7-9901-105
R60	RESISTOR - CARBON	(1/4W,5%)	39K	7-9901-393
R61	RESISTOR - CARBON	(1/4W,5%)	39K	7-9901-393
R62	RESISTOR - CARBON	(1/4W,5%)	10K	7-9901-103
R63	RESISTOR - CARBON	(1/4W,5%)	91K	7-9901-913
R64	RESISTOR - CARBON	(1/4W,5%)	91K	7-9901-913
R65	RESISTOR - CARBON	(1/4W,5%)	2.7K	7-9901-272
R66	RESISTOR - CARBON	(1/4W,5%)	1.5K	7-9901-152
R67	RESISTOR - CARBON	(1/4W,5%)	7.5K	7-9901-752
R68	RESISTOR - CARBON	(1/4W,5%)	100K	7-9901-104
R69	RESISTOR - CARBON	(1/4W,5%)	1 MEG	7-9901-105
R70	RESISTOR - CARBON	(1/4W,5%)	1K	7-9901-102
R71	RESISTOR - CARBON	(1/4W,5%)	68K	7-9901-683
R72	RESISTOR - CARBON	(1/4W,5%)	68K	7-9901-683
R73	RESISTOR - CARBON	(1/4W,5%)	68K	7-9901-683
R74	RESISTOR - CARBON	(1/4W,5%)	120 Ohm	7-9901-121
R75	RESISTOR - CARBON	(1/4W,5%)	1.1K	7-9901-112
R76	RESISTOR - CARBON	(1/4W,5%)	2.7K	7-9901-272
R77	RESISTOR - CARBON	(1/4W,5%)	33K	7-9901-333
R78	RESISTOR - CARBON	(1/4W,5%)	3.3 MEG	7-9901-335
R79	RESISTOR - CARBON	(1/4W,5%)	22K	7-9901-223
R80	RESISTOR - CARBON	(1/4W,5%)	91K	7-9901-913

R81	RESISTOR - CARBON	(1/4W,5%)	10K	7-9901-103
R82	RESISTOR - CARBON	(1/4W,5%)	47K	7-9901-473
R83	RESISTOR - CARBON	(1/4W,5%)	8.2K	7-9901-822
R84	RESISTOR - CARBON	(1/4W,5%)	1K	7-9901-102
R85	RESISTOR - CARBON	(1/4W,5%)	1K	7-9901-102
R86	RESISTOR - CARBON	(1/4W,5%)	1 MEG	7-9901-105
R87	RESISTOR - CARBON	(1/4W,5%)	100K	7-9901-104
R88	RESISTOR - CARBON	(1/4W,5%)	68K	7-9901-683
R89	RESISTOR - CARBON	(1/4W,5%)	47K	7-9901-473
R90	RESISTOR - CARBON	(1/4W,5%)	2K	7-9901-202
R91	RESISTOR - CARBON	(1/4W,5%)	220 Ohm	7-9901-221
R92	RESISTOR - CARBON	(1/4W,5%)	100K	7-9901-104
R93	RESISTOR - CARBON	(1/4W,5%)	33K	7-9901-333
R94	RESISTOR - CARBON	(1/4W,5%)	1K	7-9901-102
R95	RESISTOR - CARBON	(1/4W,5%)	6.8K	7-9901-682
R96	RESISTOR - CARBON	(1/4W,5%)	10K	7-9901-103
R97	RESISTOR - CARBON	(1/4W,5%)	10K	7-9901-103
R98	RESISTOR - CARBON	(1/4W,5%)	3.3K	7-9901-332
R99	RESISTOR - CARBON	(1/4W,5%)	91K	7-9901-913
R100	RESISTOR - CARBON	(1/4W,5%)	10K	7-9901-103
R101	RESISTOR - CARBON	(1/4W,5%)	10K	7-9901-103
R102	POTENTIOMETER (MIC. GAIN)		10K	7-00400-14
R103	RESISTOR - CARBON	(1/4W,5%)	10K	7-9901-103
R104	RESISTOR - CARBON	(1/4W,5%)	10K	7-9901-103
R105	RESISTOR - CARBON	(1/4W,5%)	10K	7-9901-103
S1	SWITCH - SLIDE			3-07862-03
S2	SWITCH - SLIDE			3-07862-03
S3	SWITCH - SLIDE			3-07862-02
S4	SWITCH - SLIDE			3-07862-03
S5	SWITCH - SLIDE			3-07862-03
TH1	THERMISTOR			7-00370-02
VR1 (-)	VOLTAGE REGULATOR (NEG)			7-00365-08
VR2 (+)	VOLTAGE REGULATOR (POS)			7-00365-07
W1 THRU W50	JUMPER - BARE WIRE			0-05032-00
Z1	IC - STEREO PRE-AMPLIFIER			3-08002-06
Z2	IC - STEREO PRE-AMPLIFIER			3-08002-06
Z3	IC - STEREO PRE-AMPLIFIER			3-08002-06
Z4	IC - STEREO PRE-AMPLIFIER			3-08002-06
Z5	IC - STEREO PRE-AMPLIFIER			3-08002-06
Z6	IC - STEREO PRE-AMPLIFIER			3-08002-06

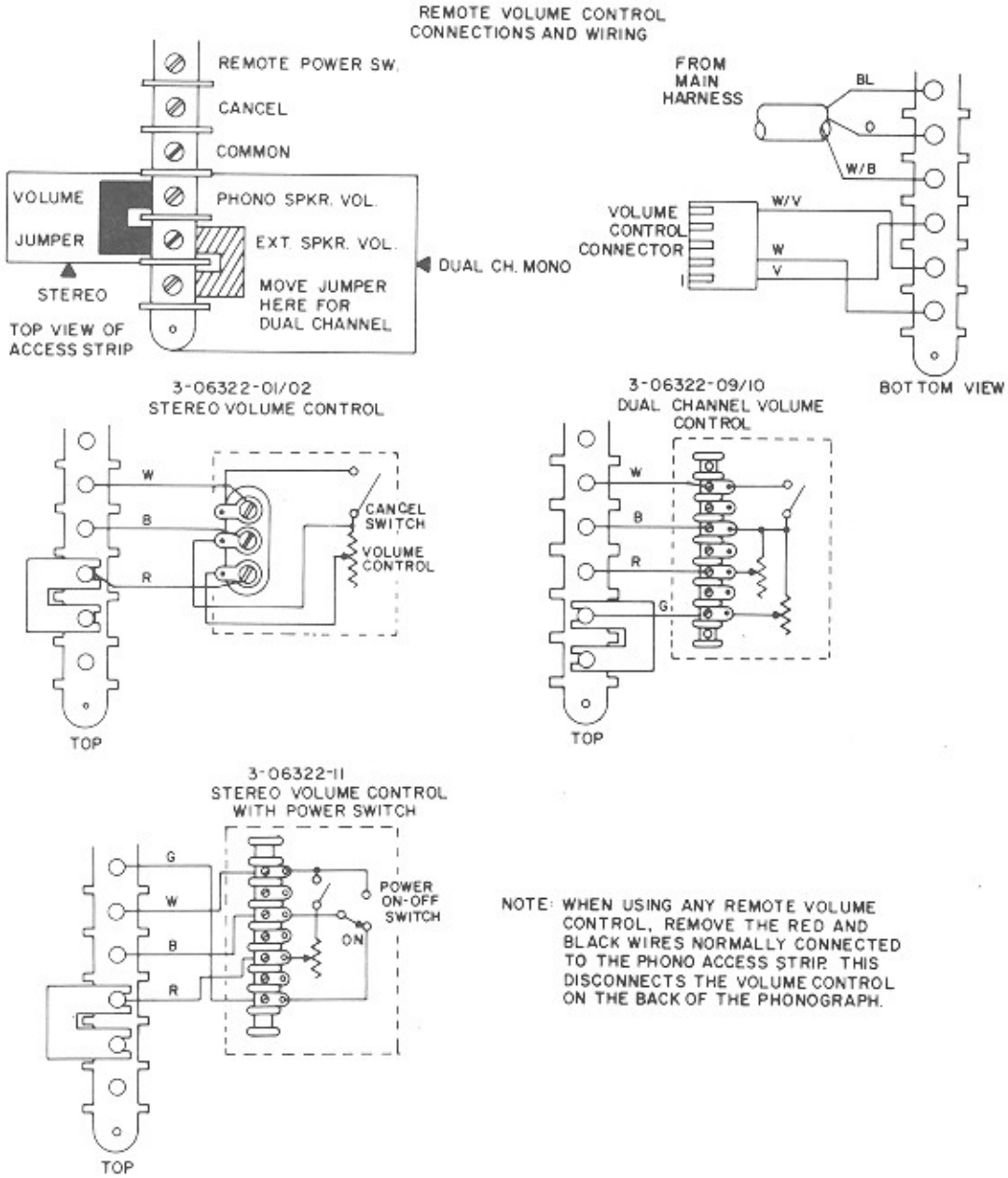

NOTE: WHEN USING ANY REMOTE VOLUME CONTROL, REMOVE THE RED AND BLACK WIRES NORMALLY CONNECTED TO THE PHONO ACCESS STRIP. THIS DISCONNECTS THE VOLUME CONTROL ON THE BACK OF THE PHONOGRAPH.

FIGURE 5-4

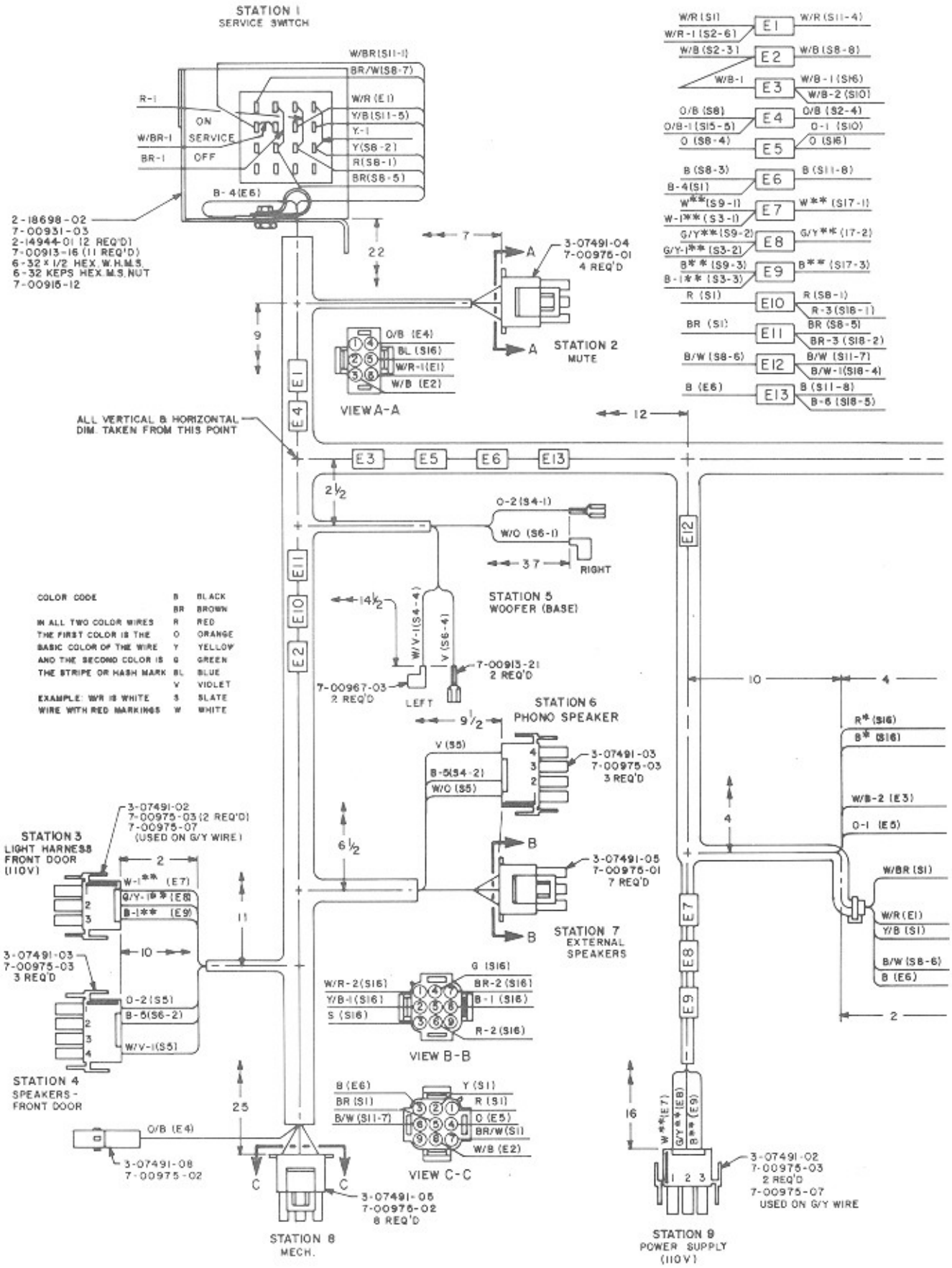
STATION 1
SERVICE SWITCH
ON
SERVICE
OFF
W/BR(S11-1)
BR/W(S8-7)
W/R (E1)
Y/B(S11-5)
Y-1
Y(S8-2)
R(S8-1)
BR(S8-5)
R-1
W/BR-1
BR-1
B-4(E6)
2-18698-02
7-00931-03
2-14944-01 (2 REQ'D)
7-00913-16 (11 REQ'D)
6-32 X 1/2 HEX. W.H.M.S.
6-32 KEPS HEX.M.S.NUT
7-00915-12
3-07491-04
7-00975-01
4 REQ'D
STATION 2
MUTE
O/B (E4)
BL (S16)
W/R-1(E1)
W/B (E2)
VIEW A-A
ALL VERTICAL & HORIZONTAL DIM. TAKEN FROM THIS POINT
E1
E2
E3
E4
E5
E6
E7
E8
E9
E10
E11
E12
E13
W/R (S1)
W/R-1 (S2-6)
W/R (S11-4)
W/B (S2-3)
W/B (S8-8)
W/B-1
W/B-1 (S16)
W/B-2 (S10)
O/B (S8)
O/B-1 (S15-5)
O/B (S2-4)
O-1 (S10)
O (S8-4)
O (S16)
B (S8-3)
B-4(S1)
B (S11-8)
W** (S9-1)
W-1** (S3-1)
W** (S17-1)
G/Y** (S9-2)
G/Y-1** (S3-2)
G/Y** (17-2)
B** (S9-3)
B-1** (S3-3)
B** (S17-3)
R (S1)
R (S8-1)
R-3 (S16-1)
BR (S1)
BR (S8-5)
BR-3 (S18-2)
B/W (S8-6)
B/W (S11-7)
B/W-1(S18-4)
B (E6)
B (S11-8)
B-6 (S18-5)
O-2 (S4-1)
W/O (S6-1)
RIGHT
STATION 5
WOOFER (BASE)
W/V-1(S4-4)
V (S6-4)
7-00913-21
2 REQ'D
7-00967-03
2 REQ'D
LEFT
STATION 6
PHONO SPEAKER
V (S5)
B-5(S4-2)
W/O (S5)
3-07491-03
7-00975-03
3 REQ'D
3-07491-05
7-00975-01
7 REQ'D
STATION 7
EXTERNAL
SPEAKERS
R* (S16)
B* (S16)
W/B-2 (E3)
O-1 (E5)
W/BR (S1)
W/R (E1)
Y/B (S1)
B/W (S8-6)
B (E6)
COLOR CODE
IN ALL TWO COLOR WIRES THE FIRST COLOR IS THE BASIC COLOR OF THE WIRE AND THE SECOND COLOR IS THE STRIPE OR HASH MARK
EXAMPLE: W/R IS WHITE WIRE WITH RED MARKINGS
B BLACK
BR BROWN
R RED
O ORANGE
Y YELLOW
G GREEN
BL BLUE
V VIOLET
S SLATE
W WHITE
3-07491-02
7-00975-03 (2 REQ'D)
7-00975-07
(USED ON G/Y WIRE)
STATION 3
LIGHT HARNESS
FRONT DOOR
(110V)
W-1** (E7)
G/Y-1** (E8)
B-1** (E9)
3-07491-03
7-00975-03
3 REQ'D
O-2 (S5)
B-5(S6-2)
W/V-1(S5)
STATION 4
SPEAKERS -
FRONT DOOR
G (S16)
W/R-2(S16)
BR-2 (S16)
Y/B-1(S16)
B-1 (S16)
S (S16)
R-2 (S16)
VIEW B-B
B (E6)
BR (S1)
B/W (S11-7)
Y (S1)
R (S1)
O (E5)
BR/W(S1)
W/B (E2)
VIEW C-C
O/B (E4)
3-07491-08
7-00975-02
3-07491-05
7-00975-02
8 REQ'D
STATION 8
MECH.
W**(E7)
G/Y**(E8)
B** (E9)
3-07491-02
7-00975-03
2 REQ'D
7-00975-07
USED ON G/Y WIRE
STATION 9
POWER SUPPLY
(110V)

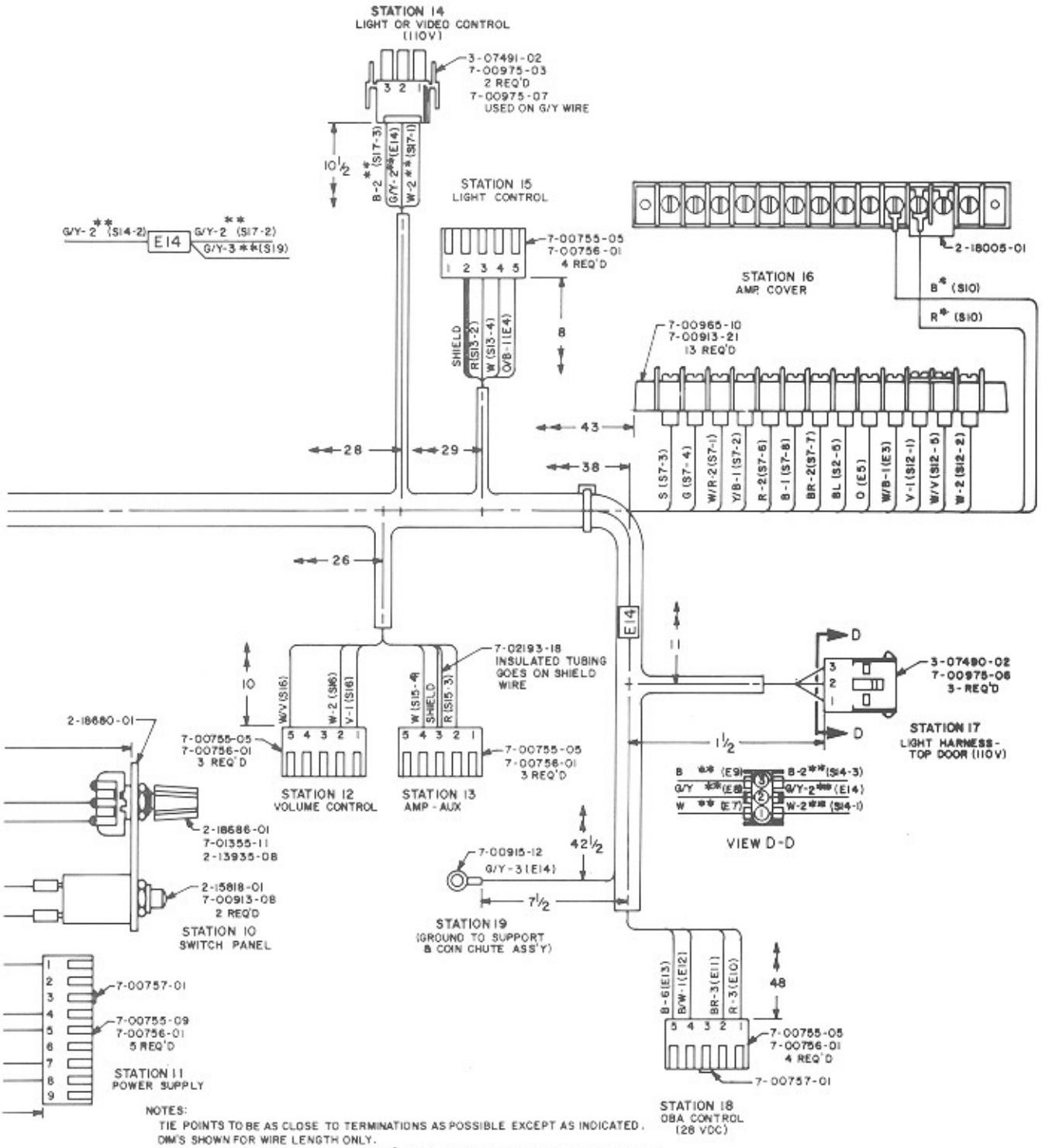

NOTES:

TIE POINTS TO BE AS CLOSE TO TERMINATIONS AS POSSIBLE EXCEPT AS INDICATED.
DIM'S SHOWN FOR WIRE LENGTH ONLY.
HARNESS TO BE SECURELY LASHED AT 4" INTERVALS WITH 7-08001-07 CABLE TIES.
WIRES MARKED ** TO BE 18 GA. 16/30 T.C. 1/32 A.W.M. 105°C PER 0-05013-00
WIRES MARKED * TO BE 24 GA. 7/32 T.C. 1/64 A.W.M. 80°C PER 0-05040-00
ALL OTHER WIRES TO BE 20 GA. 10/30 T.C. 1/64 A.W.M. 80°C PER 0-05010-00
MACHINE TERMINATIONS MUST BE CRIMPED ON INSULATION
MACHINE TERMINATIONS MUST BE CRIMPED ON WIRE TO WITHSTAND 7# PULL
WIRE LENGTH TOL. ±1/4 UNLESS NOTED
SOLDER PER SPEC. 2-01318-00
WIRES WITHOUT TERMINATIONS TO BE STRIPPED 1/4 ± 1/32

FOR WIRE & TERMINAL ASS'Y
SEE 6-09912-10/15

FOR EQUIV. ENG'G DWG SEE 6-09912-01

6-09912-01
WIRING DIAGRAM

FIGURE 5-5

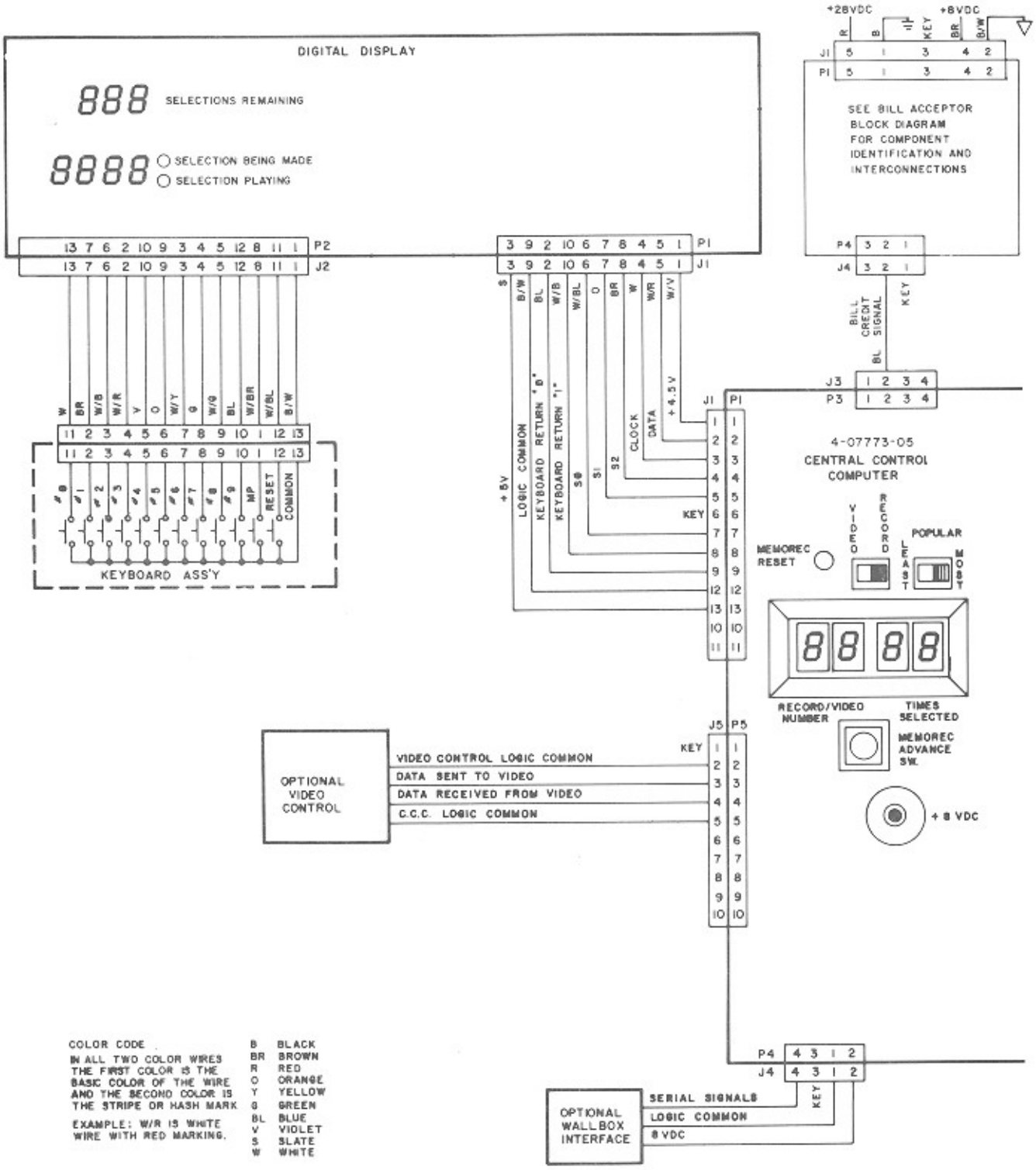

COLOR CODE

IN ALL TWO COLOR WIRES THE FIRST COLOR IS THE BASIC COLOR OF THE WIRE AND THE SECOND COLOR IS THE STRIPE OR HASH MARK

EXAMPLE: W/R IS WHITE WIRE WITH RED MARKING.

B	BLACK
BR	BROWN
R	RED
O	ORANGE
Y	YELLOW
G	GREEN
BL	BLUE
V	VIOLET
S	SLATE
W	WHITE

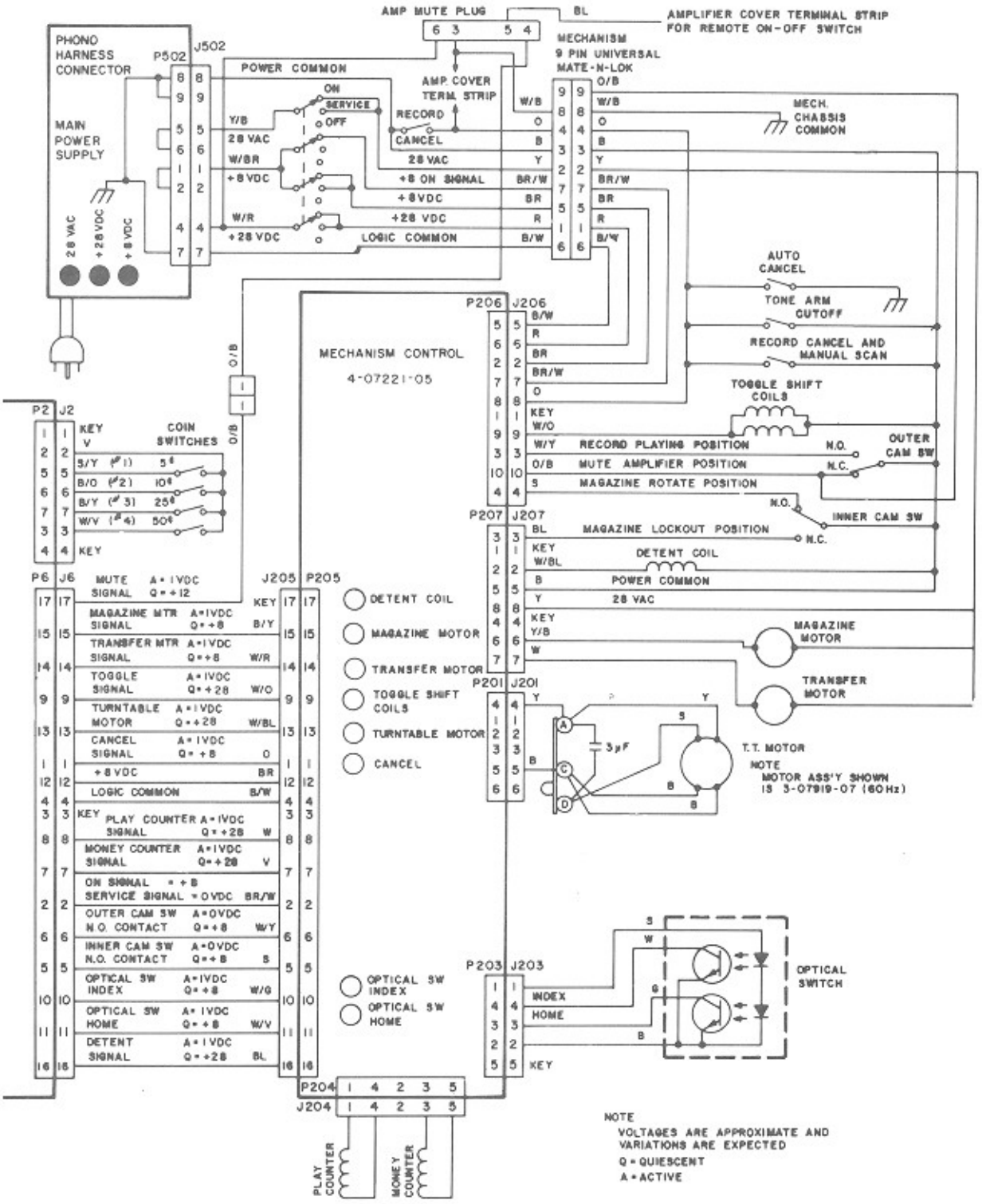

6-09900-01-Q7

R-90 PHONOGRAPH BLOCK DIAGRAM

FIGURE 5-6