SERVICE MANUAL

No. 1

SEEBURG
SYMPHONOLAS

1941 Models

7800, 7850, 8800, 9800.

J. P. SEEBURG CORPORATION
1500 DAYTON STREET • CHICAGO, U. S. A.

F 8990

Printed in U. S. A.

FOREWORD

This manual has been prepared to assist the service engineer in making any adjustments and repairs that may be necessary on 1941 Seeburg Symphonolas.

In preparing this manual every effort was made to present the material in as simple a form as possible.

Seeburg maintains a nation-wide organization of field engineers to instruct and co-operate with your service department. You will find these men up to date on all information pertaining to service. In addition, we maintain a home service department at the factory to help you and to furnish you with any technical or service information you may desire.

When requesting information by wire or letter relative to the Symphonola, please give Model and Serial Number.

When ordering a part, it is especially important to give the name of the part and the part number as well as the Model and Serial Numbers of the Unit on which it is used.

Always give a full description of the problem at hand so that we may be better able to serve you.

TABLE OF CONTENTS

Page

INSTALLATION

A. UNPACKING 1

B. CURRENT SUPPLY FOR INSTRUMENT 1

C. INSTRUCTIONS FOR INSTALLING RECORDS 1

D. NEEDLE. 2

FUNCTIONS OF COMPONENTS IN SYSTEM

1. SYMPHONOLA. 3

A. COIN SWITCH ASSEMBLY. 3

B. METHOD OF SELECTING TRAYS IN THE SYMPHONOLA CHASSIS . 3

C. MOTOR MOUNTING. 3

D. RECORD PLAYING INDICATOR DIAL 3

E. RECORD PREFERENCE METER 3

2. AMPLIFIERS. 4

A. GENERAL 4

B. FUNCTIONS OF SOCKETS AND SWITCHES 4

C. FUSES ON AMPLIFIER. 5

3. ELECTRICAL SELECTOR 5

A. GENERAL 5

B. COIN OR CREDIT CIRCUIT. 6

C. SELECTOR SWITCH 6

D. SERIES RELAY CIRCUIT. 6

E. CANCEL SOLENOID CIRCUIT 6

F. INTERLOCKING CIRCUIT. 7

G. INTERLOCKING RELAY. 7

H. NON-CHEATING CIRCUIT. 7

Page

I. ELECTRICAL COUNTER 7

J. CREDIT INDICATING CIRCUIT. 8

4. SOLENOID DRUM ASSEMBLY 8

A. GENERAL. 8

B. SELECTIONS ON SOLENOIDS. 8

C. CREDIT ON PINS 8

D. COUNTER UNIT 9

OPERATION AND MAINTENANCE

1. GENERAL. 11

A. APPEARANCE 11

B. LUBRICATION. 11

2. TONE ARM 11

A. TONE ARM WEIGHT ADJUSTMENT 11

B. PICKUP 12

3. SOUND EQUIPMENT. 12

A. AMPLIFIER. 12

B. VOLUME CONTROL 12

C. TUBES. 12

D. SPEAKERS 12

4. INSTRUCTIONS FOR INSTALLATION OF WIRED REMOTE SPEAKER. . . 13

5. ELECTRICAL SELECTOR. 14

A. CREDIT MECHANISM 14

B. SERIES RELAY 14

C. CANCEL SOLENOID. 14

D. INTERLOCKING SWITCH AND INTERLOCKING RELAY 15

Page

6. SOLENOID DRUM ASSEMBLY. 15

A. ACCESS TO SOLENOID DRUM ASSEMBLY. 15

B. SELECTION SOLENOIDS 15

C. MOTOR CONTROL RELAY 16

D. ALIGHMENT OF REAR VERTICAL HELIX. 16

E. PIN CANCEL RELAY. 16

F. SELECTOR DISC AND STOP PIN ADJUSTMENT 17

G. SELECTOR SHAFT ADJUSTMENT 17

H. COUNTER UNIT. 17

I. COUNTER RELAY 17

SERVICE NOTES

1. PROPER HUMBER OF CREDITS FAIL TO REGISTER IN THE MECHANICAL SELECTOR. 19

A. MAGAZINE RELAY DOES NOT RESPOND TO COIN 19

B. TOO FEW PLAYS FOR THE AMOUNT OF COINS INSERTED. . . . 19

C. TOO MANY PLAYS FOR THE AMOUNT OF COINS INSERTED . . . 19

2. MOTOR FAILURE 19

A. MOTOR DOES NOT START. 19

B. MOTOR DOES NOT START UNTIL COUPLING IS DISCONNECTED AND MOTOR IS SPUN WITH FINGERS. 19

C. STARTING WINDING CUTS IN AND OUT CONTINUOUSLY 20

D. MOTOR FUSE BLOWS. 20

3. RECORD TRAY SELECTOR PULLING OUT TWO OR MORE TRAYS AT ONE TIME. 20

4. TIMING OF MECHANICAL SELECTOR WITH REAR HELIX 20

5. TURNTABLE DOES NOT FUNCTION PROPERLY. 21

A. TURNTABLE FAILS TO RISE TO PLAYING POSITION 21

Page

B. TURNTABLE DOES NOT ROTATE WHEN IN PLAYING POSITION. . 21

6. IMPROPER ADVANCE OF REAR HELIX. 22

A. SELECTOR MECHANISM BINDS. 22

B. FRONT HELIX PINS CAUGHT ON SELECTOR LEVER TOOTH . . . 22

C. IMPROPER TIMING OF REAR HELIX 22

D. HELIX LOCK ROLLER STOPS ON SPROCKET TOOTH 22

7. CHANGING MECHANISM NOT SET IN OPERATION AT END OF RECORD PLAY. 22

A. WORN OR DAMAGED STOP GROOVE 22

B. BINDING OF TONE ARM SUPPORT ROD 22

C. INCORRECT CUT-OFF ADJUSTMENTS 23

D. BINDING OF TRANSMISSION WORM SHAFT. 23

E. BINDING OF TRIP LEVER 23

8. NEEDLE DOES NOT ENTER RECORD GROOVE PROPERLY. 23

A. ALIGNMENT OF NEEDLE WITH EDGE OF RECORD 23

B. NEEDLE FAILS TO ENTER GROOVE. 23

9. MOTOR CARRY OVER SWITCH ADJUSTMENT. 24

A. CONTACT PRESSURE. 24

B. DEGREE OF CONTACT OPENING 24

C. TIMING OF MOTOR CARRY OVER SWITCH 24

10. WARBLE OR TREMOLO EFFECTS IN THE MUSIC. 24

11. SLOW RECORD START 25

12. ADJUSTMENT OF SYMPHONOLA CLUTCH THROWOUT LEVERS 25

13. SOUND EQUIPMENT 26

A. SOUND EQUIPMENT APPARENTLY "DEAD" 26

Page

B. DISTORTED TONE QUALITY. 26

C. MOTOR HUM 27

D. HUM DURING WARMUP PERIOD. 27

E. MICROPHONIC TUBES 27

14. PROPER NUMBER OF CREDITS FAIL TO REGISTER IN THE ELECTRICAL SELECTOR. 27

A. CREDIT MAGNET DOES NOT RESPOND TO COIN. 27

B. COIN SWITCH CONTACTS NOT PROPERLY ADJUSTED. 28

C. RATCHET WHEEL ESCAPEMENT LEVER TOO FAR FROM CREDIT MAGNET. 28

D. RATCHET ESCAPEMENT LEVER ALLOWS TOO MANY PLAYS FOR COINS INSERTED. 28

E. RATCHET WHEEL BINDING 28

15. ELECTRICAL SELECTOR MAKES NO RESPONSE WHEN BUTTONS ARE PRESSED 28

A. GENERAL CAUSE 28

B. CREDIT SWITCH CONTACTS. 29

C. INTERLOCKING RELAY CONTACTS 29

16. CREDIT DOES NOT CANCEL ON ELECTRICAL SELECTOR 29

A. SERIES RELAY CONTACTS 29

B. CREDIT CANCEL SOLENOID. 29

C. RATCHET WHEEL ESCAPEMENT LEVER. 29

D. SOLENOID GUIDE STOP BRACKET 29

E. RATCHET WHEEL STOP BRACKET INTERFERES 29

17. MOTOR DOES NOT START WHEN A SELECTION IS MADE ON THE ELECTRICAL SELECTOR. 30

A. GENERAL 30

Page

B. SOLENOID PLUNGER DOES NOT PUSH UP 30

C. MOTOR CONTROL RELAY DOES NOT OPERATE PROPERLY 30

D. MOTOR CONTROL CIRCUIT 30

18. SELECTIONS FAIL TO REGISTER ON SOLENOID DRUM ASSEMBLY. . . 31

19. ADJUSTMENTS OF 5¢-10¢-25¢ SLUG REJECTOR 31

A. LEVELING. 31

B. 25¢ ADJUSTMENT. 31

C. 10¢ ADJUSTMENT. 31

D. MISCELLANEOUS 31

CIRCUIT DIAGRAMS AND DRAWINGS AND PARTS PRICE LIST

Fig. 1 - Cabinet Wiring Diagram for Models 8800 and 9800. . . . 33
Fig. 2 - Cabinet Wiring Diagram for Model 7850. 34
Fig. 3 - Cabinet Wiring Diagram for Model 7800. 35
Fig. 4 - Symphonola Chassis - Rear View (Cutaway) 36,37
Fig. 5 - Front View of Mechanical Symphonola Chassis. 38,39
Fig. 6 - Symphonola Chassis - Rear View 40,41
Fig. 7 - Symphonola Chassis - End View. 44,45
Fig. 8 - Symphonola Chassis - Front View. 47
Fig. 9 - Schematic Diagram for Type 825-10 Amplifier. 48
Fig. 10 - Front View of Type 825-10 Amplifier. 50
Fig. 11 - Bottom View of Type 825-10 Amplifier 51
Fig. 12 - Schematic Diagram for Type 825-5 Amplifier 52
Fig. 13 - Front View of Type 825-5 Amplifier 54
Fig. 14 - Bottom View of Type 825-5 Amplifier. 55
Fig. 15 - Schematic Diagram for Type 615-3 Amplifier 56
Fig. 16 - Front View of Type 615-3 Amplifier 58
Fig. 17 - Bottom View of Type 615-3 Amplifier. 59
Fig. 18 - Schematic Diagram Electrical Selector Type B 60
Fig. 19 - Schematic Diagram Electrical Selector Type C 61
Fig. 20 - Schematic Diagram Series Relay (Selection) Circuit . . 62
Fig. 21 - Schematic Diagram Credit Circuit 63
Fig. 22 - Electrical Selector Type ES-5Z. 64
Fig. 23 - Switch Assembly Type SA-6Z 65
Fig. 24 - Relay Box Type RB-6Z 66
Fig. 25 - Solenoid Drum Assembly Type SD20-7Z (Top View) 67
Fig. 26 - Solenoid Drum Assembly Type SD20-7Z (Bottom View). . . 68
Fig. 27 - Schematic Diagram Motor Control Circuit. 69
Fig. 28 - Schematic Diagram Solenoid Drum Type SD20-7Z 70

Page

Fig. 29 - Coin Mechanism Assembly. 71
Fig. 30 - Slug Rejector. 72
Fig. 31 - Coin Tripper Assembly. 73
Fig. 32 - Model 7800 Cabinet Front View. 74
Fig. 33 - Model 7800 Cabinet (Front View) Door Open. 75
Fig. 34 - Model 7800 Cabinet (Rear View) 76
Fig. 35 - Model 7850 Cabinet (Front View). 77
Fig. 36 - Model 7850 Cabinet (Front View) Door Open. 78
Fig. 37 - Model 7850 Cabinet (Rear View) 79
Fig. 38 - Model 8800 Cabinet (Front View). 80
Fig. 39 - Model 9800 Cabinet (Front View). 81
Fig. 40 - Hi-Tone Cabinet Assembly (Rear View) 82
Fig. 41 - Hi-Tone Cabinet Accessories (Upper Rear View). 83
Fig. 42 - Hi-Tone Cabinet Accessories (Lower Rear View). 84
Fig. 43 - Hi-Tone Cabinet Accessories (Front Door Open). 85
Fig. 44 - Front Door Lighting Assembly 86

INSTALLATION

A. UNPACKING

We advise that the packing case be carefully examined before unboxing the instrument, and should there be any indication of concealed damages, the transportation company should be notified. When unpacking we advise the following procedure:

(1) Remove the screws holding the back of the packing case to the sides.

(2) Carefully remove the instrument from the packing box.

(3) Open the doors in the back by means of the keys which are contained in cloth bag tacked on the back.

(4) Remove the fastening from the tone arm to the tone arm post bracket.

(5) Remove the shipping block holding the record trays, and the shipping brace and wooden block which hold the motor rigidly for transportation purposes. It is advisable to keep these braces in the bottom of the instrument and use them again when transporting the machine.

(6) Remove the two wood screws and blocks holding the brackets on the bottom of the record changer mechanism.

(7) Remove the four wing nuts in each corner of the chassis.

NOTE: The wing nuts should be removed so that the chassis may be resiliently suspended in the spring mounting. This is absolutely essential in order that the best tone quality may be obtained. When the instrument is again to be moved, these wing nuts should be replaced and tightened down so that they hold the chassis rigidly.

B. CURRENT SUPPLY FOR INSTRUMENT

On the back of each instrument will be found a name plate which gives the type of current upon which the instrument is designed to operate. If in doubt as to whether or not the type of current at the location is correct, look at the house watt meter or call the local power company for this information.

C. INSTRUCTIONS FOR INSTALLING RECORDS

A set of record support discs will be found fastened inside of the cabinet. One disc should be used as a support underneath each record. It is not necessary to remove the record support discs from the trays when records are being changed, but it is important to make certain that both the discs and records are centered properly in the record trays.

When installing or replacing the records in the instrument, it

is best to install or replace the record in No. 20 tray first. Install or change the balance of the records starting with No. 1 tray and work down through the stack of record trays until all the records are in their respective trays. As each record is put in its tray the title for that particular record should be put in its proper place in the program holder.

After all trays have been filled they must be returned to their original position by hand excepting No. 20 which should remain over the turntable.

D. NEEDLE

The Symphonola Pickup is designed to use any standard phonograph needle, however, we recommend the type supplied with the instrument. The needle should be installed having the flat part of the needle aligned parallel to the grooves in the record.

FUNCTIONS OF COMPONENTS IN SYSTEM

I. SYMPHONOLA

A. COIN SWITCH ASSEMBLY

When a 25¢ coin enters the runway of the coin switch assembly (Fig. 29-B) it successively moves the levers of the coin switches Nos. 1, 2, 3, 4 and 5 downward, making a single contact for each lever moved. Each contact made should store a play in the play magazine.

Fig. 29-A is a front view of the coin switch assembly showing the 5¢ and 10¢ runway. When a 5¢ coin enters, it travels down the right hand runway, moving the lever on No. 4 coin switch downward, making a single contact. This should store one play in the play magazine.

When a 10¢ coin enters, it travels down the left hand runway, moving No. 1 and No. 5 coin switch levers downward, making two contacts. This should store two plays in the play magazine.

B. METHOD OF SELECTING TRAYS IN THE SYMPHONOLA CHASSIS

When a selection is made one tray only should be pulled out at a time. The trays are withdrawn by means of the selector slide pawls (Fig. 6H, No. 1183) of which there are twenty. One of these slide pawls engages a lug on a tray (No. 1110) when one of the rollers (No. 1223) of the Helix (No. 3201) push against the selector slide pawl spring (No. 1184) thereby moving the pawl (No. 1183) inward, as shown in Fig. 6H.

The selector pawls (Fig. 6H, No. 1183) are urged inward at all times by the action of the selector pawl springs (No. 1184). But when the selector slide (No. 1180) is in position with the selector pawls opposite the lugs as shown in Fig. 6G, then the action of the selector pawl lift springs (No. 1113) is stronger and overcomes the pressure of the selector pawl springs (No. 1184) and prevents the selector pawls from engaging the lugs on the trays (Fig. 6G). That is, with the exception of that particular pawl which is pressed in through the action of the helix roller against the selector pawl spring (Fig. 6H, No. 1184).

C. MOTOR MOUNTING

The motor is resiliently mounted on steel springs (No. 1841 as shown in Fig. 5A) in order to prevent vibration from the mtor being transmitted through the chassis and reaching the pickup.

D. RECORD PLAYING INDICATOR DIAL

The "record playing" indicator dial is located just back of the cabinet escutcheon and is illuminated by the same lamps that illuminate the program holder. It is timed with the selector in such a manner that is always indicates the number being played. On the hi-tone models 8800 and 9800 a single lamp illuminates both the record playing dial, the credit dial and the front vertical plastic.

E. RECORD PREFERENCE METER

A play meter indicating the number of plays obtained from each record is conveniently located and attached underneath the front shelf below the tone arm post. An individual dial for each record turns one notch

clockwise as its corresponding record comes to playing position. A reading can be taken by first allowing the Symphonola to come to a stop after it has played No. 20 record, then lifting the cabinet lid and looking at the individual escutcheon dials under the shelf. To reset the dials, turn them counter-clockwise by hand until they reach the stop position. On models 8800 and 9800 it will be necessary to open the front door and turn on light by means of switch on right side of cabinet before playmeter can be read.

2. AMPLIFIERS

A. GENERAL

The amplifier in the 1941 Symphonola is the source of power for all equipment located in the cabinet and also reproduces the sound recorded on a record. The power is supplied to various units by means of a plug and socket arrangement in which no plug can be put into the wrong socket. The distribution of power from the amplifier can best be taken up by describing the functions of each socket located on the front of the amplifier panel.

B. FUNCTIONS OF SOCKETS AND SWITCHES

The power to all units in the Symphonola is controlled by the main switch (Fig. 11, Item 1; Fig. 14, Item 1; Fig. 17, Item 1). When this switch is in the down position, the Symphonola is inoperative. With the switch in the up position, standby power is supplied and the instrument is ready for operation.

The octal socket (Fig. 10, Item 3; Fig. 13, Item 3; Fig. 16, Item 3) supplies 25 volts to the solenoid drum from which point the 25 volts supply is distributed to the various relays and coils on the solenoid drum and electrical selector. This socket also has two lugs which are connected to the contacts of the motor control relay and they carry the power to the motor and amplifier when these contacts are closed. In addition, this socket provides the power to operate the counter unit located on the solenoid drum.

It will be noted that there is another octal socket (Fig. 10, Item 2; Fig. 13, Item 2; Fig. 16, Item 2). This socket supplies the power to a type T-32 transmitter when one is used. From the schematic diagrams it will be seen that these two octal sockets (Fig. 9, Items M-21 and M-22; Fig. 12, Items M-21 and M22; Fig. 15, Items M-18 and M-19) are wired in parallel so that the solenoid drum and transmitter plugs can be interchanged without any harm resulting. The small 4 contact socket (Fig. 10, Item 1; Fig. 13, Item 1; Fig. 16, Item 1) receives the R.F. output from a type T-32 transmitter and carries the output to the A-C line.

The 9 contact socket (Fig. 10, Item 4; Fig. 13, Item 4; Fig. 16, Item 4) is the source of power for any remote control equipment that may be added to the Symphonola. The 2 contact outlet (Fig. 10, Item 5; Fig. 13, Item 5; Fig. 16, Item 5) supplies power to motor when the motor control relay contacts are closed.

The small 2 contact polarized socket (Fig. 10, Item 7; Fig. 13, Item 7) supplies 6 volts for the electrical selector and upper pilaster lights on the Model 8800 and 9800 Symphonolas. These lights are on when the main switch (Fig. 11, Item 1; Fig. 14, Item 1) is in the "on" position.

The 4 contact socket (Fig. 10, Item 6; Fig. 13, Item 6; Fig. 16, Item 6) supplies 117 volts to the primary of the lighting transformer (Fig. 1, Item 17; Fig. 2, Item 17; Fig. 3, Item 13). The power to this transformer is controlled by the light switch (Fig. 11, Item 2; Fig. 14, Item 2; Fig. 17, Item 2). When this switch is in the down position, all lights energized by the lighting transformer are on continuously. With the switch in the middle position, the above lights are off at all times. With the switch in the up position, these lights are on only when the motor control relay contacts are closed. The 4 contact socket (Fig. 16, Item 6) on Models 7800 and 7850 also supplies 117 volts to the program lights. These lights are on as long as the main switch (Fig. 17, Item 1) is in the "on" position.

The small 5 contact socket (Fig. 16, Item 7) on Model 7800 supplies 25 volts to the magazine magnet through the coin switches.

C. FUSES ON AMPLIFIER

There are two fuse receptacles (Fig. 10, Items 14 and 16; Fig. 13, Items 14 and 16; Fig. 16, Items 14 and 16) on the amplifier. The fuse (Fig. 10, Item 15; Fig. 13, Item 15; Fig. 16, Item 15) in the covered receptacle (Fig. 10, Item 14; Fig. 13, Item 14; Fig. 16, Item 14) is a 2-1/2 ampere cartridge type light fuse. The fuse (Fig. 10, Item 17; Fig. 13, Item 17; Fig. 16, Item 17) in the screw type socket (Fig. 10, Item 16; Fig. 13, Item 16; Fig. 16, Item 16) is a 2-1/2 ampere non-tamperable type fuse for the Symphonola motor. It is very important that a blown fuse be replaced with one of the correct value.

3. ELECTRICAL SELECTOR

A. GENERAL

The Electrical Selector supplements the mechanical selector; it is an electrical device located on the front of the Symphonola at which selections are made. Two models of the Electrical Selector differing in mechanical arrangement of parts are discussed in this manual. One is the type B selector which is almost identical to the 1940 selector except the operating voltage is 25 volts. The other is the type C selector which has the same electrical characteristics as the type B but differs in that it consists of two components -- the SA-6Z Switch Assembly (Fig. 23) and the RB-6Z Relay Box (Fig. 24) -- which are interconnected by means of a Selector Cable.

The Electrical Selector works in conjunction with the Solenoid Drum (Fig. 25) to control the rear helix of the Symphonola Chassis and effect the desired selection. The primary functions of the mechanism in the electrical selector are (1)

to establish credit in the selector mechanism, (2) convey selections to and establish them on the solenoid drum and (3) to cancel the credit established in the electrical selector when a selection is made. In addition, there are some secondary functions performed in the electrical selector which are necessary to prevent cheating and possible mistreatment or overloading of parts designed for momentary duty only.

The function of the components in the electrical selector will be discussed by considering the circuits involved. To simplify the following discussion, reference will be made almost entirely to the Type C selector. The explanations may be applied unchanged to analysis of the Type B selector operation.

B. COIN OR CREDIT CIRCUIT

The Coin Switch Assembly in the Symphonola operates in conjunction with the credit magnet (Fig. 24, Item 17; Fig. 19, Item M4) of the Electrical Selector to establish credit on the ratchet wheel (Fig. 24, Item 9). Each time a coin closes one of the contacts in the Coin Switch Assembly, the ratchet escapement lever (Fig. 24, Item 13) is operated by the credit magnet and allows one tooth on the ratchet wheel to escape, rotating the ratchet wheel through an angle equivalent to one tooth.

C. SELECTOR SWITCH

The selector switches permit the operator to make the selection desired. It is so constructed that it is impossible to excite two selection solenoids at once. There are two fundamental circuits through the selector switches as shown on the Schematic diagram (Fig. 19); these are the red circuit and the black circuit as labeled. The red circuit is completed to the solenoid drum when a selector button is pressed. The black circuit permits the interlocking relay to function after the credit cancel solenoid has operated. The relationship of the switch segments is such that the black circuit is closed before the red circuit is completed. The red circuit is not closed but is left open when two or more selector buttons are pushed simultaneously. A study of the Schematic Diagram (Fig. 19) will show how this happens. The purpose and the importance of this will be explained as other parts of the electrical selector are discussed.

D. SERIES RELAY CIRCUIT

When the credit switch contacts of the credit switch (Fig. 24, Item 24; Fig. 19, Item M3) are closed and the customer pushes a selector button, the series circuit is completed through the series relay to the corresponding selection solenoid on the solenoid drum. The credit circuit contacts are those nearest the front of the Credit Switch. When the series circuit is completed, the series relay contacts close and a selector pin is pushed up on the solenoid drum.

E. CANCEL SOLENOID CIRCUIT

The cancel solenoid circuit is completed through the cancel solenoid (Fig. 24, Item 2; Fig. 19, Item M1) when the large con-

tacts of the series relay close. The series relay thus energizes the cancel solenoid permitting a credit to be cancelled from the ratchet wheel.

F. INTERLOCKING CIRCUIT

When a selector button is pressed, the interlocking circuit (Fig. 19) is closed through one of the switch segments of the selector switch. After the cancel solenoid has travelled through the major portion of its stroke, it closes the contacts of the interlocking switch (Fig. 19, Item M6) operating the interlocking relay (Fig. 19, Item M7), which opens the series relay circuit and locks itself up by means of maintaining contacts.

G. INTERLOCKING RELAY

After the interlocking switch operates, operating the interlocking relay, the normally open or maintaining contacts close and maintain the circuit through the interlocking relay even though the interlocking switch contacts open.

When the normally closed contacts operate they break the circuit through the series relay (Fig. 19, Item M1). The series relay then drops out, the credit canceling solenoid is de-energized; and the interlocking switch opens. As long as the selector button is held down, the interlocking relay will be energized and the starting relay and the cancel solenoid will be in their normal position ready for another selection to be made. However, before another selection can be made, the interlocking relay must first return to its normal position allowing the series relay circuit to close. This means that the operator cannot make another selection until he first removes his fingers from the selector button.

H. NON-CHEATING CIRCUIT

In order to prevent cheating by tapping the selector buttons lightly, a non-cheating circuit is included in the electrical selector. This circuit increases the period of time during which the series relay is energized. The circuit is in series with the 30 ohm Candohm resistor (Fig. 19, Item M8). When the push button begins to travel backward, the interlocking circuit is broken some time after the series relay circuit is broken. If the series circuit is completed momentarily, energizing the series relay, the left hand contacts on the series relay will close and permit current to travel through the series relay by way of the non-cheating circuit until the interlocking circuit is broken at the selector switch. This current pulse is sufficient to operate the series relay long enough to cause a cancellation of credit. To further insure functioning of the non-cheating circuit when the push button selector switch is manipulated, contact gap A (Fig. 19) has been included. It closes on the initial motion of the cancel solenoid plunger and connects series relay small contacts directly to the energy source.

I. ELECTRICAL COUNTER

To maintain proper operation of the electrical counter (Fig. 26, Item 7) on cancellation of the last credit, a circuit consisting of a resistor

(Fig. 19, Item M9) and the contact set C (Fig. 19) is used. Its function is to prolong the energy pulse through counter relay (Fig. 26, Item 8) when Credit Switch contacts D (Fig. 19) break. The register is merely a means of limiting current through the circuit.

J. CREDIT INDICATING CIRCUIT

The credit on the ratchet wheel in the Electrical Selector is indicated to the customer by means of the credit indicating dial (Fig. 22, Item 34). This dial is visible through the small window in the front escutcheon. The printed instructions on the front escutcheon explain this credit in terms of the number of selections the customer may make. The printing is not visible until credit is established and is illuminated with white light.

The type B selector includes a credit light switch which turns on the indicating lamps (Fig. 22, Item 53).

4. SOLENOID DRUM ASSEMBLY

A. GENERAL

The Solenoid Drum Assembly (Fig. 25) works in conjunction with the Electrical Selector (Fig. 22 or Fig. 23 and 24) and the Symphonola Chassis (Fig. 40). The Solenoid Drum assembly stores both selections and credit simultaneously. Means is also provided to cancel off selections as they are played from the Symphonola Chassis. The function of the component parts can best be taken up by a study of the individual functions performed.

B. SELECTIONS ON SOLENOIDS

When a selection is made in the Electrical Selector, a pulse of current travels to the Sole-Drum Assembly (Fig. 25) through one of the selector solenoids (Fig. 25, Item 11; Fig. 28, Item M1) and pushes up the plunger and selector stop pin of that solenoid. The rotating selector disc (Fig. 25, Item 8) on the solenoid drum has a stop (Fig. 40, Item 7) which engages the selector stop pin (Fig. 25, Item 10). The coupling shaft couples the rotating selector disc to the rear helix of the Symphonola Chassis and selects the corre-responding record tray. After the proper record tray has been selected, the selection cancel switch (Fig. 25, Item 16) is closed and the selector stop pin is pushed down to its original position by means of the pin cancel relay (Fig. 25, Item 6).

C. CREDIT ON PINS

When a solenoid plunger is pushed up, credit is established on the solenoid drum. Contact is made between the plunger contact spring (Fig. 25, Item 13) and the grooved metal contact on the lower portion of the solenoid plunger assembly (Fig. 25, Item 12). This completes a circuit (Fig. 27) operating the motor control relay (Fig. 27, Item 12).

The motor control relay (Fig. 27, Item 12) contacts operate the Symphonola motor. These contacts close when a selector pin is up and do not open again until after the last selection

has been played and the turntable has returned to its lowest position. The solenoid plunger and selector pin are pushed down before the record has moved to the playing position, but the motor carry-over switch (Fig. 25, Item 17; Fig. 27, Item F-12) located on the rear of the Symphonola Chassis, keeps the motor control relay energized until the record has been played.

D. COUNTER UNIT

The Solenoid Drum type SD20-7Z is equipped with an electrically operated counter that operates every time a selection is made from either the electrical selector or from a remote control box. If one number is selected twice, the counter will register two selections. It operates every time a selecting pulse travels through any of the selector solenoids.

The counter unit is located inside the Solenoid Drum sub panel, and only the numerals are visable through the window in the side of the sub panel. To prevent tampering with the counter unit, the sub panel bottom plate is sealed with a small lead and wire seal, making it impossible to open the Solenoid Drum sub panel without breaking the seal.

Fig. No. 25 is a photograph of the Solenoid Drum SD20-7Z showing its assembly and miscellaneous parts and Fig. No. 27 is a Schematic Wiring diagram showing its electrical circuits.

OPERATION AND MAINTENANCE

1. GENERAL

A. APPEARANCE

It is important that the general upkeep and the good appearance of the instrument be maintained. A careful selection of good quality records appropriate for the location should be made. Typewritten or printed title slips should be used at all times. This not only adds to the attractiveness of the instrument, but increases its earnings.

B. LUBRICATION

Oil the gears occasionally using an automobile oil having a viscosity of SAE-10. Oil all friction points, such as the high speed transmission bearings and the selector feed clutch plates on the toothed rack. We recommend this oil inasmuch as ordinary light sewing machine oil on the turntable shaft, the transmission shaft, or the transmission bearings has not enough body to retain proper lubrication. The slide grooves may be oiled sparingly should the record carriers become binding or sticky. If grease has been used in the slide grooves or the grooves become gritty or gummy, the record carrier may bind. They should be washed thoroughly with a light grade of good quality lubricating oil. Wipe clean and re-oil sparingly. DO NOT USE VASELINE OR ANY GREASE IN THE SLIDE GROOVES AS IT WILL GUM UP QUICKLY CAUSING A HEAVY LOAD ON THE SELECTOR SLIDE PLATE.

2. TONE ARM

A. TONE ARM WEIGHT ADJUSTMENT

On Model 7800 the weight of the tone arm at the needle with the needle just barely clearing the record should be approximately 3.5 ounces.

On Models 7850, 8800 and 9800, which use tone arm F-3110, the weight when tested as above should be 2.5 ounces.

When using the weight scale in Fig. 5, the indicator pointer of the scale should be directly opposite the needle screw just as the needle is leaving the grooves of the record.

If a weight test is made while the instrument is playing, it is easy to determine just when the needle starts lifting out of the grooves.

It is best to make all weight tests near the start of a record.

On Model 7800 correct weight may be obtained by bending the flat spring underneath the tone arm upward or downward to decrease or increase the weight.

On Models 7850, 8800 and 9800 the correct weight may be obtained by turning the screw (located in the top and approximate center of the tone arm) in to decrease the weight, and out to increase the weight.

B. PICKUP

Two types of pickups (F-3121 and F-3126) are used interchangeably in the tone arm (Fig. 8). When the pickup becomes defective, it is recommended that the entire unit be returned for a factory rebuilt pickup.

The pickup unit is a scientific device. Its characteristics are determined by its construction and the materials used. To dismantle the unit will reduce its magnetism, change the damping and introduce maladjustments which cannot be corrected. Such a unit will be of questionable quality and inferior to a factory rebuilt pickup which can be obtained on exchange for a nominal charge.

3. SOUND EQUIPMENT

A. AMPLIFIER

The amplifiers used in all of the 1941 model Symphonolas are designed to operate at any volume set by the control from very low to full output without distortion or bad tone quality. All the amplifiers are equipped with dual tone compensators; one compensator (Fig. 10, Item 19; Fig. 13, Item 19; Fig. 16, Item 19) is used for modifying the high frequency or treble notes and the other (Fig. 10, Item 21; Fig. 13, Item 21; Fig. 16, Item 21) is used for modifying the lower frequencies or bass notes. Care should be used in adjusting these because by subduing either the high notes or the low notes to too great an extent, the tone quality and faithful reproduction of music will be greatly impaired.

B. VOLUME CONTROL

If the volume control (Fig. 11, Item 3; Fig. 14, Item 3; Fig. 17, Item 3), which is located on the back of the amplifier panel, should cause the volume to jump to a high level when turned slightly and then go down again when turned slightly farther, the control is defective and should be replaced.

C. TUBES

When installing or replacing tubes, special attention must be paid to the designated number on each tube. The number on the tube must correspond to the number on the tube socket. Each tube must be inserted in its proper tube socket; failure to do so may result in damage to the tube. Make certain that each tube is firmly pushed into its socket to make proper contact.

D. SPEAKERS

The speakers (Fig. 1, Item 4; Fig. 2, Item 4; Fig. 3, Item 4) used in each model Symphonola are designed and matched to operate with the other components which make up the sound equipment for that particular instrument and are built to withstand the full volume of the amplifier without injury. Care should be taken not to allow dirt to enter the speakers as this may cause a rattle or bad reproduction of music.

4. INSTRUCTIONS FOR INSTALLATION OF WIRED REMOTE SPEAKER

These instructions concern the remote speaker and the speaker volume control box for 1941 Symphonolas. A total of three speakers, including the speaker in the Symphonola, may be connected to these Symphonolas.

The speaker control box is mounted on the inside of the extra speaker cabinet for packing purposes only. It should be removed and mounted on the bottom of the amplifier shelf with the control key 2-7/8" from the left hand wall (when viewing the Symphonola from the rear) on Models 8800 and 9800. On Models 7800 and 7850, it should be mounted on the right hand wall (when viewing the Symphonola from the rear) with the control key 6-1/2" below the top of the mechanism mounting shelf. A plate which covers the hole for the control key must be removed for access to the control key of the speaker control box.

When connecting the speaker control box for use with the remote speaker, the following procedure is advised:

1. Remove the green dummy plug (Fig. 10, Item 10; Fig. 13, Item 10; Fig. 16, Item 10) from the amplifier.

2. Insert the plug from the speaker control box into either one of the two 7-prong speaker sockets (Fig. 10, Items 11 and 12; Fig. 13, Items 11 and 12; Fig. 16, Items 11 and 12).

3. Insert the plug from the remote speaker into either one of the 7-prong sockets in the control box.

4. Set the link on the speaker impedance matching panel (Fig. 10, Item 13; Fig. 13, Item 13; Fig. 16, Item 13) to correspond with the TOTAL number of speakers in use.

There are six positions on the key switch control in the speaker control box. When the control is in the full counter-clockwise position, the greatest amount of speaker energy reaches the Symphonola speaker. When the control is turned to the full clockwise position, the external remote speakers receive the greatest amount of energy. When the control is in the third position, turning in a clockwise position from the left, the energy reaching the Symphonola and external speakers is approximately the same.

The regular instrument volume control (Fig. 11, Item 3; Fig. 14, Item 3; Fig. 17, Item 3) is used to set the overall volume level desired.

5. ELECTRICAL SELECTOR

A. CREDIT MECHANISM

The credit magnet (Fig. 24, Item 17) which operates the ratchet escapement lever (Fig. 24, Item 13) should have a resistance of 10.5 ohms per coil or 21 ohms for two coils; if this is not the true resistance, the credit magnet may be defective.

The escapement lever should engage the tooth of the ratchet wheel (Fig. 24, Item 9) at least 1/32". Adjustment can be made by loosening the two screws which hold the ratchet escapement stop bracket (Fig. 24, Item 16) and tightening them again with the bracket at the proper place. The ratchet escapement stop bracket should be bent at such an angle that it strikes the ratchet escapement lever at the lower edge of the lever. This will help prevent bouncing of the escapement lever and insure cancellation of credit. The relative position of the credit magnet to the escapement lever should be such that when the escapement lever is against the credit magnet pole face, the ratchet wheel tooth which has just escaped will clear the escapement lever by approximately 1/32".

When credit is established on the ratchet wheel the contacts of the credit switch (Fig. 24, Item 24; Fig. 19, Item M3) should close. The contacts should open about .020" to .030" when there is no credit on the ratchet wheel.

B. SERIES RELAY

The relay (Fig. 24, Item 1) located on the left side of the Relay Box is the series relay.

The series relay has two sets of contacts. The wear allowance on the contacts of the Series Relay should be .020" to .030". The arc gap of the double-throw contact should be between .015" and .025".

Both normally open contacts of the series relay should close at the same time. Adjustments necessary to secure the proper contact wear allowance or to make the contacts close at the same time, should be made by adjusting the moving contact blade and the armature stop.

C. CANCEL SOLENOID

The cancel solenoid (Fig. 24, Item 2) operates each time a selection is made and cancels a credit from the ratchet wheel by means of the engaging pawl.

When the cancel solenoid plunger is pushed through its entire stroke by hand, the ratchet wheel should be rotated far enough to allow the ratchet escapement lever to engage the next tooth with a clearance of .010" to .020" between the escapement lever and the tooth. The proper clearance between the ratchet wheel and the escapement lever can be adjusted by means of the brass adjusting screws on the solenoid bracket (Fig. 24, Item 4).

There are two guide brackets which support the connecting link between the solenoid plunger and the cancel pawl. The guide bracket nearest the solenoid has a stop which serves to prevent rotation of more than one tooth on the ratchet wheel when a credit is cancelled. The position of this bracket is adjustable after loosening the one screw beneath the mechanism mounting plate. It should be adjusted so that the ratchet wheel teeth may move about 1/16" after the cancel solenoid plunger has sealed and the ratchet escapement lever has engaged the next tooth of the ratchet wheel.

D. INTERLOCKING SWITCH AND INTERLOCKING RELAY

The interlocking switch (Fig. 24, Item 21; Fig. 19, Item M6) is actuated by the cancel solenoid (Fig. 24, Item 2; Fig. 19, Item M1) through the connecting link. Contact gap B should not close too soon. If it does, the cancel solenoid may be tripped out before it has cancelled a credit from the ratchet wheel. If it closes at the extreme end of the stroke, the contact pressure may be insufficient and cause erratic operation. The adjustment of this switch is not critical. The contact wear allowance may be adjusted by bending the lower contact blade with a bending tool.

When selections are made, the interlocking relay (Fig. 24, Item 22) will operate after the interlocking switch has closed.

The relay is mounted in rubber grommets to prevent mechanical shock reaching it from the mounting plate. The normally closed contact should open before or at the same time the normally open contact closes. The normally open contact should have a wear allowance of at least 1/32".

6. SOLENOID DRUM ASSEMBLY

A. ACCESS TO SOLENOID DRUM ASSEMBLY

Access can be gained to the Solenoid Drum Assembly (Fig. 25) by removing the rear doors of the Symphonola cabinet. The solenoid drum assembly is bolted to the Symphonola frame and may be removed by taking off the two screws and one hex nut, removing the electrical selector cable plug (Fig. 23, Item 13) taking out the plug connecting the motor carry-over switch and the selection cancel switch, the plug that has two wires terminating at the coin tripper assembly and the 5 conductor power cord that terminates at the amplifier. For most maintenance work, it will not be necessary to remove the solenoid drum assembly from the Symphonola chassis.

B. SELECTION SOLENOIDS

When selections are made, one of the solenoid plungers (Fig. 25, Item 12) should push up. A defective solenoid (Fig. 25, Item 11) may be replaced by taking the Solenoid Drum Assembly off the Symphonola Chassis and removing the selector disc (Fig. 25, Item 8) and solenoid

guide plate (Fig. 25, Item 9). When taking off the solenoid guide plate the collector brush blades must be unsoldered from the leads that connect to them. With the aid of a soldering iron the defective solenoid may be removed and a new solenoid replaced. The solenoid guide plate and selector disc may then be replaced and the collector brush leads soldered to their respective terminals.

C. MOTOR CONTROL RELAY

The motor control relay (Fig. 25, Item 2) should operate when the solenoid plunger and stop pin are up or when the motor carry-over switch is closed. The motor control relay receives its current from the 25 volt power transformer on the amplifier or Master Control Station. Its contacts operate the Symphonola motor. If the motor control relay fails to operate, the relay coil may be defective or there may be an open circuit in the power circuit or between the solenoid plunger (Fig. 25, Item 12) and the plunger contact spring (Fig. 25, Item 13). This may be checked with a volt meter capable of indicating approximately 30 volts A.C.

If the motor control relay operates and the Symphonola does not start, the most likely trouble in the relay would be with the contacts. Either the contacts have insufficient pressure or they may be dirty and pitted. If the pressure is insufficient, it should be increased by bending the stationary contact blade with a contact bending tool. If the contacts are dirty or pitted, they may be cleaned with a contact burnishing tool.

Access to the motor control relay and its contacts is obtained by removing the motor control relay cover (Fig. 25, Item 22) which is held in place over the motor control relay by two spring clips.

If the motor control relay does not open the motor circuit to stop the Symphonola motor when the turntable is at the bottom of its travel, the motor carry-over switch (Fig. 25, Item 2) should be adjusted.

D. ALIGNMENT OF REAR VERTICAL HELIX

To align the solenoid selector disc (Fig. 40, Item 9) with the rear Helix (Fig. 40, Item 11) of the Symphonola Chassis, first loosen the set screws for the lower coupling arm, allow a stop pin (Fig. 25, Item 11) to engage the selector disc stop (Fig. 40, Item 7) and rotate the helix until the respective finger is in position for selecting the corresponding record tray. The set screws of the lower coupling arm should then be tightened and the unit is ready for operation.

E. PIN CANCEL RELAY

The pin cancel relay (Fig. 25, Item 6) operates in conjunction with the selection cancel switch (Fig. 25, Item 16; Fig. 40, Item 10) to push down the selector stop pin when a record tray is selected.

The selector pin reset shaft should operate freely so that when the pin cancel relay

armature is brought down it will push the selector stop pin into its normal position. If the reset shaft spring is too stiff, the armature may lack the necessary power to reset the selector stop pin. The strength of the spring may be reduced by removing a turn.

F. SELECTOR DISC AND STOP PIN ADJUSTMENT

Under normal operating conditions, no adjustment of the Selector Disc (Fig. 25, Item 8) is necessary. However, if the Solenoid Drum is removed from the chassis and dismantled, some adjustments should be checked. If the plunger is pushed up slowly, the selector stop pin (Fig. 25, Item 10) should mechanically engage the Selector Disc Stop before electrical contact is made between the solenoid plunger contact and the contact spring (Fig. 25, Item 13).

G. SELECTOR SHAFT ADJUSTMENT

There is an adjustment screw at the bottom of the solenoid drum assembly which regulates the end thrust of the selector shaft. There should be no side thrust of the shaft. The selector disc, which is on the shaft, should rotate freely. When this adjustment has been made, the locking nut on this adjustment screw should be tightened.

H. COUNTER UNIT

Should the counter unit (Fig. 26, Item 7) fail to register each selecting pulse or fail to register at all, a check should be made to determine positively that the unit is actually defective.. If the unit proves defective, it should be returned for factory repairs and adjustment. The adjustment of this unit in the field is not recommended.

I. COUNTER RELAY

The counter relay (Fig. 26, Item 8) controls the counter unit (Fig. 26, Item 7). Each time the counter relay contacts are closed, the counter unit will register one more unit on the dials. Other than seeing that the contacts of the counter relay are kept clean (by using a contact burnisher when necessary), no adjustments are recommended for this unit as the contact adjustments are rather critical. It is recommended that defective units be returned to the factory for adjustment or replacement.

SERVICE NOTES

1. PROPER NUMBER OF CREDITS FAIL TO REGISTER IN THE MECHANICAL SELECTOR

A. MAGAZINE RELAY DOES NOT RESPOND TO COIN

If the magazine relay does not respond to a coin, a check should be made for a loose line cord connection at the wall outlet.

The magazine relay magnet (Fig. 5A, No. F3207) may also be defective. There may be a broken wire or a bad connection on the magnet posts.

B. TOO FEW PLAYS FOR THE AMOUNT OF COINS INSERTED

The coin switches may not be making proper contact. If a coin switch fails to make proper contact it is usually because it has accumulated dirt or film on the contact surfaces or because the contact surfaces are pitted. Dirt or film should be cleaned from the contacts and pitted contacts should be polished with a burnishing tool. There may also be insufficient contact pressure. To correct this, the contact blades may be bent with a contact bending tool to increase contact pressure.

C. TOO MANY PLAYS FOR THE AMOUNT OF COINS INSERTED

One of the coin switches may be making more than one contact when a coin passes the switch lever. The coin switch assembly should be checked and serviced as outlined in 1 - B above.

The play magazine switch may not be cutting off. Check for binding of any sort in the switch lever or the escapement lever and the ratchet wheel. The escapement lever should be free of binding and have about 1/64 inch clearance between the teeth of the lever (Fig. 5A, No. 1512A) and the ratchet wheel (No. 1525A) as the escapement lever is moved to and from the magazine relay magnet (No. F-3207). A weak escapement lever spring (No. 1150) may cause the escapement lever to fail to hold the ratchet wheel after the ratchet wheel has been rotated. This spring may be strengthened by cutting off two or three coils.

2. MOTOR FAILURE

A. MOTOR DOES NOT START

There may be a blown or defective motor fuse on the amplifier. Make sure the contacts in the play magazine are closed and are making proper contact. Binding in the mechanism may place a heavy load on the motor and not allow it to turn.

B. MOTOR DOES NOT START UNTIL COUPLING IS DISCONNECTED AND MOTOR IS SPUN WITH FINGERS

The cause of trouble in this case may be a defective starting winding switch or a burned out starting winding. By removing the end plate of the motor, the starting winding switch is made

accessible. It should be cleaned with fine sand paper and wiped with a clean cloth.

C. STARTING WINDING CUTS IN AND OUT CONTINUOUSLY

This is usually due to binding in the chassis mechanism which allows the motor to just come up to enough speed to open the starting winding switch, whereupon the motor speed is immediately reduced due to the heavy drag, and the starting switch closes again.

D. MOTOR FUSE BLOWS

If the motor fuse is blown it should be replaced with a 2.5 ampere non-tamperable fuse (No. 14173). Before replacing, find what caused the fuse to blow. There are a number of reasons that may cause the motor fuse to blow. The most usual reason is the failure to remove all shipping blocks. Be sure the instrument is completely unblocked.

Binding in the transmission gears (Fig. 4, No. 3054) and (No. 1071) and tight bearings in the motor may cause the motor to overload. After loosening the coupling (Fig. 4, No. 1083) the motor should turn freely.

Record trays may be jammed due to dirt or grit in the tray grooves. Neither vaseline nor grease should ever be used to lubricate the tray grooves because the trays are almost certain to bind. If grease has been used in the tray grooves, it can be cleaned off by applying a light grade of good quality lubricating oil with a brush.

If the instrument has been in a cold place over night, it should be allowed to warm up before operating, otherwise the lubrication will be stiff, placing a heavy load on the motor which will often blow the fuse.

3. RECORD TRAY SELECTOR PULLING OUT TWO OR MORE TRAYS AT ONE TIME

The selector helix rollers (Fig. 6A, No. 1223) should be in line with the centers of the selector pawl springs (No. 1184). If out of line so that the roller also engages the spring above or below the one selected, it may depress two pawl springs causing two trays to be withdrawn. The selector slide rail (Fig. 6A, No. 1181) may have moved downward slightly, or the helix (Fig. 6A, No. 6178) may have moved up or down. Before attempting to re-align the selector slide rail, be sure that this is necessary. Make certain that the selector slide pawls (Fig. 6A, No. 1183) are kept in alignment with the grooves in which the lugs of the trays move.

4. TIMING OF MECHANICAL SELECTOR WITH REAR HELIX

In re-aligning the helix, be sure that the proper mesh of the miter gears (Fig. 6F, No. 1210) is maintained, so that the timing of the selector is not disturbed. If one or two rollers are out of

line with the selector pawl springs, the adjustment can be greatly simplified by bending the helix roller mounting stud (Fig. 6A, No. 1222) slightly upward or downward until the proper alignment of the roller with the selector pawl spring is attained.

5. TURNTABLE DOES NOT FUNCTION PROPERLY

A. TURNTABLE FAILS TO RISE TO PLAYING POSITION

If the turntable fails to rise to the playing position, there may be insufficient or faulty lubrication on the turntable spindle bearings. Use SAE-10 oil. DO NOT USE a light sewing machine oil.

Foreign obstacles such as dust or grit may enter the turntable bearings and cause the shaft to bind. Dirt and foreign matter may be removed from the turntable spindle as follows: With the turntable in its uppermost position and the motor cut off, by means of the main switch, flood generously will oil, moving the turntable up and down with the fingers, and wipe off with a clean cloth. Repeat this operation until the shaft and bearings are clean. Re-oil lightly with No. SAE-10 oil.

If the turntable lift springs (Fig. 6A, No. 1009) are too weak, replace with new springs from the factory.

It is possible that the turntable gears may be meshed too tightly. There should be slight play between the teeth of the turntable worm gear (Fig. 4, No. 1528A) and steel worm (Fig. 4, No. 1022). The transmission casing (Fig. 4, No. 1040) containing the steel worm assembly can be moved away from the turntable worm gear (Fig. 4, No. 1528A) to allow about .005" play between the teeth of the gears.

B. TURNTABLE DOES NOT ROTATE WHEN IN PLAYING POSITION

The turntable clutch (Fig. 4, No. 1014) in the lower end of the turntable spindle should have a slight slippage to absorb the jar as it engages with the clutch pin underneath the turntable gear (No. 1528A). If this clutch is too loose it will not drive the turntable. In this event, the clutch spring (No. 1315) should be replaced.

The turntable clutch (Fig. 4, No. 1014) should engage the pin underneath the turntable gear (Fig. 6A, No. 1528A). With the turntable in the raised position, the turntable elevating cam (No. 1006) should be clear of the cam roller (Fig. 6A, No. 1016) so that the turntable clutch will engage the clutch pin in the turntable gear. If the turntable elevating cam does not stop in the correct playing position, it can be slightly adjusted by means of the adjusting screw on the clutch release pawl (No. 1077) mounted on the turntable elevating cam (Fig. 4, No. 1006).

6. IMPROPER ADVANCE OF REAR HELIX

A. SELECTOR MECHANISM BINDS

The selector mechanism should rotate freely when the selector levers are in the non-selecting position. Binding of any part of the selector mechanism would cause it to operate improperly.

B. FRONT HELIX PINS CAUGHT ON SELECTOR LEVER TOOTH

If a selector lever tooth continues to engage one of the front helix pins (Fig. 5B, No. 1254) the helix could not rotate, and would repeat the same selection. To eliminate this, the front helix (Fig. 5B, No. 6062A) should be lowered slightly by lowering the stop pin until the helix pins clear the stop teeth on the levers above.

C. IMPROPER TIMING OF REAR HELIX

The rear helix (Fig. 6A, No. 6178A) should rotate 21/20 of a revolution for each complete cycle of the cam shaft. This can be adjusted as follows: When all selector keys are in the cancelled position, place the roller (Fig. 6E, No. 1822) in one of the recesses of the sprocket (No. 1221), put a pencil mark on the sprocket at a point where the roller is in contact - then start the mechanism in motion and watch the rotation of the sprocket. It must turn 21/20 of a revolution, or one recess of the sprocket past the pencil mark, and the lock roller (No. 1822) must stop directly in this recession. The rotation of the selector is controlled by the segment gear (Fig. 6A, No. 1807). If the amount of rotation of the selector is not correct, an adjustment can be made by advancing or retarding the small adjusting screw in the segment gear (No. 1807). This segment gear rotates the helix through the small driving gear (Fig. 6F, No. 1809) that is mounted on the selector shaft (No. 1816).

D. HELIX LOCK ROLLER STOPS ON SPROCKET TOOTH

When the Symphonola with the mechanical selector is playing in rotation, the helix may be stopping with the lock roller (No. 1822) resting on a tooth of the sprocket (No. 1221). This will happen when the rear helix is not properly timed as explained above. The segment gear (Fig. 6A, No. 1807) does not travel the proper distance. The helix (No. 6178A) should stop after being rotated in such a position that the helix lock roller (Fig. 6E, No. 1125) rests in the recess of the sprocket.

7. CHANGING MECHANISM NOT SET IN OPERATION AT END OF RECORD PLAY

A. WORN OR DAMAGED STOP GROOVE

If the stop groove in the record is worn out or damaged, discard such a record and replace it with a new one.

B. BINDING OF TONE ARM SUPPORT ROD

Binding of the tone arm support rod (Fig. 5A, No. 1121) may cause it to skip over and not follow the groove. This binding

should be remedied before attempting any adjustments.

C. INCORRECT CUT-OFF ADJUSTMENTS

The changing mechanism should be set in operation when the needle enters the stop groove and has travelled to within a distance of 1-7/8" from the center of the turntable spindle. Should adjustments be necessary, refer to (Fig. 6C) and make adjustments with the adjusting screw (No. 1085) until the proper setting has been made. Occasionally a record may be found where the music has been recorded past the limits set for the cut-off mechanism. It is advisable to reset the mechanism to trip off for such a record.

D. BINDING OF TRANSMISSION WORM SHAFT

The transmission worm shaft (Fig. 4, No. 1044) may be binding. It should slide back and forth freely. The steel worm gear (Fig. 4, No. 1071) and the large worm gear (Fig. 10, No. 3054) may mesh too tightly, causing the shaft to bind slightly, or the flat spring (Fig. 4, No. 1075) may be too weak. The spring may be strengthened by removing and reforming the bend, taking care not to make the bend too sharp or the spring make break.

E. BINDING OF TRIP LEVER

If the trip lever in the rear of the cabinet is binding in the hole through the rear panel, it may cause pressure against the clutch retaining yoke (Fig. 6C, No. 1508) preventing the yoke from engaging the clutch retaining lever (No. 1052). The trip lever should work freely with the rear panel installed.

8. NEEDLE DOES NOT ENTER RECORD GROOVE PROPERLY

A. ALIGNMENT OF NEEDLE WITH EDGE OF RECORD

As the turntable comes up with a record, the needle should contact the record about 3/32" from its edge. This is the condition for an average record which will be found to be approximately 9-7/8" in diameter. The adjustable support hook (Fig. 6A, No. 1846) or 3115 that holds the tone arm in position as the turntable is being raised, may be adjusted so that the needle will rest in its proper position on the record.

B. NEEDLE FAILS TO ENTER GROOVE

If the needle stays in one position on the record and does not enter the playing groove, it may be caused by binding of the tone arm support rod (Fig. 6A, No. 1121). It is also possible that the instrument may be too far out of level. Any binding in the tone arm support rod (No. 1121) should be traced down and remedied, as this will cause improper reproduction of music as well as excessive record wear.

If the instrument is too far out of level, it should be leveled up so all parts may function properly.

A tone arm booster spring (No. 1124) is shown in Fig. 6A. This may be adjusted if necessary to assist the movement of the needle toward the playing grooves

of the record. If the tone arm booster spring is adjusted with too much tension, it may cause the tone arm to skid across the record when the turntable rises to the playing position.

9. MOTOR CARRY OVER SWITCH ADJUSTMENT

A. CONTACT PRESSURE

The Motor Carry Over Switch (Fig. 8, No. 6179A) should be so adjusted that it will just open when 125 grams pressure (approx. 5 oz.) is applied with a gram gauge on the movable blade at 1 inch from the end. This adjustment is made by means of a spring bender.

B. DEGREE OF CONTACT OPENING

When in the "off" position contacts should be adjusted so that they will be open from 1/16" to 1/8".

C. TIMING OF MOTOR CARRY OVER SWITCH

After the contact pressure and spacing have been adjusted, as described above, the timing is to be done by means of adjusting the switch position. In order to accomplish this adjustment, the Symphonola chassis is to be operated until the turntable is just at the bottom of its stroke. Under this condition, the switch is to be loosened and slid up or down until it just opens the contacts. It should then be thoroughly tightened at this point. After this is done, the Symphonola chassis should be operated and checked to see that the turntable stops just at the bottom of its downward stroke. This is a test of the timing adjustment. If it stops too late, the helix may be rotated over the next pin. If this happens and the next pin is selected it will be impossible for this pin to be pushed all the way up because it will be stopped by the Selector Disc Stop. If this particular number is selected, no play will result. On the other hand, if it stops too early, the turntable will not be completely at the bottom of its stroke and, as a result, it will be impossible to slide out the lower record trays.

10. WARBLE OR TREMOLO EFFECTS IN THE MUSIC

Sometimes the music will appear to be wavering or varying in loudness at a rather high rate causing a warbling of steady notes or a tremolo. Several things may contribute to this.

Occasionally iron filings near the permanent magnet or the needle in the pickup may be set in vibration distorting the tone. Very often loose needles or defective needles will cause tone warble.

Gummy oil or dry bearings will contribute to tone warble. The bearings should be washed clean and new oil applied.

The motor should be mounted free in its spring suspension and the couplings on the motor shaft should run true. If these couplers are eccentric or if the shaft is not properly aligned it might contribute to this warble effect.

"Burrs" or "flats" on the turntable spindle No. 1121, Fig. 6A, and the varying surfaces may also produce the warbling tone. These burrs should be polished off to allow free movement of the spindle in the bearing.

The teeth in the fiber gear No. 1528A, Fig. 6A, should be properly "worn in". By applying pressure to the fiber gear, pushing it in the direction of the worm gear, it is possible to wear down objectionable points in the gear. The pressure should be applied with a soft smooth material preferably a block of wood; it should be just enough to slow up the motor slightly and should be applied for about one minute.

The small retaining yoke No. 1024 which holds up the fiber gear hub should be free when the turntable is in the playing position.

11. SLOW RECORD START

Occasionally the music sounds as though the turntable started rotating too slowly. This is invariably caused by a tight clutch spring (Fig. 4, Item 1815).

The clutch is too rigid and when it first engages the turntable drive gear (Fig. 6, Item 1528A) it rotates the turntable ahead of the point of engagement. While it coasts, the music starts playing and it sounds as though the turntable is running at slow speed. The clutch then catches up with the turntable and it continues to be normal.

This can be remedied by reducing the tension of the clutch spring. A small screw-driver should be used to push the embedded end of the spring back, unwinding it and causing it to have less tension.

12. ADJUSTMENT OF SYMPHONOLA CLUTCH THROWOUT LEVERS

This adjustment consists essentially in properly aligning the two levers (Fig. 6C, Item 1052 and Item 1507) on the reset shaft (Fig. 6D, Item 1511). Before starting any adjustments be sure that the turntable is in the playing position with the bronze roller in the lowest part of the cam.

Also be certain the transmission clutch and pin (Fig. 4, No. 1509) is flush with the end of the shaft. In early models of Symphonolas this clutch body was fastened with setscrews. Next be sure that the collar holds the fork against the casting when the pin is at the bottom of the slot in the worm gear.

The Clutch Retaining Lever (Fig. 6C, No. 1052) is the first to be permanently set. However, first take the Transmission Clutch Release Lever (Fig. 6C, No. 1507) and tighten it on the shaft in approximately a vertical position. Now place the retaining lever up against the Yoke bar (being careful it does not rub against the inside of the Yoke (Fig. 6D, No. 1508) and then holding it there with your thumb, draw back on the Clutch Release Lever until you

have approximately 1/32" (no more) space between the end of the pin in the transmission clutch (Fig. 4, No. 1509) and the pin in the turntable worm gear shaft.

Now loosen the Transmission Clutch Release Lever again and slide it along the shaft until it is in line with the head of the screw on the Cam Shaft Clutch. Throwout Pawl (Fig. 4, No. 1077); then tighten the screw on the Release Lever just enough so as to hold its position on the shaft but not so tight as to lock it. The angle of the lever on the shaft should be such that when the throwout pawl is brought up against it approximately 1/16" of its upper edge will be under the horizontal flat part of the lever. When in this position, tighten the locking screw on the Release Lever.

In tightening the screws which hold the levers to the shaft a proper screwdriver should be used to set the screws up tight and the lock nuts should be tightened with a wrench while the screws are held with a screwdriver.

13. SOUND EQUIPMENT

A. SOUND EQUIPMENT APPARENTLY "DEAD"

Note whether the light fuse (Fig. 10, Item 15; Fig. 13, Item 15; Fig. 16, Item 15) on the amplifier is blown. If it is blown, replace it with a 2-1/2 ampere fuse (No. F-7846). Before replacing, test for shorts in the light circuits.

Make certain that there is a separation between the contact points of the pickup shorting switch (Fig. 6A, No. 6005-A).

Check to see if the needle is making contact with the record.

With the instrument on, the turntable rotating, the volume control on full, and the pickup shorting switch in open position, remove the 6J5GT tube (Fig. 10, Item 32; Fig. 13, Item 32; Fig. 16, Item 30) nearest the socket marked "P.U." A loud click should be heard. If no click is heard, the trouble will be in the amplifier which should be checked by a competent sound or radio repair man. If a loud click is heard when the tube nearest the socket marked "P.U." is removed, then the trouble may be in the pickup shorting switch, the pickup wires, or the pickup itself.

B. DISTORTED TONE QUALITY

Remove the needle and check its point under a good light. Sometimes a needle that has worn badly will still play some records, but will fail to enter properly the more narrow grooves of others. A needle in this condition will cause poor quality reproduction and should, of course, be replaced.

The needle screw may not be tight enough.

Make certain that the records are still in fairly good condition. This is very important, for the reproduction of music will still be poor if the record is badly worn, or defective, even though the entire sound equipment is in perfect working order.

A shorted or defective tube is often a cause of faulty tone quality.

A loose connection at the pickup terminals or the terminal block on the chassis can affect the tone quality.

Check the volume control by rotating it when a record is being played. If sudden changes in volume are noticed, the cause may be dirt between the contact arm and resistor in the control, or a worn resistor. It is often possible to remove dirt or scale by rotating the control back and forth rapidly. If, after trying this, the control still causes sudden changes in volume, when it is rotated slowly, replacing of the control is advisable.

C. MOTOR HUM

Hum is sometimes caused by the motor when the loops in the motor mounting springs (Fig. 4, No. 1841) touch where they cross. This happens when the springs become damaged in handling and can be corrected by bending them so they do not touch.

D. HUM DURING WARMUP PERIOD

On some of the earlier type 825-5 and 825-10 amplifiers, a slight hum was noticeable when the tubes in the amplifier warmed up. To eliminate this hum, the heater of one of the 6J5GT driver tubes (Fig. 10, Item 33; Fig. 13, Item 33) should be removed from the 6.6 volt winding of the amplifier power transformer (Fig. 10, Item 23; Fig. 13, Item 23) and connected to the 6.0 volt winding of the program lighting transformer (Fig. 10, Item 25; Fig. 13, Item 25). By changing the wiring to the heater of this tube (Fig. 10, Item 33; Fig. 13, Item 33) to correspond with the schematic diagrams (Figs. 9 and 12), the hum during the warmup period will be entirely eliminated.

E. MICROPHONIC TUBES

Due to the high gain and audio output of the type 825-5 and 825-10 amplifiers, the input 6J5GT tube (Fig. 10, Item 32; Fig. 13, Item 32) occasionally becomes microphonic. Interchanging this 6J5GT tube with either of the 6J5GT driver tubes (Fig. 10, Item 33 or 34; Fig. 13, Item 33 or 34) may eliminate this condition, and if it does not, the 6J5GT (Fig. 10, Item 32; Fig. 13, Item 32) tube should be replaced with a new tube.

14. PROPER NUMBER OF CREDITS FAIL TO REGISTER IN THE ELECTRICAL SELECTOR

A. CREDIT MAGNET DOES NOT RESPOND TO COIN

If the Credit Magnet does not respond to a coin, a check should be made for proper connection of the coin chute to the Solenoid Drum. The credit magnet (Fig. 24, Item 17) may also be defective. There may be a broken wire or a bad connection. In checking the credit circuit, refer to schematic diagram (Fig. 21) which shows complete circuit and components involved. All plugs should be checked for proper seating and contact points of series relay should be inspected.

B. COIN SWITCH CONTACTS NOT PROPERLY ADJUSTED

If a coin switch in the coin switch assembly fails to make proper contact, it is usually because it has accumulated dirt or film on the contact surfaces or because the contact surfaces are pitted. Dirt or film should be cleaned from the contacts and pitted contacts should be polished with a burnishing tool.

There may also be insufficient contact pressure. To correct this, the contact blades may be bent with a contact bending tool.

C. RATCHET WHEEL ESCAPEMENT LEVER TOO FAR FROM CREDIT MAGNET

When the ratchet escapement lever (Fig. 24, Item 13) is too far from the credit magnet (Fig. 24, Item 17) the magnetic attraction will not be sufficient to move the escapement lever and store credit on the ratchet wheel. If the escapement lever engages the teeth of the ratchet wheel more than 1/16", the ratchet escapement stop bracket (Fig. 24, Item 16) may be moved closer to the credit magnet. If the engaging tooth of the escapement lever clears the teeth of the ratchet wheel by more than 1/32" when the escapement lever is sealed against the credit pole faces, the credit magnet may be moved toward the escapement lever.

D. RATCHET ESCAPEMENT LEVER ALLOWS TOO MANY PLAYS FOR COINS INSERTED

The hook on the end of the ratchet escapement lever (Fig. 24, Item 13) to which the escapement lever spring (Fig. 24, Item 14) is connected may fail or nearly fail to engage a tooth when the escapement lever is slowly moved toward the credit magnet by hand. This may be due to too great a distance between the ratchet wheel and the escapement lever or to a deformation of the escapement lever. It can usually be corrected by springing the two engaging points of the ratchet lever together.

E. RATCHET WHEEL BINDING

The shoulder on the shoulder screw (Fig. 22, Item 38) may clamp the ratchet wheel assembly to its support bushing. To remedy this, file the hub on the ratchet wheel slightly. Dirt or an accumulation of plating may cause the ratchet wheel to bind. The parts should be thoroughly cleaned of dirt or plating and should be oiled.

15. ELECTRICAL SELECTOR MAKES NO RESPONSE WHEN BUTTONS ARE PRESSED

A. GENERAL CAUSE

It is assumed that there is credit on the ratchet wheel. If the series relay does not operate when a selection button is pressed, the trouble can be found by investigating the series relay circuit (Fig. 20), through the selector switch, the credit switch, the interlocking relay contacts, the series relay coil, the solenoids and the counter relay.

B. CREDIT SWITCH CONTACTS

If the credit switch contacts are open or make poor contact, the starting relay will be inoperative. If necessary, the contacts may be cleaned with a burnishing tool. The contact pressure may be increased by bending the moving blade with a bending tool.

C. INTERLOCKING RELAY CONTACTS

The normally closed contacts of the interlocking relay (Fig. 24, Item 22; Fig. 19, Item M7) are a part of the series relay circuit. Oil or dirt or a combination of oil and dirt may prevent these contacts from closing. They should be cleaned of oil and the surface polished with a burnishing tool.

16. CREDIT DOES NOT CANCEL ON ELECTRICAL SELECTOR

A. SERIES RELAY CONTACTS

The contacts of the series relay (Fig. 24, Item 1) should have approximately .020" wear allowance. Both contacts should close at the same time. If the large contacts do not close, the cancel solenoid cannot operate.

B. CREDIT CANCEL SOLENOID

The credit cancel solenoid (Fig. 24, Item 2) should have a resistance of approximately 1.5 ohms (plus or minus 10%). Credit may fail to cancel if this coil has shorted turns. If the coil is defective, it should be replaced.

C. RATCHET WHEEL ESCAPEMENT LEVER

The ratchet wheel escapement lever (Fig. 24, Item 13) should engage the teeth of the ratchet wheel by approximately 1/32" to 3/64". The ratchet escapement stop bracket (Fig. 24, Item 16) should strike the ratchet escapement lever at the lower edge of the escapement lever. If it strikes the escapement lever at any other point, the escapement lever is likely to bounce and fail to engage the tooth of the ratchet wheel.

D. SOLENOID GUIDE STOP BRACKET

The solenoid guide stop bracket is that bracket nearest the credit cancel solenoid through which the connecting link of the solenoid plunger and the engaging pawl slides. One edge of this bracket serves to stop the ratchet wheel from turning far enough to cancel more than one credit. It should be so adjusted that after the solenoid has sealed, the ratchet wheel may rotate about 1/16", if measured at its circumference. This bracket is adjustable after loosening the mounting screw.

E. RATCHET WHEEL STOP BRACKET INTERFERES

The last credit may fail to cancel if the engaging pin on the credit wheel strikes the ratchet wheel stop bracket. This may contribute a bounce, causing the wheel to rotate backward and prevent the ratchet wheel escapement lever from engaging the desired tooth on the ratchet wheel. The stop may be bent back to remedy this trouble.

17. MOTOR DOES NOT START WHEN A SELECTION IS MADE ON THE ELECTRICAL SELECTOR

A. GENERAL

In all of the following discussions concerning the failure of the motor to start, it is assumed that the selections were made and that the series relay in the electrical selector has operated. A cancellation of credit is an indication that the series relay has operated.

B. SOLENOID PLUNGER DOES NOT PUSH UP

If the solenoid plunger (Fig. 25, Item 12) does not push up, it is probably caused by a defective coil, or by dirt and grease gumming the plunger and the solenoid stop pin (Fig. 25, Item 10). It is also possible that the selector stop pin may strike the stop on the rotating selector disc, which would prevent the solenoid plunger contact from being raised high enough to close the motor control relay, (see timing of motor carry over switch Section 9, paragraph "C".)

If the selector solenoid (Fig. 25, Item 11) is defective, it should be replaced as discussed under "Operation and Maintenance."

When the solenoid plunger and selector stop pin are sticking due to oil or dirt, the foreign matter should be cleaned from the moving parts so that they may slide freely. These parts should not be lubricated.

C. MOTOR CONTROL RELAY DOES NOT OPERATE PROPERLY

When a solenoid plunger is pushed up, the grooved contact surface on the lower portion of the solenoid plunger makes contact with the plunger contact spring (Fig. 25, Item 13) and operates the motor control relay.

If the relay does not operate, it may be defective or it may not be receiving energy. The relay receives its energy from the 25 volt transformer on the amplifier.

If the relay operates and the motor does not run, the motor is probably defective or the contacts on the motor control relay are not completing the circuit, also the motor fuse (Fig. 27, Item 2) may be defective.

If the contacts are dirty, they may be cleaned with a burnishing tool. If they fail to make contact, the lower contact blade may be bent with a contact bending tool until there is wear allowance of at least 1/32".

D. MOTOR CONTROL CIRCUIT

Fig. 27 is a schematic diagram of the motor control relay and the Symphonola motor. This diagram is simplified to show only the circuit of the motor control relay and the Symphonola motor and is self-explanatory.

18. SELECTIONS FAIL TO REGISTER ON SOLENOID DRUM ASSEMBLY

If a selection is received at the solenoid drum, a plunger and selector stop pin will be pushed up starting the motor. It is assumed that if selections fail to register on the Solenoid Drum Assembly (Fig. 25) that a push button has been pressed and the series relay (Fig. 24, Item 1) in the Electrical Selector has operated. A cancellation of credit is an indication that the series relay has operated.

The symptoms and remedies to be applied are discussed in the above paragraph entitled "Solenoid Plunger Does Not Push Up" under Service Notes.

19. ADJUSTMENTS OF 5¢-10¢-25¢ SLUG REJECTOR

A. LEVELING

It is absolutely necessary that the 5¢-10¢-25¢ slug rejector, used in Cabinet Models 8800 and 9800, be level. The spirit level (Fig. 30, Item A) is provided for this purpose. To level this unit, loosen the two wing nuts near the top of the assembly and move the unit to the back or front as required to exactly center the bubble. After leveling the slug rejector, it is necessary to adjust the scavenger linkage (Fig. 30, Item B) so that when the door is closed and locked there will be approximately 1/16" free play in the scavenger button before it engages the scavenger levers.

B. 25¢ ADJUSTMENT

The deflector for fast moving 25¢ size slugs of brass, lead, zinc or german silver may be adjusted by shifting the deflector screws (Fig. 30, Item C). If any of these slugs are accepted, move the deflector down; if moved too far down quarters will be rejected. If copper slugs are being accepted, the deflector for slow moving 25¢ slugs (Fig. 30, Item D) must be moved out; if moved out too far, quarters will be rejected.

C. 10¢ ADJUSTMENT

If 10¢ size slugs of brass, lead, zinc or german silver are being accepted, the adjustment for fast moving 10¢ size slugs (Fig. 30, Item E) must be moved in; if moved in too far, dimes will be rejected. If 10¢ size slugs of copper are being accepted, the deflector for slow moving 10¢ size slugs (Fig. 30, Item F) must be moved out, if moved out too far, dimes will be rejected.

D. MISCELLANEOUS

No adjustment is necessary for 5¢ coins. Items "G", "H", and "I", Fig. 30, are the magnets for 25¢, 5¢ and 10¢ coins respectively; it is recommended that the magnets never be removed unless absolutely necessary. If the magnets are removed, they should be handled with care and a soft "iron keeper" should be slipped across the pole pieces.

The 10¢ scavenger gate (Fig. 30, Item J) has an adjusting screw (Fig. 30, Item M)

which is set to just close it. If the adjusting screw is too far in, the rear scavenger gate (Fig. 30, Item O) will be held open.

The 5¢ undersize gauge (Fig. 30, Item K) must work freely at all times. If any adjustment is made here the unit should also be tested with dimes since the wire feeler on this gauge also serves to deflect dimes into the proper path.

The rotary quarter sizer (Fig. 30, Item L) has no adjustment, but it is important that it work freely at all times, turning easily under the weight of a quarter. USE NO LUBRICANTS.

The scavenger wiper blade (Fig. 30, Item N) is effected by the adjustment of the deflector for fast moving 25¢ size slugs (Fig. 30, Item C). It is important that this part move freely and returns to its normal position when the scavenger is released, otherwise a quarter may be rejected.

(Fig. 30, Item P) is the slug outlet and Items "Q", "R" and "S" are the outlets for 25¢, 5¢ and 10¢ coins respectively.

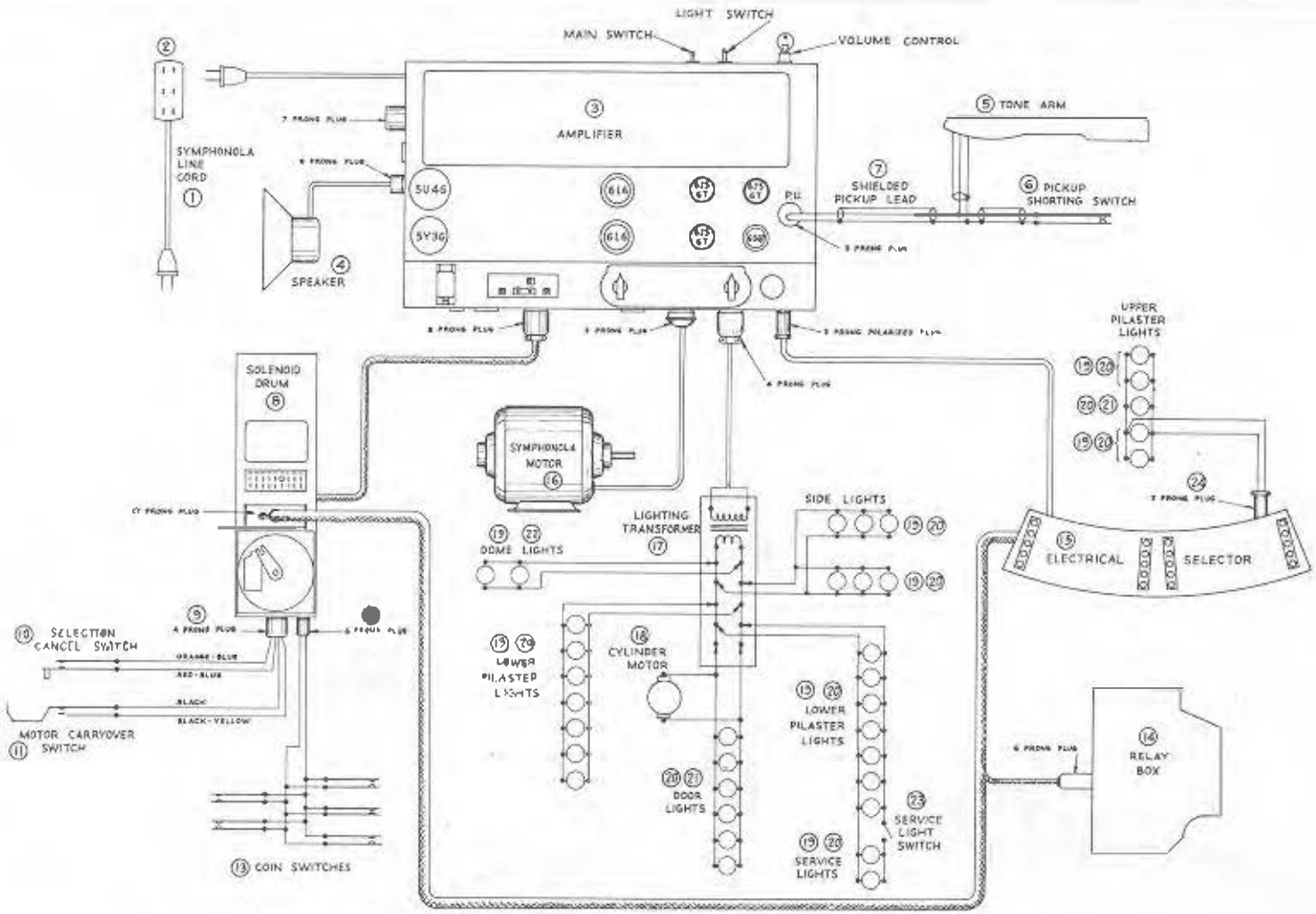

FIGURE NO. 1 - CABINET WIRING DIAGRAM FOR MODELS 8800 AND 9800

ITEM	PART NO.	REQ.		DESCRIPTION	PRICE
1	F-1368	1	-	16 Ft. Line Cord	$ .65
2	F-7867	1	-	Triple Outlet	.15
3	825-10	1	-	8 Tube Amplifier (For Model #8800 Only) (Less tubes)	35.50
	825-5	1	-	8 Tube Amplifier (For Model #9800 Only) (Less tubes)	35.50
4	F-9024	1	-	15" Electrodynamic Speaker (For Model #8800 Only)	11.00
	F-9824	1	-	15" Electrodynamic Speaker (For Model #9800 Only)	16.50
5	F-6824-A	1	-	Tone Arm Assembly	8.00
6	F-6005-A	1	-	Pickup Shorting Switch	.15
7	F-7529	1	-	Shielded Input Lead and Plug	.50
8	2220-72	1	-	Solenoid Drum	23.00
9	F-7413	1	-	4 Prong Plug	.20
10	11137	1	-	Selection Cancel Switch	.25
11	F-3203	1	-	Motor Carryover Switch	.35

ITEM	PART NO.	REQ.		DESCRIPTION	PRICE
12	F-3827	1	-	6 Prong Plug	.20
13	F-6001	5	-	Coin Switch	ea. .10
14	RB-6Z	1	-	Relay Box Assembly	12.50
15	SA-6Z	1	-	Electrical Selector Switch Assembly	15.00
16	F-1090	1	-	Symphonola Motor (110 V. 60 Cycle)	17.00
17	F-7813	1	-	Lighting Transformer	3.25
18	F-8882	1	-	Cylinder Motor	3.50
19	F-7814	26	-	Light Socket	ea. .10
20	F-7817	55	-	#81 Mazda Lamps	ea. .10
21	F-7810	7	-	Light Socket	ea. .10
22	F-7816	2	-	#47 Mazda Lamps	ea. .15
23	F-6972	1	-	Service Light Switch and Bracket	.25
24	F-3896	1	-	2 Prong Polarized Plug	.35

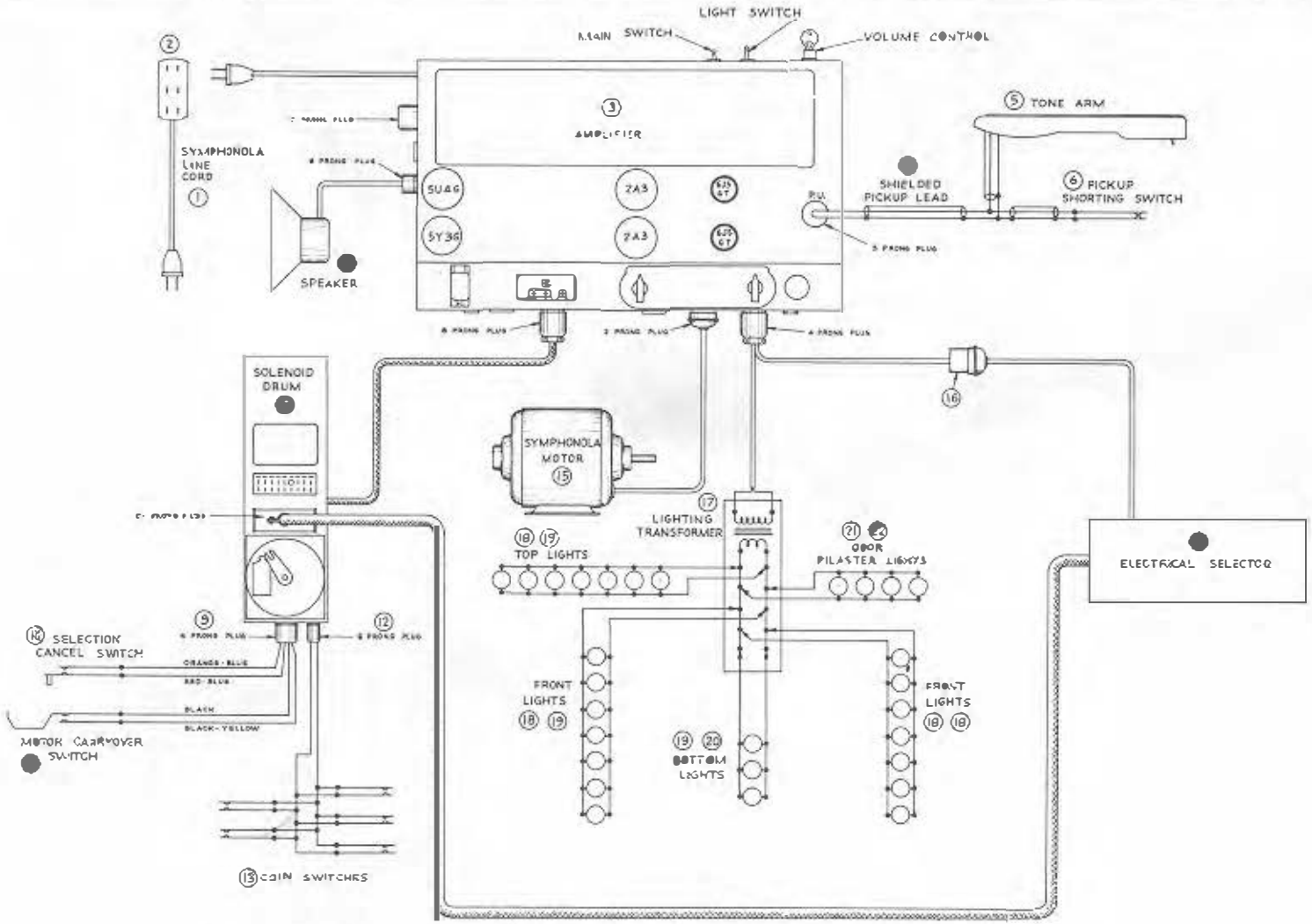

FIGURE NO. 2 - CABINET WIRING DIAGRAM FOR MODEL 7850

ITEM	PART NO.	REQ.	DESCRIPTION	PRICE
1	F-1508	2 -	18 Ft. Line Cord	$ .85
2	F-7867	1 -	Triple Outlet. .	.15
3	6K-5	1 -	6 Tube Amplifier less Tubes . .	32.50
4	F-7012	1 -	15" Electrodynamic Speaker.	11.00
5	F-6024-A	1 -	Lightweight Tone Arm Assembly .	5.00
6	F-6023-A	1 -	Pickup Shorting Switch	.15
7	F-7412	1 -	Shielded Pickup Lead & Plug. .	$ .65
8	[illegible]	1 -	Solenoid Drum. .	25.00
9	F-7413	1 -	4 Prong Plug . .	.20
10	121837	1 -	Selection Cancel Switch	.25
11	F-5203	1 -	Motor Carryover Switch	.35
12	F-2327	1 -	6 Prong Plug . .	.20
13	F-6001	5 -	Coin Switch. . . ea.	.10
14	3S-3	1 -	Electrical Selector Assy.	27.50
15	F-1050	1 -	Symphonola Motor (110 V.-60 Cycle).	$17.00
16	F-7842	1 -	2 Prong Receptacle. . . .	.15
17	F-7825	2 -	Lighting Transformer.	5.25
18	F-7814	21 -	Light Socket. . . ea.	.10
19	F-7817	24 -	981 Grain Lamp. . ea.	.10
20	F-7810	3 -	Light Socket. . . ea.	.10
21	F-7816	4 -	Light Socket. . . ea.	.10
22	F-7815	4 -	987 Grain Lamp. . ea.	.13

FIGURE NO. 3 - CABINET WIRING DIAGRAM FOR MODEL 7800

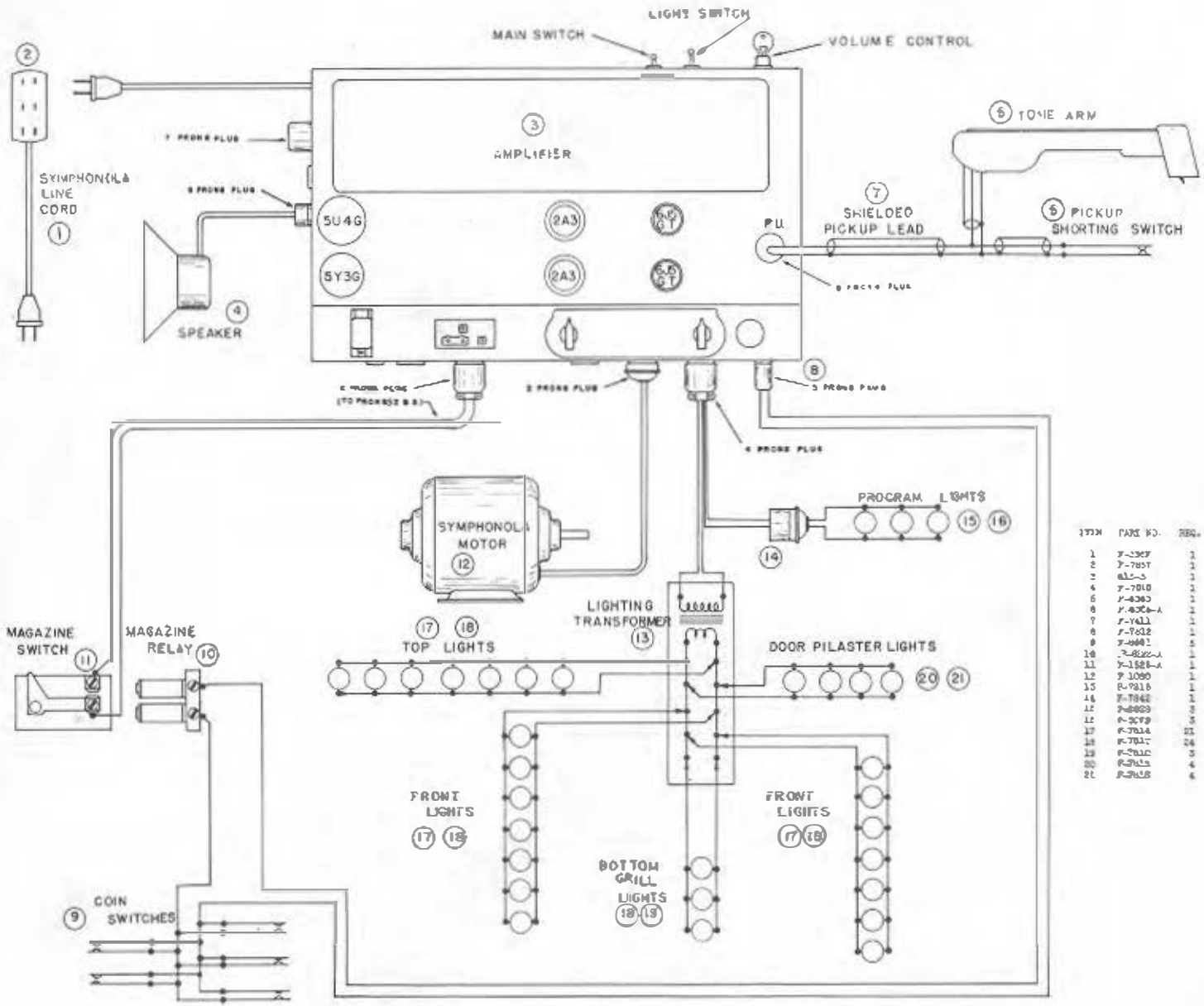

ITEM	PART NO.	REQ.		DESCRIPTION	PRICE
1	[illegible]	1	-	18 Ft. Line Cord	$ .66
2	[illegible]	1	-	Triple Outlet.	.25
3	[illegible]	1	-	6 Tube Amplifier less tubes.	32.50
4	[illegible]	1	-	15" Electrodynamic Speaker	11.00
5	[illegible]	1	-	Tone Arm Assembly.	8.00
6	[illegible]	1	-	Pin Tip Shorting Screw	.18
7	[illegible]	1	-	Shielded Input Lead and Plug	.65
8	[illegible]	1	-	5 Prong Plug	.20
9	[illegible]	5	-	Coin Switch.	ea. .10
10	[illegible]	1	-	Magazine Relay Assembly.	1.00
11	[illegible]	1	-	Magazine Switch.	.06
12	[illegible]	1	-	Symphonola Motor (110 V. 60 Cycles).	17.00
13	[illegible]	1	-	Lighting Transformer	5.00
14	[illegible]	1	-	2 Prong Receptacle	.18
15	[illegible]	3	-	Light Socket	ea. .15
16	[illegible]	3	-	117 Volt, 18 Watt Lamp	ea. .15
17	[illegible]	21	-	Light Socket	ea. .10
18	[illegible]	24	-	#81 Made Lamp	ea. .10
19	[illegible]	3	-	Light Socket	ea. .10
20	[illegible]	4	-	Light Socket	ea. .10
21	[illegible]	4	-	#81 Made Lamp	ea. .15

FIGURE NO. 4 - SYMPHONOLA

PART NO.	DESCRIPTION	NO. USED	PRICE
F-1000	- Top Shelf.	1	$ 5.20
F-1003	- Rear Frame	1	4.20
F-1005	- Turntable Elevating Lever.	1	0.75
F-1006	- Turntable Elevating Cam.	1	0.35
F-1007	- Turntable Elevating Cam Lever.	1	0.25
F-1008	- Spacer Link.	1	0.25
F-1009	- Elevating Lever Spring	2	ea. .25
F-1010	- Turntable Spindle.	1	.65
F-1011	- Elevating Thrust Bearing	1	.45
F-1012	- Elevating Thrust Bearing Link.	2	ea. .05
F-1013	- Elevating Thrust Bearing Ring.	1	.15
F-1014	- Turntable Clutch Body.	1	.85
F-1016	- Turntable Lifting Cam Roller	1	.10
F-1018	- Turntable Elevating Link Screw	4	ea. .10
F-1019	- Elevating Thrust Bearing Screw	2	ea. .05
F-1022	- Turntable Drive Worm 60 Cy. 15-1 Ratio	1	.85
F-1024	- Turntable Gear Retainer.	1	.05
F-1030	- Turntable Elevating Spacer Link Screw.	2	ea. .05
F-1055	- Turntable Spindle Clutch Spacer. . . .	3	ea. .05
F-1038	- Turntable Spindle Bracket.	1	1.10
F-1040	- Transmission Bearing	1	1.25
F-1041	- Transmission Shaft	1	.10
F-1044	- Transmission Clutch Shaft.	1	.10
F-1060	- Clutch Release Spacer.	1	.05
F-1063	- Transmission Drive Shaft Collar. . . .	1	.10
F-1065	- Motor Drive Coupling Shaft	1	.10
F-1066	- Drive Shaft Coupling Leather	2	ea. .05
F-1071	- Cam Shaft Drive Worm	1	.90
F-1076	- Cam Shaft Drive Clutch Engaging Spring	1	.10
F-1077	- Cam Shaft Clutch Throw-Out Pawl. . . .	1	.15
F-1078	- Cam Shaft Clutch Throw-Out Pawl Spring	1	.05
F-1083	- Transmission Drive Shaft Coupling. . .	4	ea. .15
F-1090	- Motor.	1	19.00
F-1095	- Motor Mounting Bolt.	4	ea. .05
F-1129	- Tone Arm Cam Roller Screw.	1	.05
F-1130	- Tone Arm Cord Terminal Plate	1	.10
F-1180	- Selector Slide (Casting Only).	1	.80
F-1181	- Selector Slide Bolt.	1	.35
F-1186	- Selector Slide Pawl Spring	1	.25
F-1210	- Selector Bevel Gear.	2	ea. .35
F-1269	- Selector Slide Spring Clamp.	1	.10
F-1509	- Transmission Clutch and Pin.	1	.25
F-1511	- Transmission Clutch Release Rod and Pins	1	.80
F-1528	- Turntable Drive Gear Hub and Pin . . .	1	1.00
F-1572	- Turntable Assembly	1	.75
F-1801	- Rear Helix Lock Link	1	.25
F-1807	- Rear Helix Operating Segment Gear. . .	1	.25
F-1815	- Rear Helix Operating Clutch Spring . .	2	ea. .10
F-1840	- Motor Mtg. Base.	1	1.10
F-1841	- Motor Mtg. Springs	2	ea. .25
F-3034	- Transmission Bearing Support	1	.25
F-3054	- Cam Shaft Drive Worm Gear.	1	2.50
F-3085	- Thrust Collar (Rear Helix Shaft) . . .	1	.10
F-3200	- Rear Helix Upper Bearing	1	.10
F-3201	- Rear Helix Shaft	1	Order F-6178
F-6178	- Rear Helix Assembly.	1	1.60

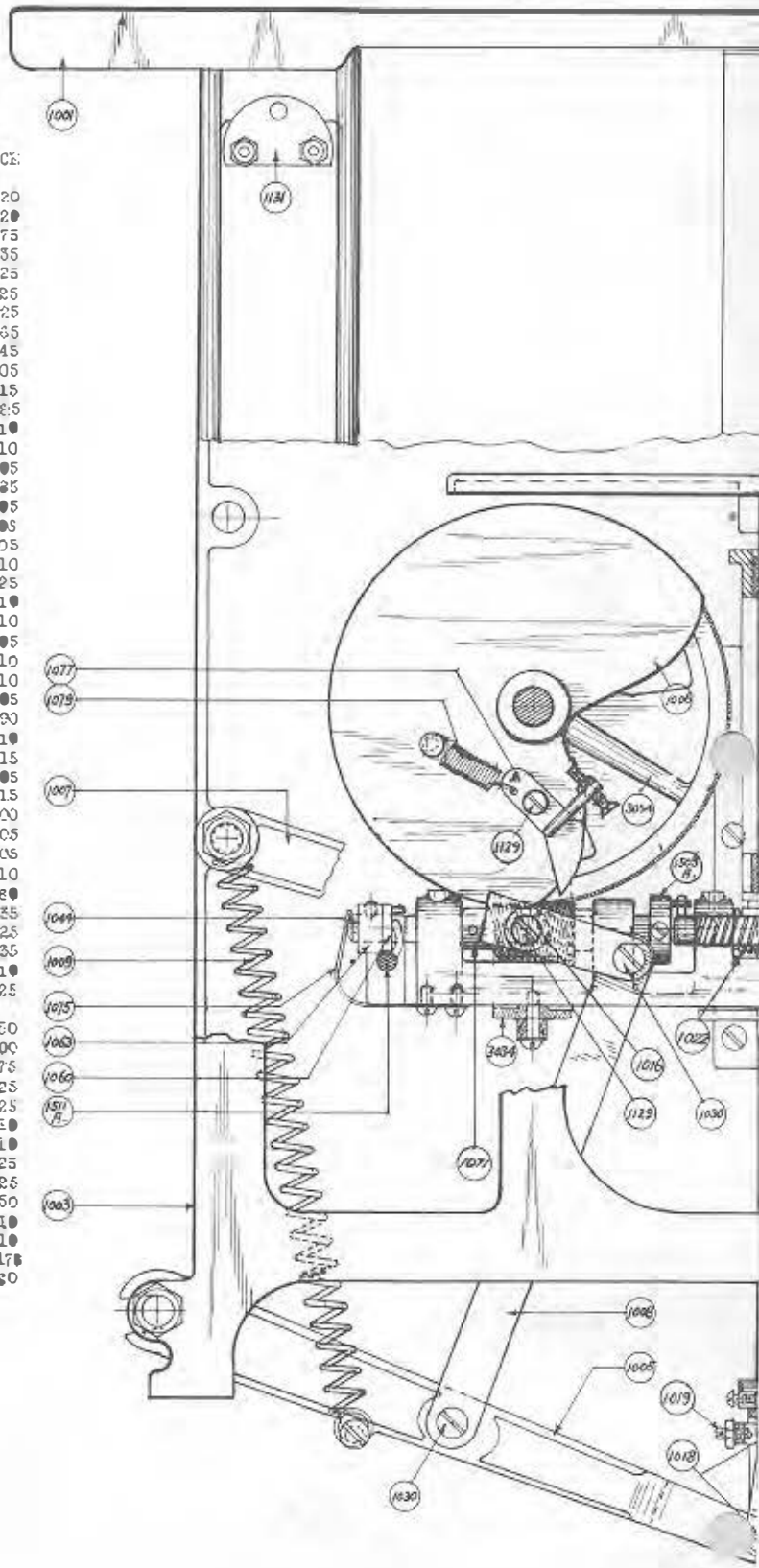

CHASSIS - REAR VIEW (CUTAWAY)

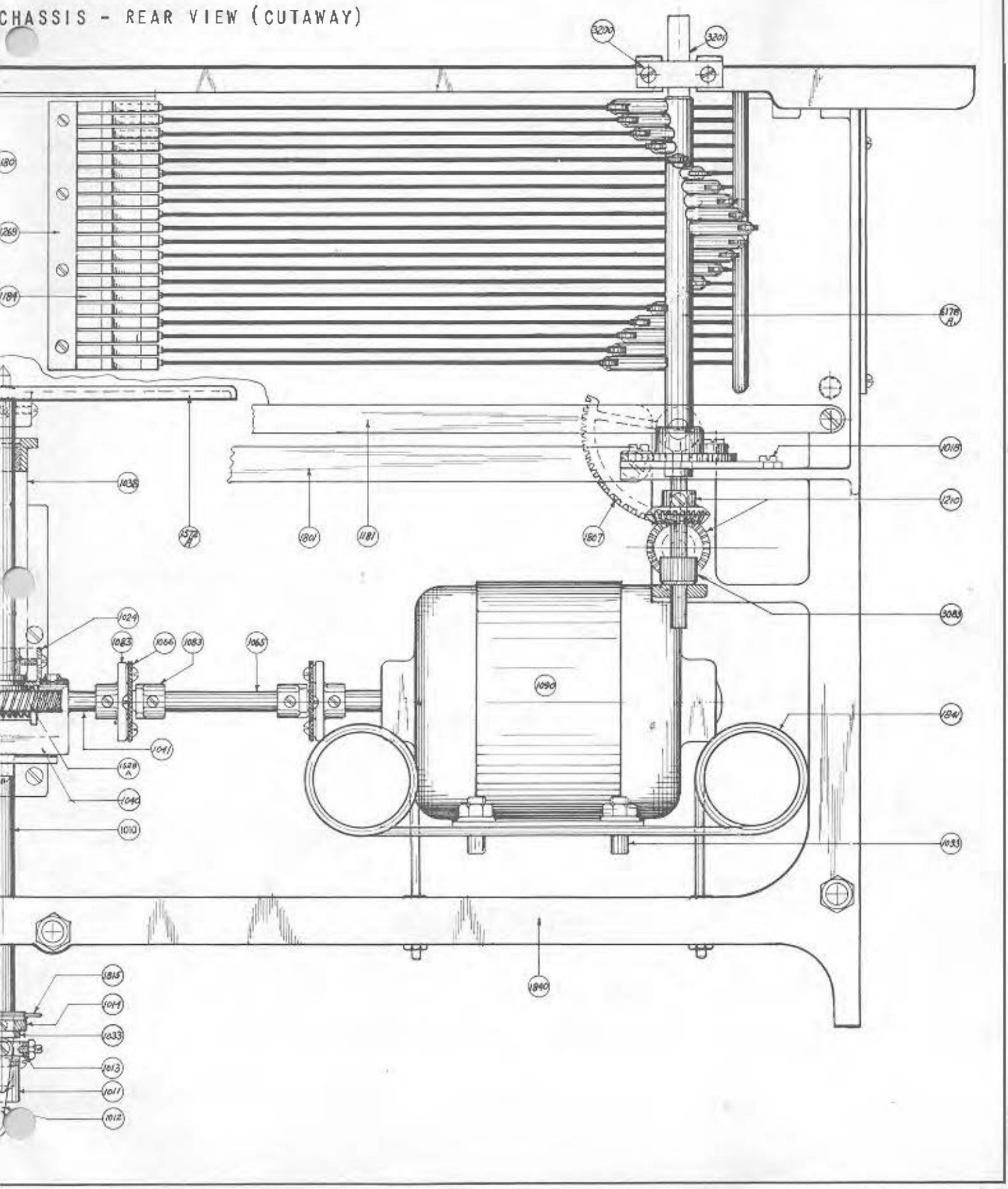

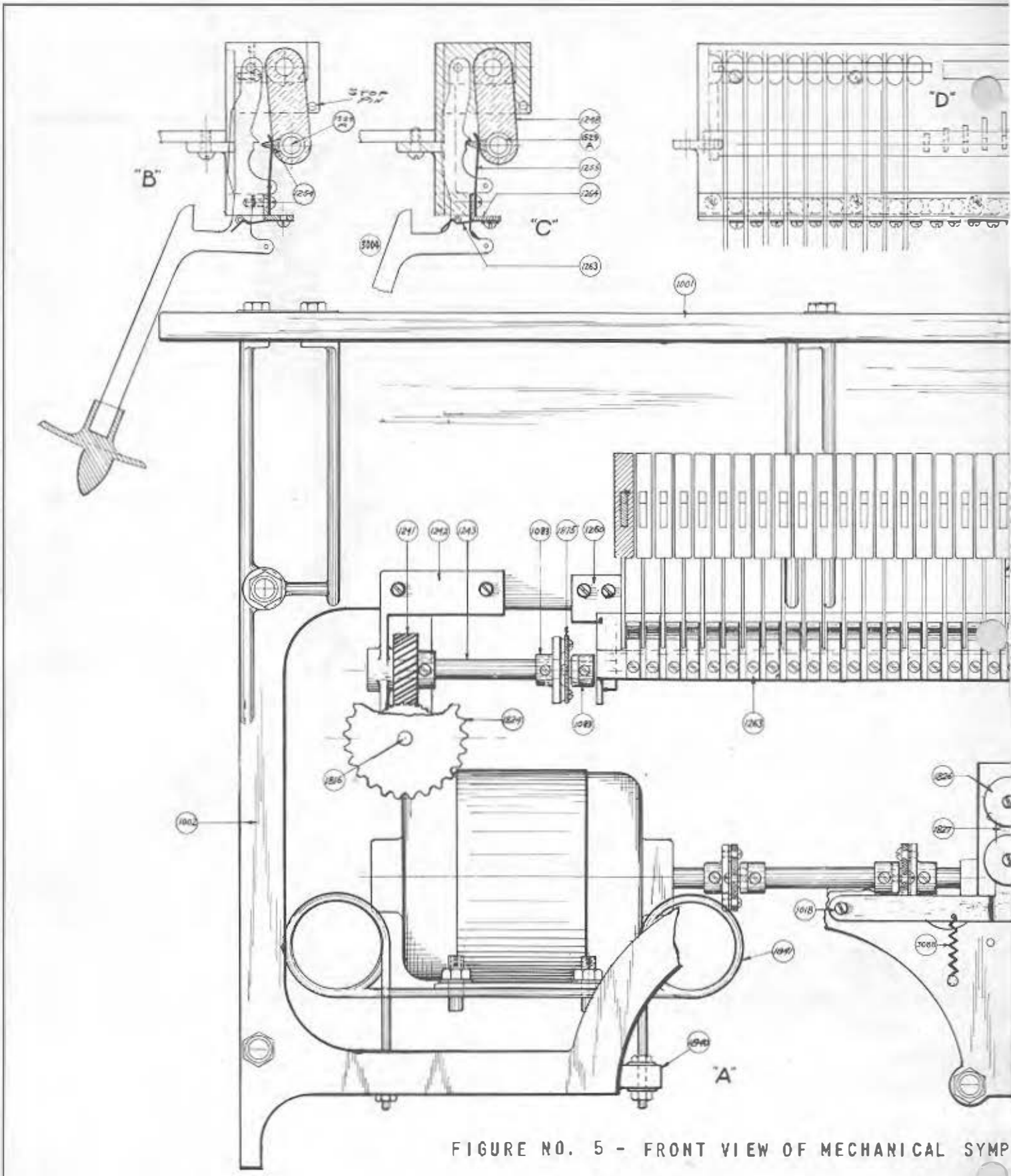

FIGURE NO. 5 - FRONT VIEW OF MECHANICAL SYMP

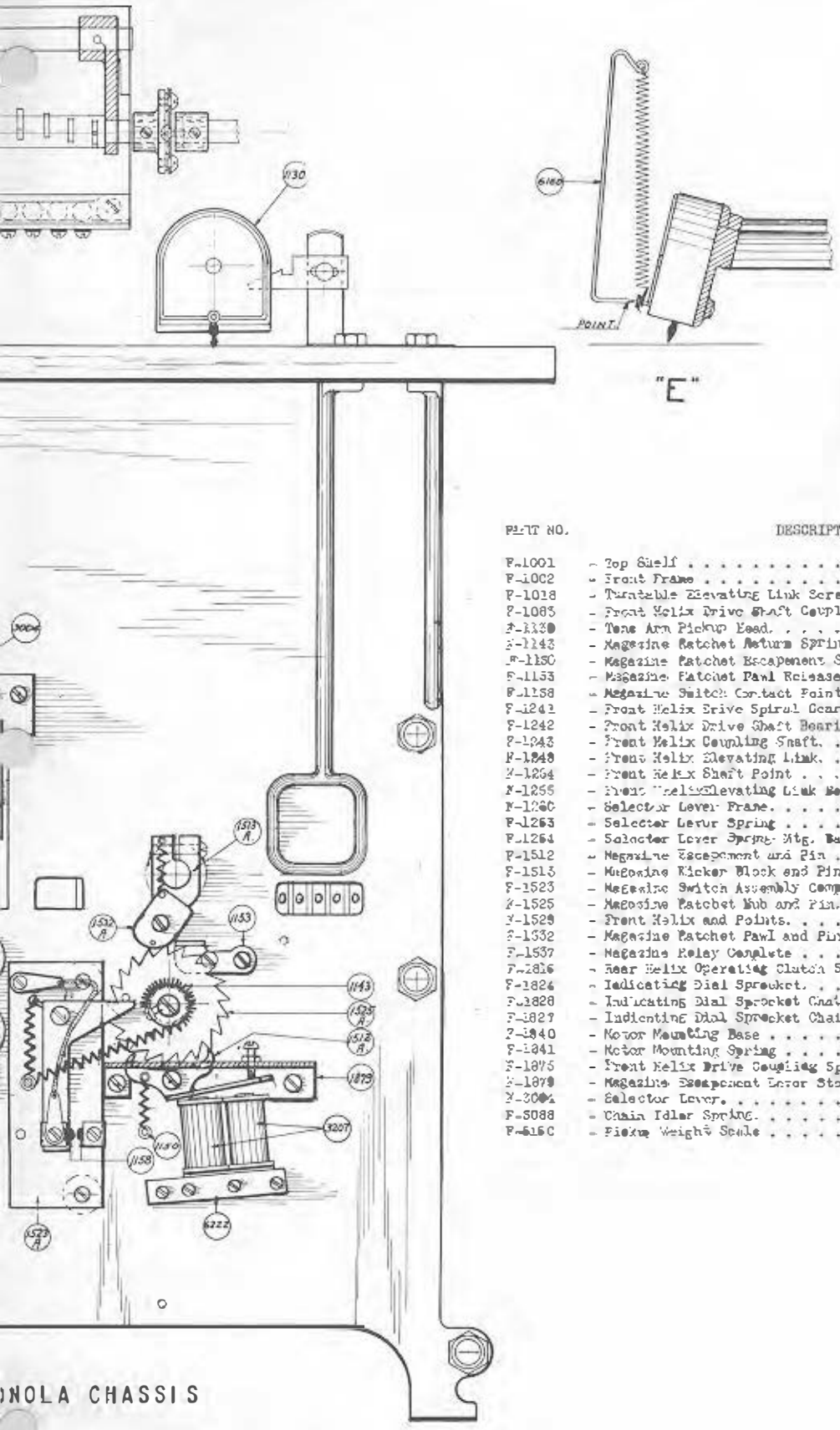

ONOLA CHASSIS

PART NO.	DESCRIPTION	NO. USED	PRICE
F-1001	- Top Shelf	1	$ 3.20
F-1002	- Front Frame	1	3.75
F-1018	- Turntable Elevating Link Screw	4	ea. .10
F-1083	- Front Helix Drive Shaft Coupling	4	ea. .15
F-1130	- Tone Arm Pickup Head	1	6.50
F-1143	- Magazine Ratchet Return Spring	1	.05
F-1150	- Magazine Ratchet Escapement Spring	1	.05
F-1153	- Magazine Ratchet Pawl Release Block	1	.10
F-1158	- Magazine Switch Contact Points	2	ea. .10
F-1241	- Front Helix Drive Spiral Gear (5/16" Hole)	1	.75
F-1242	- Front Helix Drive Shaft Bearing	1	.25
F-1243	- Front Helix Coupling Shaft	1	.10
F-1248	- Front Helix Elevating Link	2	ea. .25
F-1254	- Front Helix Shaft Point	20	ea. .05
F-1255	- Front Helix Elevating Link Booster Spring	1	.05
F-1260	- Selector Lever Frame	1	1.00
F-1263	- Selector Lever Spring	20	ea. .05
F-1264	- Selector Lever Spring Mtg. Bar	1	.15
F-1512	- Magazine Escapement and Pin	1	.25
F-1513	- Magazine Kicker Block and Pin	1	.25
F-1523	- Magazine Switch Assembly Complete	1	.75
F-1525	- Magazine Ratchet Hub and Pin	1	.50
F-1529	- Front Helix and Points	1	1.25
F-1532	- Magazine Ratchet Pawl and Pin	1	.15
F-1537	- Magazine Relay Complete	1	1.10
F-1816	- Rear Helix Operating Clutch Spindle	1	.15
F-1826	- Indicating Dial Sprocket	2	ea. .15
F-1828	- Indicating Dial Sprocket Chain Idler	2	ea. .05
F-1827	- Indicating Dial Sprocket Chain Mtg. Bracket	1	.05
F-1840	- Motor Mounting Base	1	1.10
F-1841	- Motor Mounting Spring	2	ea. .25
F-1875	- Front Helix Drive Coupling Spring	1	.05
F-1879	- Magazine Escapement Lever Stop	1	.10
F-3004	- Selector Lever	20	ea. .15
F-5088	- Chain Idler Spring	1	.05
F-6150	- Fixture Weight Scale	1	N.C.

FIGURE NO. 6 - SYMPHONO

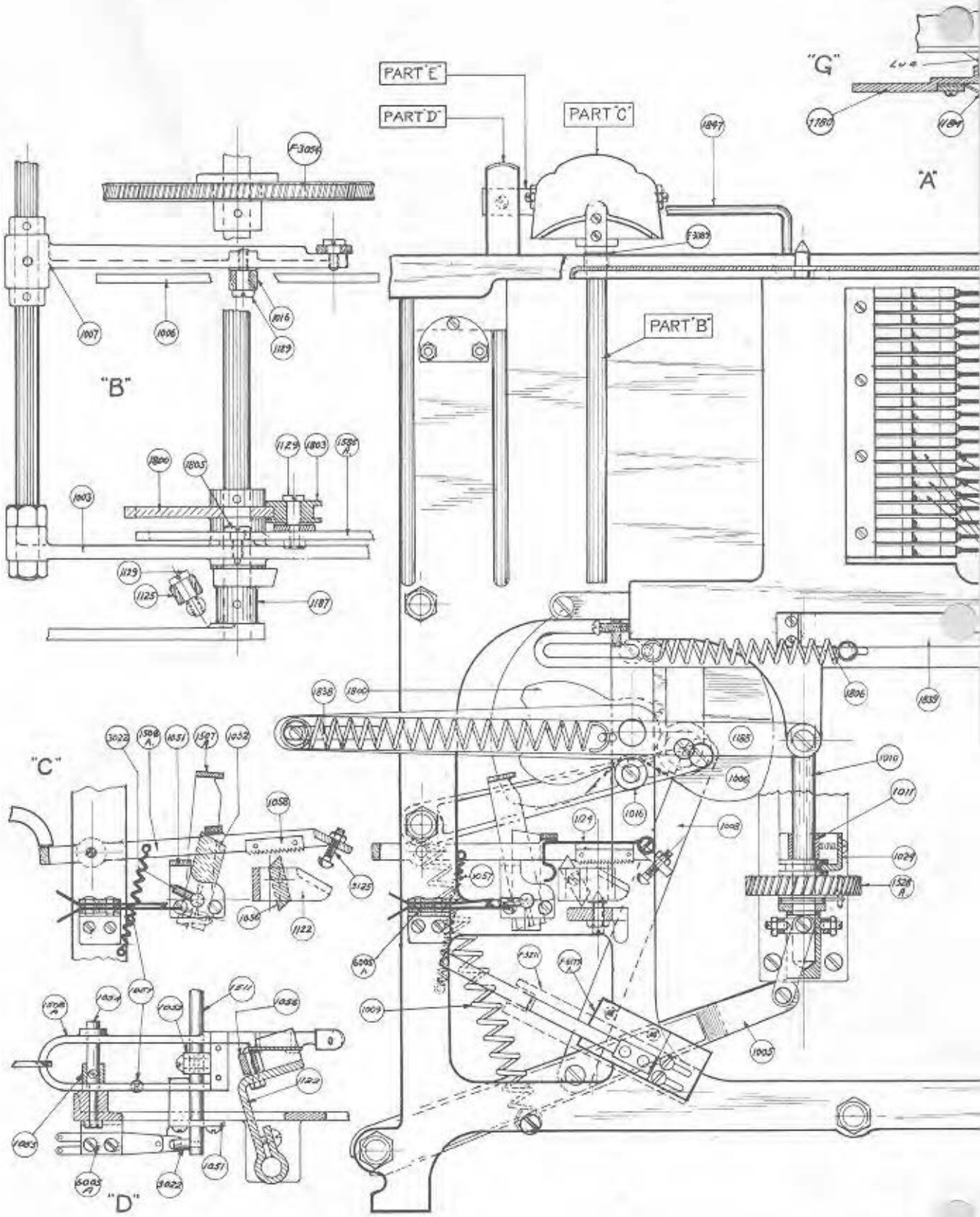

LA CHASSIS - REAR VIEW

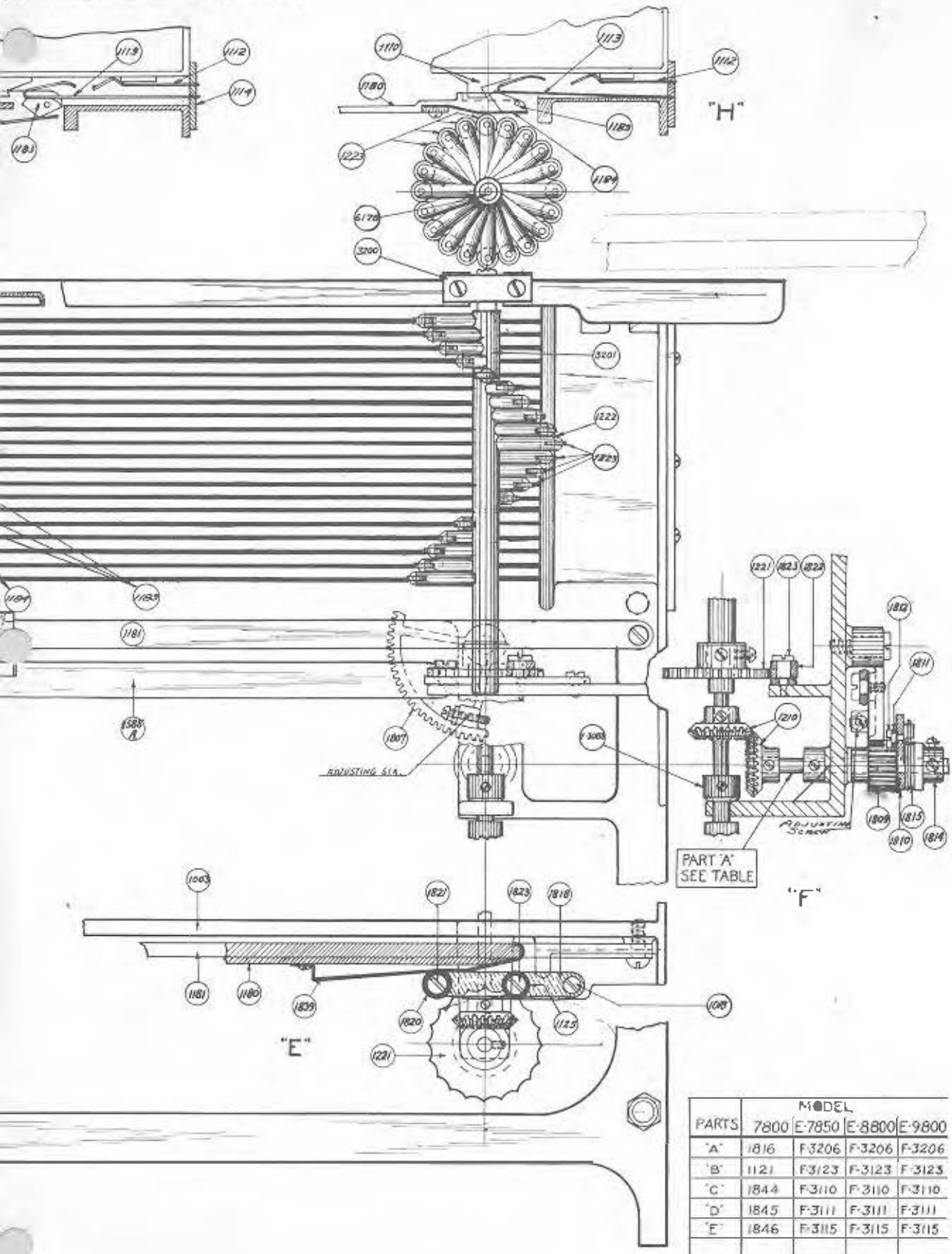

PARTS	MODEL 7800	E-7850	E-8800	E-9800
'A'	1816	F-3206	F-3206	F-3206
'B'	1121	F-3123	F-3123	F-3123
'C'	1844	F-3110	F-3110	F-3110
'D'	1845	F-3111	F-3111	F-3111
'E'	1846	F-3115	F-3115	F-3115

FIGURE NO. 8

SYMPHONOLA CHASSIS - REAR VIEW PARTS LIST

PART NO.		DESCRIPTION	NO. USED		PRICE
F-1003	-	Rear Frame	1		$ 4.20
F-1005	-	Turntable Elevating Lever	1		.75
F-1006	-	Turntable Elevating Cam	1		.35
F-1007	-	Turntable Elevating Cam Lever	1		.25
F-1008	-	Spacer Link	1		.25
F-1009	-	Elevating Lever Spring	2	ea.	.25
F-1010	-	Turntable Spindle	1		.85
F-1011	-	Elevating Turret Bearing	1		.45
F-1016	-	Turntable Lifting Cam Roller	1		.10
F-1018	-	Turntable Lifting Link Screw	1		.10
F-1024	-	Turntable Gear Retainer	1		.05
F-1051	-	Clutch Release Rod Bearing	1		.15
F-1052	-	Clutch Retaining Lever	1		.25
F-1054	-	Clutch Retaining Yoke Pivot Pin	1		.15
F-1055	-	Clutch Retaining Yoke Pivot Collar	1		.05
F-1056	-	Clutch Retaining Release Pawl	1		.15
F-1057	-	Clutch Retaining Yoke Tension Spring	1		.05
F-1058	-	Clutch Retaining Yoke Pack	1		.15
F-1110	-	Record Tray	20		.50
F-1112	-	Record Tray Lock Spring	20	Assemb.	.60
F-1113	-	Record Tray Selector Slide Pawl Spring	20		
F-1114	-	Record Tray Lock Spring Plate	1		
F-1121	-	Tone Arm Spindle	1		.15
F-1122	-	Tone Arm Trip Off Lever	1		.25
F-1124	-	Tone Arm Booster Spring	1		.10
F-1125	-	Tone Arm Cam Roller	2	ea.	.05
F-1128	-	Tone Arm Cam Roller Screw	2	ea.	.05
F-1180	-	Selector Slide (Casting Only)	1		.60
F-1181	-	Selector Slide Rail	1		.35
F-1183	-	Selector Slide Pawl	20	ea.	.05
F-1184	-	Selector Slide Pawl Spring	1		.25
F-1187	-	Selector Slide Crank	1		.30
F-1188	-	Selector Slide Connecting Rod	1		.25
F-1210	-	Selector Bevel Gear	2	ea.	.55
F-1221	-	Rear Helix Lock Sprocket	1		.25
F-1222	-	Helix Stud	20	Part of Rear Helix	
F-1223	-	Rear Helix Stud Roller	20		
F-1507	-	Transmission Clutch Release Lever	1		.25
F-1508	-	Transmission Retaining Yoke Pack and Plate	1		.30
F-1511	-	Transmission Clutch Release Rod and Pins	1		.50
F-1528	-	Turntable Drive Gear Hub and Pin	1		1.00
F-1585	-	Rear Helix Cam, Rod and Arm	1		.75
F-1800	-	Rear Helix Operating Cam	1		.25
F-1805	-	Rear Helix Lock Link Arm Roller	1		.10
F-1806	-	Rear Helix Lock Link Guide Screw	2	ea.	.10
F-1808	-	Rear Helix Lock Link Spring	1		.15
F-1807	-	Rear Helix Operating Segment Gear	1		.25
F-1809	-	Rear Helix Operating Pinion	1		.10
F-1810	-	Rear Helix Operating Ratchet Flange	1		.10
F-1811	-	Rear Helix Operating Ratchet Pawl	1		.05
F-1812	-	Rear Helix Operating Ratchet Pawl Screw	1		.05
F-1814	-	Rear Helix Operating Clutch Body	1		.25
F-1815	-	Rear Helix Operating Clutch Spring	2	ea.	.10
F-1816	-	Rear Helix Operating Clutch Spindle	1		.15
F-1818	-	Rear Helix Lock Lever	1		.05
F-1820	-	Rear Helix Lock Lever Operating Roller	1		.05
F-1821	-	Rear Helix Lock Lever Operating Roller Screw	1		.05
F-1822	-	Rear Helix Sprocket Locking Roller	1		.05
F-1825	-	Rear Helix Sprocket Locking Roller Screw	1		.05
F-1858	-	Rear Helix Selector Slide Connecting Spring	1		.10
F-1859	-	Rear Helix Lock Lever Actuating Spring	1		.05
F-1044	-	Tone Arm (Casting Only)	1		1.25
F-1045	-	Tone Arm Post	1		.50
F-1046	-	Tone Arm Catch	1		.10
F-1047	-	Tone Arm Rest	1		.25
F-3022	-	Stud	1		.05
F-3003	-	Thrust Collar	1		.10
F-5054	-	Cam Shaft Drive Gear	1		2.50
F-5089	-	Tone Arm Spindle Felt Bushing	1		.05
F-5110	-	Tone Arm Light Weight Pick-Up	1		1.35
F-5111	-	Tone Arm Rest Post	1		.35
F-5113	-	Tone Arm Catch	1		.10
F-5123	-	Tone Arm Rod	1		.15
F-5125	-	Clutch Retaining Yoke Adj. Screw	1		.05
F-5200	-	Rear Helix Upper Bearing	1		.10
F-5201	-	Rear Helix Shaft	1	Part of F-6173	
F-5203	-	Motor Carryover Switch	1		.35
F-5206	-	Rear Helix Drive Spindle	1		.15
F-5211	-	Motor Switch Shield	1		.15
F-6005	-	Switch Assembly	1		.15
F-6178	-	Rear Helix Assembly	1		1.60

FIGURE NO. 7 - SYMPHON

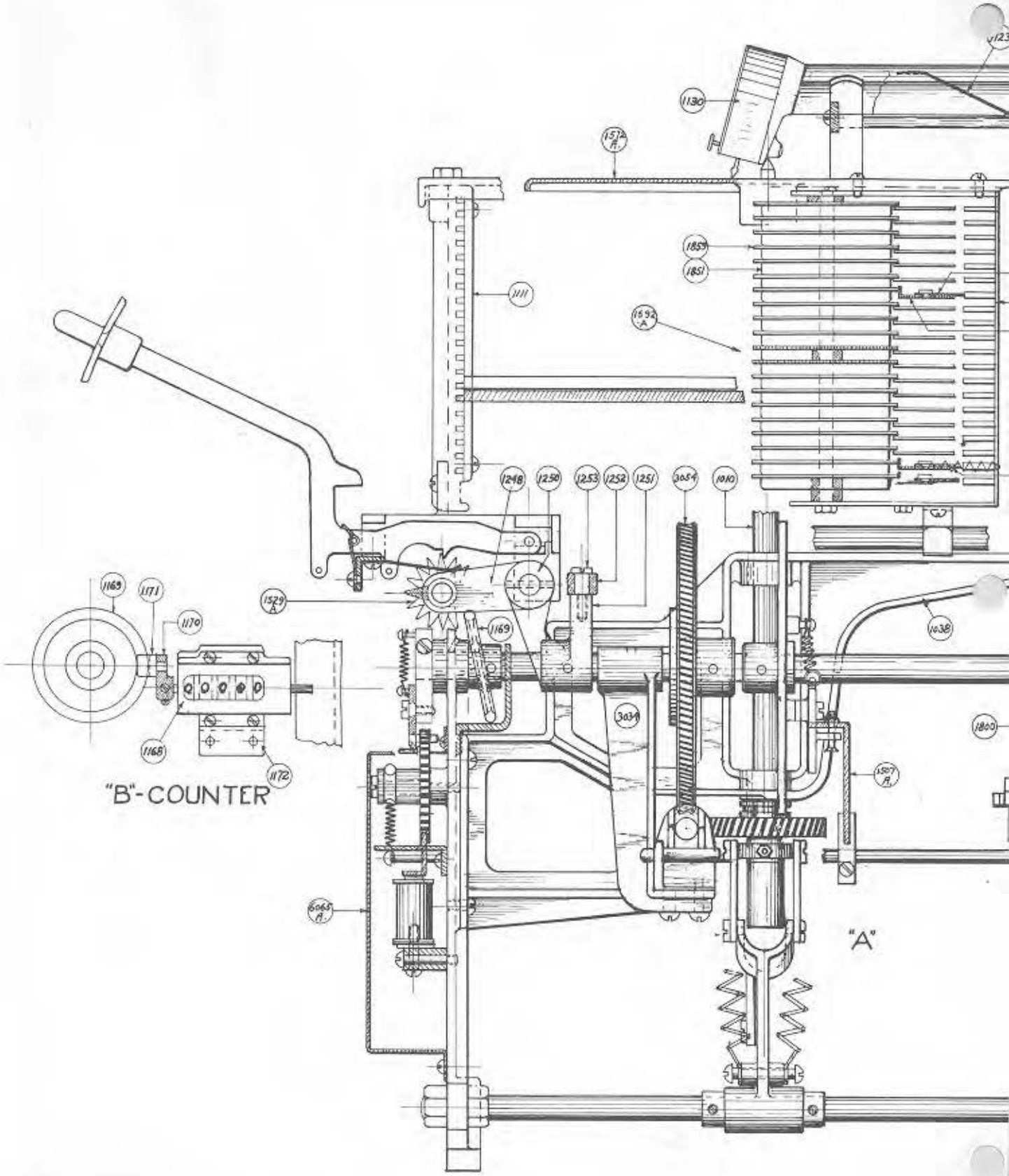

DLA CHASSIS - END VIEW

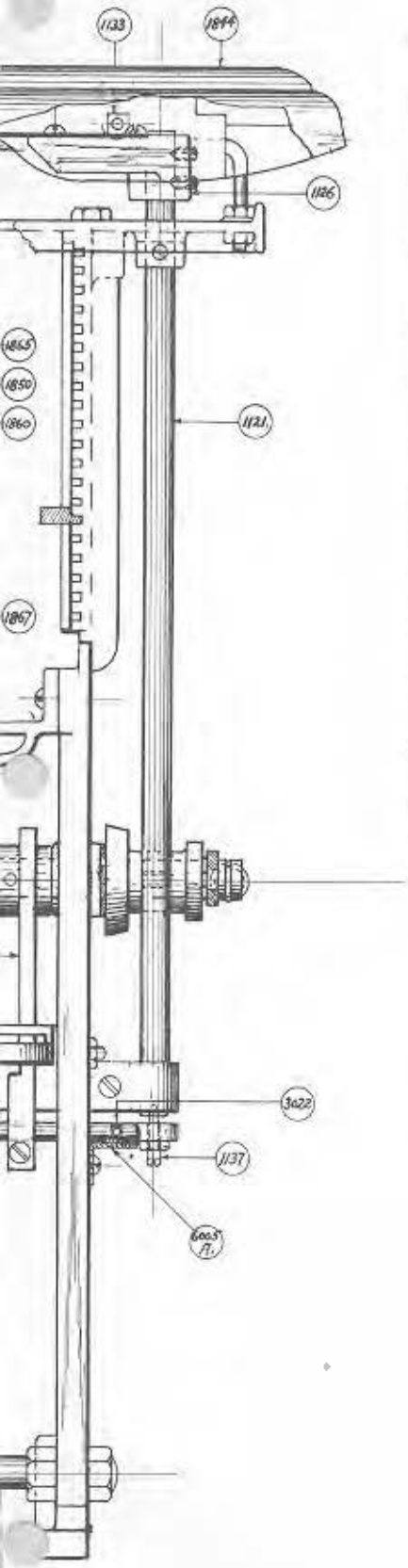

PART NO.		DESCRIPTION	NO. USED		PRICE
F-1010	-	Turntable Spindle.	1		$ .65
F-1038	-	Turntable Spindle Bracket.	1		1.10
F-1111	-	Record Tray Stop	2	ea.	.15
F-1121	-	Tone Arm Spindle	1		.15
F-1123	-	Tone Arm Balance Spring.	1		.15
F-1126	-	Tone Arm Balance Spring Mounting Block	1		.25
F-1130	-	Tone Arm Pickup Head	1		6.50
F-1135	-	Tone Arm Pivot Block	1		.15
F-1137	-	Tone Arm Pivot Spindle Screw	1		.05
F-1168	-	Magazine Feeder Counter.	1		1.50
F-1169	-	Magazine Counter Operating Cam	1		.15
F-1170	-	Magazine Counter Operating Crank	1		.10
F-1171	-	Magazine Counter Operating Swivel.	1		.10
F-1172	-	Magazine Counter Mounting Bracket.	1		.15
F-1246	-	Front Helix Elevating Link	2	ea.	.25
F-1250	-	Front Helix Cancelling Lever	1		.25
F-1251	-	Front Helix Cancelling Cam	1		.30
F-1252	-	Front Helix Cancelling Cam Roller.	1		.05
F-1253	-	Front Helix Cancelling Cam Roller Screw.	1		.05
F-1507	-	Transmission Clutch Release Lever.	1		.25
F-1572	-	Turntable Assembly	1		.75
F-1800	-	Rear Helix Operating Cam	1		.25
F-1844	-	Tone Arm	1		1.25
F-1850	-	Record Counter Frame	1		
F-1851	-	Record Counter Dial.	20		
F-1859	-	Record Counter Ratchet	20	Complete Assembly F-1592	7.50
F-1860	-	Record Counter Escapement.	20		
F-1865	-	Record Counter Escapement Spring	20		
F-3022	-	Stud (Shorting Switch)	1		.05
F-3034	-	Transmission Bearing Support	1		.25
F-3054	-	Cam Shaft Drive Worm Gear.	1		2.50
F-5005	-	Shorting Switch.	1		.15
F-6062	-	Front Helix Shaft Assembly	1		1.25
F-6065	-	Magazine Cover Assembly.	1		.35

"C"-FRONT VIEW- LEVER ASSEMBLY

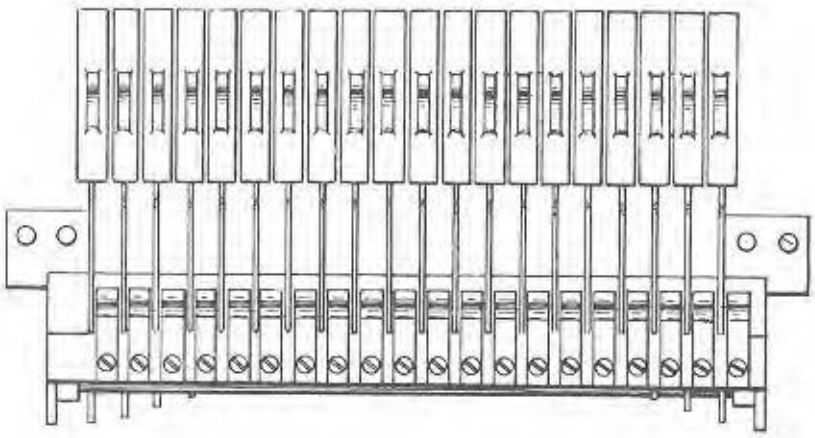

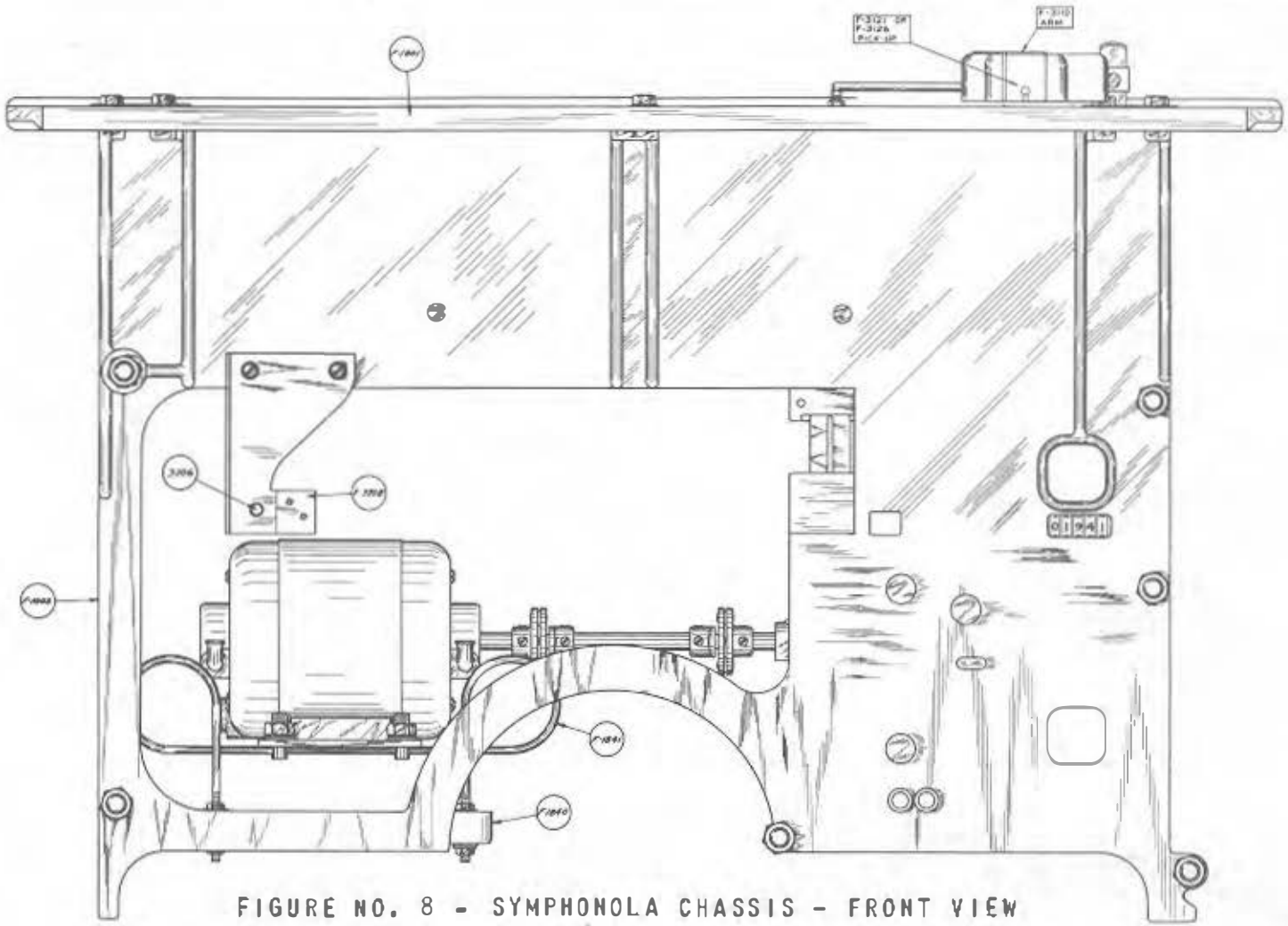

FIGURE NO. 8 - SYMPHONOLA CHASSIS - FRONT VIEW

PART NO.		DESCRIPTION	NO. USED	PRICE
F-1001	-	Top Shelf.	1	$3.20
F-1002	-	Front Frame.	1	3.75
F-1840	-	Motor Mounting Base.	1	1.10
F-1841	-	Motor Mounting Spring.	1	.25
F-3110	-	Tone-Arm - Light Weight Pick-UP.	1	1.35
F-3121-W	-	Pick-Up Head - Light Weight Pick-Up.	1	6.00
F-3126-A	-	Pick-UP Head - Light Weight Pick-Up.	1	6.00
F-3206	-	Rear Helix Drive Spindle	1	.15
F-3208	-	Selector Helix Spindle Bearing	1	.20

FIGURE NO. 9 - SCHEMATIC DIAGRAM FOR TYPE 825-10 AMPLIFIER

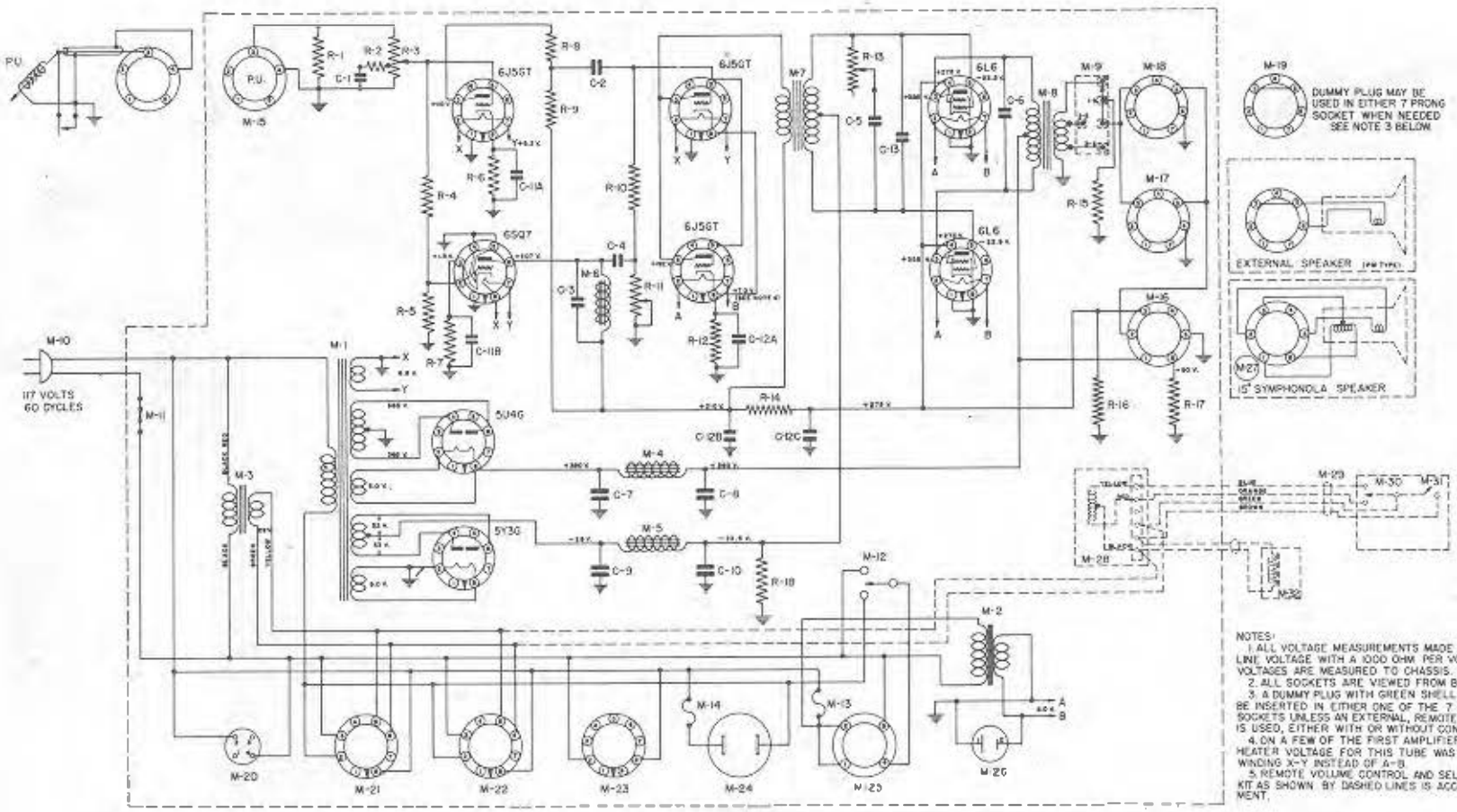

NOTES:

1. ALL VOLTAGE MEASUREMENTS MADE AT 117 VOLTS LINE VOLTAGE WITH A 1000 OHM PER VOLT VOLTMETER. VOLTAGES ARE MEASURED TO CHASSIS.
2. ALL SOCKETS ARE VIEWED FROM BOTTOM.
3. A DUMMY PLUG WITH GREEN SHELL SHOULD ALWAYS BE INSERTED IN EITHER ONE OF THE 7 PRONG SPEAKER SOCKETS UNLESS AN EXTERNAL, REMOTE WIRED SPEAKER IS USED, EITHER WITH OR WITHOUT CONTROL BOX.
4. ON A FEW OF THE FIRST AMPLIFIERS MADE, THE HEATER VOLTAGE FOR THIS TUBE WAS OBTAINED FROM WINDING X-Y INSTEAD OF A-B.
5. REMOTE VOLUME CONTROL AND SELECTION CANCEL KIT AS SHOWN BY DASHED LINES IS ACCESSORY EQUIPMENT.

FIGURE NO. 9

SCHEMATIC DIAGRAM FOR TYPE 825-10 AMPLIFIER

ITEM	PART NO.		DESCRIPTION	PRICE
			RESISTORS	
R-1	82433	-	5,600 Ohms 1/2 Watt 10%	$ .07
R-2	82462	-	500 Ohms 1/2 Watt 10%	.07
R-3	P-3076	-	16,000 Ohm Volume Control	.75
R-4	82613	-	24,000 Ohms 1/2 Watt 5%	.07
R-5	82606	-	75,000 Ohms 1/2 Watt 5%	.07
R-6	82433	-	5,600 Ohms 1/2 Watt 10%	.07
R-7	82428	-	2,200 Ohms 1/2 Watt 10%	.07
R-8	82443	-	39,000 Ohms 1/2 Watt 10%	.07
R-9	82443	-	39,000 Ohms 1/2 Watt 10%	.07
R-10	82443	-	39,000 Ohms 1/2 Watt 10%	.07
R-11	10039	-	100,000 Ohms Variable Bass Control	.75
R-12	82423	-	820 Ohms 1/2 Watt 10%	.07
R-13	10688	-	1 Megohm Variable Treble Control	.75
R-14	82483	-	6,800 Ohms 1/2 Watt 10%	.07
R-15	81039	-	20 Ohms 5 Watts 10% (Wire Wound)	.20
R-16	81041	-	11,000 Ohms 10 Watts 20% (Wire Wound)	.25
R-17	81040	-	2,000 Ohms 10 Watts 10% (Wire Wound)	.25
R-18	82719	-	650 Ohms 1 Watt 5%	.15
			PAPER CONDENSERS	
C-1	86043	-	.25 Mfd. 200 Volts	.15
C-2	86031	-	.02 Mfd. 400 Volts	.10
C-3	86008	-	.1 Mfd. 200 Volts	.1
C-4	86013	-	.05 Mfd. 400 Volts	.1
C-5	86031	-	.02 Mfd. 400 Volts	.1
C-6	86070	-	.01 Mfd. 1000 Volts	.10
			ELECTROLYTIC CONDENSERS	
C-7	87542	-	16 Mfd. 475 Volts Wet	1.00
C-8	87541	-	18 Mfd. 475 Volts Wet	1.00
C-9	87513	-	12 Mfd. 150 Volts Dry	.35
C-10	87513	-	12 Mfd. 150 Volts Dry	.35
C-11-A	87502	-	20 Mfd. 25 Volts Dry	.75
C-11-B		-	20 Mfd. 25 Volts Dry	
C-12-A	87530	-	20 Mfd. 25 Volts Dry	1.25
C-12-B		-	20 Mfd. 450 Volts Dry	
C-12-C		-	20 Mfd. 450 Volts Dry	
			MICA CONDENSERS	
C-13	85010	-	.0015 Mfd. 1500 Mmf. 10%	.20
			MISCELLANEOUS	
M-1	12059	-	Power Transformer	4.50
M-2	12060	-	6 Volt Transformer	2.50
M-3	12063	-	25 Volt Transformer	5.00
M-4	11516	-	Filter Choke	1.50
M-5	10791	-	Bias Choke	.65
M-6	12065	-	Bass Choke	1.25
M-7	12084	-	Input Transformer	1.75
M-8	12217	-	Output Transformer	2.25
M-9	12216	-	Speaker Matching Panel	.20
M-10	P-1369	-	16 Ft. Line Cord and Plug	.85
M-10	12077	-	2 Ft. Line Cord and Plug	.25
M-11	P-1349	-	Main Switch	.35
M-12	12031	-	Light Switch	.45
M-13	P-7846	-	2-1/2 Amp. Light Fuse	.10
M-14	14173	-	2.5 Amp. Non-tamperable Motor Fuse	.25
M-15	84203	-	Pickup Socket	.10
M-16	84201	-	Socket for Symphonola Speaker	.10
M-17	84200	-	Socket for Wired Remote Speaker	.15
M-18	4200	-	Socket for Wired Remote Speaker	.15
M-19	11367	-	Dummy Plug (Green Shell)	.25
M-20	12032	-	Socket for Transmitter Output	.15
M-22	84246	-	Socket for Power to Transmitter	.10
M-22	84248	-	Socket for Power to Solenoid Drum	.10
M-23	84244	-	Socket for Power to Remote Control Equipment	.10
M-24	11401	-	Motor Receptacle	.20
M-25	84222	-	Socket for Lighting Transformer	.10
M-26	P-8897	-	Socket for Elec. Selector Lights	.15
M-27	P-9024	-	15" Symphonola Speaker	11.00
M-28	12108	-	Remote Volume Control Motor	8.75
M-29	14215	-	Remote Volume Control Cable per foot	.07
M-30	12106	-	Remote Volume Control Switch	.55
M-31	12105	-	Remote Selection Cancel Switch	.45
M-32	14121	-	Remote Selection Cancel Relay	1.25

FIGURE NO. 10 - FRONT VIEW OF TYPE 825-10 AMPLIFIER

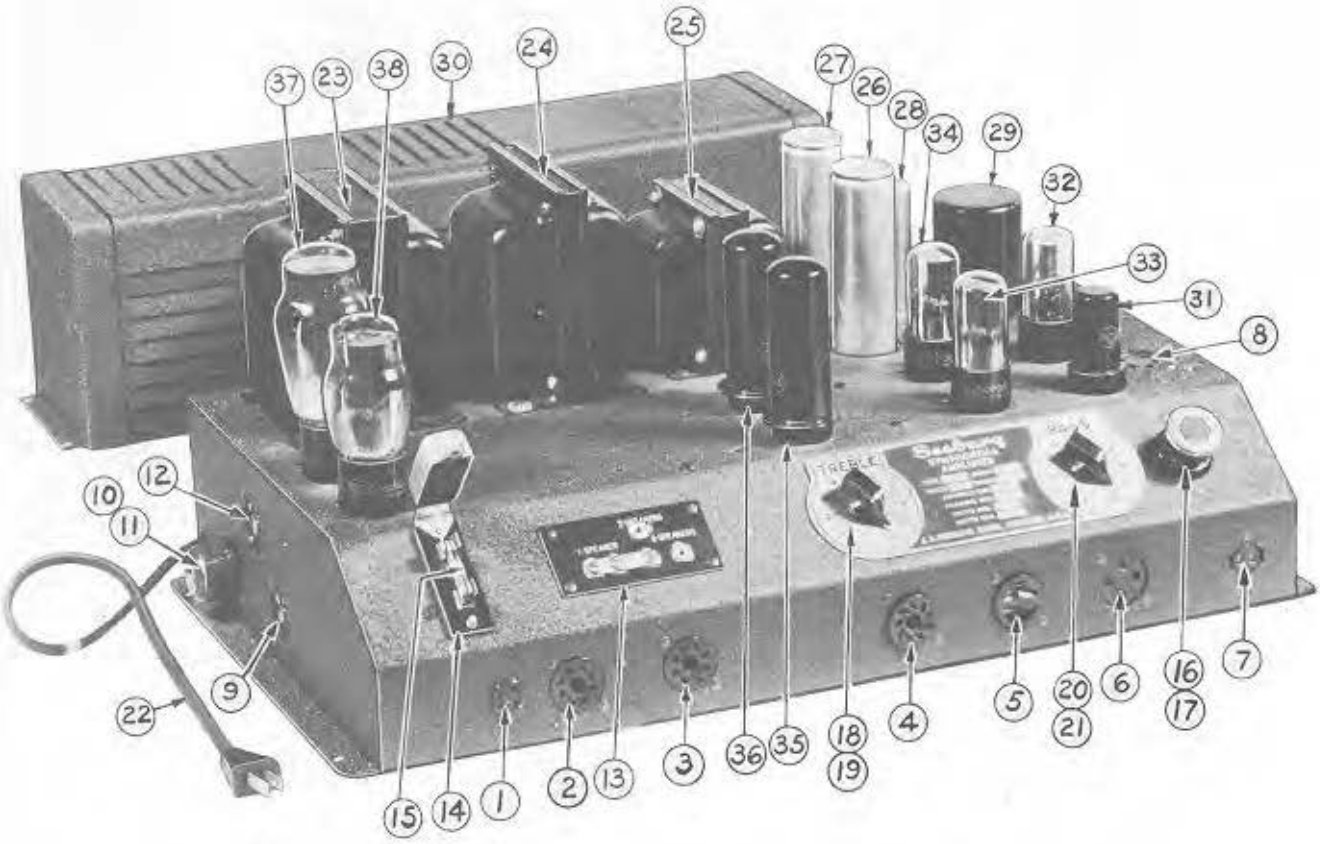

ITEM	PART NO.	DESCRIPTION	PRICE
1	12032	- Small 4 Contact Socket .	$ .15
2	84248	- Octal Socket	.10
3	84248	- Octal Socket	.10
4	84244	- 9 Contact Socket	.10
5	11401	- 2 Prong Receptacle . . .	.20
6	84222	- 4 Contact Socket	.10
7	F-8897	- Small Polarized 2 Contact Socket.	.15
8	84203	- 5 Contact Pickup Socket.	.10
9	84201	- 6 Contact Speaker Socket	.10
10	11567	- Dummy Plug	.25
11	84200	- 7 Contact Speaker Socket	.15
12	84200	- 7 Contact Speaker Socket	.15
13	12216	- Speaker Matching Panel .	.20
14	12030	- Light Fuse Receptacle. .	.25
15	F-7846	- 2-1/2 Amp. Fuse.	.10
16	14175	- 2-1/2 Amp. Non-tamperable Fuse Socket	.40
17	14175	- 2-1/2 Amp. Non-tamperable Fuse. . . .	.25
18	10056	- Control Knob	.10
19	10688	- Treble Control	.75
20	10056	- Control Knob	.10
21	10039	- Bass Control	$ .75
22	12077	- 2 Ft. Power Cord & Plug.	.25
23	12059	- Power Transformer. . . .	4.50
24	12065	- 25 Volt Transformer. . .	3.00
25	12060	- 6 Volt Transformer . . .	2.50
26	87542	- 16 Mfd. 475 Volt Wet Electrolytic Condenser	1.00
27	87541	- 16 Mfd. 475 Volt Wet Electrolytic Condenser	1.00
28	87530	- Dual 20 Mfd. 450 Volt, Single 20 Mfd. 25 Volt Dry Electrolytic Condenser	1.25
29	12065	- Bass Choke	1.25
30	12037	- Transformer Housing. . .	1.50
31		- Type 6SQ7 Tube	.64
32		- Type 6J5GT Tube.	.68
33		- Type 6J5GT Tube.	.68
34		- Type 6J5GT Tube.	.68
35		- Type 6L6 Tube.	1.29
36		- Type 6L6 Tube.	1.29
37		- Type 5U4G Tube	.64
38		- Type 5Y3G Tube	.44

FIGURE NO. 11 - BOTTOM VIEW OF TYPE 825-10 AMPLIFIER

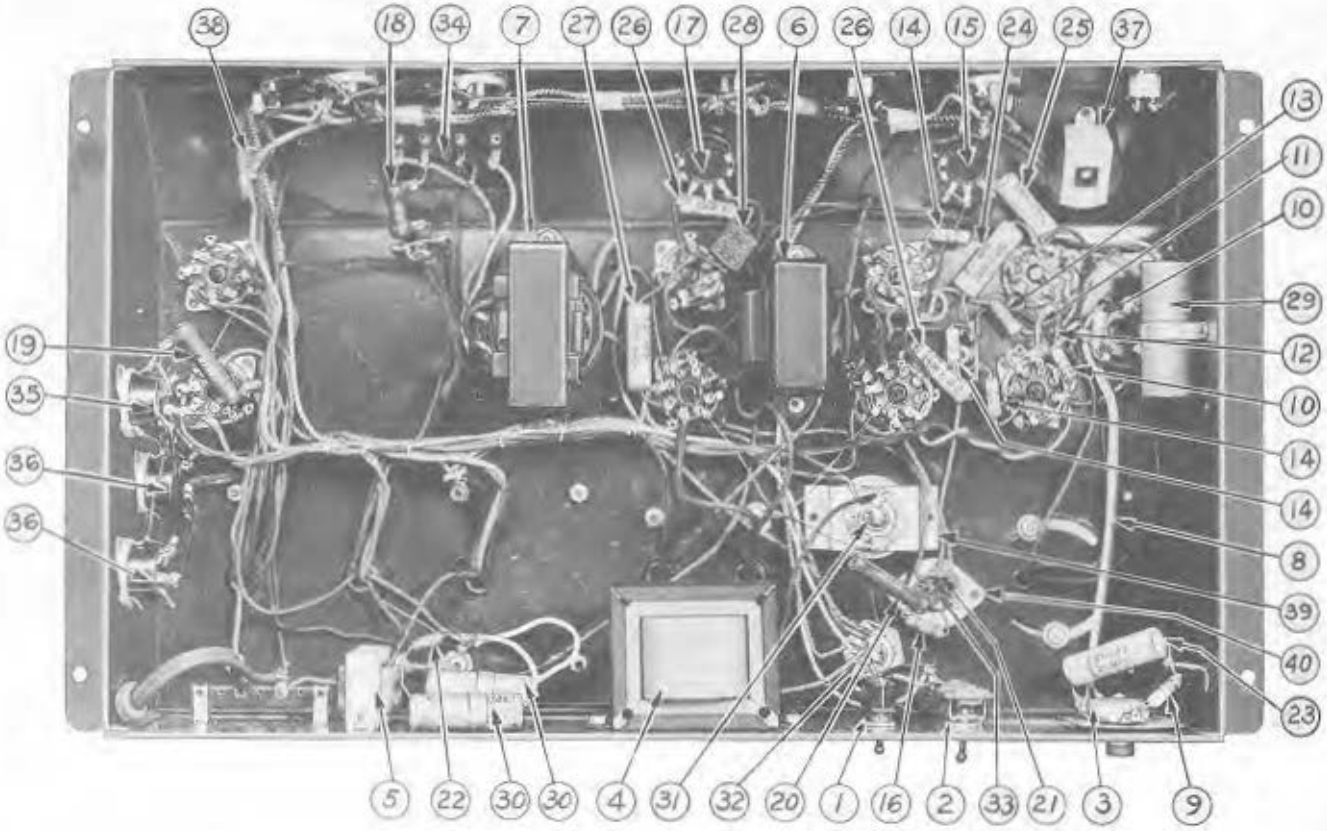

ITEM	PART NO.	REQ.	DESCRIPTION	PRICE
1	R-1349	1 -	Main Switch	$ .35
2	12031	1 -	Light Switch.	.45
3	P-3074	1 -	16,000 Ohm Volume Control .	.75
4	L1315	1 -	Filter Choke.	1.50
5	10781	1 -	Bias Choke.	.65
6	12034	1 -	Input Transformer	1.75
7	12817	1 -	Output Transformer.	2.25
8	11304	1 -	Shielded Input Lead	.10
9	82482	1 -	500 Ohms, 1/2 Watt, 10% Resistor.	.07
10	82433	2 -	5,600 Ohms, 1/2 Watt, 10% Resistor. . . . . ea.	.07
11	82606	1 -	75,000 Ohms, 1/2 Watt, 5% Resistor.	.07
12	82615	1 -	24,000 Ohms, 1/2 Watt, 5% Resistor.	.07
13	82428	1 -	2,200 Ohms, 1/2 Watt, 10% Resistor.	.07
14	82443	3 -	39,000 Ohms, 1/2 Watt, 10% Resistor. . . . . ea.	.07
16	10059	1 -	100,000 Ohms Variable Bass Control	.75
16	82423	1 -	820 Ohms, 1/2 Watt, 10% Resistor.	.07
17	10580	1 -	1 Megohm Variable Treble Control	.75
18	81039	1 -	20 Ohms, 5 Watt, 10% Resistor Wire Wound . . .	.20
19	81040	1 -	2,000 Ohms, 10 Watt, 10% Resistor Wire Wound . . .	.25
20	81041	1 -	11,000 Ohms, 10 Watt, 10% Resistor Wire Wound . . .	.25
21	82483	1	6,800 Ohms, 1/2 Watt, 10% Resistor.	.07
22	82718	1 -	650 Ohms, 1 Watt, 5% Resistor.	.15
23	86043	1 -	.25 Mfd., 200 Volt Paper Condenser . . . . . $	.15
24	86008	1 -	.1 Mfd., 200 Volt Paper Condenser	.10
25	86213	1 -	.05 Mfd., 400 Volt Paper Condenser	.10
26	86031	2 -	.02 Mfd., 400 Volt Paper Condenser . . . . . ea.	.10
27	88070	1 -	.01 Mfd., 1000 Volt Paper Condenser	.10
28	85010	1 -	.0015 Mfd. (1500 Mmf.) 10% Mica Condenser	.20
29	87512	1 -	Dual 20 Mfd., 25 Volt Dry Electrolytic Condenser . .	.75
30	87513	2 -	12 Mfd., 150 Volt Dry Electrolytic Condenser . . ea.	.35
31	87542	1 -	16 Mfd., 475 Volt Wet Electrolytic Condenser . .	1.00
32	87541	1 -	16 Mfd., 475 Volt Wet Electrolytic Condenser . .	1.00
33	87530	1 -	Dual 20 Mfd., 450 Volt, Single 20 Mfd., 25 Volt Dry Electrolytic Condenser	1.25
34	12216	1 -	Speaker Matching Panel . . .	.20
35	84201	1 -	6 Prong Speaker Socket . . .	.10
36	84200	2 -	7 Prong Speaker Socket . . . ea.	.15
37	14175	1 -	2.5 Amp. Non-temperable Fuse Receptacle	.20
38	12050	1 -	Light Fuse Receptacle with Cover.	.25
39	12055	1 -	Electrolytic Mounting Bracket.	.10
40	10832	1 -	Electrolytic Mounting Plate.	.06

FIGURE NO. 12 - SCHEMATIC DIAGRAM FOR TYPE 825-5 AMPLIFIER

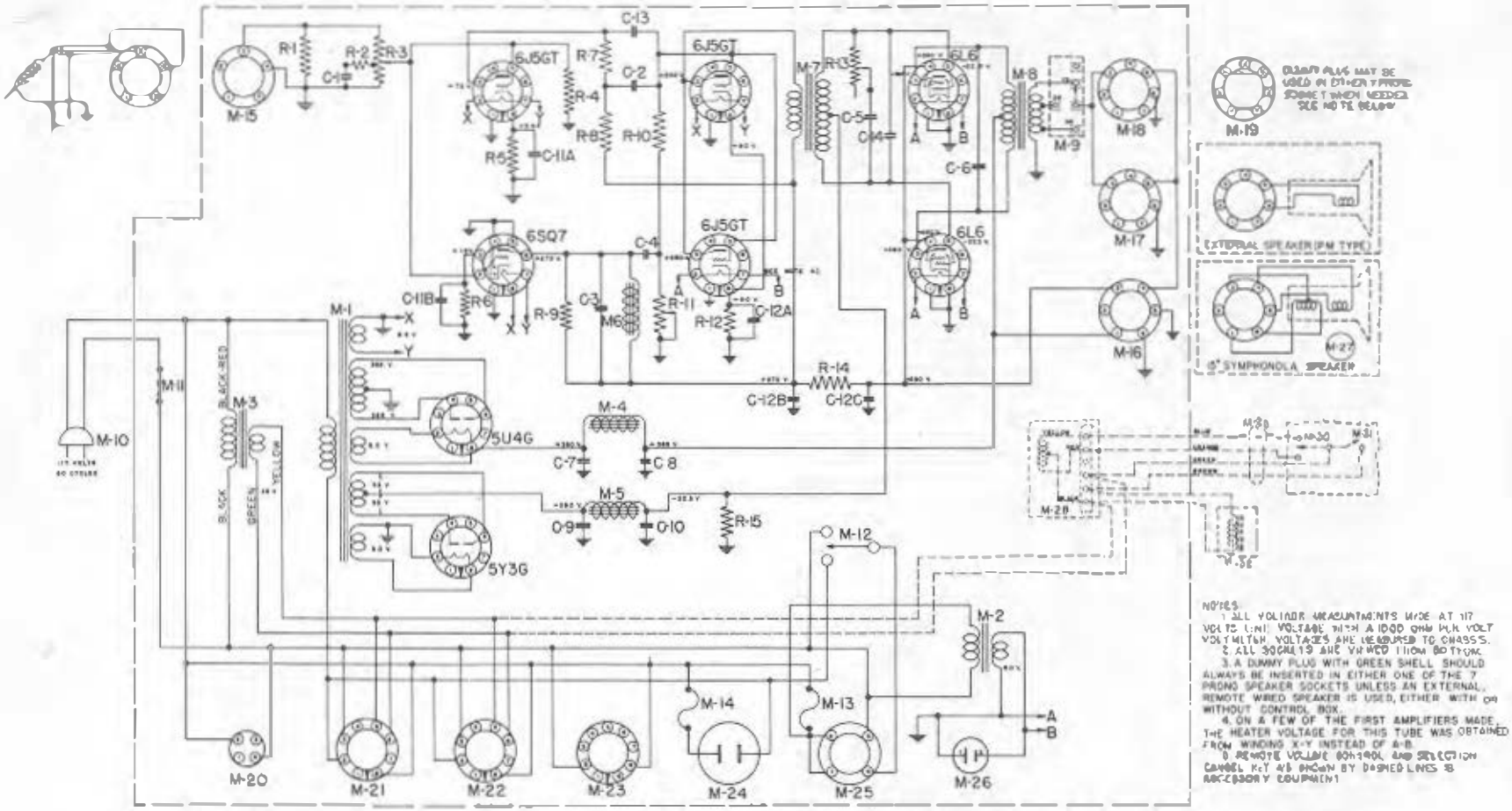

FIGURE NO. 12

SCHEMATIC DIAGRAM FOR TYPE 825-5 AMPLIFIER

ITEM	PART NO.		DESCRIPTION	PRICE
			RESISTORS	
R-1	82435	-	5,600 Ohms 1/2 Watt 10%	$ .07
R-2	82482	-	500 Ohms 1/2 Watt 10%	.07
R-3	F-3076	-	16,000 Ohms Volume Control	.75
R-4	82448	-	100,000 Ohms 1/2 Watt 10%	.07
R-5	82433	-	5,600 Ohms 1/2 Watt 10%	.07
R-6	82428	-	2,200 Ohms 1/2 Watt 10%	.07
R-7	82443	-	39,000 Ohms 1/2 Watt 10%	.07
R-8	82452	-	220,000 Ohms 1/2 Watt 10%	.07
R-9	82449	-	100,000 Ohms 1/2 Watt 10%	.07
R-10	82443	-	39,000 Ohms 1/2 Watt 10%	.07
R-11	10039	-	100,000 Ohms Variable Bass Control	.75
R-12	82423	-	820 Ohms 1/2 Watt 10%	.07
R-13	10688	-	1 Megohm Variable Treble Control	.75
R-14	82424	-	1000 Ohms 1/2 Watt 10%	.07
R-15	82718	-	650 Ohms 1 Watt 5%	.15
			PAPER CONDENSERS	
C-1	86043	-	.25 Mfd. 200 Volts	.15
C-2	86031	-	.02 Mfd. 400 Volts	.10
C-3	86008	-	.1 Mfd. 200 Volts	.10
C-4	86013	-	.05 Mfd. 400 Volts	.10
C-5	86031	-	.02 Mfd. 400 Volts	.10
C-6	86069	-	.005 Mfd. 1000 Volts	.10
			ELECTROLYTIC CONDENSERS	
C-7	87542	-	16 Mfd. 475 Volts Wet	1.00
C-8	87541	-	16 Mfd. 475 Volts Wet	1.00
C-9	87513	-	12 Mfd. 150 Volts Dry	.35
C-10	87513	-	12 Mfd. 150 Volts Dry	.35
C-11-A	87512	-	20 Mfd. 25 Volts Dry	.75
C-11-B		-	20 Mfd. 25 Volts Dry	
C-12-A	87530	-	20 Mfd. 25 Volts Dry	1.25
C-12-B		-	20 Mfd. 450 Volts Dry	
C-12-C		-	20 Mfd. 450 Volts Dry	
			MICA CONDENSERS	
C-13	85016	-	.002 Mfd. 2000 Mmf. 10%	.20
C-14	85010	-	.0015 Mfd. 1500 Mmf. 10%	.20
			MISCELLANEOUS	
M-1	12059	-	Power Transformer	4.50
M-2	12060	-	6 Volt Transformer	2.50
M-3	12063	-	25 Volt Transformer	3.00
M-4	11316	-	Filter Choke	1.50
M-5	10791	-	Bias Choke	.65
M-6	12063	-	Bass Choke	1.25
M-7	12064	-	Input Transformer	1.75
M-8	12056	-	Output Transformer	3.25
M-9	12216	-	Speaker Matching Panel	.20
M-10	P-1369	-	16 Ft. Line Cord and Plug	.85
M-10	12077	-	2 Ft. Line Cord and Plug	.25
M-11	F-1342	-	Main Switch	.35
M-12	12031	-	Light Switch	.45
M-13	F-7846	-	2-1/2 Amp. Light Fuse	.10
M-14	14175	-	2.5 Amp. Non-temperable Motor Fuse	.25
M-15	84205	-	Pickup Socket	.10
M-16	84201	-	Socket for Symphonola Speaker	.10
M-17	84200	-	Socket for Wired Remote Speaker	.15
M-18	84200	-	Socket for Wired Remote Speaker	.15
M-19	11367	-	Dummy Plug - Green Shell	.25
M-20	12032	-	Socket for Transmitter Output	.15
M-21	84243	-	Socket for Power to Transmitter	.10
M-22	84243	-	Socket for Power to Solenoid Drum	.10
M-23	84244	-	Socket for Power to Remote Control Equipment	.10
M-24	11401	-	Motor Receptacle	.20
M-25	84222	-	Socket for Lighting Transformer	.10
M-26	F-9887	-	Socket for Electrical Selector Lights	.15
M-27	F-5324	-	15" Symphonola Speaker	16.50
M-28	12108	-	Remote Volume Control Motor	6.75
M-29	14215	-	Remote Volume Control Cable per ft.	.07
M-30	12106	-	Remote Volume Control Switch	.35
M-31	12105	-	Remote Selection Cancel Switch	.45
M-32	14121	-	Remote Selection Cancel Relay	1.25

FIGURE NO. 13 - FRONT VIEW OF TYPE 825-5 AMPLIFIER

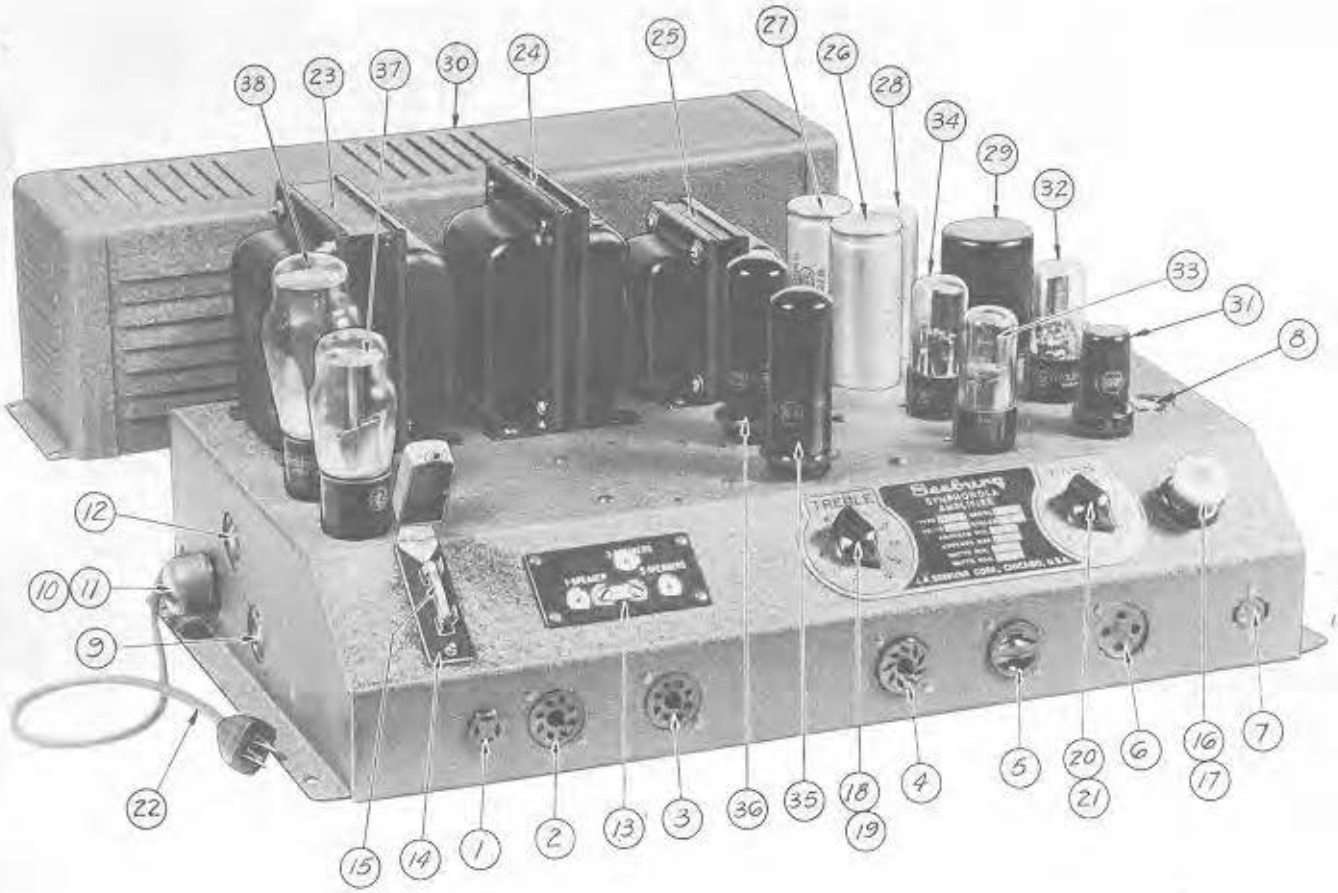

ITEM	PART NO.	DESCRIPTION	PRICE
1	12032	- Small 4 Contact Socket .	$ .15
2	84248	- Octal Socket	.10
3	84248	- Octal Socket	.10
4	84244	- 9 Contact Socket	.10
5	11401	- 2 Prong Receptacle . . .	.20
6	84222	- 4 Contact Socket	.10
7	F-8897	- Small Polarized 2 Contact Socket.	.15
8	84203	- 5 Contact Pickup Socket.	.10
9	84201	- 6 Contact Speaker Socket	.10
10	11367	- Dummy Plug	.25
11	84200	- 7 Contact Speaker Socket	.15
12	84200	- 7 Contact Speaker Socket	.15
13	12216	- Speaker Matching Panel .	.20
14	12030	- Light Fuse Receptacle. .	.20
15	F-7346	- 2-1/2 Amp. Fuse.	.10
16	14175	- 2-1/2 Amp. Non-temperable Fuse Socket	.40
17	14173	- 2-1/2 Amp. Non-temperable Fuse. . . .	.25
18	10056	- Control Knob	.10
19	10886	- Treble Control	.75
20	10056	- Control Knob	.10

ITEM	PART NO.	DESCRIPTION	PRICE
21	10059	- Bass Control	$ .75
22	12077	- 2 Ft. Power Cord & Plug.	.25
23	12059	- Power Transformer. . . .	4.50
24	12063	- 25 Volt Transformer. . .	3.00
25	12060	- 6 Volt Transformer . . .	2.50
26	87542	- 16 MFD. 475 Volt Wet Electrolytic Condenser	1.00
27	87541	- 16 MFD. 475 Volt Wet Electrolytic Condenser	1.00
28	87550	- Dual 20 MFD. 450 Volt, Single 20 MFD. 25 Volt Dry Electrolytic Condenser	1.25
29	12065	- Bass Choke	1.25
30	12037	- Transformer Housing. . .	1.50
31		- Type 6SQ7 Tube	.64
32		- Type 6J5GT Tube.	.68
33		- Type 6J5GT Tube.	.68
34		- Type 6J5GT Tube.	.68
35		- Type 6L6 Tube.	1.29
36		- Type 6L6 Tube.	1.29
37		- Type 5Y3G Tube	.44
38		- Type 5U4G Tube	.64

FIGURE NO. 14 - BOTTOM VIEW OF TYPE 825-5 AMPLIFIER

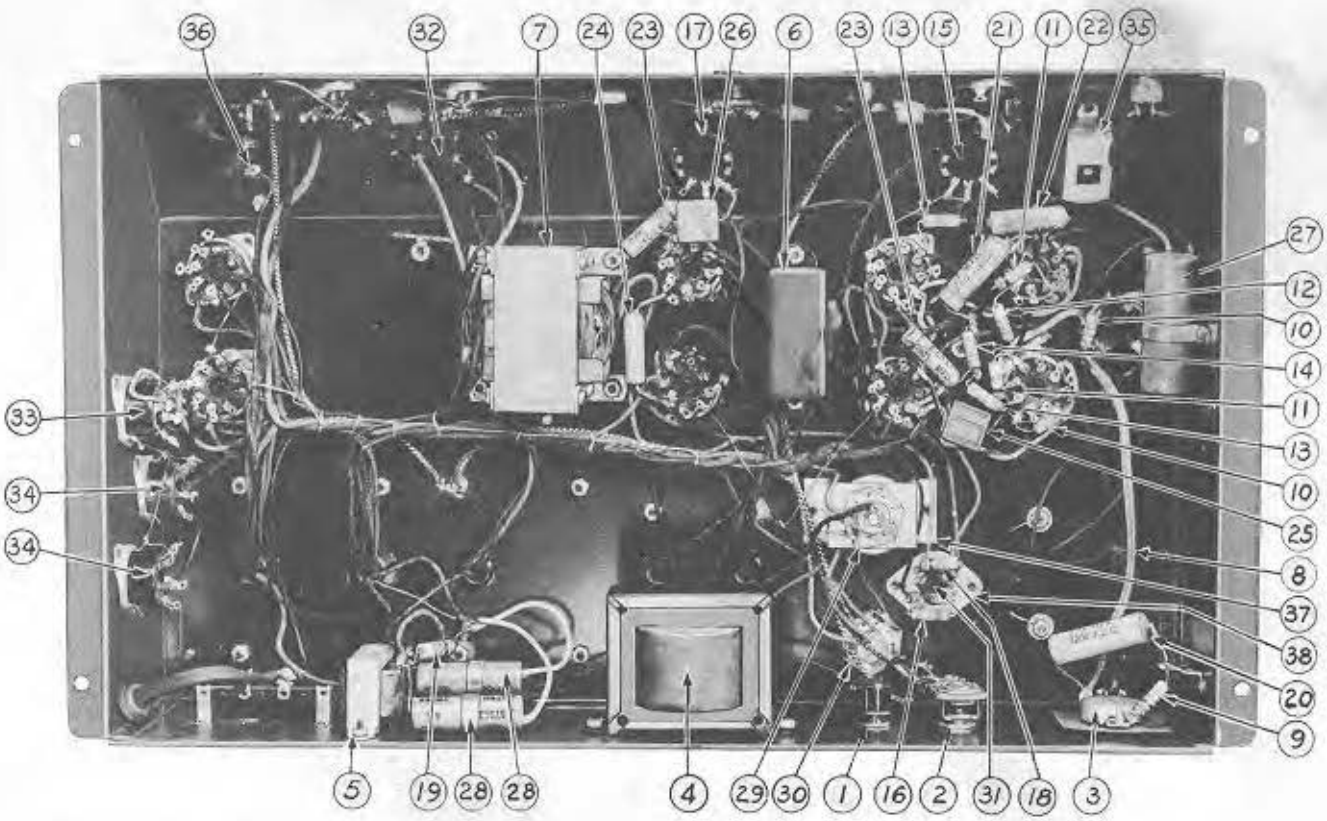

ITEM	PART NO.	REQ.	DESCRIPTION	PRICE
1	F-1849	1	- Main Switch.	$ .35
2	12071	1	- Light Switch	.45
3	F-3076	1	- 16,000 Ohm Volume Control	.75
4	11816	1	- Filter Choke	1.50
5	10791	1	- Bias Choke	.65
6	18034	1	- Input Transformer . . .	1.75
7	12058	1	- Output Transformer . . .	2.25
8	21304	1	- Shielded Input Lead. . .	.10
9	82482	1	- 500 Ohms, 1/2 Watt, 10% Resistor	.07
10	82403	2	- 5,600 Ohms, 1/2 Watt, 10% Resistor . . . . . ea.	.07
11	82403	2	- 100,000 Ohms, 1/2 Watt, 10% Resistor . . . . . ea.	.07
12	82428	1	- 2,200 Ohms, 1/2 Watt, 10% Resistor	.07
13	82443	2	- 39,000 Ohms, 1/2 Watt, 10% Resistor . . . . . ea.	.07
14	82452	1	- 220,000 Ohms, 1/2 Watt, 10% Resistor	.07
15	10029	1	- 100,000 Ohms Variable Bass Control	.75
16	82423	1	- 820 Ohms, 1/2 Watt, 10% Resistor	.07
17	10688	1	- 1 Megohm Variable Treble Control.	.75
18	82424	1	- 1,000 Ohms, 1/2 Watt, 10% Resistor	.07
19	82719	1	- 850 Ohms, 1 Watt, 5% Resistor	.15
20	86043	1	- .25 MFD., 200 Volt Paper Condenser.	.15
21	86008	1	- .1 MFD., 200 Volt Paper Condenser. . . .	$ .10
22	86015	1	- .05 MFD., 200 Volt Paper Condenser. . . .	.10
23	86031	2	- .02 MFD., 400 Volt Paper Condenser. . . . . ea.	.10
24	86069	1	- .005 MFD., 1000 Volt Paper Condenser. . . .	.10
25	85016	1	- .002 MFD. (2000 MMF), 10% Mica Condenser . .	.20
26	85010	1	- .0015 MFD. (1500 MMF), 10% Mica Condenser . .	.20
27	87512	1	- Dual 20 MFD., 25 Volt Dry Electrolytic Condenser	.75
28	87513	2	- 12 MFD., 150 Volt Dry Electrolytic Condenser ea.	.35
29	87542	1	- 16 MFD., 475 Volt Wet Electrolytic Condenser	1.00
30	87541	1	- 16 MFD., 475 Volt Wet Electrolytic Condenser	1.00
31	87500	1	- Dual 20 MFD. 450 Volt, Single 40 MFD. 25 Volt Dry Electrolytic Condenser	1.25
32	12216	1	- Speaker Matching Panel .	.20
33	84201	1	- 6 Prong Speaker Socket .	.10
34	84200	2	- 7 Prong Speaker Socket . ea.	.15
35	14175	1	- 2.5 Amp. Non-Interchangeable Fuse Receptacle. . . .	.40
36	12080	1	- Light Fuse Receptacle. .	.25
37	12055	1	- Electrolytic Mounting Bracket.	.10
38	10032	1	- Electrolytic Mounting Plate.	.05

FIGURE NO. 15 - SCHEMATIC DIAGRAM FOR TYPE 615-3 AMPLIFIER

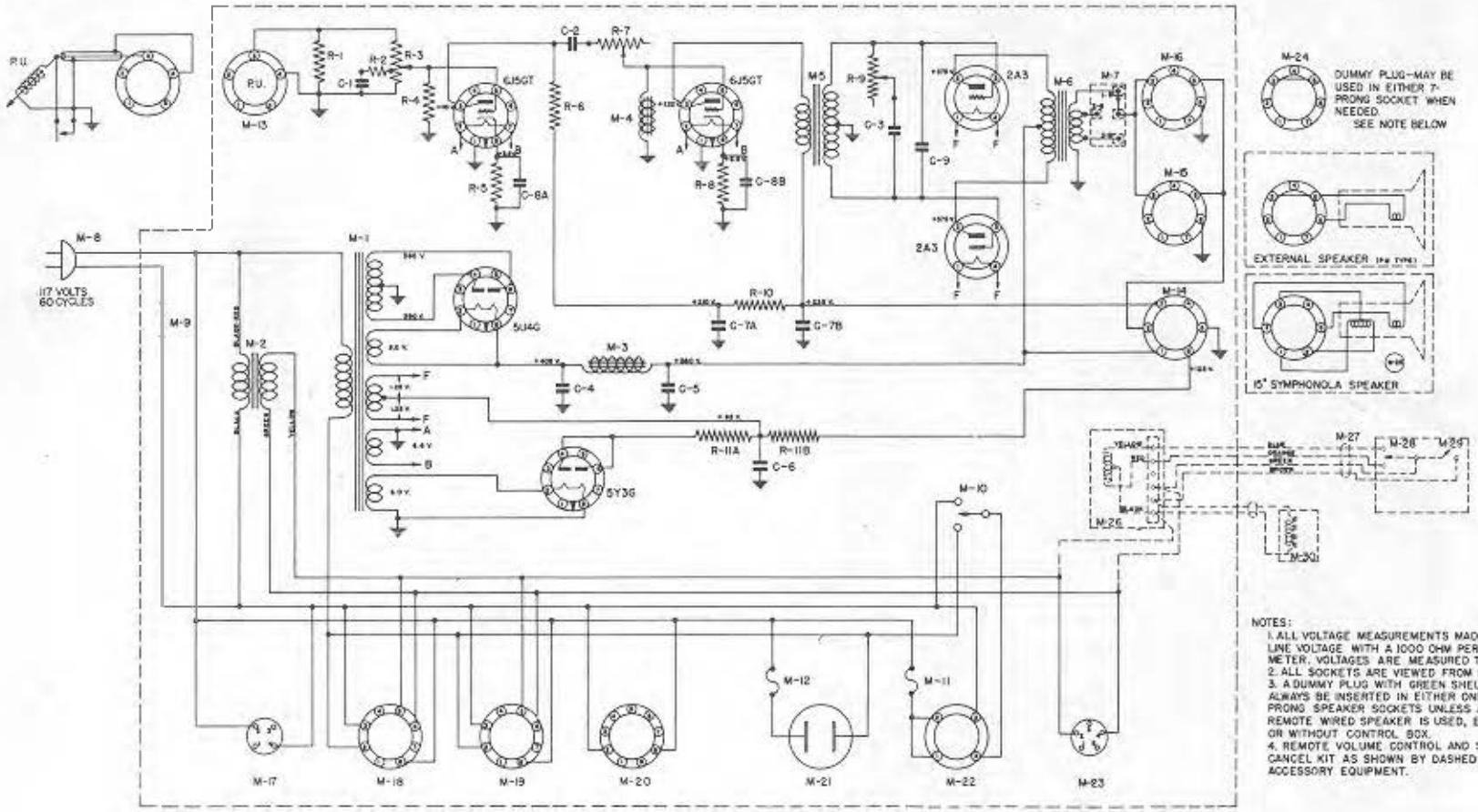

NOTES:
1. ALL VOLTAGE MEASUREMENTS MADE AT 117 VOLTS LINE VOLTAGE WITH A 1000 OHM PER VOLT VOLTMETER. VOLTAGES ARE MEASURED TO CHASSIS.
2. ALL SOCKETS ARE VIEWED FROM BOTTOM.
3. A DUMMY PLUG WITH GREEN SHELL SHOULD ALWAYS BE INSERTED IN EITHER ONE OF THE 7 PRONG SPEAKER SOCKETS UNLESS AN EXTERNAL, REMOTE WIRED SPEAKER IS USED, EITHER WITH OR WITHOUT CONTROL BOX.
4. REMOTE VOLUME CONTROL AND SELECTION CANCEL KIT AS SHOWN BY DASHED LINES IS ACCESSORY EQUIPMENT.

FIGURE NO. 15

SCHEMATIC DIAGRAM FOR TYPE 615-3 AMPLIFIER

ITEM	PART NO.		DESCRIPTION	PRICE
			RESISTORS	
R-1	82433	-	5,600 Ohms 1/2 Watt 10%	$ .07
R-2	82482	-	500 Ohms 1/2 Watt 10%	.07
R-3	F-3076	-	16,000 Ohm Volume Control	.75
R-4	82448	-	100,000 Ohms 1/2 Watt 10%	.07
R-5	82423	-	820 Ohms 1/2 Watt 10%	.07
R-6	82440	-	22,000 Ohms 1/2 Watt 10%	.07
R-7	10687	-	100,000 Ohms Variable Bass Control	.75
R-8	82423	-	820 Ohms 1/2 Watt 10%	.07
R-9	10688	-	1-Megohm Variable Treble Control	.75
R-10	82433	-	5,600 Ohms 1/2 Watt 10%	.07
R-11-A	81003	-	200 Ohms 2-1/2 Watts Wire Wound	.35
R-11-B		-	1400 Ohms 17-1/2 Watts Wire Wound	
			PAPER CONDENSERS	
C-1	86043	-	.25 MFD. 200 Volts	.15
C-2	86068	-	.03 MFD. 400 Volts	.10
C-3	86026	-	.015 MFD. 400 Volts	.10
			ELECTROLYTIC CONDENSERS	
C-4	87001	-	16 MFD. 475 Volts Wet	1.00
C-5	87001	-	16 MFD. 475 Volts Wet	1.00
C-6	87524	-	12 MFD. 450 Volts Dry	.50
C-7-A	87517	-	20 MFD. 450 Volts Dry	.80
C-7-B		-	20 MFD. 450 Volts Dry	
C-8-A	87512	-	20 MFD. 25 Volts Dry	.75
C-8-B		-	20 MFD. 25 Volts Dry	
			MICA CONDENSERS	
C-9	85017	-	.003 MFD. 3000 MMF. 20%	.20
			MISCELLANEOUS	
M-1	12057	-	Power Transformer	4.50
M-2	12063	-	25 Volt Transformer	3.00
M-3	10036	-	Filter Choke	1.50
M-4	11072	-	Bass Choke	1.25
M-5	10711	-	Input Transformer	1.60
M-6	11341	-	Output Transformer	1.40
M-7	11319	-	Speaker Matching Panel	.20
M-8	F-1369	-	14 Ft. Line Cord & Plug	.85
M-8	12077	-	2 Ft. Power Cord & Plug	.25
M-9	F-1349	-	Main Switch	.35
M-10	12031	-	Light Switch	.45
M-11	F-7846	-	2-1/2 Amp. Light Fuse	.10
M-12	14175	-	2.5 Amp. Non-tamperable Motor Fuse	.25
M-13	84203	-	Pickup Socket	.10
M-14	84201	-	Socket for Symphonola Speaker	.10
M-15	84200	-	Socket for Wired Remote Speaker	.15
M-16	84200	-	Socket for Wired Remote Speaker	.15
M-17	12032	-	Socket for Transmitter Output	.15
M-18	84248	-	Socket for Power to Transmitter	.10
M-19	84248	-	Socket for Power to Solenoid Drum	.10
M-20	84244	-	Socket for Power to Remote Control Equipt.	.10
M-21	11401	-	Motor Receptacle	.20
M-22	84222	-	Light Socket	.10
M-23	12035	-	Socket for Power to Magazine Relay	.15
M-24	11367	-	Dummy Plug Assembly Green Shell	.25
M-25	F-7018	-	15" Symphonola Speaker	11.00
M-26	12108	-	Remote Volume Control Motor	6.75
M-27	14215	-	Remote Volume Control Cable per ft.	.07
M-28	12106	-	Remote Volume Control Switch	.35
M-29	12105	-	Remote Selection Cancel Switch	.45
M-30	14121	-	Remote Selection Cancel Relay	1.25

FIGURE NO. 16 - FRONT VIEW OF TYPE 615-3 AMPLIFIER

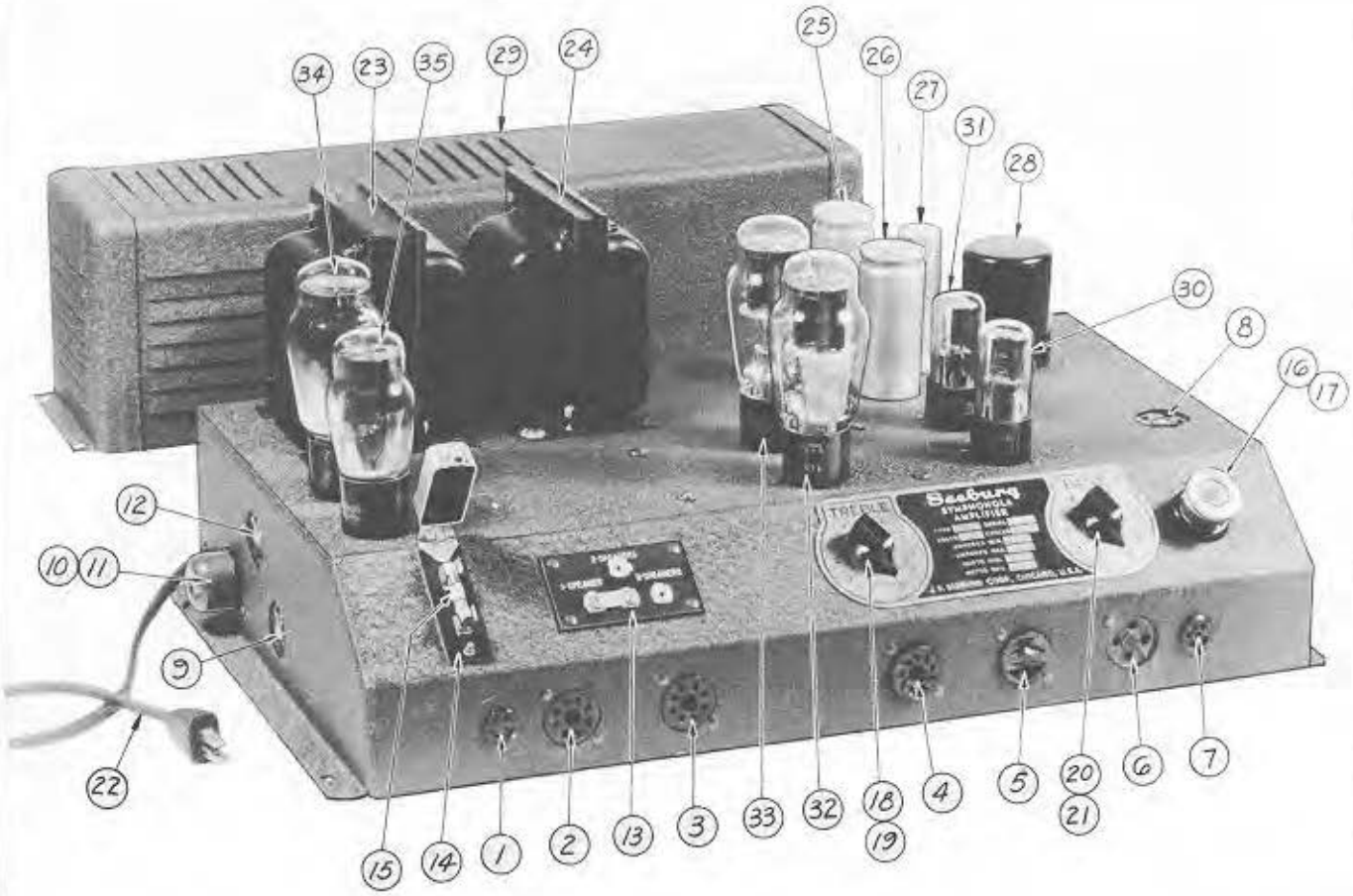

ITEM	PART NO.	DESCRIPTION	PRICE
1	12032	- Small 4 Contact Socket .	$ .15
2	84248	- Octal Socket	.10
3	84248	- Octal Socket	.10
4	84244	- 9 Contact Socket	.10
5	11401	- 2 Prong Receptacle . . .	.20
6	84222	- 4 Contact Socket	.10
7	12033	- Small 5 Contact Socket .	.15
8	84203	- 5 Contact Pickup Socket.	.10
9	84201	- 6 Contact Speaker Socket	.10
10	11367	- Dummy Plug	.25
11	84200	- 7 Contact Speaker Socket	.15
12	84200	- 7 Contact Speaker Socket	.15
13	11319	- Speaker Matching Panel .	.20
14	12080	- Light Fuse Receptacle. .	.25
15	F-7846	- 2-1/2 Amp. Fuse.	.10
16	14175	- 2-1/2 Amp. Non-tamperable Fuse Socket . . .	.40
17	14173	- 2-1/2 Amp. Non-tamperable Fuse	.25
18	10056	- Control Knob	.10
19	10688	- Treble Control	.75
20	10056	- Control Knob	$ .10
21	10687	- Bass Control	.75
22	12077	- 2 Ft. Power Cord & Plug.	.25
23	12057	- Power Transformer. . . .	4.50
24	12063	- 25 Volt Transformer. . .	3.00
25	87001	- 16 MFD. 475 Volt Wet Electrolytic Condenser	1.00
26	87001	- 16 MFD. 475 Volt Wet Electrolytic Condenser	1.00
27	87517	- Dual 20 MFD. 450 Volt Dry Electrolytic Condenser	.80
28	11072	- Bass Choke	1.25
29	12037	- Transformer Housing. . .	1.50
30		- Type 6J5GT Tube.	.68
31		- Type 6J5GT Tube.	.68
32		- Type 2A3 Tube.	1.29
33		- Type 2A3 Tube.	1.29
34		- Type 5U4G Tube	.64
35		- Type 5Y3G Tube	.44

FIGURE NO. 17 - BOTTOM VIEW OF TYPE 615-3 AMPLIFIER

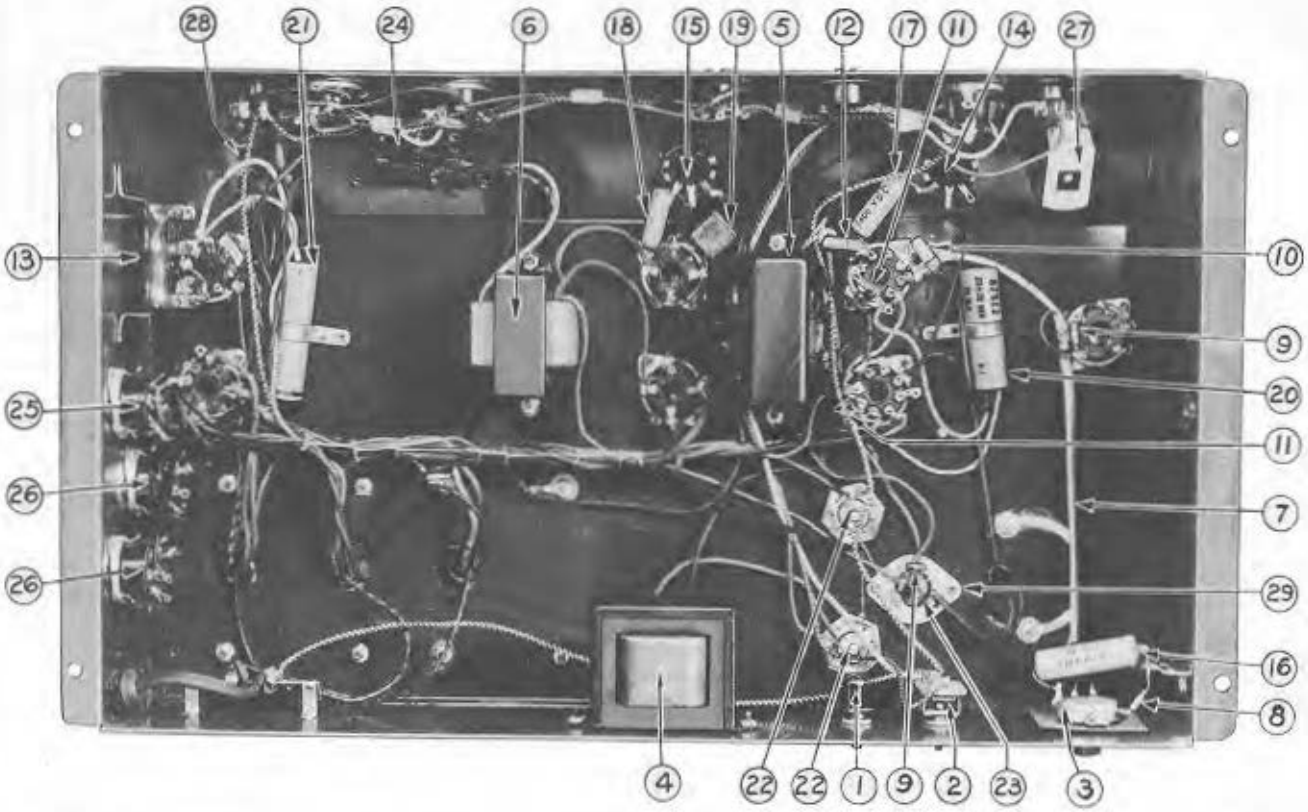

ITEM	PART NO.	REQ.	DESCRIPTION	PRICE
1	F-1549	1	- Main Switch	$ .35
2	12031	1	- Light Switch.	.45
3	F-2076	1	- 15,000 Ohm Volume Control	.75
4	10036	1	- Filter Choke.	1.50
5	10711	1	- Input Transformer . .	1.75
6	11341	1	- Output Transformer. .	2.25
7	11304	1	- Shielded Input Lead .	.10
8	82402	1	- 500 Ohm, 1/2 Watt, 10% Resistor. . . .	.07
9	82403	2	- 5,000 Ohm, 1/2 Watt, 10% Resistor. . . . ea.	.07
10	82410	1	- 100,000 Ohm, 1/2 Watt, 10% Resistor.	.07
11	82423	2	- 820 Ohm, 1/2 Watt, 10% Resistor. . . . ea.	.07
12	82440	1	- 22,000 Ohm, 1/2 Watt, 10% Resistor. . . .	.07
13	81003	1	- 200-1400 Ohm, 20 Watt Resistor.	.35
14	10687	1	- 100,000 Ohm Variable Bass Control. . . .	.75
15	10688	1	- 1 Megohm Variable Treble Control. . .	.75
16	86043	1	- .25 MFD. 200 Volt Paper Condenser . .	.15
17	86068	1	- .05 MFD. 400 Volt Paper Condenser . .	.10
18	86026	1	- .015 MFD. 400 Volt Paper Condenser . .	$ .10
19	85017	1	- .003 MFD. (3000 MMF) 10% Mica Condenser.	.10
20	87512	1	- Dual 20 MFD., 25 Volt Dry Electrolytic Condenser	.75
21	87524	1	- 12 MFD., 450 Volt Dry Electrolytic Condenser.	.50
22	87801	2	- 16 MFD. 475 Volt Wet Electrolytic Condenser. . . . . ea.	1.00
23	87517	1	- Dual 20 MFD. 450 Volt Dry Electrolytic Condenser	.80
24	11519	1	- Speaker Matching Panel	.20
25	84201	1	- 6 Prong Speaker Socket.	.10
26	84200	2	- 7 Prong Speaker Socket. . . . . ea.	.15
27	14175	1	- 2.5 Amp. Non-tamperable Fuse Socket. .	.40
28	12020	1	- Light Fuse Receptacle With Cover.	.25
29	10832	1	- Electrolytic Mounting Plate	.05

FIGURE NO. 18 - SCHEMATIC DIAGRAM ELECTRICAL SELECTOR TYPE B

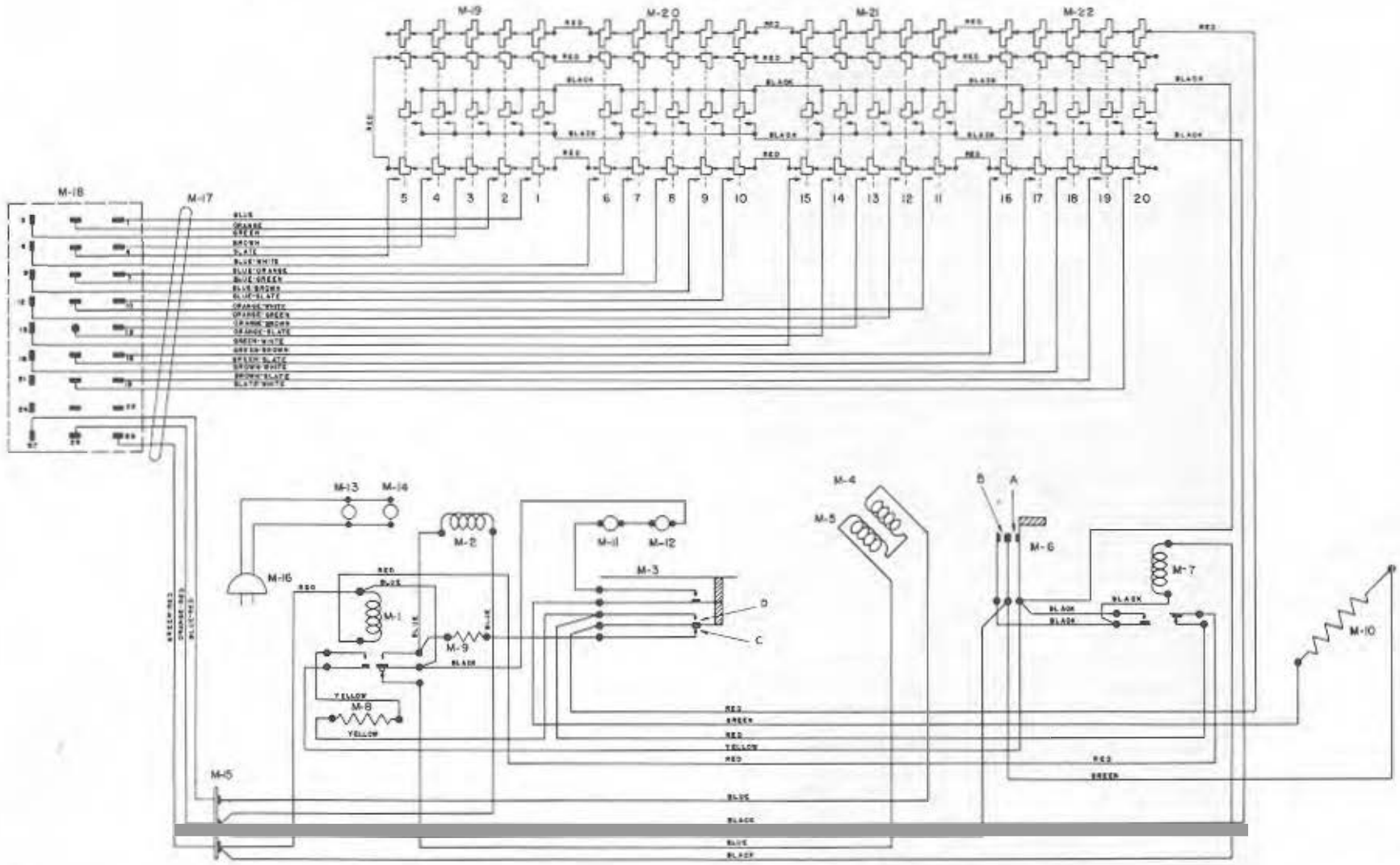

ITEM NO.	PART NO.	DESCRIPTION	NO. REQ.	PRICE	ITEM NO.	PART NO.	DESCRIPTION	NO. REQ.	PRICE	ITEM NO.	PART NO.	DESCRIPTION	NO. REQ.	PRICE
1	F-5867	- Series Relay	1	$1.60	9	62718	- 22 Ohm 1 Watt Resistor	1	$ .16	16	10895	- 2 Prong Plug	1	$ .05
2	F-5895	- Credit Cancel Solenoid	1	.50	10	F-5865	- 75 Ohm Candohm	1	.75	17	F-9449	- Selector Cable	1	1.50
3	F-5900	- Credit and Light Switch.	1	.25	11	10242	- Pilot Lamp	1	.10	18	F-9461	- 27 Contact Plug.	1	1.00
4	F-5869	- Credit Magnet.	1	1.00	12	10242	- Pilot Lamp	1	.10	19	F-9484	- Switch Assembly 1-5.	1	3.50
5	F-5869	- Credit Magnet.	1	per pr.	13	F-9480	- 25 Watt Lamp	1	.25	20	F-9485	- Switch Assembly 6-10	1	3.50
6	F-5894	- Interlocking Switch.	1	.25	14	F-9480	- 25 Watt Lamp	1	.25	21	F-9486	- Switch Assembly 11-15.	1	3.50
7	F-5868	- Interlocking Relay	1	1.40	15	11089	- Terminal Strip	1	.05	22	F-9487	- Switch Assembly 16-20.	1	3.50
8	F-5897	- 50 Ohm Candohm	1	.25										

FIGURE NO. 19 - SCHEMATIC DIAGRAM ELECTRICAL SELECTOR TYPE C

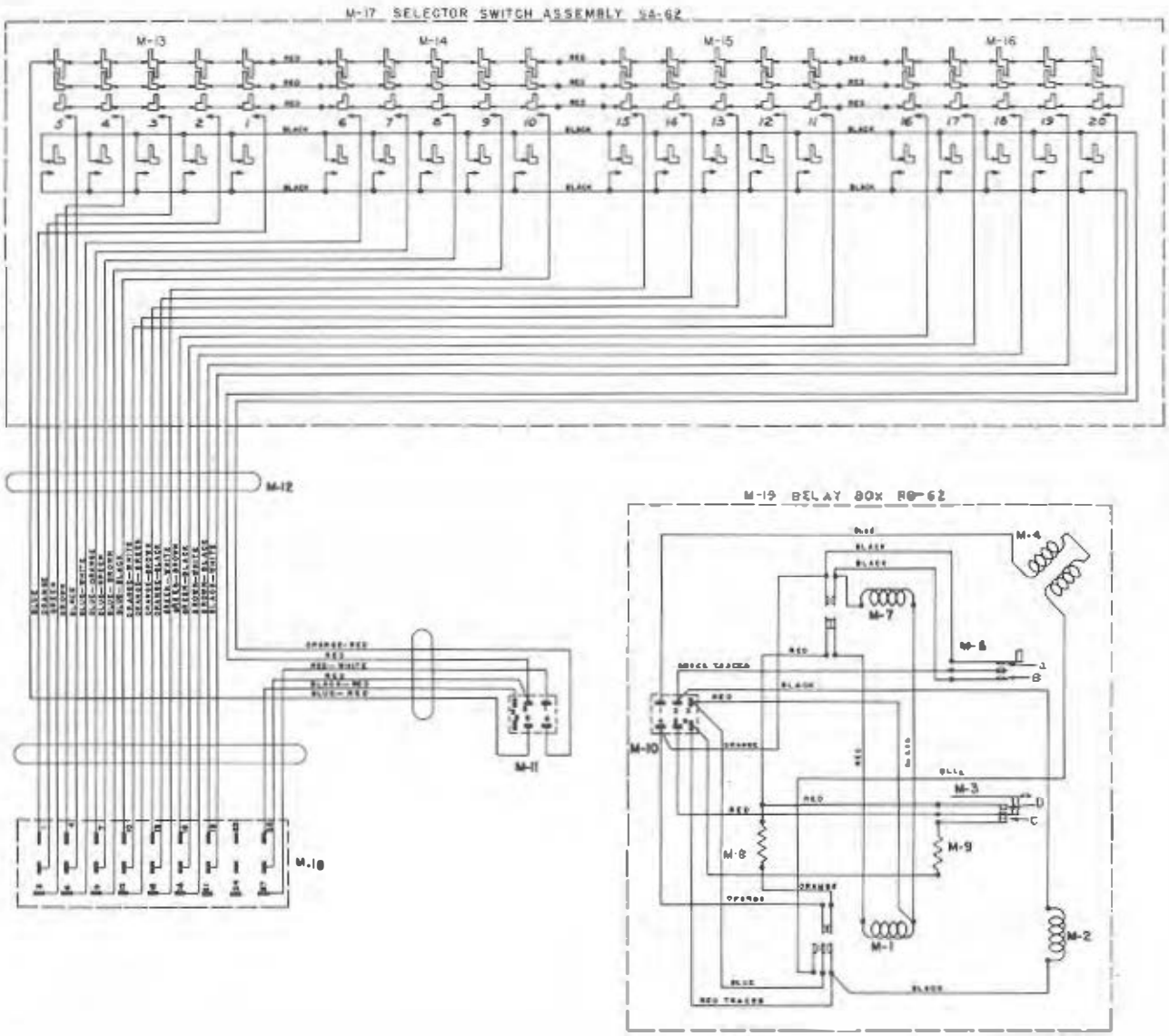

ITEM	PART NO.	DESCRIPTION	NO. REQ.	PRICE
M-1	F-3891	- Series Relay.	1	$ 1.50
M-2	F-3893	- Cancel Solenoid	1	.50
M-3	F-3886	- Credit Switch	1	.35
M-4	F-3871	- Credit Magnet (Pair). . .	1 pair	1.00
M-6	F-3894	- Interlocking Switch . . .	1	.25
M-7	F-3892	- Interlocking Relay. . . .	1	1.40
M-8	F-3887	- 30 Ohm Candohm.	1	.25
M-9	82718	- 22 Ohm 1 watt resistor. .	1	.15
M-10	F-3829	- 6 Prong Plug.	1	.25
M-11	F-3823	- 6 Prong Socket (Female) .	1	.60

ITEM	PART NO.	DESCRIPTION	NO. REQ.	PRICE
M-12	F-8895	- Selector Cable.	1	$ 2.50
M-13	F-6224-A	- Switch Assembly (1 to 5).	1	3.50
M-14	F-6225-A	- Switch Assembly (6 to 10)	1	3.50
M-15	F-6226-A	- Switch Assembly (11 to 15)	1	3.50
M-16	F-6227-A	- Switch Assembly (16 to 20)	1	3.50
M-17	SA-62	- Selector Switch Assembly.		15.00
M-18	F-9461	- 27 Contact Plug (male). .	1	1.00
M-19	RB-62	- Relay Box Assembly. . . .	1	12.50

FIGURE NO. 20 - SCHEMATIC DIAGRAM SERIES RELAY (SELECTION) CIRCUIT

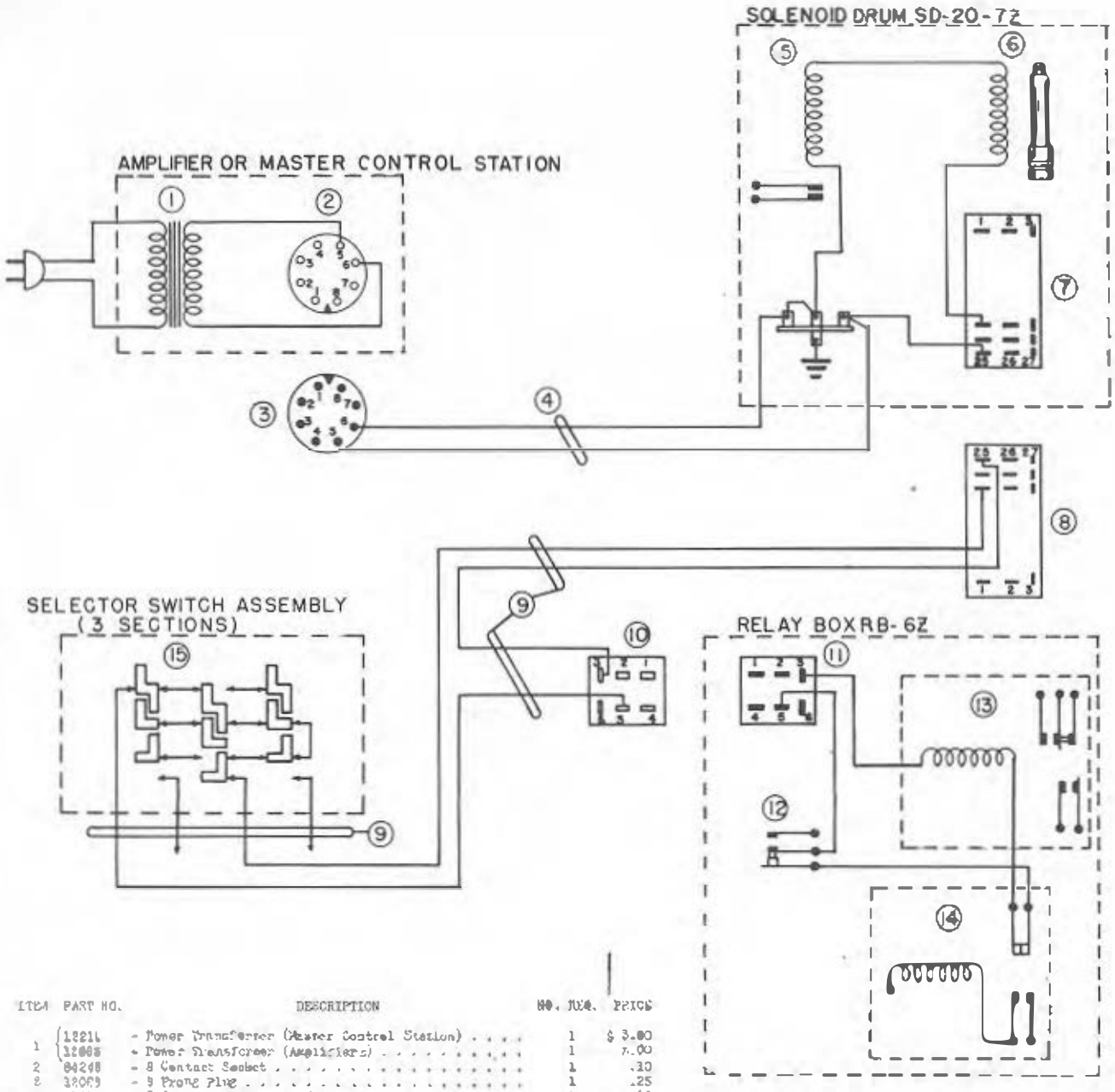

ITEM	PART NO.	DESCRIPTION	NO. REQ.	PRICE
1	12216	- Power Transformer (Master Control Station)	1	$ 3.00
	12005	- Power Transformer (Amplifiers)	1	7.00
2	04248	- 8 Contact Socket	1	.30
3	12009	- 8 Prong Plug	1	.25
4	11791	- 5 Conductor Power Cord	1	.45
5	11788	- Counter Relay	1	1.50
6	11500	- Solenoid	1	.20
7	11202	- 27 Contact Socket	1	1.00
8	F-3661	- 27 Prong Plug	1	1.00
9	F-3895	- Selector Cable	1	2.50
10	F-3825	- 6 Contact Socket (Female)	1	.60
11	F-3827	- 6 Prong Plug (Male)	1	.25
12	F-3886	- Credit Switch	1	.35
13	F-3891	- Series Relay	1	1.50
14	F-3892	- Interlock Relay	1	1.40
15	F-3894	- Selector Switch Assembly	1	5.50

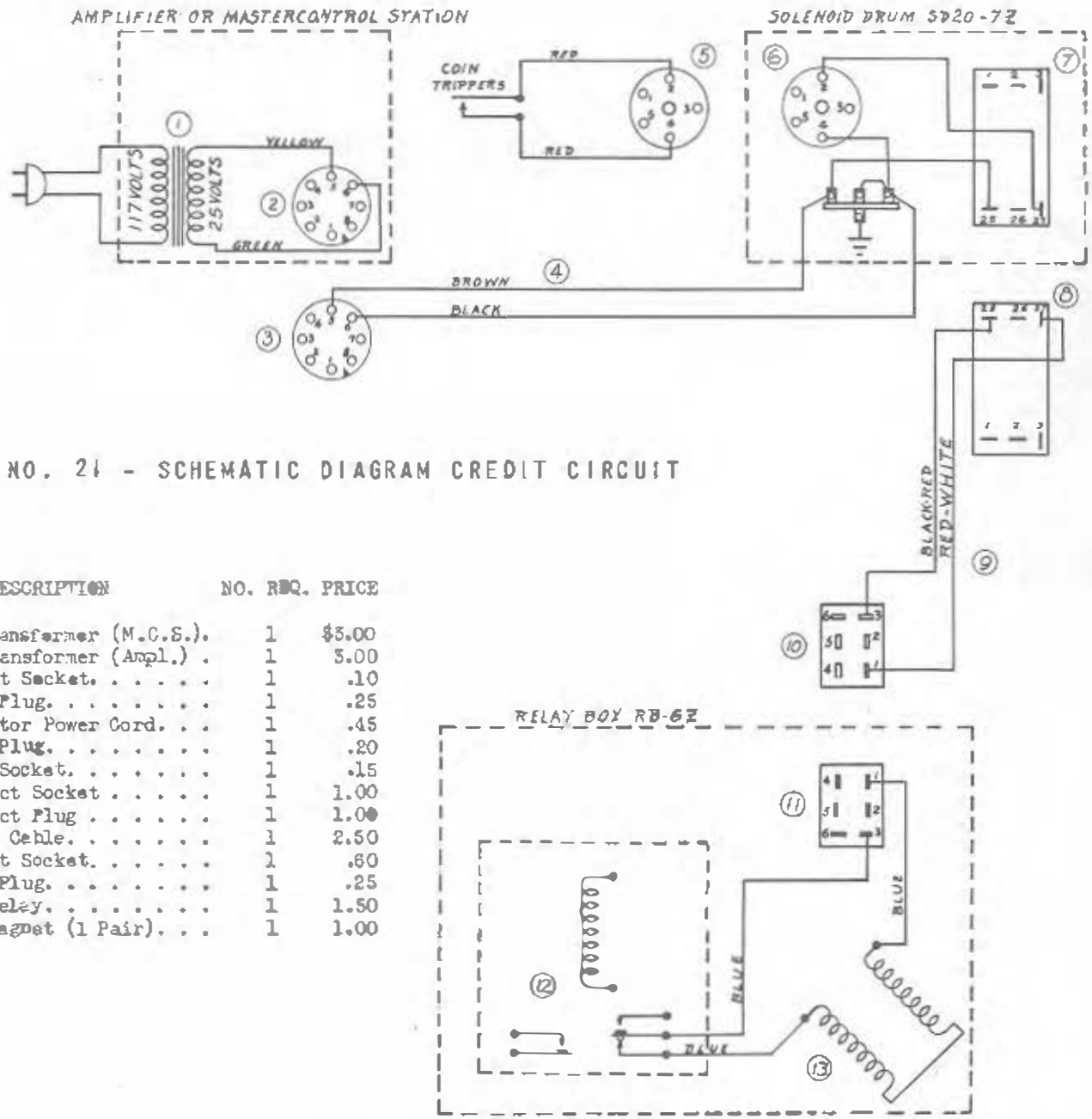

FIGURE NO. 21 - SCHEMATIC DIAGRAM CREDIT CIRCUIT

ITEM	PART NO.	DESCRIPTION	NO. REQ.	PRICE
1	12211	- Power Transformer (M.C.S.).	1	$3.00
	12063	- Power Transformer (Ampl.) .	1	3.00
2	84248	- 8 Contact Socket.	1	.10
3	12028	- 8 Prong Plug.	1	.25
4	11781	- 5 Conductor Power Cord. . .	1	.45
5	F-8827	- 6 Prong Plug.	1	.20
6	11759	- 6 Prong Socket.	1	.15
7	11202	- 27 Contact Socket	1	1.00
8	F-9421	- 27 Contact Plug	1	1.00
9	F-8895	- Selector Cable.	1	2.50
10	F-3623	- 6 Contact Socket.	1	.60
11	F-3827	- 8 Prong Plug.	1	.25
12	F-3825	- Series Relay.	1	1.50
13	F-3871	- Credit Magnet (1 Pair). . .	1	1.00

FIGURE NO. 22 - ELECTRICAL SELECTOR TYPE ES-5Z

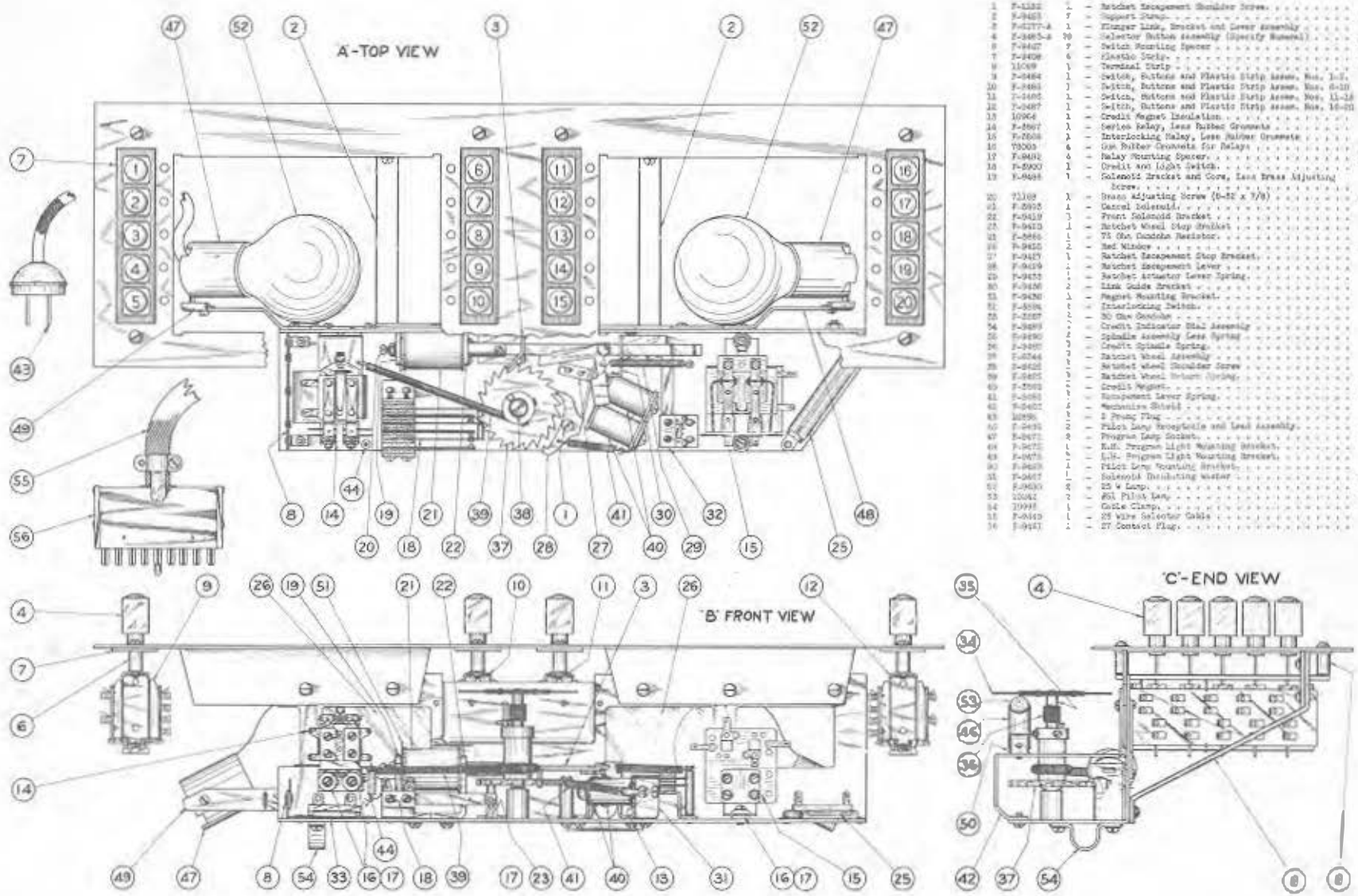

ITEM	PART NO.	NO.		DESCRIPTION		PRICE
1	F-1182	1	-	Ratchet Escapement Shoulder Screw.	$	.05
2	F-9465	7	-	Support Stamp.	ea.	.10
3	F-9177-A	1	-	Hinger Link, Bracket and Lever Assembly		.20
4	F-9485-A	30	-	Selector Button Assembly (Specify Numeral)	ea.	.15
5	F-9467	7	-	Switch Mounting Spacer	doz.	.15
7	F-9408	6	-	Plastic Strip.	ea.	.10
8	11049	1	-	Terminal Strip		.05
9	F-9484	1	-	Switch, Buttons and Plastic Strip assem. Nos. 1-5.		5.50
10	F-9481	1	-	Switch, Buttons and Plastic Strip assem. Nos. 6-10		5.50
11	F-9485	1	-	Switch, Buttons and Plastic Strip assem. Nos. 11-15		5.50
12	F-9487	1	-	Switch, Buttons and Plastic Strip assem. Nos. 16-20		5.50
13	10964	1	-	Credit Magnet Insulation.		.05
14	F-8867	1	-	Series Relay, Less Rubber Grommets		1.50
15	F-8868	1	-	Interlocking Relay, Less Rubber Grommets		1.40
16	T8003	6	-	Gum Rubber Grommets for Relays	doz.	.15
17	F-9482	4	-	Relay Mounting Spacer.	doz.	.20
18	F-8900	1	-	Credit and Light Switch.		.50
19	F-9488	1	-	Solenoid Bracket and Core, Less Brass Adjusting Screw.		.15
20	71109	1	-	Brass Adjusting Screw (8-32 x 7/8)	doz.	.15
21	F-8905	1	-	Cancel Solenoid.		.40
22	F-9419	1	-	Front Solenoid Bracket		.10
23	F-9413	1	-	Ratchet Wheel Stop Bracket		.10
24	F-8866	1	-	75 Ohm Cascade Resistor.		.75
25	F-9415	2	-	Rod Washer	ea.	.10
27	F-9417	1	-	Ratchet Escapement Stop Bracket.		.20
28	F-9419	1	-	Ratchet Escapement Lever		.30
29	F-9453	1	-	Ratchet Armature Lever Spring.		.20
30	F-9420	2	-	Link Guide Bracket		.20
31	F-9420	1	-	Magnet Mounting Bracket.		.20
32	F-8894	1	-	Interlocking Switch.		.25
33	F-2287	1	-	30 Ohm Cascade		.25
34	F-9489	1	-	Credit Indicator Dial Assembly		.25
35	F-9490	2	-	Spindle Assembly Less Spring		.25
36	F-9491	2	-	Credit Spindle Spring.		.05
37	F-8744	2	-	Ratchet Wheel Assembly		.60
38	F-8425	2	-	Ratchet wheel Shoulder Screw		.05
39	F-9475	2	-	Ratchet Wheel Return Spring.		.05
40	F-8902	2	-	Credit Magnet.	gr.	1.00
41	F-8481	1	-	Escapement Lever Spring.		.05
42	F-9421	1	-	Mechanism Shield		.25
43	10890	1	-	2 Prong Plug		.05
45	F-9431	2	-	Pilot Lamp Receptacle and Lead Assembly.	ea.	.20
47	F-9471	8	-	Program Lamp Socket.	ea.	.10
48	F-9472	1	-	R.H. Program Light Mounting Bracket.		.15
49	F-9473	1	-	L.H. Program Light Mounting Bracket.		.15
50	F-9429	1	-	Pilot Lamp Mounting Bracket.		.15
51	F-9417	1	-	Solenoid Distributing Master	doz.	.10
52	F-9430	2	-	25 W Lamp.	ea.	.10
53	12042	2	-	#51 Pilot Lamp.	ea.	.08
54	10999	1	-	Cable Clamp.		.10
55	F-9469	1	-	25 wire Selector Cable		1.75
56	F-9451	1	-	27 Contact Plug.		1.00

FIGURE NO. 23 - SWITCH ASSEMBLY TYPE SA-6Z

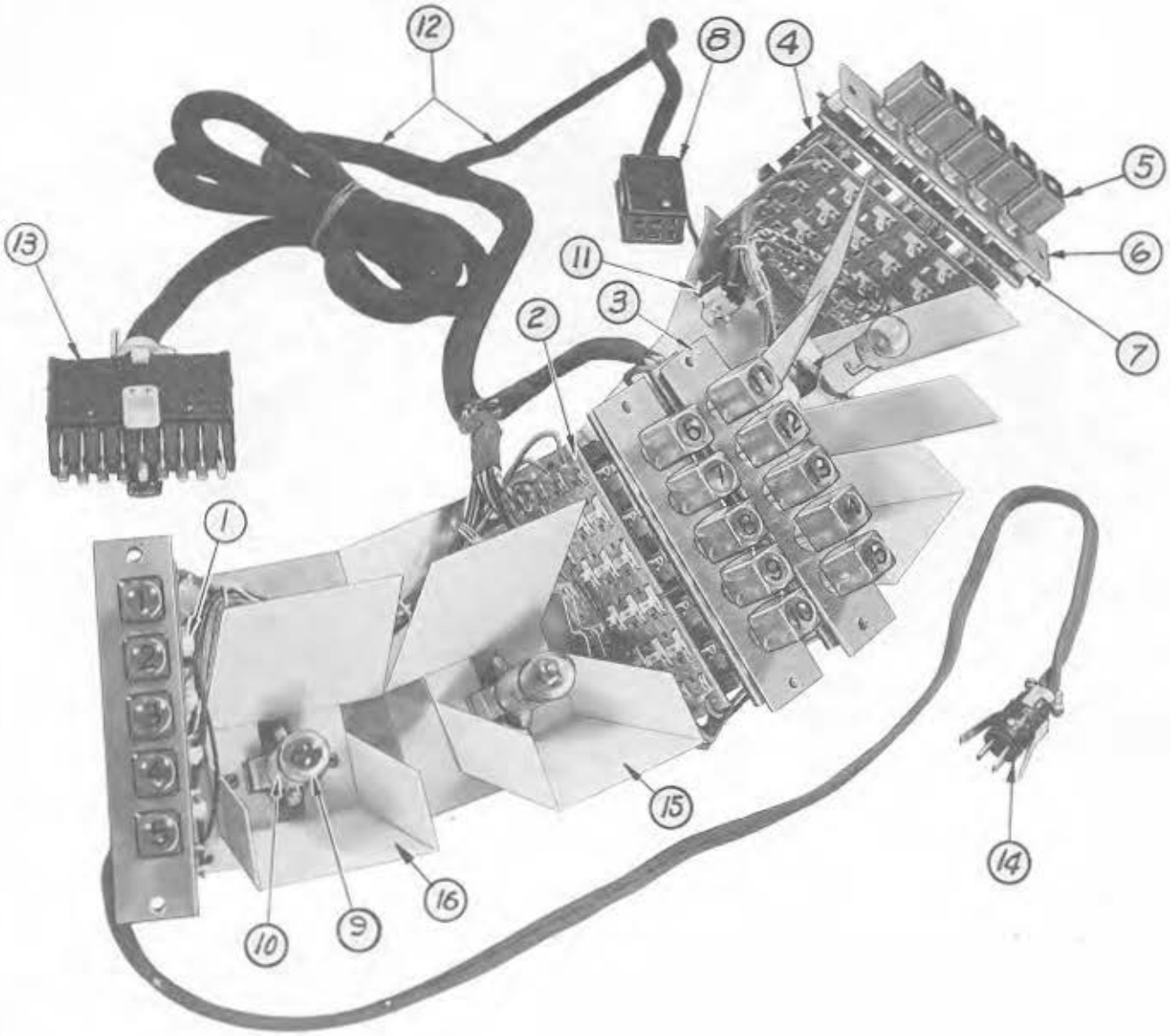

ITEM	PART NO.	REQ.	DESCRIPTION		PRICE
1	F-6224-A	1	- Selector Switch Assembly L-5.		$ 5.50
2	F-6225-A	1	- Selector Switch Assembly 6-10		3.30
3	F-6226-A	1	- Selector Switch Assembly 11-15.		3.50
4	F-6227-A	1	- Selector Switch Assembly 16-20.		3.50
5	F-9483-A	20	- Selector Button Assembly (specify numeral). . .	ea.	.15
6	F-9408	4	- Plastic Strip.	ea.	.10
7	F-9407	6	- Plastic Strip Spacer . .	doz.	.15

ITEM	PART NO.	REQ.	DESCRIPTION		PRICE
8	F-3823	1	- 6 Prong Socket (female).		$ .60
9	F-7817	4	- #81 Mazda Lamp	ea.	.10
10	F-8846	4	- Light Socket	ea.	.10
11	F-8897	1	- 2 Prong Socket		.15
12	F-6895	1	- Selector Cable		2.50
13	F-9461	1	- 27 Prong Plug (male) . .		1.00
14	F-8396	1	- 2 Prong Plug		.30
15	F-8951	2	- Escutcheon Reflector R.H.	ea.	.25
16	F-8952	2	- Escutcheon Reflector L.H.	ea.	.25

FIGURE NO. 24 - RELAY BOX TYPE RB-6Z

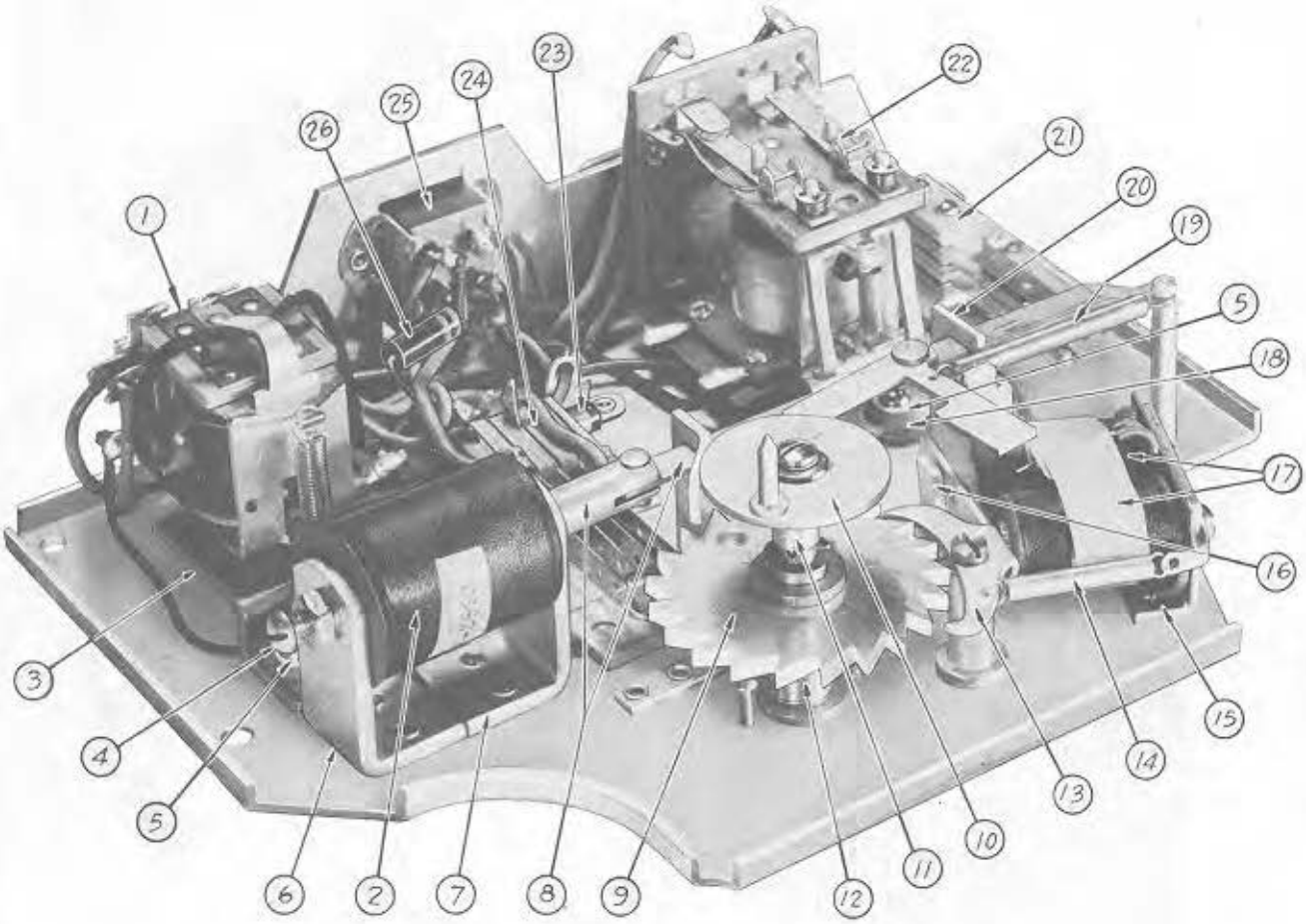

ITEM	PART NO.	REQ.	DESCRIPTION	PRICE
1	F-3991	1	- Series Relay	$ 1.50
2	F-3893	1	- Credit Cancel Solenoid	.50
3	F-3901	1	- Series Relay Mounting Bracket.	.10
4	71168	1	- Brass Adjusting Screw 7/8" x #8-32 . . . doz.	.15
5	F-9482	5	- Relay Mounting Spacer doz.	.20
6	F-9416	1	- Solenoid Bracket (Rear)	.10
7	F-9419	1	- Solenoid Bracket (Front).	.10
8	F-6177	1	- Plunger Link Assembly.	.20
9	F-6201-A	1	- Ratchet Wheel Assembly	.60
10	F-6212-A	1	- Lower Coupling Disc Assembly	.10
11	F-3895	1	- Credit Dial Spring . .	.05
12	F-3889	1	- Ratchet Wheel Return Spring	.10
13	F-9429	1	- Ratchet Escapement. .	$ .10
14	F-9465	1	- Ratchet Escapement Spring.	.05
15	F-9438	1	- Magnet Mounting Bracket	.10
16	F-9427	1	- Ratchet Escapement Stop.	.10
17	F-3871	2	- Credit Magnet . . . pr.	1.00
18	78005	5	- Rubber Grommet. . . doz.	.10
19	F-9433	1	- Ratchet Actuator Lever Spring. . . .	.10
20	F-9436	1	- Link Guide Bracket. .	.10
21	F-3894	1	- Interlocking Switch .	.25
22	F-5892	1	- Interlocking Relay. .	1.40
23	F-5887	1	- 30 Ohm Candohm. . . .	.25
24	F-3886	1	- Credit Switch	.55
25	F-5827	1	- 6 Prong Plug (Male) .	.25
26	62718	1	- 22 Ohm 1 Watt Resistor.	.15

FIGURE NO. 25 - SOLENOID DRUM ASSEMBLY TYPE SD20-7Z (TOP VIEW)

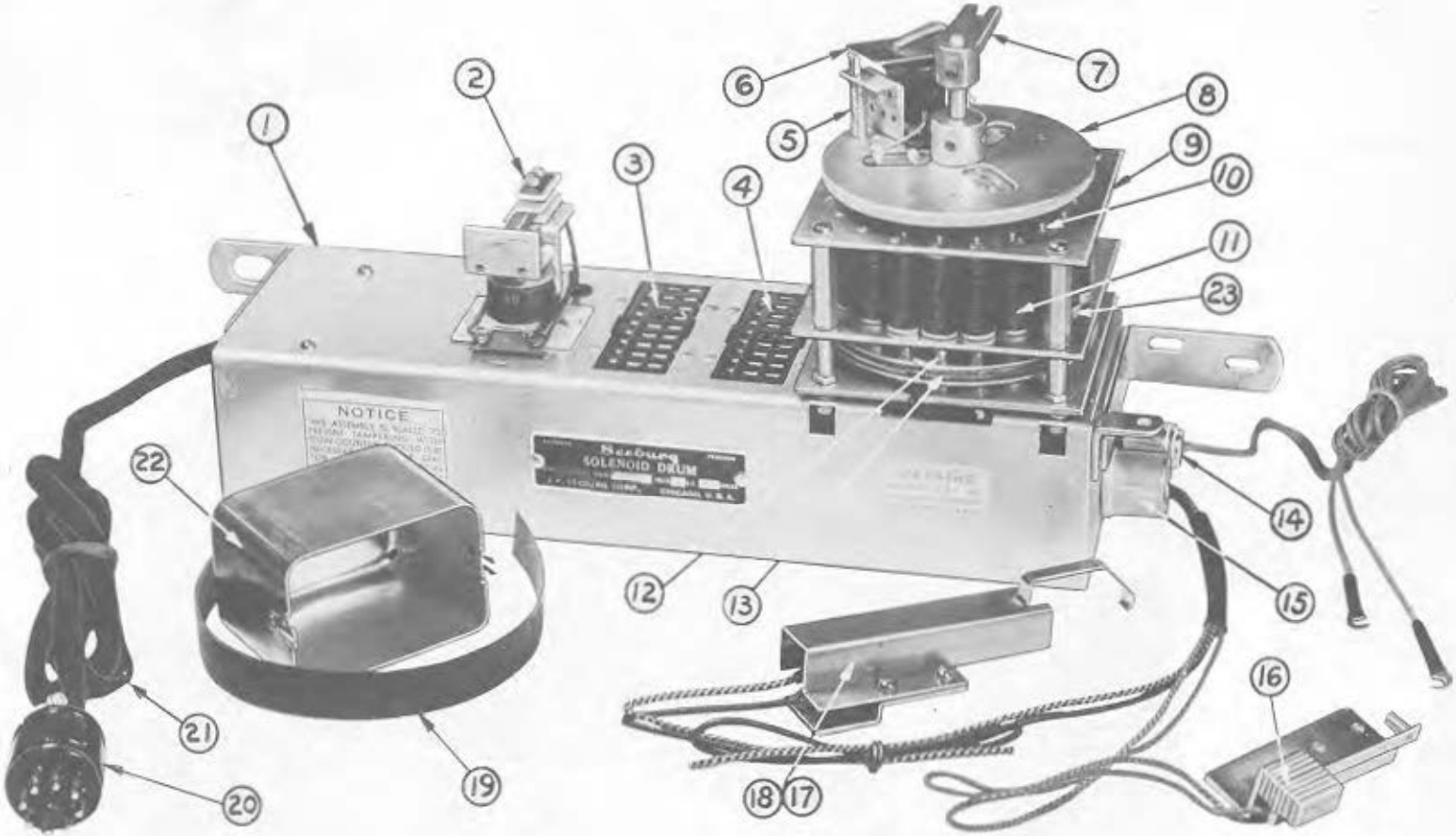

ITEM	PART NO.	REQ.	DESCRIPTION	PRICE
1	11774	1	- Solenoid Drum Sub Panel.	$ 1.10
2	11517	1	- Motor Control Relay.	1.35
3	12017	1	- 27 Contact Socket.	1.00
4	11202	1	- 27 Contact Socket.	1.00
5	11159	1	- Rotor Shaft Spring	.05
6	11805-A	1	- Pin Cancel Relay Assembly. . . .	1.15
7	11105	1	- Coupling Arm (Lower)	.15
8	11764-A	1	- Selector Disc Plate Assembly . .	.75
9	11765-A	1	- Selector Guide Plate Assembly. .	.65
10	11762	20	- Selector Stop Pin. . . . . doz.	.10
11	11800	20	- Selector Solenoid. . . . . each	.20
12	11768-A	20	- Solenoid Plunger Assembly. . . each	.10
13	11804	1	- Plunger Contact Spring	$ .10
14	F-6827	1	- 6 Prong Plug & Wire Assembly . . .	.20
15	F-7418	1	- 4 Prong Plug & Wire Assembly . .	.20
16	F-6225-A	1	- Selection Cancel Switch.	.25
17	F-6173-A	1	- Motor Carry-over Switch Assembly	.35
18	F-3211	1	- Motor Carry-over Switch Shield .	.15
19	11420	1	- Insulator Strip.	.10
20	12028	1	- 6 Prong Octal Plug	.25
21	11781	1	- 5 Conductor Power Cord	.50
22	11779-A	1	- Relay Cover Assembly	.15
23	11445	20	- "C" Washer . . . . . doz.	.05

FIGURE NO. 26 - SOLENOID DRUM ASSEMBLY TYPE SD20-7Z (BOTTOM VIEW)

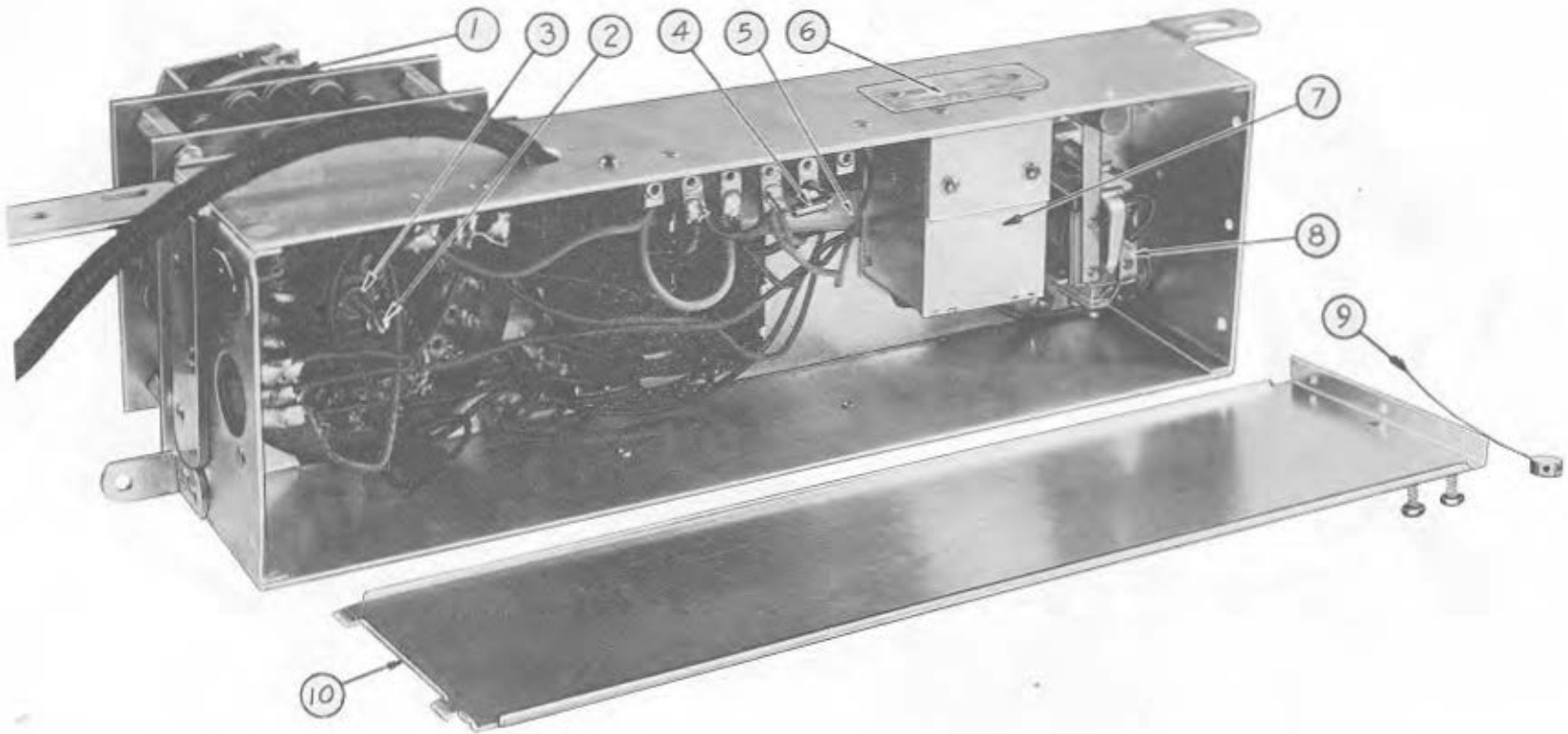

ITEM	PART NO.	DESCRIPTION	NO.REQ.	PRICE	ITEM	PART NO.	DESCRIPTION	NO.REQ.	PRICE
1	11754	- Selector Disc Stop. . .	3	ea. $ .05	5	86045	- .1 MFD 600 Volt Condenser.	1	$ .15
2	71047	- Selector Shaft Adjusting Screw	1	doz. .15	6	11806	- Counter Window.	1	.05
3	70003	- Adjusting Screw Locknut	1	doz. .10	7	11783	- Counter Unit.	1	4.25
4	82100	- 10 OHM 1/2 Watt Resistor.	1	.07	8	11782	- Counter Relay	1	1.80
					9	11785	- Wire Seal	1	.05
					10	11784	- Sub Panel Bottom. . . .	1	.35

FIGURE NO. 27- SCHEMATIC DIAGRAM MOTOR CONTROL CIRCUIT

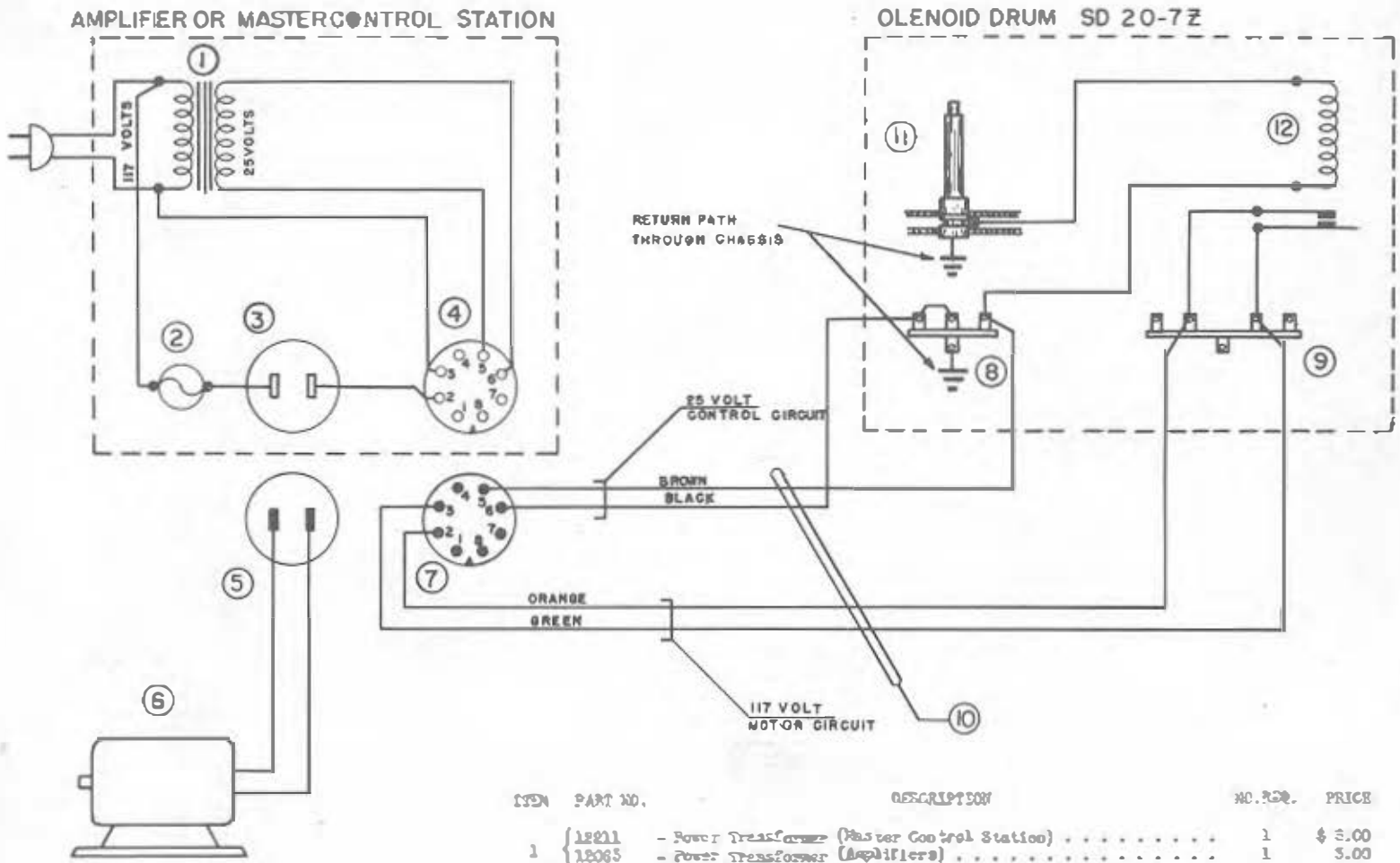

ITEM	PART NO.	DESCRIPTION	NO. REQ.	PRICE
1	12211	- Power Transformer (Master Control Station)	1	$ 3.00
	12063	- Power Transformer (Amplifiers)	1	3.00
2	14175	- 2.5 Amp. Fuse	1	.25
3	11401	- Receptacle	1	.20
4	86248	- Octal Socket	1	.10
5	10995	- 2 Prong Plug	1	.05
6	P-1090	- Gyrophonola Motor	1	17.00
7	12028	- 8 Prong Plug	1	.25
8	10049	- Terminal	1	.05
9	11462	- Terminal Strip	1	.05
10	11781	- 3 Conductor Power Cord	1	.45
11	12768-A	- Selector Solenoid Plunger	1	.10
12	11817	- Motor Control Relay	1	1.35

FIGURE NO. 28 - SCHEMATIC DIAGRAM SOLENOID DRUM TYPE S020-7Z

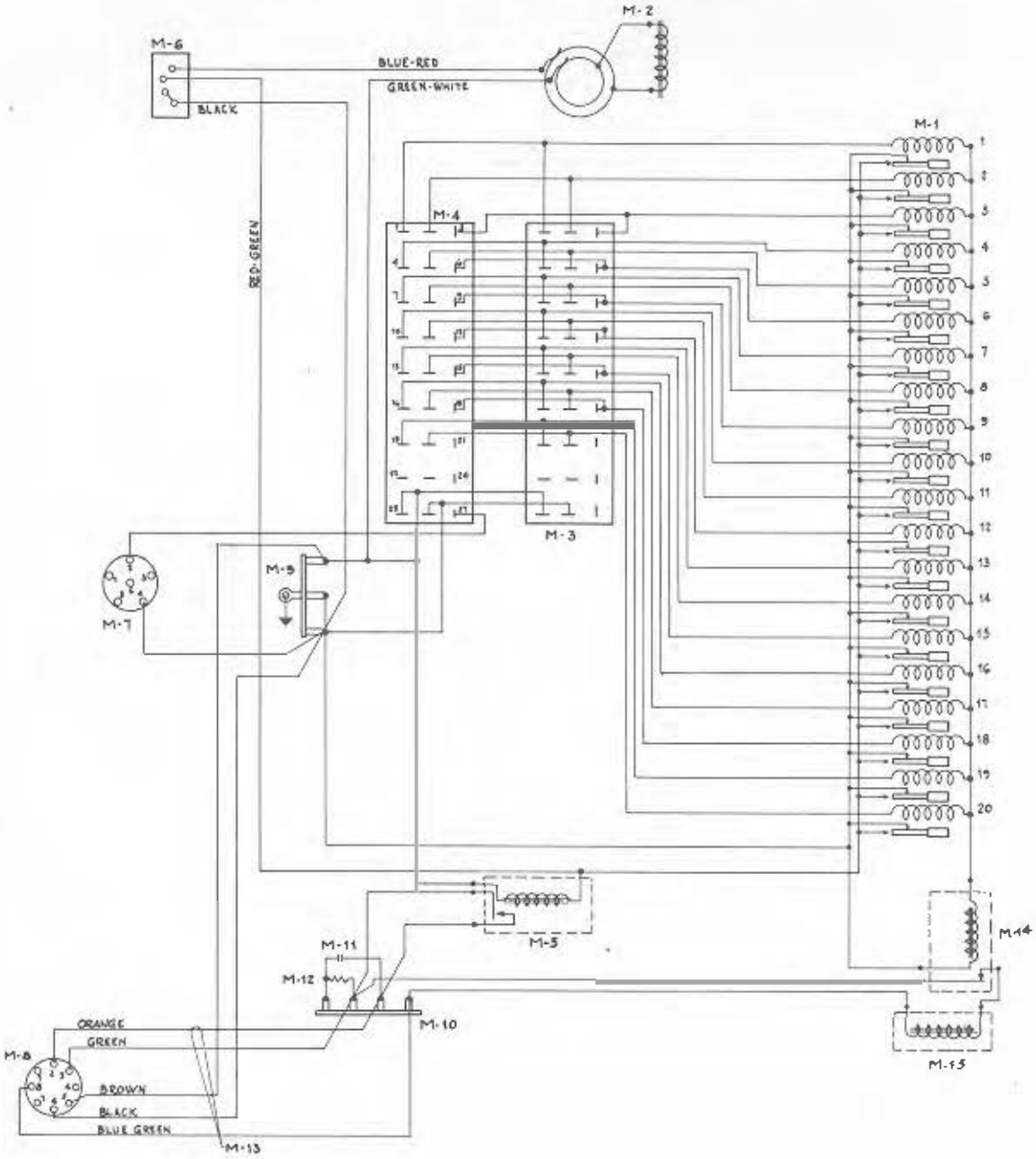

ITEM	PART NO.	DESCRIPTION	NO. REQ.	PRICE
1	11800	- Selector Solenoid	20	$ .20
2	11803-A	- Pin Cancel Relay Assembly	1	1.15
3	12017	- 27 Prong Spl. Socket	1	1.00
4	11202	- 27 Prong Socket	1	1.00
5	11817	- Motor Control Relay	1	1.35
6	11298	- 4 Prong Socket	1	.10
7	11759	- 6 Prong Socket	1	.15
8	12028	- 8 Prong Plug	1	.25
9	10059	- Terminal Strip	1	.05
10	11362	- Terminal Strip	1	.05
11	55045	- Condenser .1 Mfd. - 600 V	1	.15
12	82100	- 10 OHM 1/2 Watt Resistor	1	.07
13	11782	- Power Cord	1	.25
14	11782	- Counter Relay	1	1.80
15	11783	- Counter Unit	1	4.25

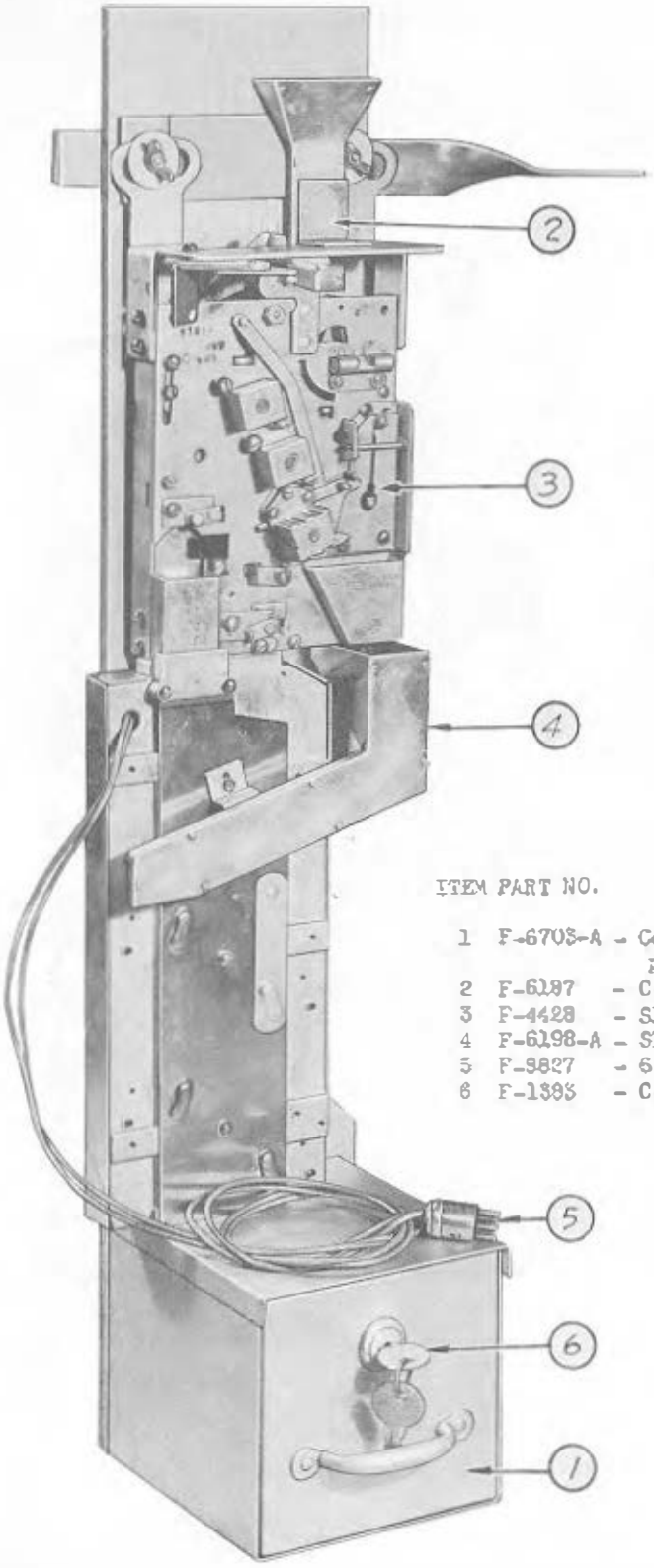

FIGURE NO. 29 -
COIN MECHANISM ASSEMBLY

ITEM	PART NO.	DESCRIPTION	NO. REQ.	PRICE
1	F-6703-A	- Coin Box Assembly (Complete).	1	$3.50
2	F-6187	- Coin Spout Funnel Assembly.	1	.25
3	F-4428	- Slug Ejector (5¢-10¢-25¢) .	1	10.50
4	F-6198-A	- Slug Return Chute Assembly.	1	.70
5	F-3827	- 6 Prong Plug.	1	.20
6	F-1393	- Coin Box Lock and Key . . .	1	.75

FIGURE NO. 30 - SLUG REJECTOR

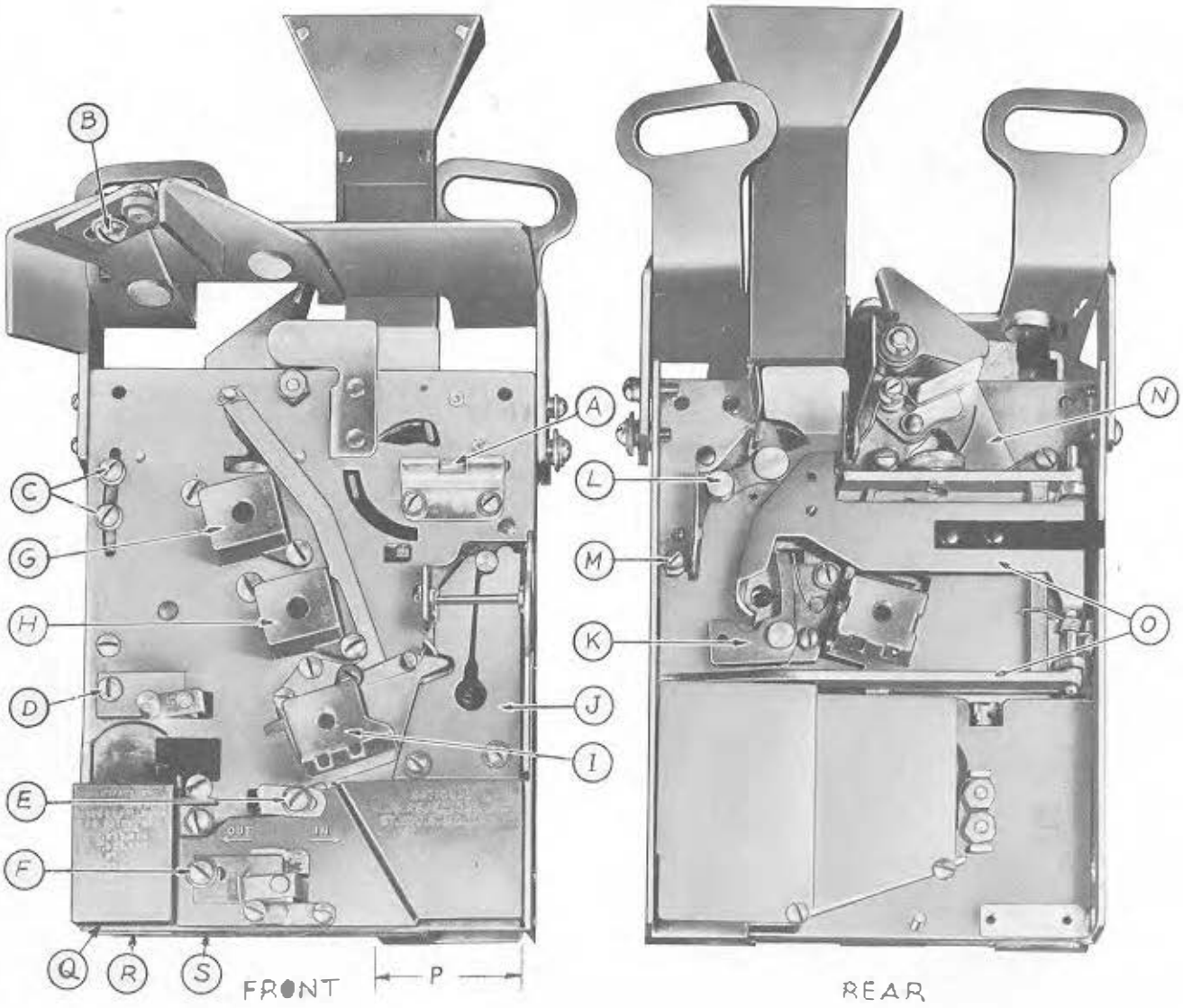

FIGURE NO. 31 - COIN TRIPPER ASSEMBLY

"A"-FRONT VIEW

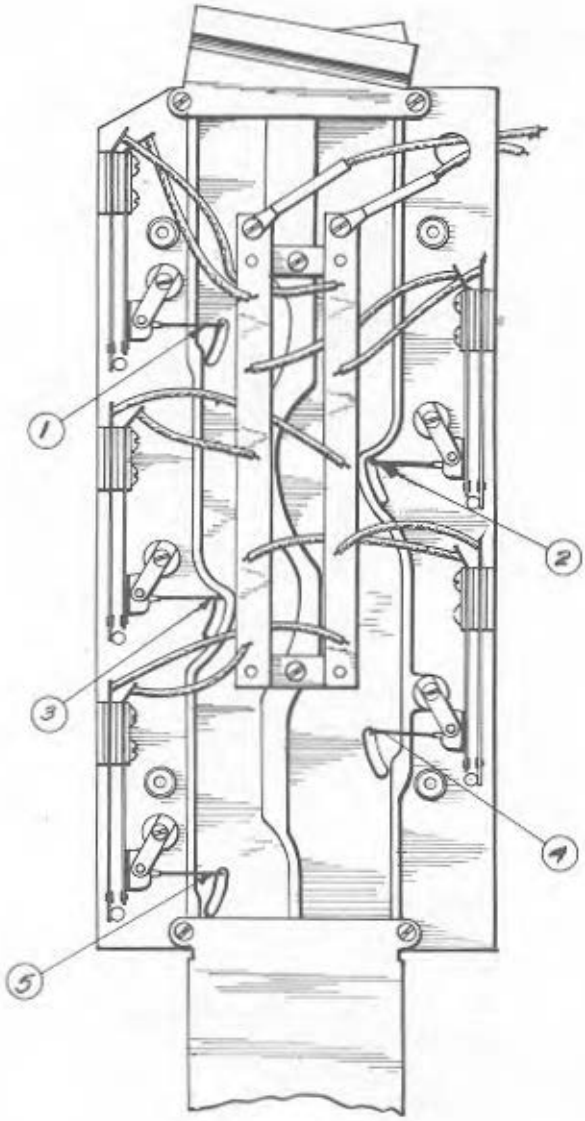

"B"-REAR VIEW

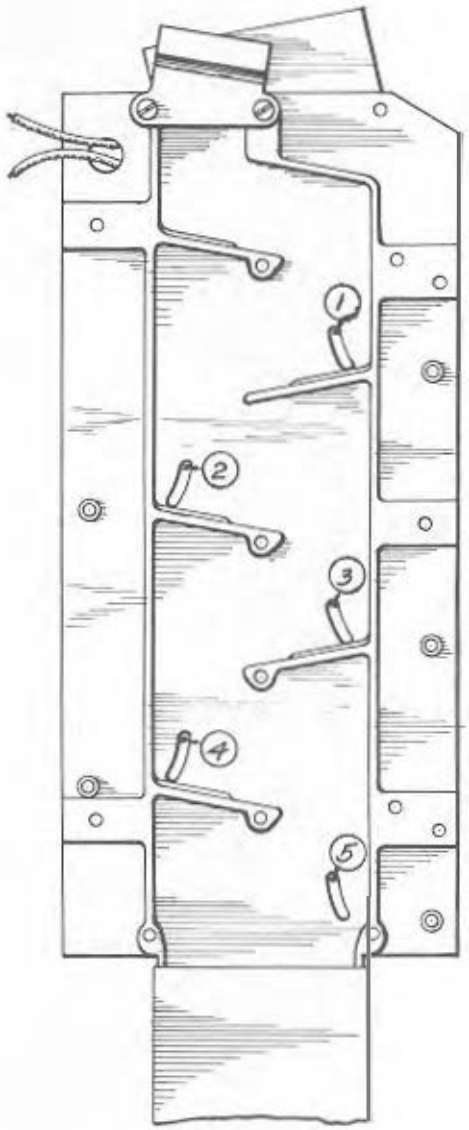

USE CARBON TETRACHLORIDE TO CLEAN SILVER CONTACTS - APPLY WITH SMALL BRUSH.

FIGURE NO. 32 - MODEL 7800 CABINET FRONT VIEW

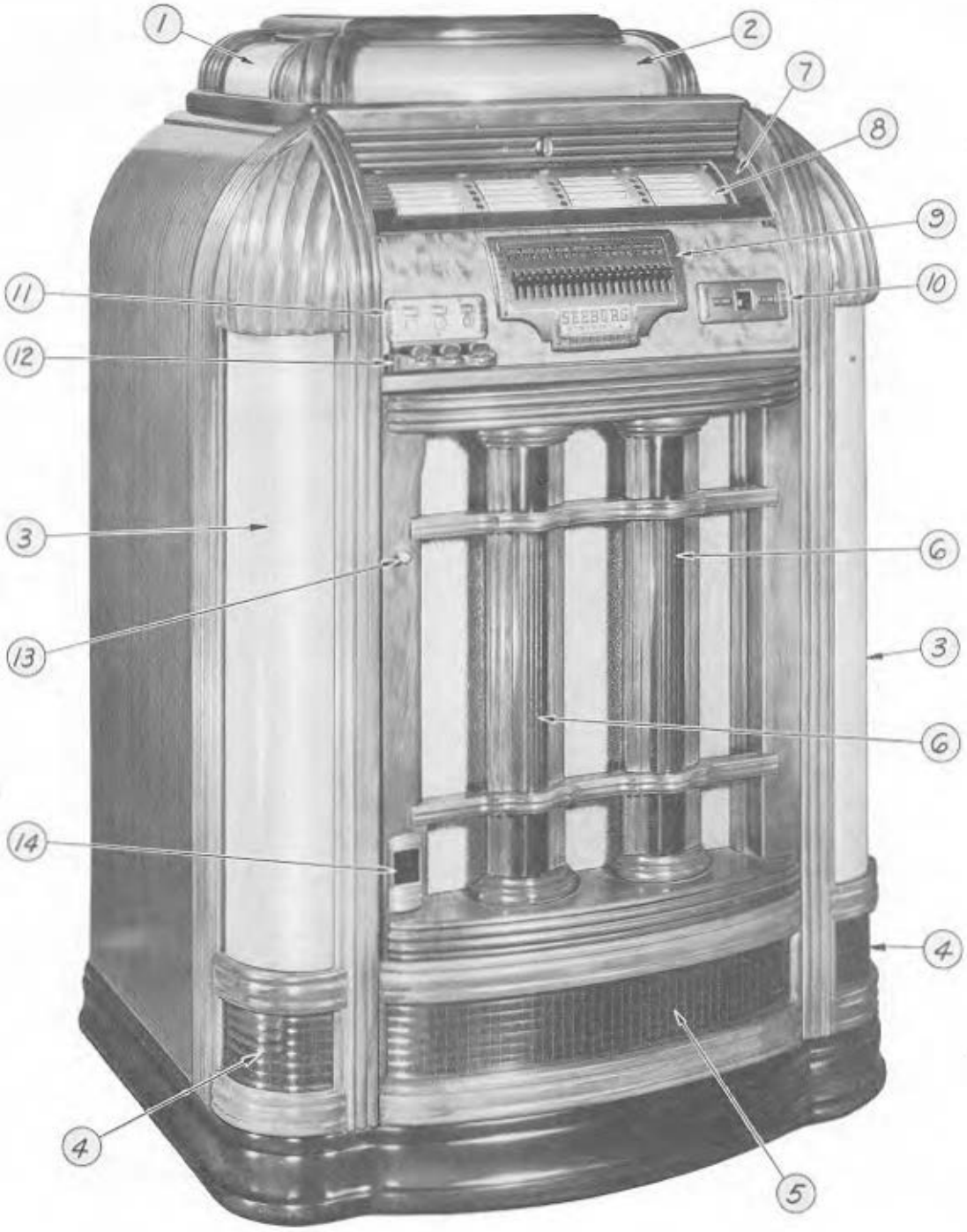

ITEM	PART NO.	DESCRIPTION	NO. REQ.	PRICE
1	P-7[illegible]	- Lid Side Plastic	2 ea.	$ .56
2	P-9820	- Curved Pilaster.	1	1.95
3	[illegible]	- Corner Pilaster.	2 ea.	2.65
4	P-9762	- Cross Beveled Plate - Corner	2 ea.	.85
5	P-[illegible]	- Cross Beveled Plate - Front.	1	1.85
6	P-7864	- Grill Door Plastic. . . .	2 ea.	1.10
7	P-7204	- Program Escutcheon.	1	2.10
8	P-7209	- Program Escutcheon Glass. . .	1	.74
9	P-7205	- Selector Escutcheon . .	2	1.75

ITEM	PART NO.	DESCRIPTION	NO. REQ.	PRICE
10	P-7200	- Play Indicator Escutcheon .	1	$ .75
11	P-[illegible]-A	- Coin Slot Escutcheon and Dial Assy. Complete	1	4.25
12	P-6565-A	- Coin Slot Escutcheon and Slide Assy. Complete	1	2.00
13	P-6350-A	- Slug Release Plunger Assy .	1	.60
14	P-6377-A	- Slug Receptacle.	1	.60

FIGURE NO. 33 - MODEL 7800 CABINET (FRONT VIEW) DOOR OPEN

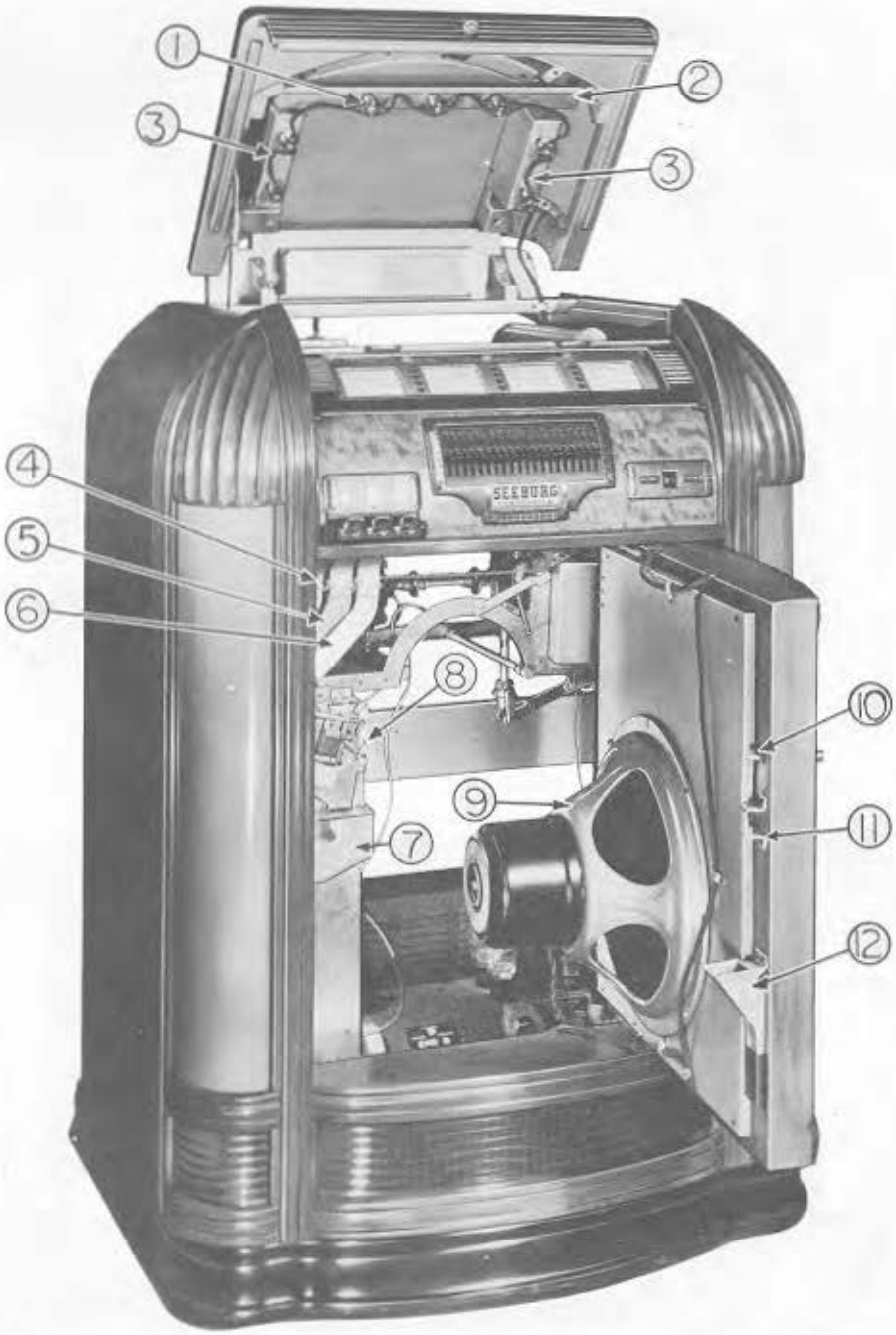

ITEM	PART NO.	DESCRIPTION	NO.REQ.	PRICE
1	F-7814	- Bayonet Socket.	21	$ .10
2	F-7807	- Horizontal Reflector (Lid).	1	.30
3	F-7808	- Small Horizontal Reflector.	2	.20
4	F-6074-A	- 25¢ Coin Chute & Funnel Assembly.	1	.85
5	F-6073-A	- 10¢ Coin Chute & Funnel Assembly.	1	.95
6	F-6072-A	- 5¢ Coin Chute & Funnel Assembly	1	.85
7	F-4557	- Slug Return Chute	1	.35
8	F-4334	- Slug Rejector Mech Assembly	1	14.
9	F-7018	- 15" Jensen Speaker.	1	11.00
10	F-6180-A	- Slug Release Assembly	1	.50
11	F-7521	- Door Latch Bracket.	1	.10
12	F-4401	- Slug Receptacle Extension	1	.35

FIGURE NO. 34 - MODEL 7800 CABINET (REAR VIEW)

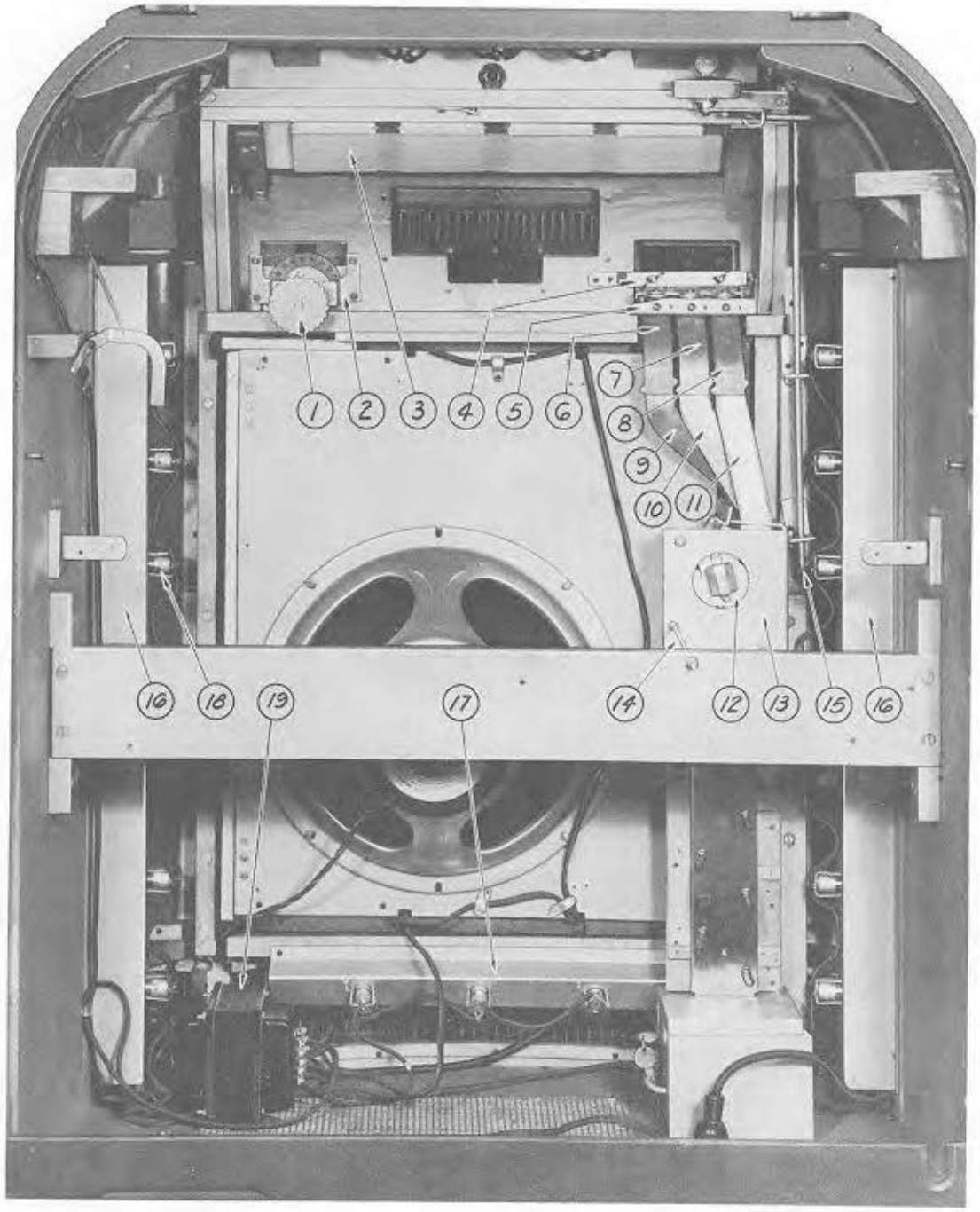

ITEM	PART NO.	DESCRIPTION	NO. REQ.	PRICE
1	P-1596	- Indicating Dial & Flange Assembly . .	1	$ .35
2	P-7875	- Indicating Dial Mtg. Bracket Assembly .	1	.15
3	P-7211	- Preview Light Shield	2	.25
4	P-7188	- Coin Slide Bracket .	1	.15
5	P-4020	- Coin Funnel Support Bracket.	1	.15
6	P-4018	- 5¢ Coin Funnel Assembly	1	.50
7	P-4018	- 10¢ Coin Funnel Assembly	1	.50
8	P-4017	- 25¢ Coin Funnel Assembly	1	.50
9	P-6064-A	- 25¢ Coin Chute Assembly	1	.35
10	P-6085-A	- 10¢ Coin Chute Assembly	1	$ .35
11	P-6085-A	- 25¢ Coin Chute Assembly	1	.35
12	P-4354	- 5¢ Rejector Mech. Assembly	1	14.00
13	P-4353	- 5¢ Rejector Mtg. Bracket.	1	1.00
14	P-4308	- Tie Rod.	1	.25
15	P-7705	- Lock Shaft	1	.50
16	P-7911	- Flanged Reflector. .	2	ea. .50
17	P-7809	- Horizontal Reflector	1	.35
18	P-7814	- Bayonet Socket . . .	21	ea. .10
19	P-7813	- Transformer.	1	5.25

FIGURE NO. 35 - MODEL 7850 CABINET (FRONT VIEW)

ITEM	PART NO.	DESCRIPTION	NO.REQ.	PRICE
1	F-7818	- Lid Side Plastic .	2 ea.	$ .55
2	F-9820	- Curved Pilaster. . .	1	1.95
3	F-7843	- Corner Pilaster. .	2 ea.	3.65
4	F-7844	- Grill Door Plastic	2 ea.	1.10
5	F-7742	- Cross Reeded Plate - Side	2 ea.	.85
6	F-7595	- Cross Reeded Plate - Front.	1	1.85
7	F-9400	- Program Escutcheon	1	3.50
8	F-9406	- Electrical Selector Dial Escutcheon	1	1.50
9	F-7200	- Record Playing Escutcheon . . .	1	$ .75
10	F-6362-A	- Coin Slot - Escutcheon & Dial Assy Complete. .	1	4.25
11	F-6363-A	- Coin Slot - Escutcheon & Base Assy	1	2.00
12	F-9456	- Program Escutcheon Glass.	4 ea.	.25
13	F-6358	- Slug Release Plunger.	1	.50
14	F-4577	- Slug Receptacle. .	1	.50

FIGURE NO. 36 - MODEL 7850 CABINET (FRONT VIEW) DOOR OPEN

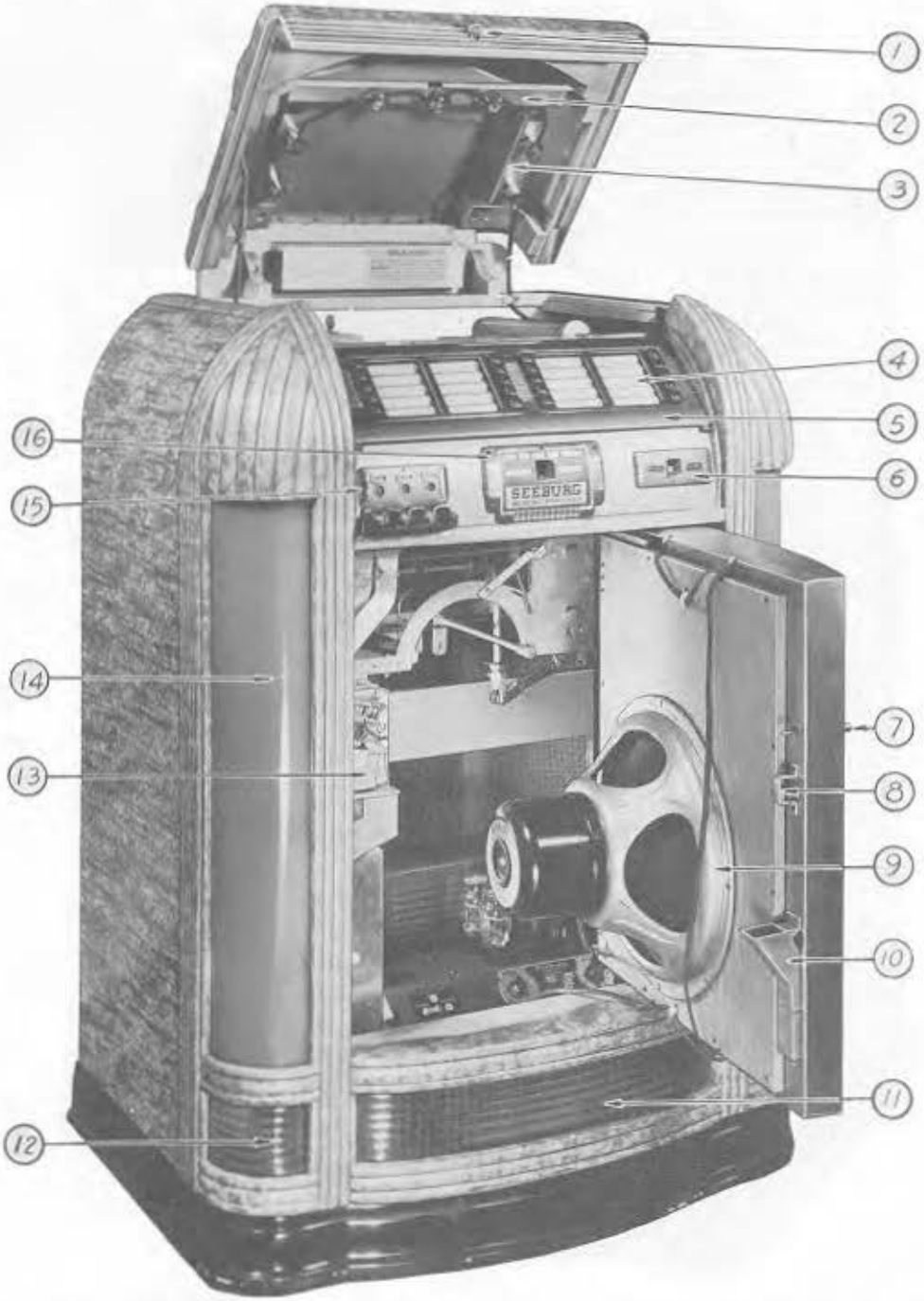

ITEM	PART NO.	DESCRIPTION	NO. REQ.	PRICE
1	F-7829	- Lock Assembly (Key-C-1145) . .	1	$ .95
2	F-7807	- Cover - Front Reflector. . . .	1	.90
3	F-7808	- Cover - Side Reflector. . . .	2	.80
4	F-5466	- Program Escutcheon Glass.	4	.25
5	F-8400	- Program Escutcheon	1	1.50
6	F-6187	- Play Indicator Escutcheon Assy.	1	.75
7	F-5838	- Slug Release Plunger Assembly	1	.50
8	F-7581	- Door Latch Bracket	1	.10
9	F-7019	- 15" Jensen Speaker	1	$11.00
10	F-4401	- Slug Receptacle Extension. . . .	1	.55
11	F-5595	- Base Front Plastic	1	1.85
12	F-7742	- Base Corner Plastic.	2	.35
13	F-4354	- Slug Rejector Mech. Assy	1	14.00
14	F-7843	- Cabinet Corner Pilaster. . . .	2	3.55
15	F-6159	- Coin Slide Escutcheon Assembly.	1	.75
16	F-9406	- Electrical Sel. Escutcheon Assy.	1	1.50

FIGURE NO. 37 - MODEL 7850 CABINET (REAR VIEW)

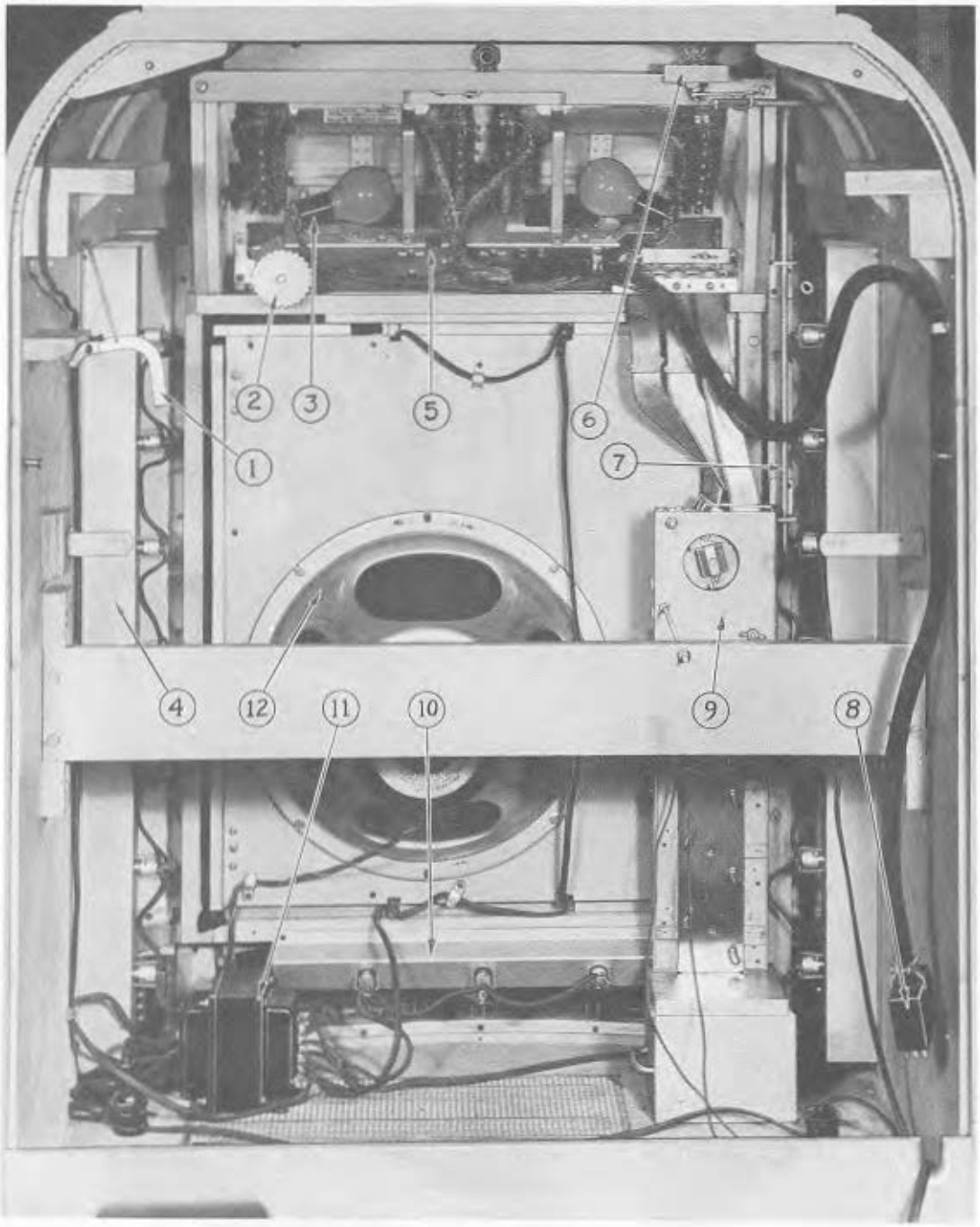

ITEM	PART NO.	DESCRIPTION	NO.REQ.	PRICE
1	F-8321	- Cancelling Lever.	1	$ .15
2	F-1324	- Indicating Dial Sprocket. . . .	1	.20
3	F-9472	- Lamp Socket . . .	2	ea. .10
4	F-7811	- Flanged Reflector	2	ea. .50
5	F-6745	- 2S-8Z	1	28.50
6	F-7829-A	- Lock Assembly . .	1	.75
7	F-7703	- Lock Shaft. . . .	1	$ .50
8	F-9401	- 27 Contact Plug .	1	1.00
9	F-4353	- Slug Rejector Mtg. Bracket. .	1	1.00
10	F-7809	- Horizontal Reflector (Lower)	1	.36
11	F-7815	- Transformer . . .	1	5.25
12	F-7018	- 15" Jensen Speaker	1	11.00

FIGURE NO. 38 - MODEL 8800 CABINET (FRONT VIEW)

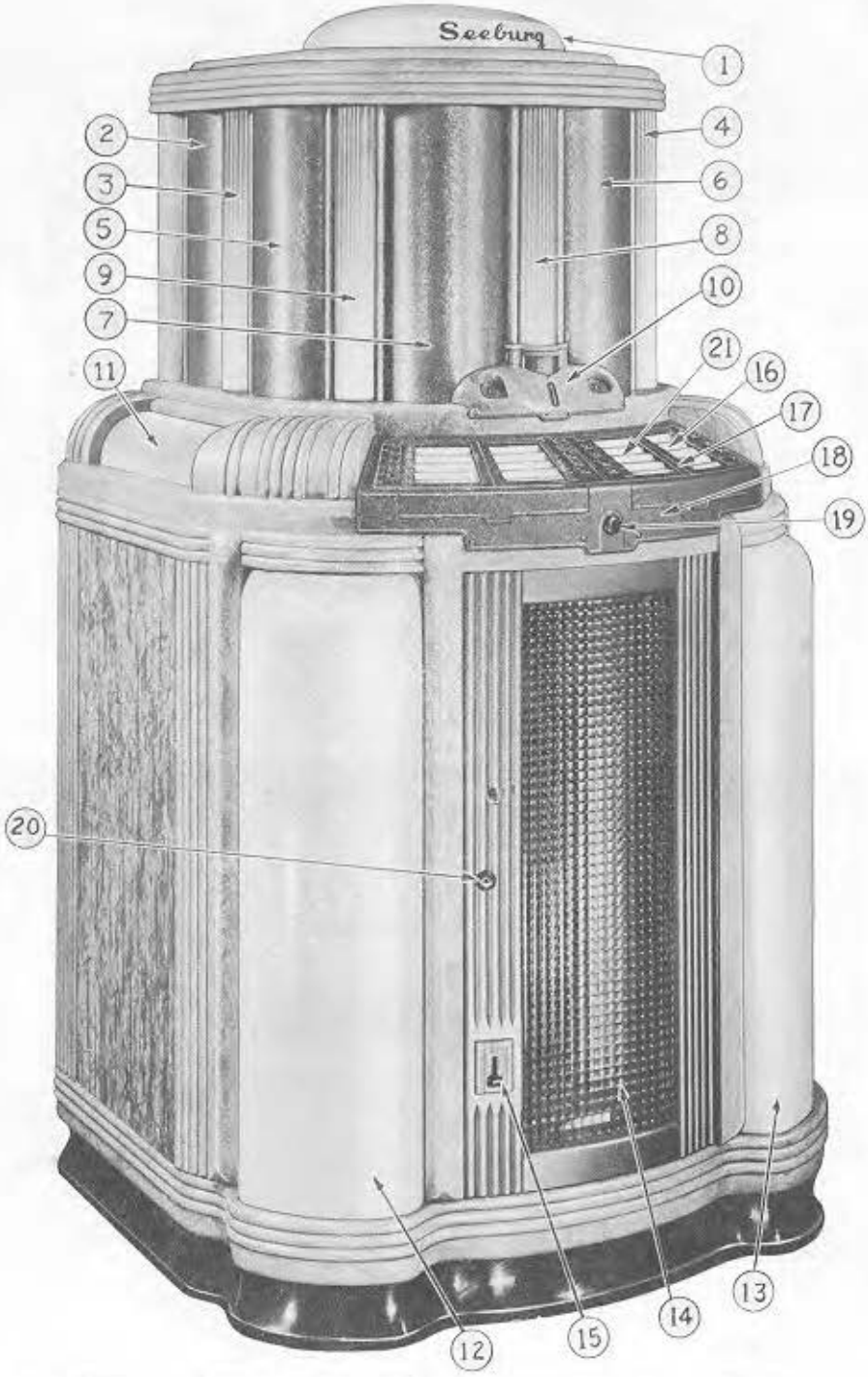

ITEM	PART NO.	DESCRIPTION	NO.REQ.	PRICE
1	P-8282	- Cover	1	$7.00
2	P-8220-A	- Grill Cloth & Screen Assy (Rear)	2	ea. .95
3	P-8861	- Grill Pilaster . . .	2	ea. .90
4	P-8061	- Grill Pilaster . . .	4	.90
5	P-8184-A	- Grill Cloth & Screen Assy(Side).	2	ea. .85
6	P-8185-A	- Grill Cloth & Screen Assy (R.H.)	1	1.25
7	P-8186-A	- Grill Cloth & Screen Assy (L.H.)	1	1.25
8	P-8861	- Grill Pilaster. . . .	1	.90
9	P-8861	- Grill Pilaster. . . .	1	.90
10	P-8230-A	- Coin Slot & Coin Rejecter Assembly	1	1.10

ITEM	PART NO.	DESCRIPTION	NO.REQ.	PRICE
11	P-8856	- Side Plastics R.H. & L.H.	2	ea. $1.25
12	P-8860	- Center Pilaster . . .	1	9.20
13	P-8850	- Center Pilaster . . .	1	9.00
14	P-8060	- Glass Door)	1	4.00
15	P-8828	- Slug Receptacle . . .	1	.26
16	P-8030	- Program Glass	4	.15
17	P-8834 P-8835	- Program Cover R.H. . - Program Cover L.H. .	1 1	1.10 1.10
18	P-8010	- Program Escutcheon. .	1	4.50
19	P-8834	- Program Lock Assy (with keys)	1	.75
20	P-8876	- Front Door Lock Assy (with keys)	1	.75
21	P-8831	- Program Holder Assy .	1	1.00

FIGURE NO. 39 - MODEL 9800 CABINET (FRONT VIEW)

ITEM	PART NO.	DESCRIPTION	NO. REQ.	PRICE
1	F-8862	- Dome.	1	$7.00
2	F-6136-A	- Grill Cloth and Screen Assembly R.H	1	1.25
3	F-9821	- Grill Pilaster. .	1	.90
4	F-6197-A	- Grill Cloth and Screen Assembly L.H	1	1.25
5	F-6250-A	- Coin Slot and Dial Escutcheon Assembly .	1	$1.10
6	F-8930	- Corner Pilaster .	2 ea.	9.00
7	F-8864	- Glass Panel . . .	1	4.00
8	F-8928	- Slug Receptacle .	1	.25
9	F-6207	- Grill Cloth and Screen Assembly	4 ea.	.95
10	F-9820	- Curved Pilaster .	2 ea.	1.35
11	F-9821	- Grill Pilaster. .	4 ea.	.90

FIGURE NO. 40 - HI-TONE CABINET ASSEMBLY (REAR VIEW)

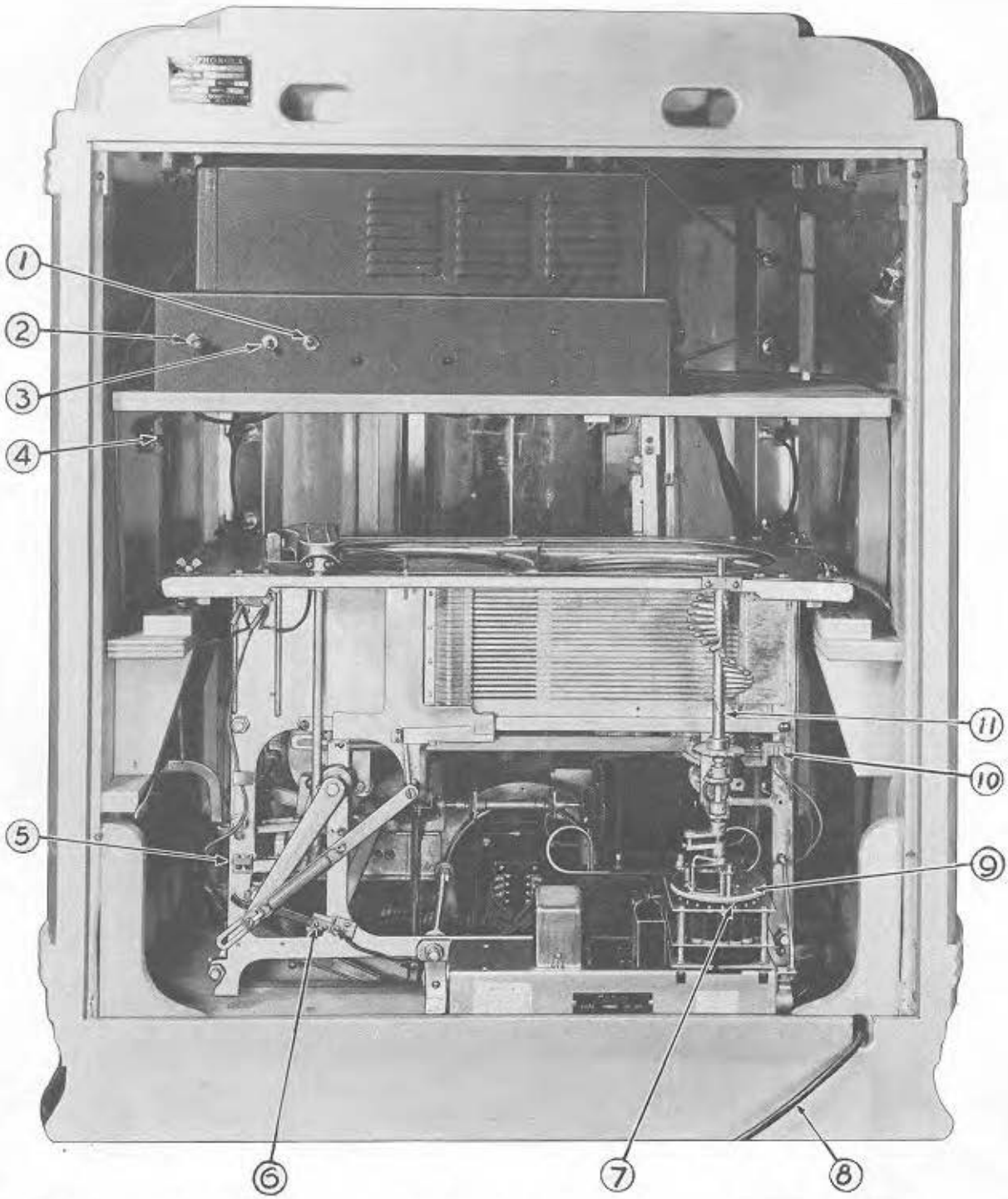

ITEM	PART NO.	DESCRIPTION	NO. REQ.	PRICE
1	F-1349	- Main Switch	1	$ .35
2	12031	- Light Switch. . . .	1	.45
3	F-5076	- Volume Control. . .	1	.75
4	F-8972	- Service Light Switch.	1	.25
5	F-8005-A	- Shorting Switch . .	1	.15
6	F-6179-A	- Motor Carryover Switch.	1	.35
7	11754	- Selector Disc Stop.	3 ea.	$ .05
8	F-1369	- Symphonola Line Cord.	1	.85
9	11764-A	- Selector Disc . . .	1	.75
10	F-6223-A	- Selection Cancel Switch.	1	.25
11	F-6178-A	- Rear Vertical Helix	1	1.60

FIGURE NO. 41 - HI-TONE CABINET ACCESSORIES (UPPER REAR VIEW)

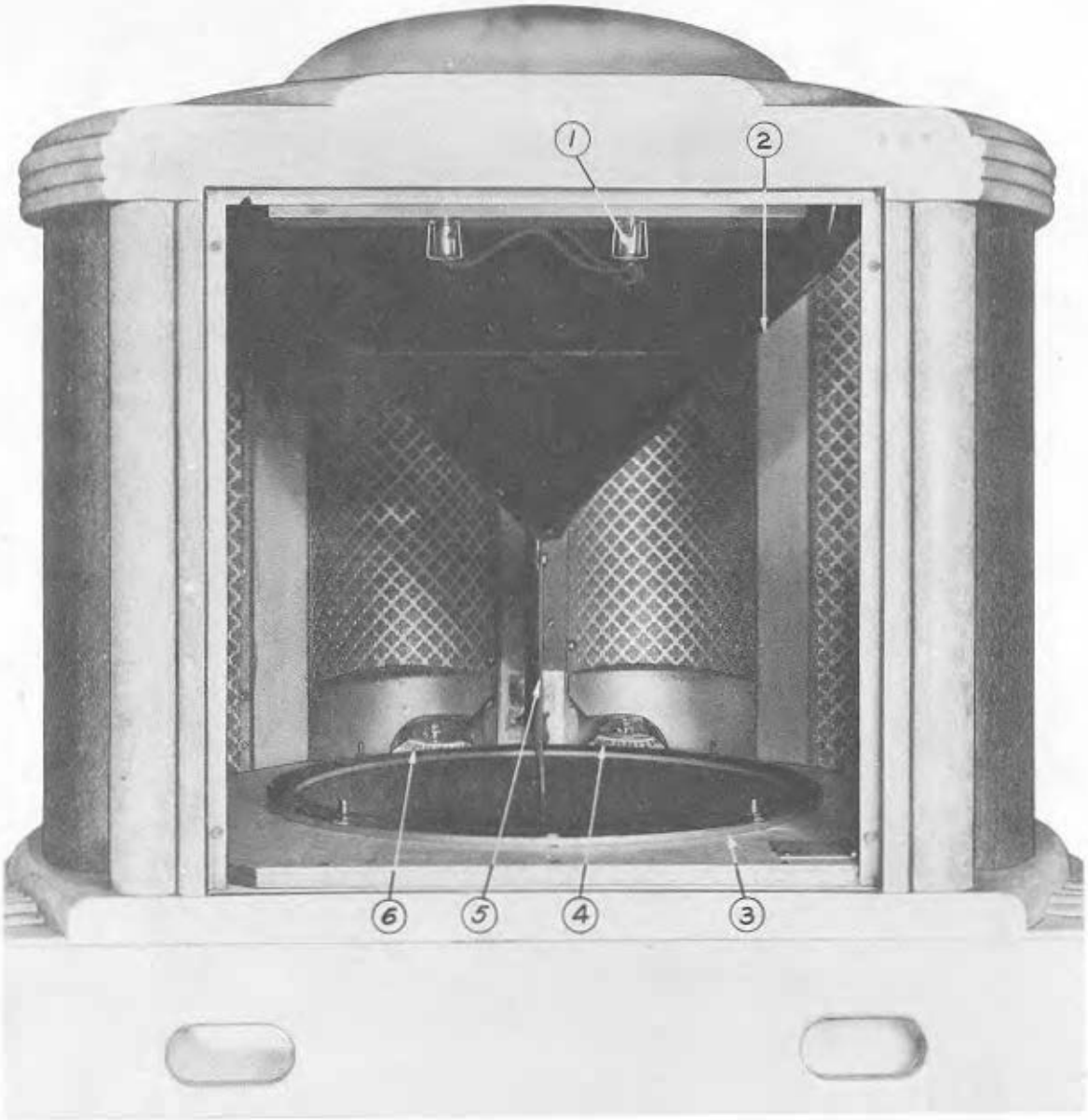

ITEM	PART NO.		DESCRIPTION	NO. REQ.	PRICE
1	F-7814	-	Light Socket Assembly	2	ea. $ .10
2	F-6210-A	-	Tone Projector Assembly - 8800.	1	1.75
	F-6211-A	-	Tone Projector Assembly - 9800.	1	1.75
3	F-9024	-	Speaker - 8800.		11.00
	F-9824	-	Speaker - 9800.		16.50
4	F-6221-A	-	Record Playing Dial Assembly.	1	.50
5	F-8954	-	Light Baffle - 8800	1	.43
	F-9842	-	Light Baffle - 9800	1	.43
6	F-6199-A	-	Credit Dial Assembly.	1	.50

FIGURE NO. 42 - HI-TONE CABINET ACCESSORIES (LOWER REAR VIEW)

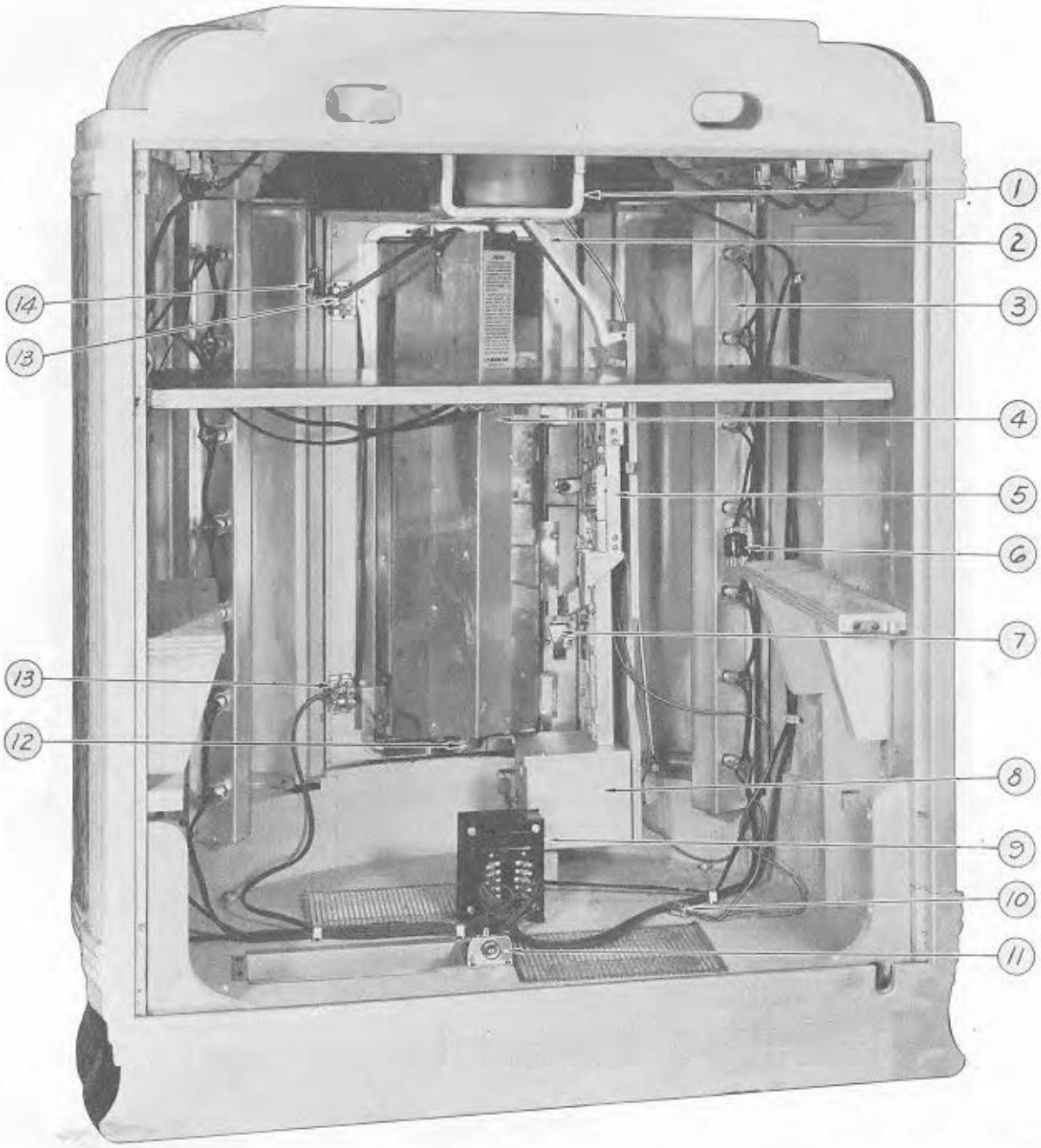

ITEM	PART NO.	DESCRIPTION	NO. REQ.	PRICE
1	F-8024	- Speaker - 8000. .	1	$11.00
	F-9924	- Speaker - 9000. .	1	16.50
2	F-6202-A	- Coin Chute Assy .	1	.40
3	F-8844	- Corner Pilaster Reflector . . .	2	ea. 1.00
4	F-8976	- Service Light Bracket	1	.10
5	F-4428	- Slug Ejector Assy. (5¢-10¢-25¢). .	1	10.50
6	F-7407	- 4 Prong Transformer Plug . .	1	.25
7	F-8829	- Slug Cup - Donor.	1	.30
8	F-8703-A	- Cash Box - (Complete with Lock and Key) .	1	3.50
9	F-7813	- Lighting Transformer	1	$ 5.25
10	F-8827	- 6 Prong Coin Switch Plug. . .	1	.20
11	F-8976	- Service Light Bracket.	1	.10
12	F-8882	- Cylinder Motor . .	1	3.50
13	F-8887	- Light and Motor Terminal Strip .	2	ea. .25
14	F-8496	- 2 Prong Plug . . .	1	.30

FIGURE NO. 43 - HI-TONE CABINET ACCESSORIES (FRONT DOOR OPEN)

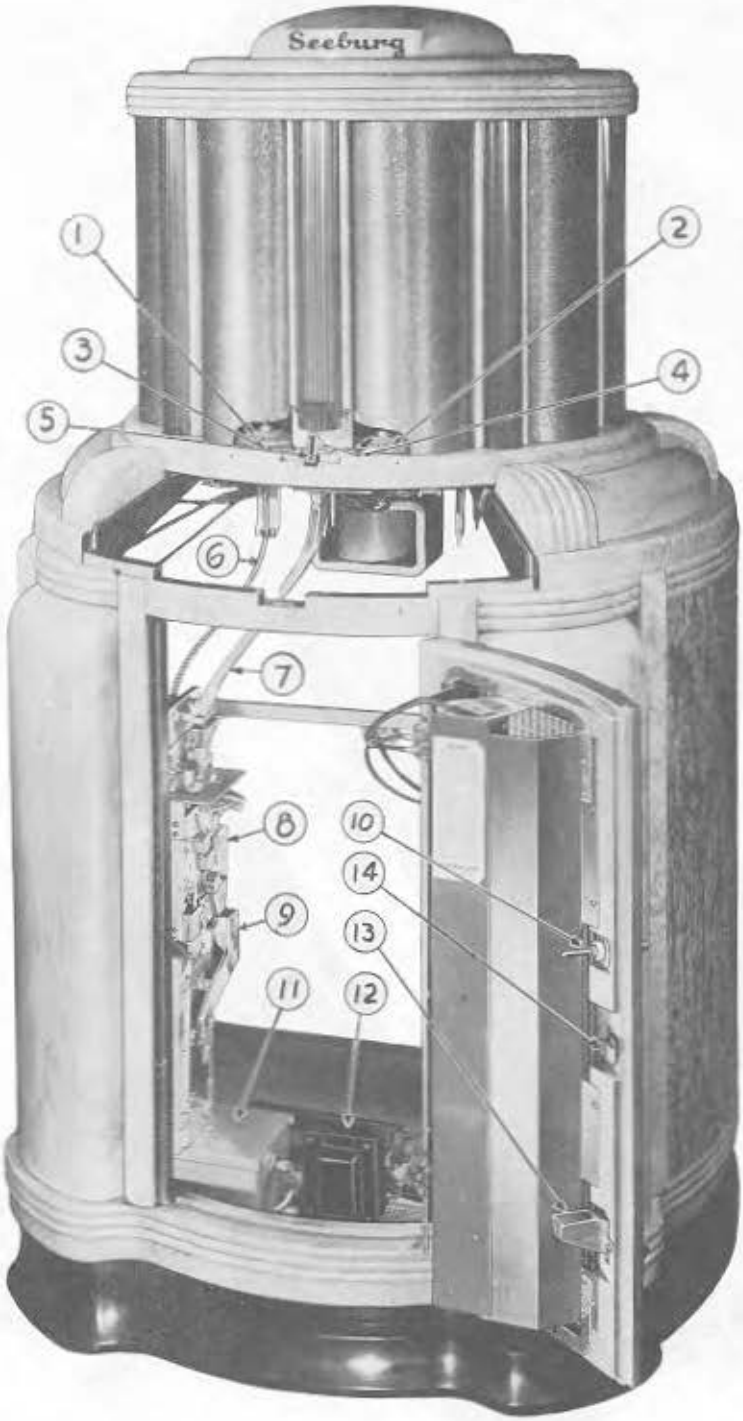

ITEM	PART NO.	DESCRIPTION	NO. REQ.	PRICE
1	P-[illegible]-4	- Record Playing Dial Assembly.	1	$ .50
2	P-[illegible]-4	- Credit Dial Assembly	1	.50
3	P-8839	- Dial Shaft Bearing Plate	1	.10
4	P-8838	- Dial Shaft Bearing Plate	1	.10
5	P-4439	- Coin Chute Panel .	1	.15
6	P-8861	- Dial Drive Cable. .	1	.85
7	P-8792	- Coin Chute Assembly	1	.40
8	P-4429	- Slug Rejector Mechanism (5¢-10¢-25¢)	1	10.50
9	P-[illegible]	- Slug Return Chute Assembly.	1	.70
10	P-8130-4	- Slug Release Assembly	1	.50
11	P-8703-4	- Cash Box Assembly (Complete) with Lock and Key. . . .	1	5.50
12	P-7913	- High Line Transformer.	1	5.25
13	P-8829	- Slug Cup - Inner. . .	1	.50
14	P-8878	- Lock Assembly (Key C-1414)	1	.75

FIGURE NO. 44 - FRONT DOOR LIGHTING ASSEMBLY

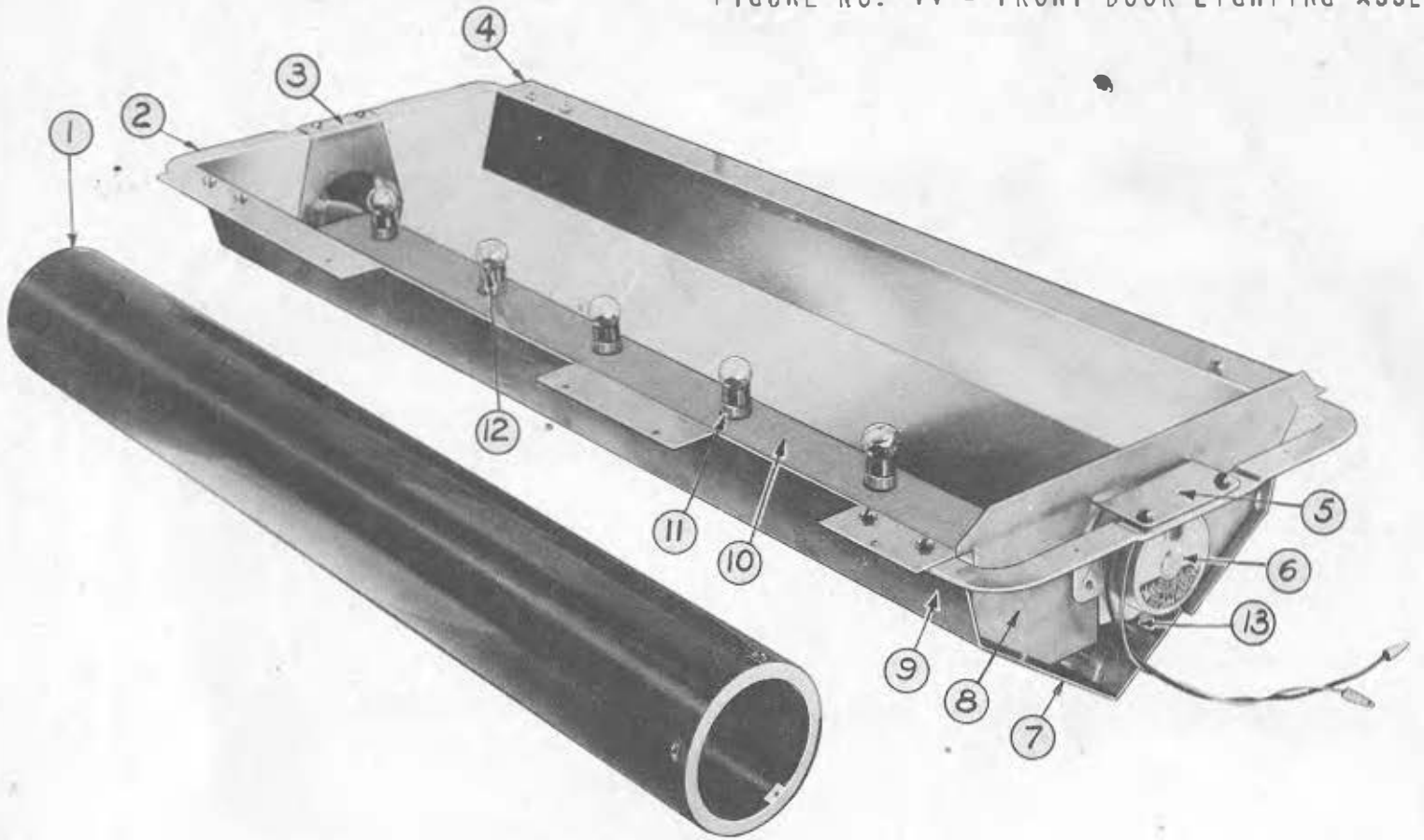

ITEM	PART NO.	DESCRIPTION	NO. REQ.	PRICE
1	F-8228-A	- Cylinder Plastic Assembly.	1	$ 1.25
2	F-8872	- Front Door Reflector - R.H	1	.90
3	F-6194-A	- Cylinder Bracket Assembly.	1	.20
4	F-8873	- Front Door Reflector - L.H	1	.90
5	F-8880	- Bottom Cylinder Bracket.	1	.40
6	F-8882	- Cylinder Motor	1	3.80
7	F-8885	- Cover Plate.	1	.35

ITEM	PART NO.	DESCRIPTION	NO. REQ.	PRICE
8	F-8874	- Bottom Front Door Reflector	1	$ .55
9	F-8949	- Door Reflector Bracket.	2	.30
10	F-8229-A	- Reflector and Pivot Block Assembly. .	1	.50
11	F-7810	- Socket Assembly	6	.10
12	F-7817	- #81 Light Bulb.	6	.10
13	F-6193-A	- Motor Disc Assembly	1	.30