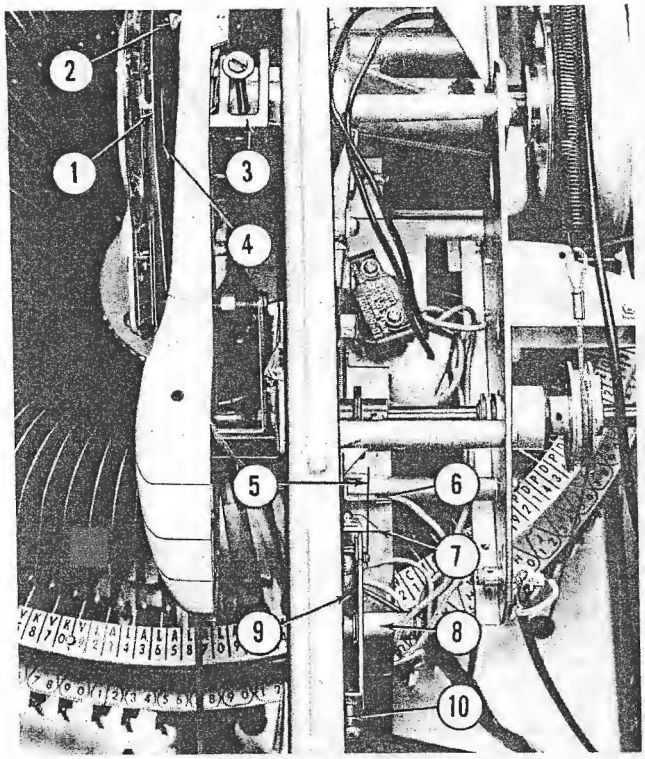

Fig. 81. TRIP SWITCH SETTING

1. Record Disc		X42226
2. Pick-up Needle	Cobra 57525	Stereo 116727
3. Latch Bracket, Tone Arm Feed-in		64423
4. Trip Groove		
5. Arm, Trip Switch		59583
6. Actuating Bracket, Part of Tone Arm		
7. Stop Bracket, Trip Switch		59432
8. Mounting Bracket, Trip Switch		59739
9. Micro Switch, Trip		57851
10. Screw, Adjusting, Trip Switch		73793-86

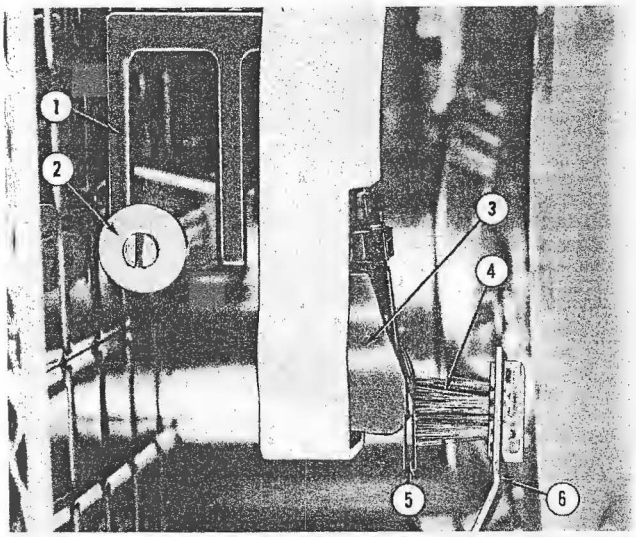

Fig. 82. TONE ARM NEEDLE BRUSH ADJUSTMENT

1. Latch Bracket, Tone Arm	64423
2. Stop Pin Assembly, Tone Arm	115660
3. Cartridge, Stereo	116725
4. Brush, Tone Arm	59830
5. Dimension 1/32" Maximum	
6. Arm and Brush Assembly	116075

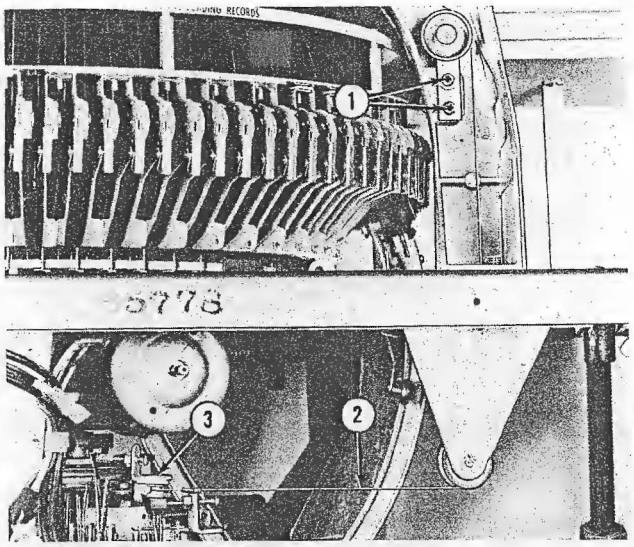

Fig. 83. TONE ARM BRUSH SETTING

1. Idler Pulley and Bracket Assembly	59717
2. Cable, Tone Arm Brush	59888
3. Actuating Arm, Transfer Switch	113299

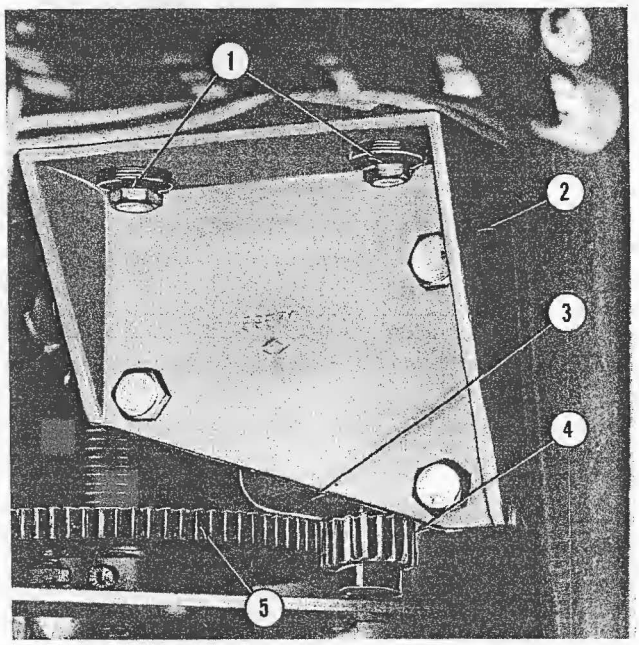

Fig. 84. CHANGER MOTOR PINION AND SELECTOR GEAR ADJUSTMENT

1. Mounting Screws, Adjustment	73793-118
2. Mounting Bracket and Motor Assembly	69066
3. Motor, Record Changer	65625
4. Drive Pinion	116997
5. Drive Gear, Selector Shaft	116986

y. ACTUATING ARM AND CABLE ADJUSTMENT

The actuating arm and cable adjustment for the turntable and tone arm (Fig. 85) should be made with the mechanism in play position. Set the adjusting screw (Item 9) so that the roller (Item 6) just rests against the stop wall of the cam with no slack in the cable (Item 7).

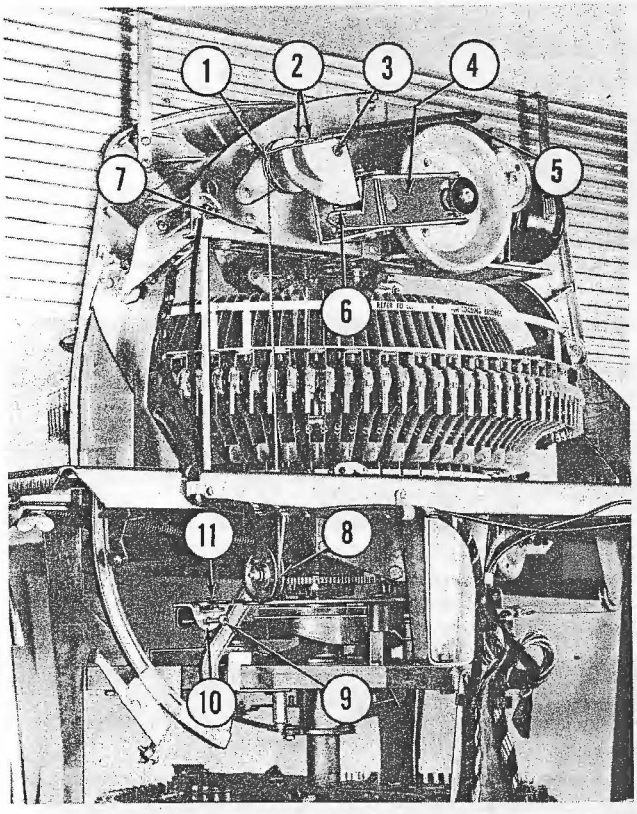

Fig. 85. ACTUATING ARM AND CABLE ADJUSTMENT, TURNTABLE AND TONE ARM

1.	Drive Pulley, Turntable and Tone Arm Cams	59415
2.	Stop Plate, Turntable Cam	60599
3.	Turntable Cam	59464
4.	Turntable Release Lever	59922
5.	Spring, Tension	61174
6.	Roller, Turntable Release Lever	59485
7.	Cable, Record Clamp and Tone Arm	59871
8.	Guide Pulley	59487
9.	Adjusting Screw	73502-99
10.	Actuating Arm	59688
11.	Slide Pin	59686

6. MAINTENANCE

a. INSTALLATION OF NEW TURNTABLE ACTUATING CABLE

(1) To install a new cable for the turntable actuating shaft assembly, pass the cable (Fig. 86, Item 2) through the hole in the drive pulley (Item 3) and form a loop at each end of the cable 3/4 of an inch long, clamping with sleeves (Items 1 and 4). Locate the cable in the pulley to conform to the dimensions shown at (Items 6 & 7) and lock securely with the set screw (Item 5).

(2) Remove the two screws holding the stop plate on the turntable cam (Fig. 85, Item 2) to allow the cam to rotate counterclockwise, as viewed from the rear, far enough to hook the lower loop in the cable over the slide pin (Item 11). The cable should pass over the idler pulley (Item 8).

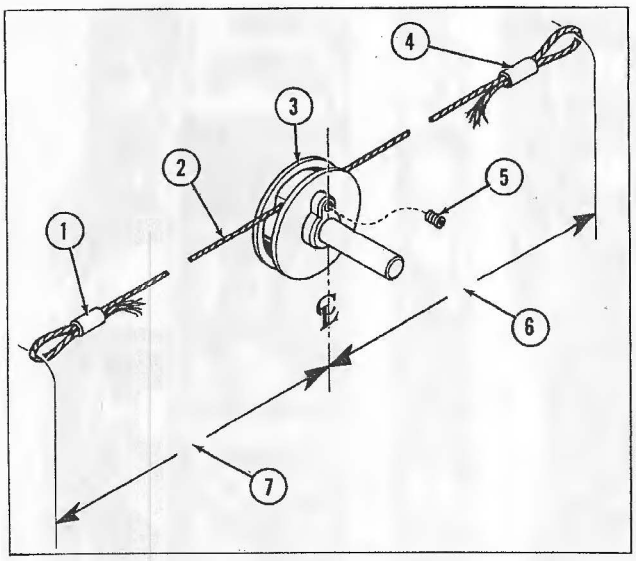

Fig. 86. TURNTABLE CABLE AND DRIVE PULLEY

1.	Collar (Sleeve)	61658
2.	Cable	59871
3.	Drive Pulley	59415
4.	Collar (Sleeve)	61658
5.	Set Screw	64427
6.	6 3/16" From Center Line to Inside of Loop	
7.	18 7/8" From Center Line to Inside of Loop	

The upper end of the cable will pass once around the drive pulley (Item 1) and hook to the spring (Item 5). The free length of the spring should be approximately 3-1/2". Replace the roller of the release lever (Item 6) back of the cam and replace the stop plate (Item 2).

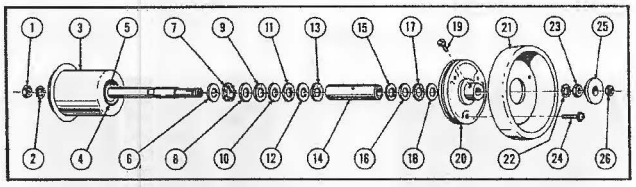

Fig. 87. SHIM PROCEDURE FOR ASSEMBLING TURNTABLE SHAFT

1.	Nut	59470
2.	Lockwasher	73607-12
3.	Turntable and Shaft Assembly	68102
4.	Oil Slinger	59571
5.	Washer on Shoulder of Shaft	56530
6.	Washer	59864
7.	Ball Race	59867
8.	Washer	59864
9.	Washer, Fiber	63732
10.	Washer, Metal Shim	63731
11.	Washer, Fiber	63732
12.	Washer, Metal Shim	63731
13.	Washer, Fiber	63732
14.	Sleeve and Bushing Assembly	64520
15.	Washer, Fiber	63732
16.	Washer, Metal Shim	63731
17.	Washer, Fiber	63732
18.	Washer on Shoulder of Shaft	56530
19.	Screw, Special	59399
20.	Pulley	64190
21.	Fly Wheel	59456
22.	Lockwasher	73607-12
23.	Nut	59470
24.	Screws, Sems	73533-38
25.	Plate, Record Clamp	63205
26.	Nut	73601-10

b. SHIM PROCEDURE FOR ASSEMBLING TURNTABLE SHAFT

Following installation of the thrust bearing group (Fig. 87, Items 6, 7 and 8) against the turntable, three fiber washers (Items 9, 11 and 13) and two metal washers (Items 10 and 12) should always be installed on the turntable end of the shaft. They should be installed starting with a fiber washer, a metal washer next, then a fiber, a metal and ending with a fiber. The turntable shaft is installed in the sleeve and bushing after which the shim washers are installed at the fly wheel end starting with a fiber washer and ending with a fiber washer alternating with metal washers until the shaft end play is within .008" to .013". After assembly the bearings should be well oiled with S.A.E. 10 motor oil.

c. LUBRICATION

The turntable motor bearings should be lubricated every three months with a good grade motor oil S.A.E. 10. Complete lubrication of the entire mechanism should be done every six months in accordance with the following instructions.

(1) Houghton Absorbed Oil, Type L-3, part number 21934A, should be used at points where a non-fluid type lubricant is required such as: The main cam working surfaces (cam tracks), gears and pinions, turntable worm gear and pinion, spring anchor points and the bearings of heavy linkage.

(2) A good grade motor oil, S.A.E. 10, should be used on all light weight linkage and lever bearings and the following points: Record lift arm guide roller bearings, the annular bearings under the record carrier, turntable drive shaft and motor bearings, the main cam shaft, the tone arm actuator shaft assembly, the record carrier shaft, the turntable sleeve bearing, the center bearing of the changer motor.

(3) To oil the record lift arm bearings turn the record carrier until the half inch hole, located one and a half inches off center in the carrier casting is directly in front. At this position the half inch hole will align with a hole in the chassis mounting plate. Oil through the two holes will be absorbed by a felt pad which will lubricate the record actuator arm bearings.

(4) The reduction gears of the changer motor assembly are packed with a non-fluid lubricant (Alvania No. 1), part number 55206A and should require no further lubrication. However the center bearing of the changer motor, provided with an oiler on the top, should be oiled every six months.

d. CLEANING

(1) Electrical contacts are nominally made of silver and are therefore, quite soft. Cleaning should be done with a burnishing tool made expressly for the purpose or a strip of heavy bond paper.

(2) To maintain the inherent customer play appeal it is advisable to periodically clean the phonograph inside and out. The decorative background and the Dinoc sides of the cabinet may be wiped down with a mild soap and warm water. The plastic plate on the record guide assembly should be cleaned with an antistatic cleaner. Use caution in cleaning to avoid damage to the stylus. The front door glass should be cleaned with clear water.

e. REPAIRS TO FINISH

The side panels of the cabinet are clear lacquer finished over a "Dinoc" dry strip transfer which may be ordered as needed (part number 116647). The piece is used either on right or left side and will be trimmed to fit. The upper side plate is also covered with a "Dinoc" dry strip transfer and may be ordered by part number 116594, R.H. or 116596, L.H.

(1) Minor scratches and abrasions, not into the wood, may be treated directly with a touch-up brush and colors lifted from a piece of the Dinoc transfer. Thoroughly clean the surface to be repaired to remove any wax or foreign material. Dip the touch-up brush in undiluted welding solution (A1171) and lift the color desired from a patch of the transfer. Blend into area to be repaired. Allow each color to dry before applying the next one. After thoroughly drying, the area should be sprayed with satin finish clear lacquer (Inter Chemical 12575 Water White) or equivalent. Do not use a brushing lacquer.

(2) When major repairs are to be made fill deep scratches and uneven areas with lacquer glazing putty and allow to dry for one half hour. Sand to a perfectly smooth surface. If the sanding operation cuts through to the bare wood, spot spraying with clear lacquer must be done to seal the wood pores from the moisture of the welding solution. Air dry the lacquer spray. Using a repair panel (116647) select and cut out a section to match the grain at the repair area. Lift the transfer from the backing. Sandpaper is effective for starting.

(a) Sponge the repair surface liberally with clear water and apply the selected section of transfer. The presence of the water will permit sliding of the transfer to match up the grain.

(b) When properly positioned, sponge the surface of the transfer to provide slippage for squeegee operation to remove excess water.

(c) Pick up one corner of the transfer and roll it back until approximately one half of the repair surface is exposed. Sponge on a liberal coat of diluted (4 parts water to 1 part A1171) welding solution and lay the transfer back in position.

(d) Keeping the surface of the transfer wet with water begin squeegeeing from the center to the outer edges, using firm overlapping strokes to remove all air bubbles and excess welding solution.

(e) Roll back the other half of the transfer until adhesion of the first half can be detected, and proceed in the same manner as above. The squeegeeing operations should always be done with short, firm, overlapping strokes on a surface well moistened with water.

(f) Wash the surface thoroughly with water to remove all excess welding solution and prevent marking the finish. Should any bubbles appear, slice them with a razor blade and press out the air or welding solution. Repeat washing.

(g) Allow the panel to air dry over night before spraying with satin finish clear lacquer as mentioned under minor repairs.

f. INSTALLATION INSTRUCTION

(1) In removing the shipping cleats and the various "tie-downs", carefully note the instructions on the respective tags. These tags will be found at the important "tie-down" points for your convenience in unpacking and as a guide for preparation of the phonograph when it is again trucked. It is very important that the wooden strips be reinstalled under the record carrier and the four chassis "hold-down" thumb screws be tightened during any transportation. It is recommended that the "tie-wires" through the "hold-down" thumb screws be saved and reinstalled before transporting the phonograph. During operation, the chassis "hold-down" thumb screws should be completely unscrewed from the chassis. They are provided with retainers to keep them in the mounting brackets. The chassis should set squarely on its four mounting springs and float freely all around.

(2) Do not expose the phonograph to direct sunlight or place in close proximity to hot radiators or space heaters. Excessive heat inside the cabinet will warp the records, resulting in unnecessary service calls.

(3) It is recommended that all cables entering the phonograph be made long enough to permit the phonograph to be moved far enough for ease in servicing and floor cleaning. Service calls will be reduced if the cables are neatly formed and held off the floor by a suitable hook on the rear door of the phonograph.

(4) A level footing should be provided for the phonograph to insure correct operation of the coin mechanism. Should leveling be necessary it may be accomplished by removing the caster where height is required and installing 7/16" iron washers over the caster pin. Replace the caster and check the phonograph for correct coin operation.

(5) Do not over fuse the electrical circuits. Doing so may result in severe damage to the power supply. Should trouble develop in the low voltage circuits it is suggested that a test lamp be used in checking the circuits instead of over fusing. A convenient test lamp can easily be made with the following parts:

1 - Cap for fuse post
1 - Blown bus fuse
1 - Lamp socket for,
1 - G.E. #305 lamp
2 - 4" lengths of plastic coated #20 stranded wire

The steps in assembling the test lamp follow:

(a) Drill through the center of the fuse cap using a number 18 drill.

(b) Drill a hole in the center of each ferrule on the blown fuse using a number 36 drill.

(c) Solder one of the wires to the end of one ferrule being careful to keep the hole clear.

(d) Pass the other wire through both ferrules and solder to the end opposite the first wire soldered in step (c).

(e) Pass both wires through the fuse cap and solder to the socket terminals.

(f) Insert the G.E. #305 lamp in the socket.

(g) Plug the test assembly into the fuse holder of the particular low voltage circuit to be tested. If the circuit is shorted or grounded the lamp will light to full brilliance. If the circuit is normal the lamp will light at partial brilliance or not at all.

7. 259 STEPPER ASSEMBLY

a. GENERAL

The stepper assembly (Fig. 88) used with the 2410 and 2410S phonographs is mechanically similar to the stepper used with the 2400 and 2400S phonographs. The electrical circuits are wired as shown in the functional schematic, 116402 and the

wiring diagram, 116847, in the schematic section of this manual. Should it be desired to use this stepper with a 2410 or 2410S phonograph purchased without stepper the model 259 stepper (Part No. 117106) may be installed. Instructions for installation are contained with the assembly.

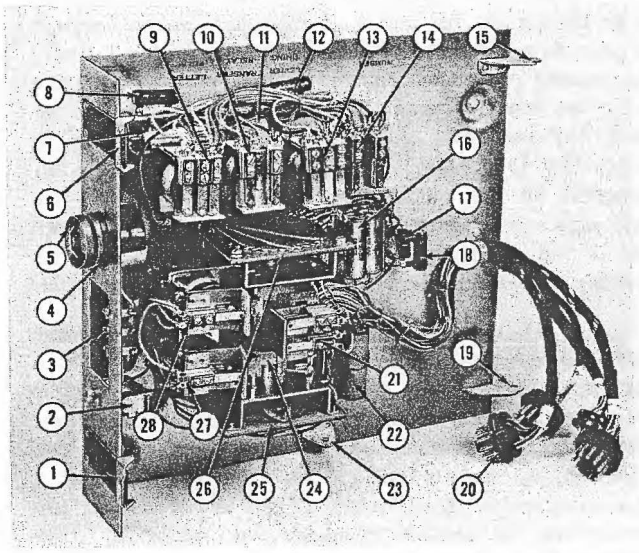

Fig. 88. 259 STEPPER ASSEMBLY

1.	Spring and Clip Assembly	115832
2.	Relay, Pulse	117048
3.	Terminal Strip	62496
4.	Socket, Fustat	61857
5.	Fustat, 3 Amp.	61858
6.	Spring and Clip Assembly	115832
7.	Capacitor, 100 Mfd., 50V., Letter Timing Relay	73862
8.	Resistor, 50 Ohms 5 W.	72986-2
9.	Relay, Letter Pulse	68940
10.	Relay, Transfer	115884
11.	Capacitor, 250 Mfd., 50V., Latch Relay	71499
12.	Resistor, 150 Ohm 5W.	71883-2
13.	Relay, Letter Timing	117061
14.	Relay, NumberTiming	115889
15.	Hinge Bracket	115835
16.	Capacitor, 100 Mfd. 50V., Number Timing Relay	73862
17.	Resistor, 560 Ohm 2W.	72474-32
18.	Resistor, 50 Ohm, 5W.	72986-2
19.	Hinge Bracket	115835
20.	Plug, 11 Pin (4)	54878
21.	Relay, Latch	114346-A
22.	Capacitor, .5 Mfd., 400V.	73099-240
23.	Pivot Bracket Assembly, Fall Support	115829
24.	Nylon Ratchet Wheel, Letters	114346-D
	Nylon Ratchet Wheel, Numbers	114346-C
25.	Contact Plate Assembly, Letters	114346-F
	Contact Arm, Letters	114346-H
26.	Contact Plate Assembly, Numbers	114346-E
	Contact Arm, Numbers	114346-G
27.	Step Magnet, Letter	114346-B
28.	Step Magnet, Number	114346-B

b. OPERATION

The stepper unit is provided with a numbered terminal strip (Item 3) for connecting the three conductor cable to the wall boxes. Number three terminal is the 24 volts A.C. fused by the 3 ampere fustat (Item 5). This circuit will accommodate four 5200 or 5202 Wurlitzer wall boxes. If more boxes are required a Model 222 booster power supply should be installed which will accommodate four additional wall boxes. A Model 222 booster should be used for each additional group of four wall boxes. The number two terminal is grounded and is a common circuit for the 24 volt a.c. return and the impulse circuit. Number one terminal is the impulse circuit which when closed to ground by the rotary contact arm in the wall box will pulse the relay (Item 2). The two sets of contacts on the pulse relay close the ground through two sets of normally closed contacts on the transfer relay (Item 10) to the number step magnet (Item 28) and the number timing relay (Item 14). The contacts on the number step magent (Item 28) close on the first pulse to energize the latch relay (Item 21). The latch relay serves to hold the step up ratchet wheels in position as they are rotated by the step up magnet and its associated pawl. At the completion of the number pulses from the wall box the number timing relay will release while the latch relay is delayed in releasing by the 250 mfd. capacitor (Item 11) discharging through its winding. During this interval the transfer relay will be energized through a normally open contact on the latch relay (closed at this time).

The first letter pulse from the wall box will now close the pulse relay (Item 2) and its contacts closing, complete the circuits through the normally open transfer relay contacts, at this time closed, to energize the letter step magnet (Item 27) and the letter timing relay (Item 13). The letter pulse relay (Item 9) will be energized by a pair of contacts on the letter timing relay (Item 13). The operation of the letter pulse relay closes a pair of contacts to hold the latch relay until the wall box completes its selection cycle. Pulsing of the letter step magnet rotates the letter ratchet wheel and contact wiper to a position determined by the number of letter pulses received from the wall box. After completion of the wall box cycle the letter timing relay releases completing the selection circuit from ground through contacts on the letter pulse relay (Item 9), contacts on the latch relay (Item 21), contacts on the number timing relay (Item 14) through the stepper rotary contact arm to energize the driver solenoid which positions the rocker plate assembly in the selector drum to the proper number position. The second wiper arm of the number pulse rotary contact wiper isolates the a.c. selection circuits for selector coils one to five or six to ten. The 24 volt a.c. circuit is completed through contacts on the letter timing relay (Item 13), contacts on the letter pulse relay (Item 9), a rotary contact wiper on the number pulse step up unit, a rotary contact wiper on the letter pulse step up unit and then to the selected letter coil. The letter coil circuit is fused through the 8/10 ampere slow-blow fuse mounted on the junction box.

8. SOUND SYSTEM

a. MONOPHONIC SOUND SYSTEM

(1) The 2400 series monophonic phonograph sound system (Fig. 89) consists of a Model 536 single channel amplifier (Item 1) with built in "automatic level control", low inertia tone arm (Item 5) with Zenith "Cobra" pick-up, and a high fidelity speaker and cross-over network (Items 2, 4 and 6). The speaker compliment consists of one 12" p.m. heavy duty, one 12" p.m. mid-range and one 7" p.m. high frequency.

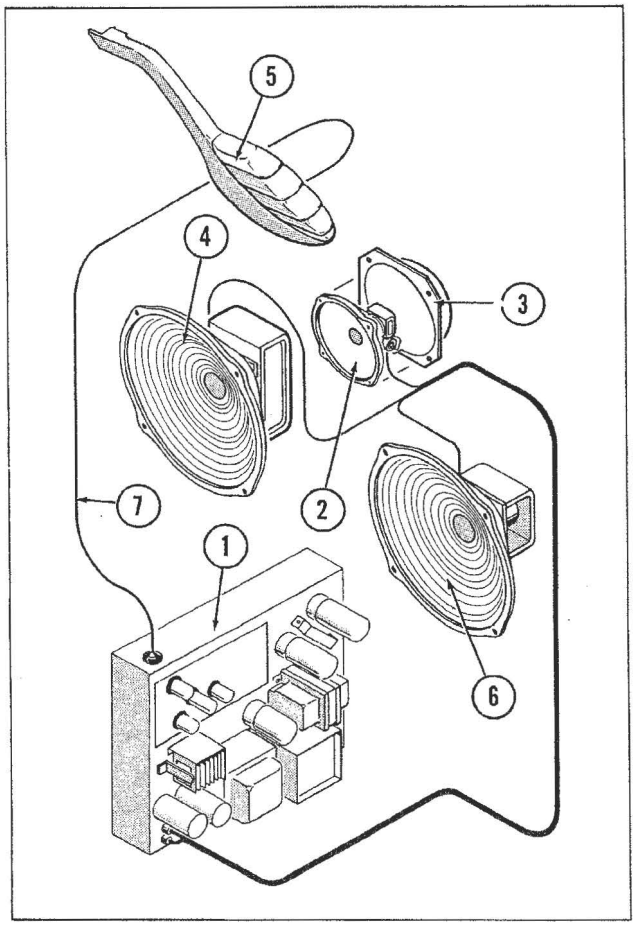

Fig. 89. SOUND SYSTEM - MONOPHONIC

1.	Amplifier, 536, Less Tubes	113153
2.	Speaker. 7"	114054
3.	Cover, 7" Speaker	114058
4.	Speaker, 12" Heavy Duty	114006
5.	Tone Arm Assembly	116142
6.	Speaker, 12" Mid Range	65192
7.	Input Cable Assembly	110190

The out-put of the Model 536 Amplifier is provided with 8 Ohm terminals and C.V. terminals with a ratio fader control for use when auxiliary speakers are used in conjunction with the phonograph. Remote volume control together with cancel facilities is available by use of Kit 147 (Part Number 65337).

(2) The low inertia tone arm is balanced as described under Figure 80. The Zenith Cobra pick-up provides maximum efficiency in the conversion of record modulation to electrical impulses with a minimum of needle and record wear.

(3) The Model 536 amplifier is slide mounted on the inside left panel of the phonograph cabinet to provide good accessibility. The main line switch, the manual reject switch, the volume control and the fader switch are mounted on the rear end of the amplifier chassis accessible through the opening along the left edge of the lower back door. Also mounted on the rear of the amplifier chassis, but only accessible when the lower back door is removed, is the auxiliary speaker terminal strip and the service outlet with a maximum rating of 4 amperes.

(4) Mounted along the top side of the amplifier chassis will be found the single prong input socket, a six prong mute switch socket, a single prong socket for connecting an auxiliary amplifier, treble and bass controls and a socket for connecting a remote volume control. The amplifier chassis is also provided with a double single prong socket for connecting the cabinet speakers, an outlet for connecting the cabinet lights and fuse holders for the 2A.D.C. fuse, the 2A. line fuse for the amplifier, the 8A. fuse for the 24V. A.C. circuits and the 15A. main line fuse. There is one eleven prong socket for connecting the electric selector to the amplifier. The A.C. and D.C. power for the phonograph is supplied by components on the amplifier chassis.

(5) The types and functions of the amplifier tubes are listed in the following table.

TYPE	DESCRIPTION	FUNCTION
1-12AU7	Twin Triode	1st Section-Oscillator and Detector. 2nd Section - Variable resistance.
1-6AN8	Pentode Triode	Pentode Section. Voltage Amplifier. Triode Section - Cathode Follower.
1-12AX7	Twin Triode	1st Section-Voltage Amplifier 2nd Section - Rectifier
1-6AU6	Pentode	Voltage Amplifier
1-12AX7	Twin Triode	Phase Inverter
2-6L6GB	Beam Power Tetrode	Out-put
1-5U4GB	Dual Diode	Full Wave Rectifier

b. THEORY OF OPERATION, 536 AMPLIFIER

The cobra pickup operates in conjunction with an oscillator using a section of the 12AU7 tube shown in the schematic on pages 43-44 of this manual. The frequency is approximately 2.5 megacycles. As the stylus and vane of the pickup responds to variations in the record groove it is moved toward and away from the small coil in the pickup cartridge which is part of the oscillator circuit. This movement of the stylus and vane amplitude modulates the oscillator, since power is absorbed by the vane - when closest to the coil the vane absorbs the most power thereby reducing the amplitude of oscillation, and when farthest away from the coil the vane absorbs the least power allowing the amplitude of oscillation to increase.

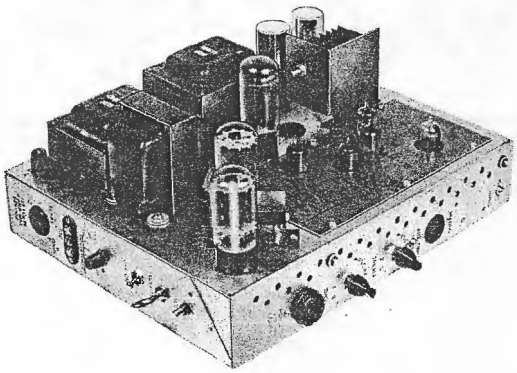

Fig. 90. MODEL 536 AMPLIFIER, LESS TUBES 113153

The oscillation (2.5 MC) taking place does so over a curved portion of the current-voltage characteristic of the 12AU7 section. As a result detection of the modulated oscillation is obtained, and the output voltage appearing at the plate of the tube contains the 2.5 MC and the audio frequencies of the record. By means of C-6 (100MMF) capacitor the 2.5 MC is filtered out, but the audio frequencies are not attenuated and they pass through the various stages of the amplifier.

(1) Referring to the block diagram (Fig. 91) it will be seen that a portion of the signal is taken from the voltage amplifier section of the 6AN8 and amplified by the first section of the 12AX7 tube. The above D.C. voltage therefore varies with the level of the record being played. This action then is used to compensate for differences in levels of various records causing low level records to be raised in volume as the signal passes through the first section of the 6AN8 while high level records will be cut down. Between the second section of the 6AN8 and the 6AU6 the signal level is set by the loudness control passing on to the 12AX7 phase inverted which drives the two 6L6GB tubes in a push-pull output system. Constant voltage output is obtained by use of the variable negative feed-back from the secondary of the output transformer. It compensates for various auxiliary speaker loads and permits maximum output with minimum distortion.

(2) During record changing intervals the amplifier is muted by the mute and play switch shown in Figures 70 and 71. It consists of one double pole, single throw switch; one single pole, double throw switch and one single pole, single throw switch mounted on a bracket at the rear of the changer and operated by a lever and an adjustable lobe on the main cam. The left hand set of contacts, as viewed from the rear is the double pole, single throw section, which shunts the audio signal between the 6AU6 and the phase inverter 12AX7. The other contact of this left hand section is used on the Model 538 stereo amplifier to mute the second channel. On the 536 monophonic amplifier the two mute contacts are tied together at pins one and six of the mute switch socket.

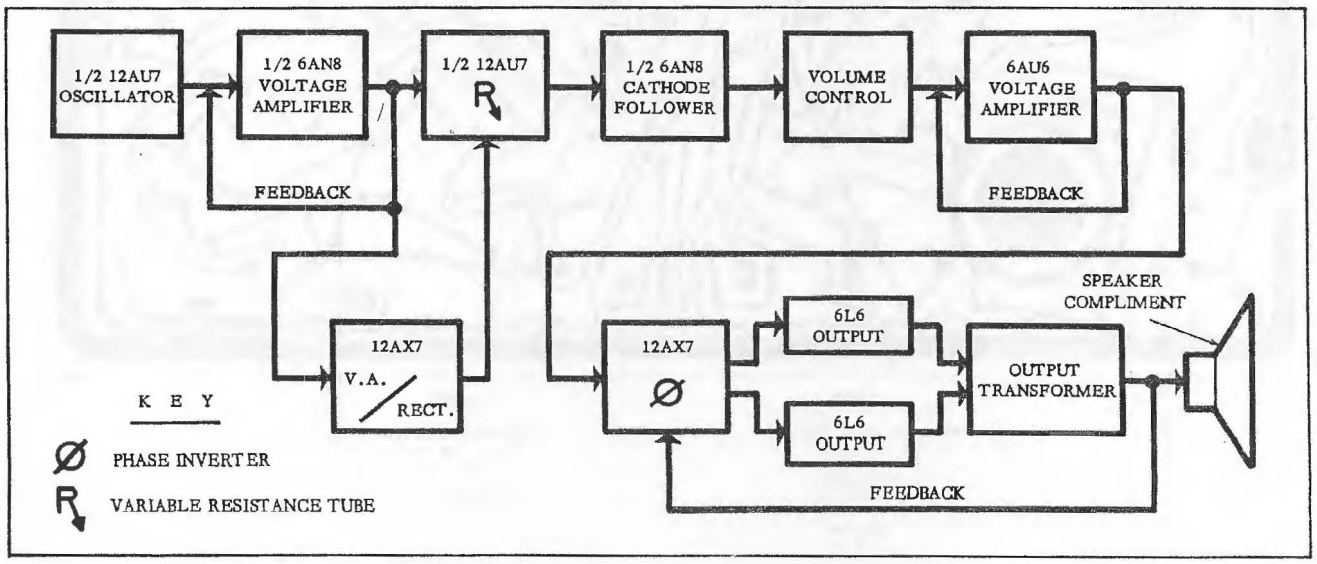

Fig. 91. MODEL 536 AMPLIFIER BLOCK DIAGRAM FOR SIGNAL TRACING.

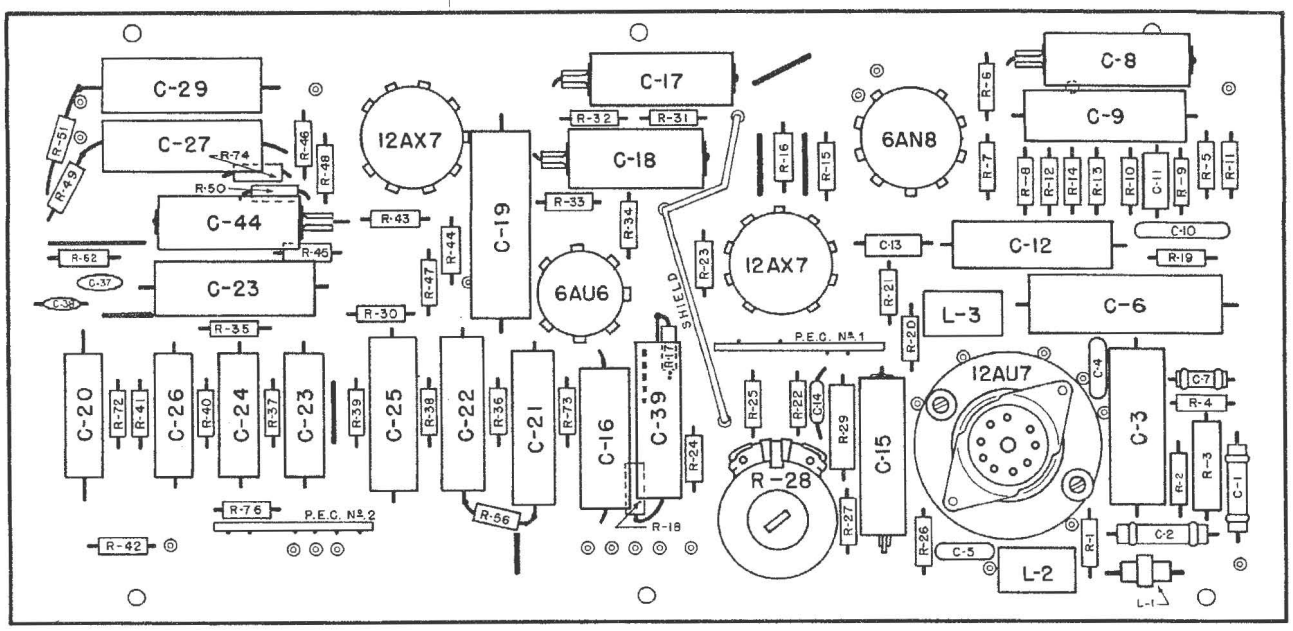

NOTE: For Code Values See Schematic Diagram 114317-3

Fig. 92 PRINTED CIRCUIT BOARD - MODEL 536 AMPLIFIER (TOP SIDE)

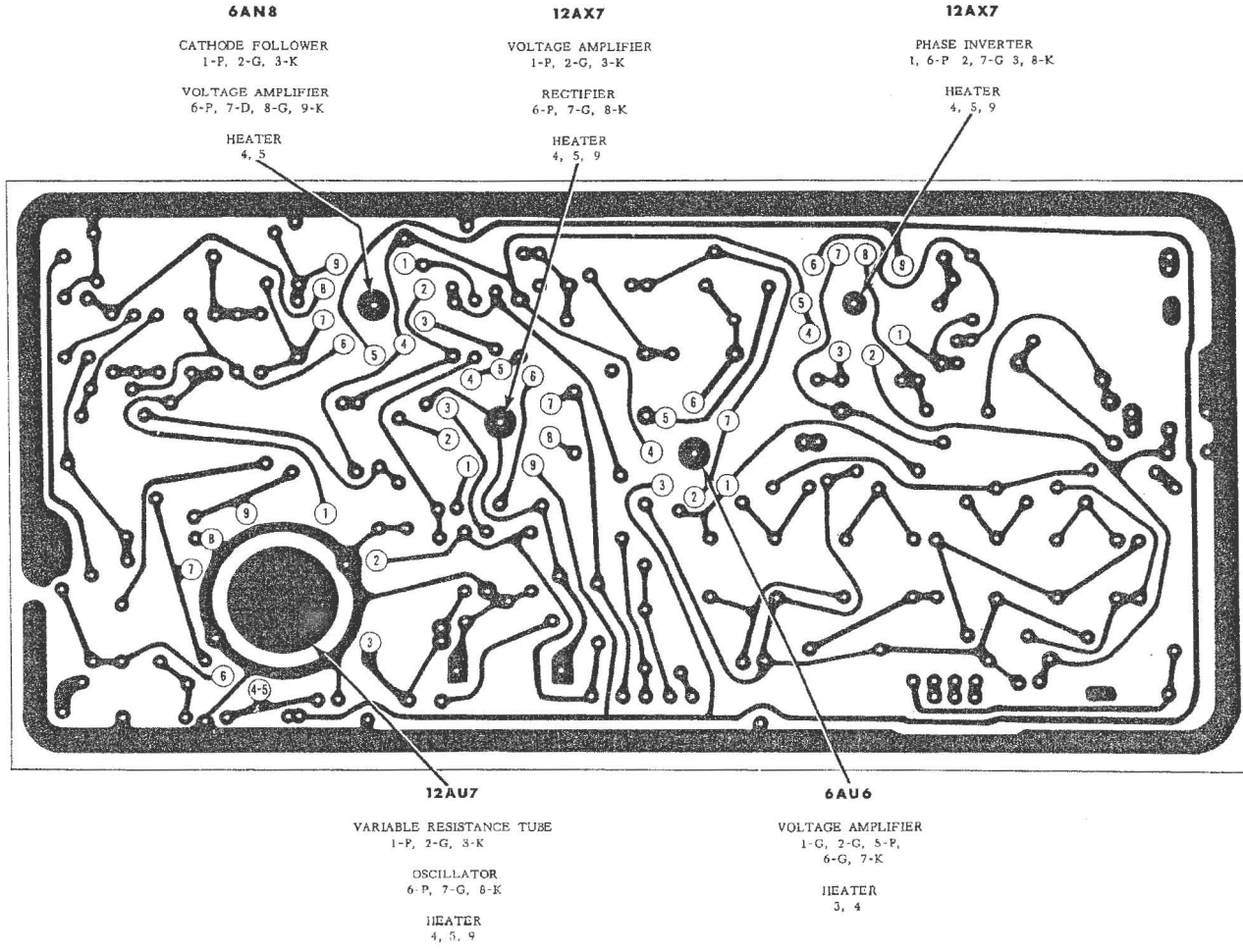

Fig. 93 PRINTED CIRCUIT BOARD - MODEL 536 AMPLIFIER (UNDER SIDE)

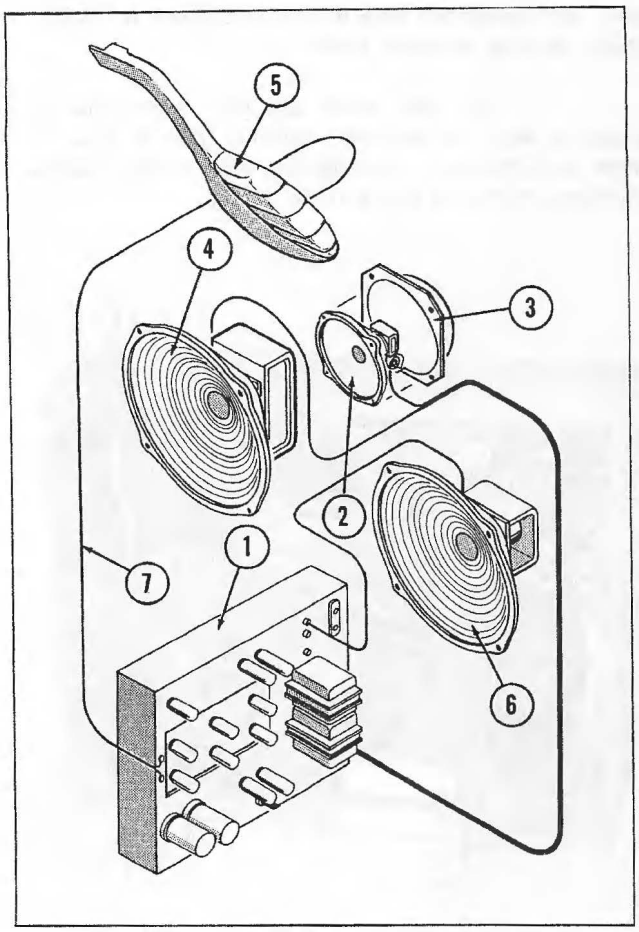

Fig. 94. SOUND SYSTEM - STEREO

1.	Amplifier, 538 Less Tubes	116181
2.	Speaker, 7"	114054
3.	Cover, 7" Speaker	114058
4.	Speaker, 12" Heavy Duty	114006
5.	Tone Arm Assembly	116167
6.	Speaker, 12" Mid Range	65192
7.	Input Cable Assembly (2)	110190

(3) The center set of contacts forming the single pole double throw section serves to stop the changer motor when the record is in play position and to close a dynamic brake circuit across the motor armature.

(4) The right hand set of contacts are normally closed and places a D.C. voltage to the time constant circuit of the automatic level control reducing the output during record changing phases. The switch opening at play position allows a gradual build-up in signal strength to the pre-set level of the manual loudness control.

(5) Current for the heater elements of the amplifier tubes is supplied from two separate power transformers. The filament windings of these transformers are connected in series and in phase. When in stand-by condition the power transformer (T-1) shown on wiring diagram 116396-2 is not energized, however the junction power transformer (T-2) is on at this time providing partial heater current to the tubes. When a selection is made transformer (T-1) becomes energized through the contact closing on the over-ride relay quickly bringing the amplifier tubes to normal temperature for playing as soon as a record is in play position.

c. STEREO SOUND SYSTEM

The stereo dual channel amplifier (Fig. 95) operates in conjunction with the Sonotone stereo pick-up, therefore it will be noted by referring to the block diagram (Fig. 98) that the radio frequency oscillator employed with the 536 amplifier is not used. The audio signal from both circuits of the Stereo Cartridge is fed directly to the grids of the 7025 tubes of Channel A and Channel B.

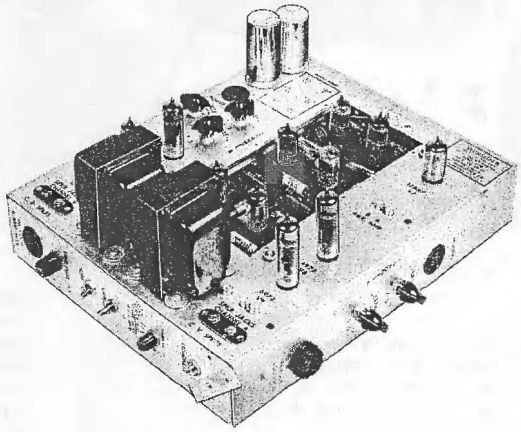

Fig. 95. MODEL 538 STEREO AMPLIFIER, LESS TUBES 116181

(1) THEORY OF OPERATION

(a) The signal is amplified in the first section of the 7025 tubes after which a portion is taken from channel A and fed to the voltage amplifier section of the 12AX7 tube. The second section of the 12AX7 rectifies this audio signal resulting in a varying D.C. voltage which is applied to the time constant circuit at the grids of the variable resistance section of both 12AU7 tubes. Thus the signal from channel A is used to control the level of both channel A and B. After passing through the cathode follower section of the 7025 tubes the loudness control governs the output of the amplifier. The tone controls on both channels are wired between the voltage amplifier section of the 12AU7 tubes and the 12AX7 phase inverters.

(b) The balance control, common to both channels, is wired between the input grids of the 12AX7 phase inverters and serves to equalize the output level between channel A and B. It should be adjusted, after auxiliary speakers have been connected, by listening to a monophonic record. Good stereo reproduction requires that the channels be balanced.

(c) The 12AX7 phase inverters drive two 6973 output tubes in a push pull circuit providing 18 watts of power at each channel. A variable feed-back circuit is employed, as on the 536 amplifier, for maximum output with minimum distortion under varying speaker loads.

(d) The mute and play switch is the same as used on the 536 amplifier and is wired to mute both channels. Wiring diagram 116396-1 shows the connections for this switch.

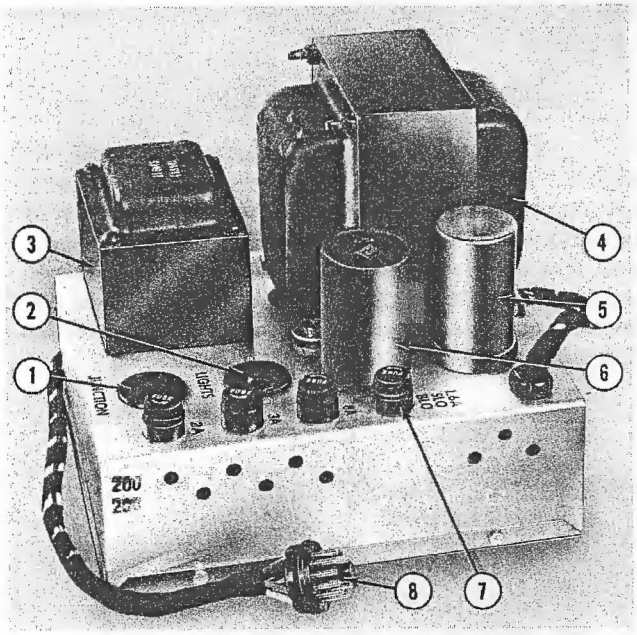

Fig. 96. POWER SUPPLY, STEREO, TOP SIDE

1. Socket, 11 Pin	38492
2. Socket	13037
3. Transformer, Amplifier Power	116645
4. Transformer, Low Voltage	116644
5. Capacitor, 20 Mfd., 250 W.V.	71594
6. Capacitor, 100 Mfd., 250 W.V.	71595
7. Fuse Post (4)	51485
8. Plug, 12 Pin	114324
Fuses used	
1.6A Slow Blow	71591-15
2.0A	71591-19
3.0A	71590-22
8.0A	71590-33

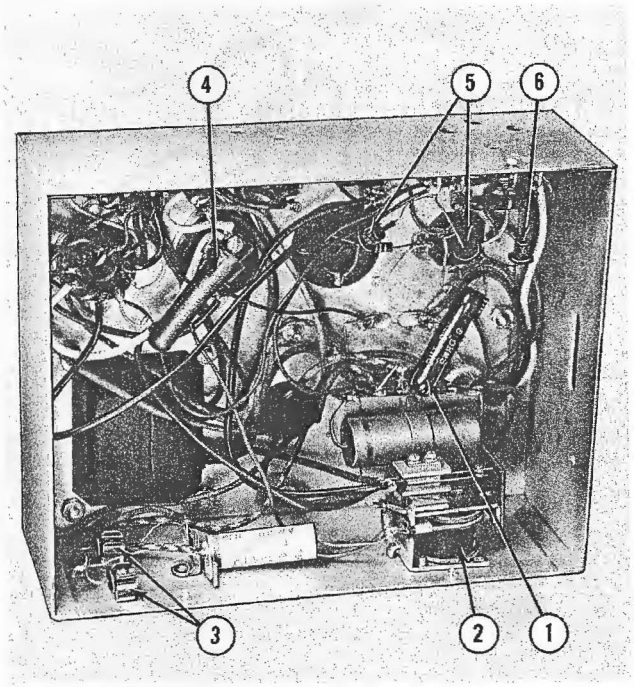

Fig. 97. POWER SUPPLY, STEREO, UNDER SIDE

1. Resistor, 8 Ohm, 10W.	73476-2
2. Relay, Over-ride	56321
3. Rectifier, Silicon Diode (2), Red	71588-3
4. Resistor, 1.5 Ohm, 10W.	73479-2
5. Rectifier, Silicon Diode (2), Green	71588-2
6. Rectifier, Silicon Diode, Brown	71588-1

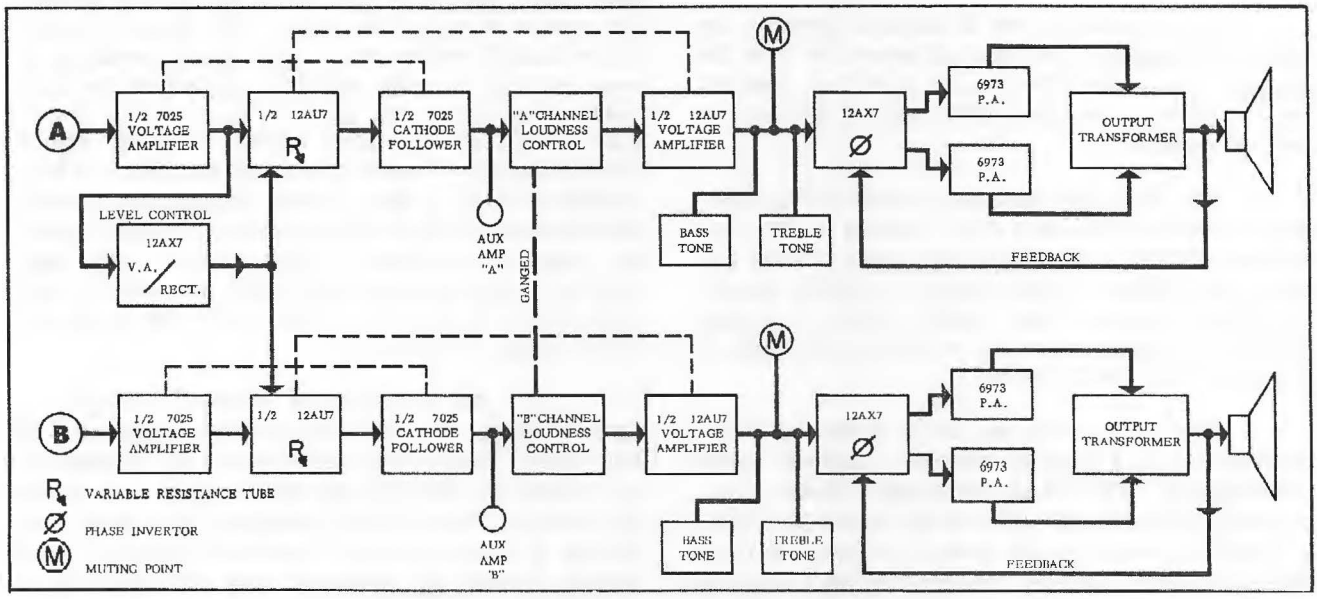

Fig. 98. MODEL 538 AMPLIFIER BLOCK DIAGRAM FOR SIGNAL TRACING

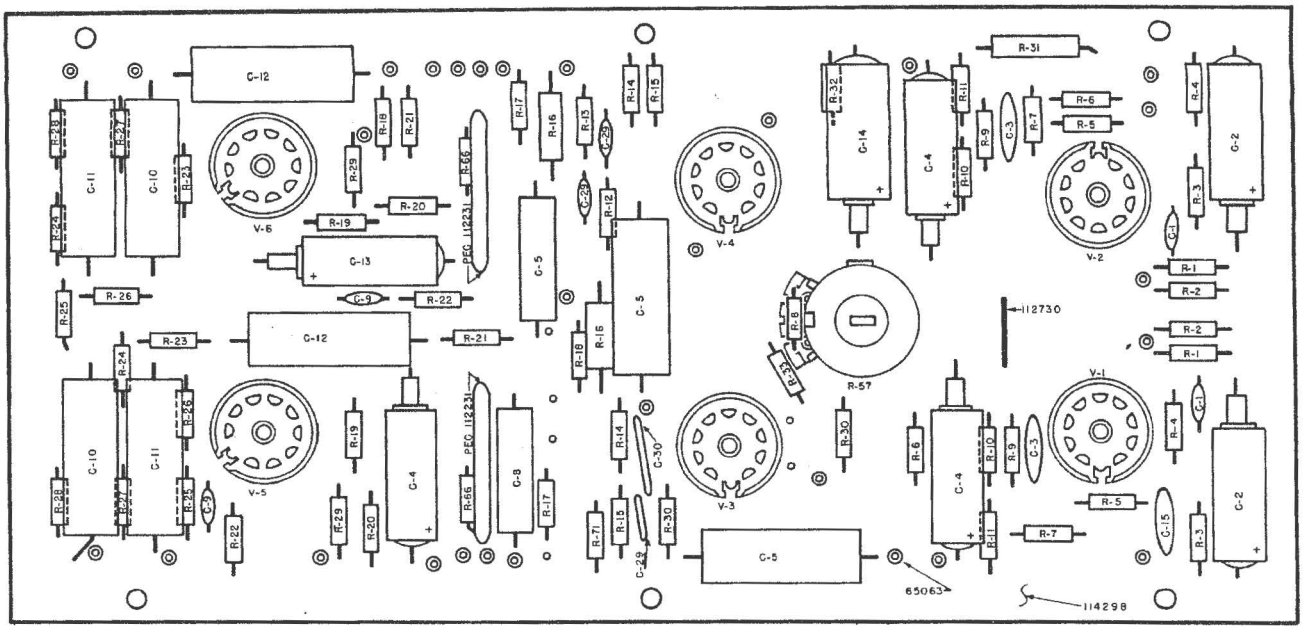

NOTE: For Code Values See Schematic Diagram 116479

Fig. 99 PRINTED CIRCUIT BOARD-MODEL 538 DUAL CHANNEL AMPLIFIER (TOP SIDE)

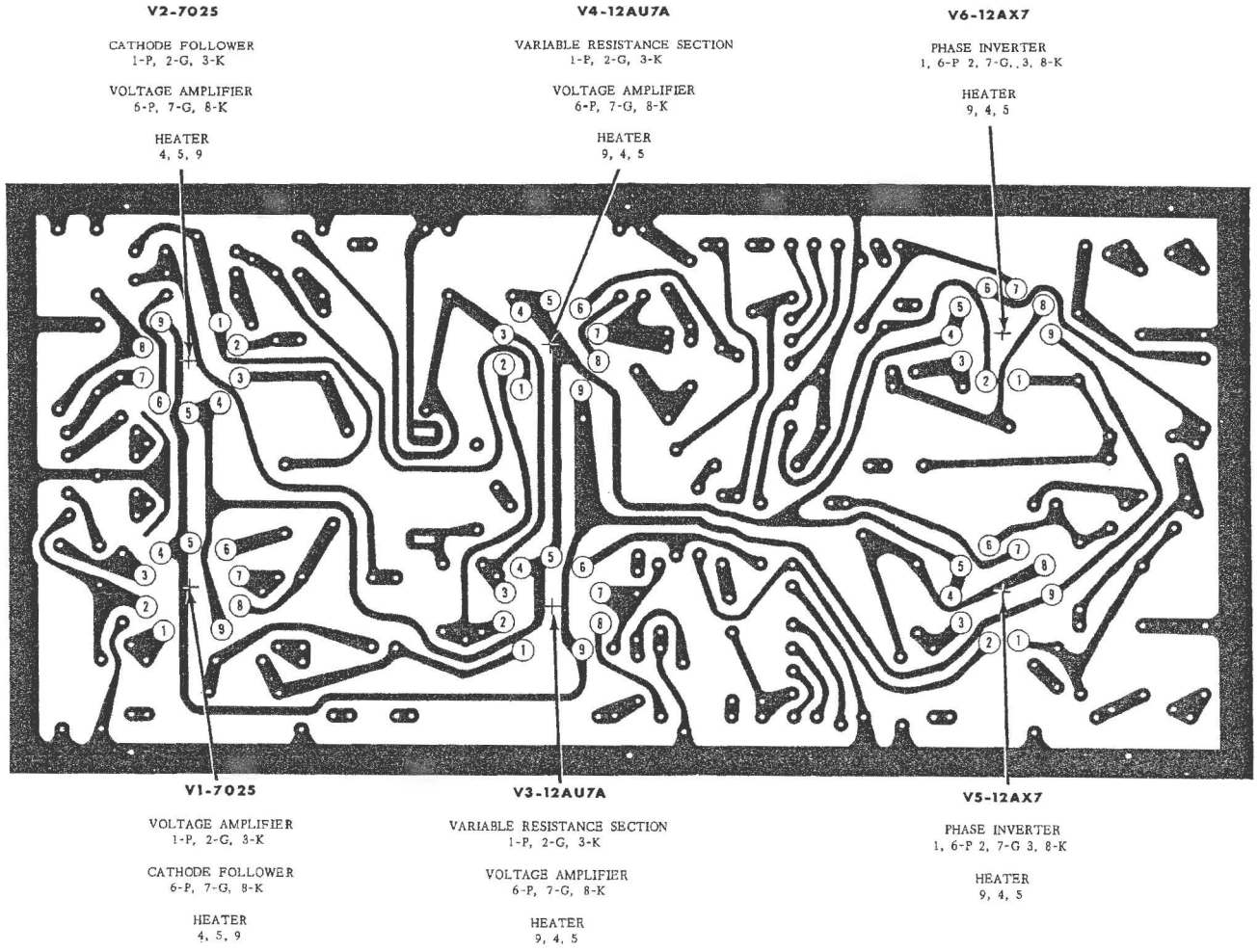

Fig. 100 PRINTED CIRCUIT BOARD-MODEL 538 DUAL CHANNEL AMPLIFIER (UNDER SIDE)

2. POWER SUPPLY

The stand-by heater circuit for the amplifier tubes is the same as on the 536 amplifier. The transformer (Fig. 96, Item 4) is the phonograph junction power and will be energized during the normal at rest position of the phonograph. Its filament winding in phase and in series with the filament winding on the amplifier power transformer (Item 3) provides partial current to the filaments. When a selection is made the transformer (Item 3) will be energized by the closing of the over-ride relay contacts quickly bringing the tubes to playing temperature by the time the record is in playing position. The transformer (Item 3) also supplies, in conjunction with the three Silicon Diode Rectifiers (Fig. 97, Items 5 and 6), the high voltage for the amplifier tubes.

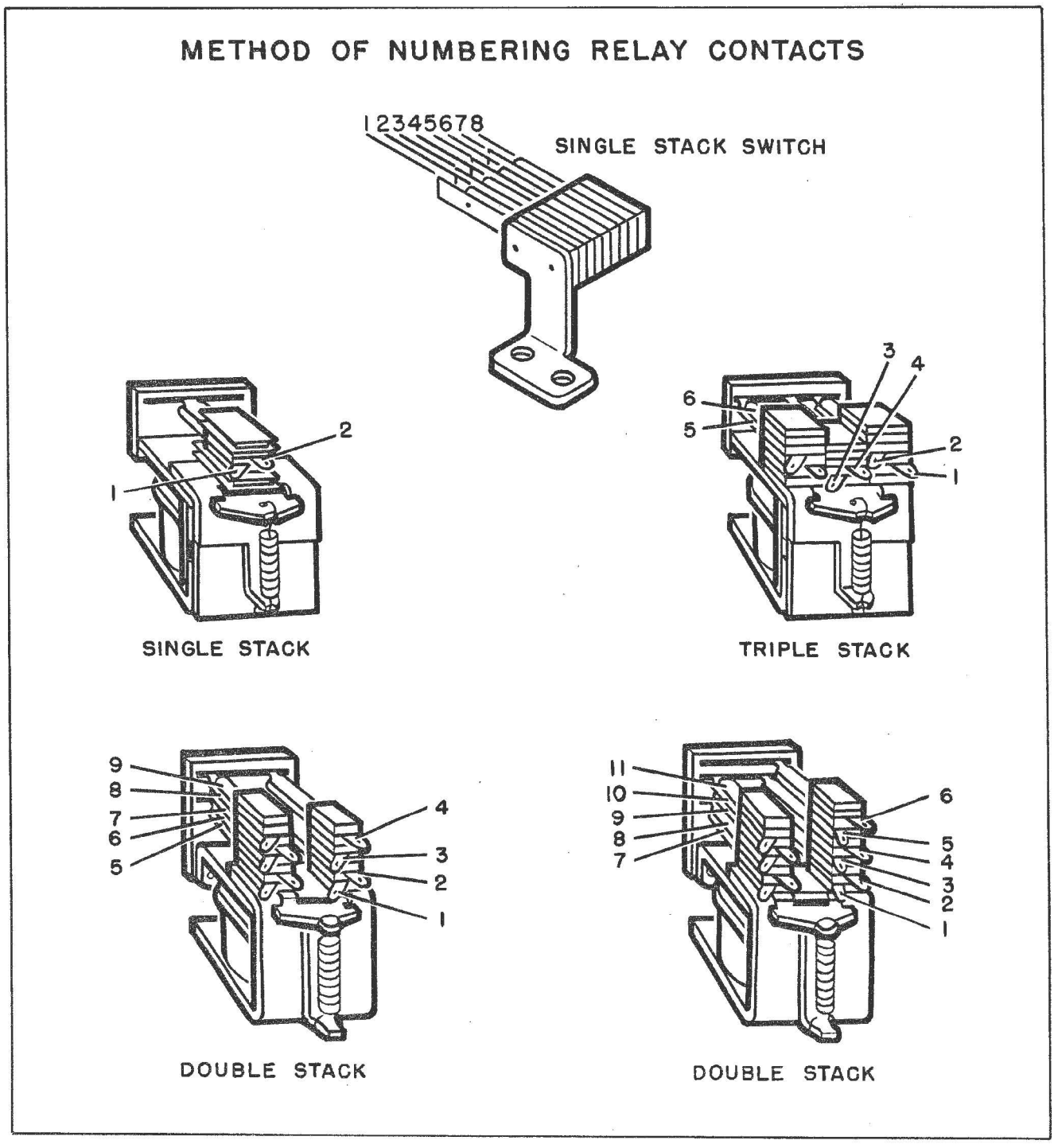

Fig. 101. METHOD OF NUMBERING RELAY CONTACTS

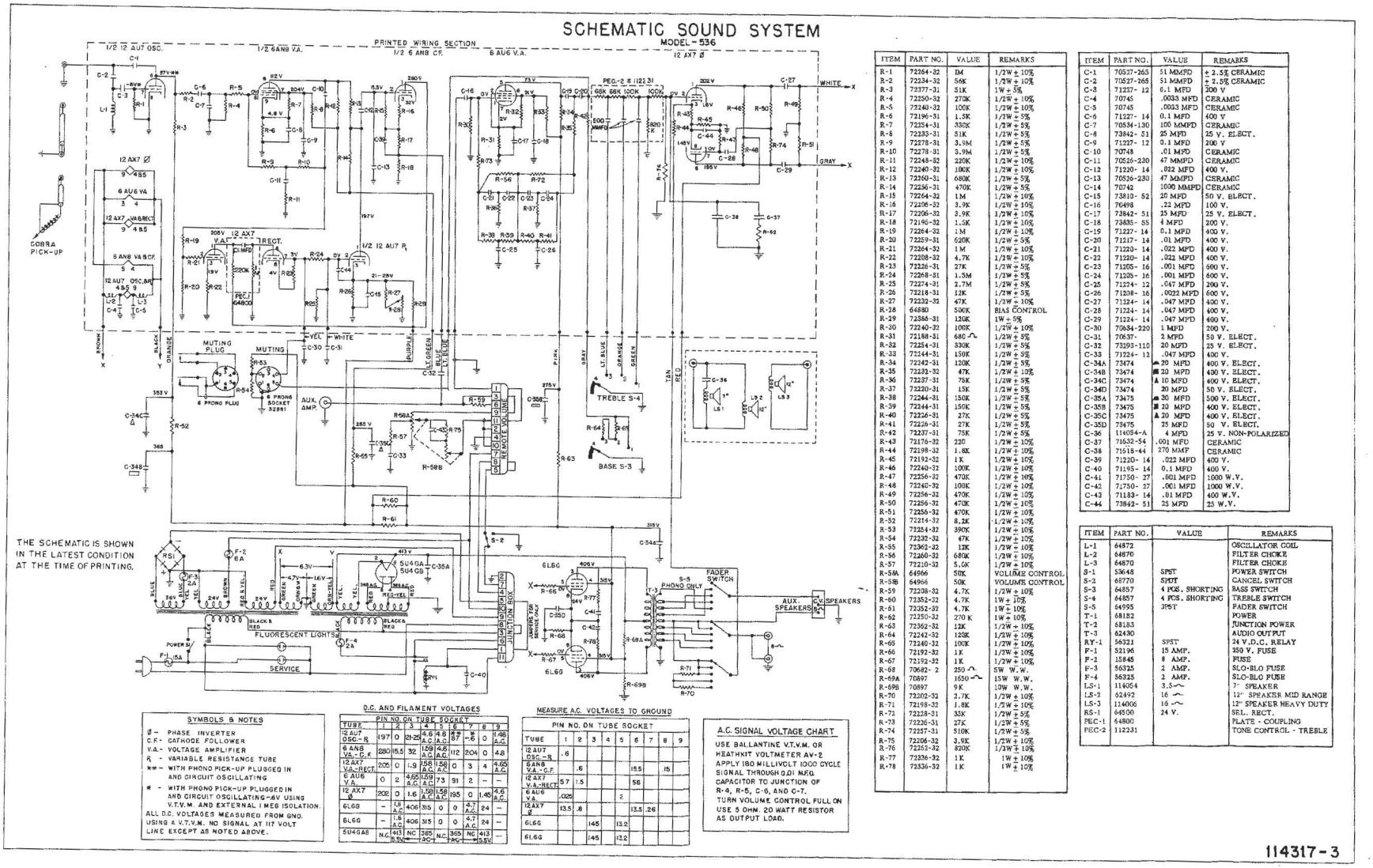

ITEM	PART NO.	VALUE	REMARKS
R-1	72264-32	1M	1/2W ± 10%
R-2	72234-32	56K	1/2W ± 10%
R-3	72377-31	51K	1W ± 5%
R-4	72250-32	270K	1/2W ± 10%
R-5	72240-32	100K	1/2W ± 10%
R-6	72196-31	1.5K	1/2W ± 5%
R-7	72254-31	330K	1/2W ± 5%
R-8	72233-31	51K	1/2W ± 5%
R-9	72278-31	3.9M	1/2W ± 5%
R-10	72278-31	3.9M	1/2W ± 5%
R-11	72248-32	220K	1/2W ± 10%
R-12	72240-32	100K	1/2W ± 10%
R-13	72260-31	680K	1/2W ± 5%
R-14	72256-31	470K	1/2W ± 5%
R-15	72264-32	1M	1/2W ± 10%
R-16	72206-32	3.9K	1/2W ± 10%
R-17	72206-32	3.9K	1/2W ± 10%
R-18	72196-32	1.5K	1/2W ± 10%
R-19	72264-32	1M	1/2W ± 10%
R-20	72259-31	620K	1/2W ± 5%
R-21	72264-32	1M	1/2W ± 10%
R-22	72208-32	4.7K	1/2W ± 10%
R-23	72226-31	27K	1/2W ± 5%
R-24	72268-31	1.5M	1/2W ± 5%
R-25	72274-31	2.7M	1/2W ± 5%
R-26	72218-31	12K	1/2W ± 5%
R-27	72232-32	47K	1/2W ± 10%
R-28	64880	500K	BIAS CONTROL
R-29	72366-31	120K	1W ± 5%
R-30	72240-32	100K	1/2W ± 10%
R-31	72188-31	680 Ω	1/2W ± 5%
R-32	72254-31	330K	1/2W ± 5%
R-33	72244-31	150K	1/2W ± 5%
R-34	72242-31	120K	1/2W ± 5%
R-35	72232-32	47K	1/2W ± 10%
R-36	72237-31	75K	1/2W ± 5%
R-37	72220-31	15K	1/2W ± 5%
R-38	72244-31	150K	1/2W ± 5%
R-39	72244-31	150K	1/2W ± 5%
R-40	72226-31	27K	1/2W ± 5%
R-41	72226-31	27K	1/2W ± 5%
R-42	72237-31	75K	1/2W ± 5%
R-43	72176-32	220	1/2W ± 10%
R-44	72198-32	1.8K	1/2W ± 10%
R-45	72192-32	1K	1/2W ± 10%
R-46	72240-32	100K	1/2W ± 10%
R-47	72256-32	470K	1/2W ± 10%
R-48	72240-32	100K	1/2W ± 10%
R-49	72256-32	470K	1/2W ± 10%
R-50	72256-32	470K	1/2W ± 10%
R-51	72256-32	470K	1/2W ± 10%
R-52	72214-32	8.2K	1/2W ± 10%
R-53	72254-32	390K	1/2W ± 10%
R-54	72232-32	47K	1/2W ± 10%
R-55	72362-32	12K	1/2W ± 10%
R-56	72260-32	680K	1/2W ± 10%
R-57	72210-32	5.6K	1/2W ± 10%
R-58A	64966	50K	VOLUME CONTROL
R-58B	64966	50K	VOLUME CONTROL
R-59	72208-32	4.7K	1/2W ± 10%
R-60	72352-32	4.7K	1W ± 10%
R-61	72352-32	4.7K	1W ± 10%
R-62	72250-32	270 K	1W ± 10%
R-63	72362-32	12K	1/2W ± 10%
R-64	72242-32	120K	1/2W ± 10%
R-65	72240-32	100K	1/2W ± 10%
R-66	72192-32	1K	1/2W ± 10%
R-67	72192-32	1K	1/2W ± 10%
R-68	70682- 2	250 Ω	5W W.W.
R-69A	70897	1650 Ω	15W W.W.
R-69B	70897	9K	10W W.W.
R-70	72202-32	2.7K	1/2W ± 10%
R-71	72198-32	1.8K	1/2W ± 10%
R-72	72228-31	33K	1/2W ± 5%
R-73	72226-31	27K	1/2W ± 5%
R-74	72257-31	510K	1/2W ± 5%
R-75	72206-32	3.9K	1/2W ± 10%
R-76	72252-32	820K	1/2W ± 10%
R-77	72336-32	1K	1W ± 10%
R-78	72336-32	1K	1W ± 10%

ITEM	PART NO.	VALUE	REMARKS
C-1	70527-265	51 MMFD	± 2.5% CERAMIC
C-2	70527-265	51 MMFD	± 2.5% CERAMIC
C-3	71227- 12	0.1 MFD	200 V
C-4	70745	.0033 MFD	CERAMIC
C-5	70745	.0033 MFD	CERAMIC
C-6	71227- 14	0.1 MFD	400 V
C-7	70534-130	100 MMFD	CERAMIC
C-8	73842- 51	25 MFD	25 V. ELECT.
C-9	71227- 12	0.1 MFD	200 V
C-10	70748	.01 MFD	CERAMIC
C-11	70526-220	47 MMFD	CERAMIC
C-12	71220- 14	.022 MFD	400 V.
C-13	70526-230	47 MMFD	CERAMIC
C-14	70742	1000 MMFD	CERAMIC
C-15	73810- 52	20 MFD	50 V. ELECT.
C-16	70498	.22 MFD	100 V.
C-17	73842- 51	25 MFD	25 V. ELECT.
C-18	73835- 55	4 MFD	200 V.
C-19	71227- 14	0.1 MFD	400 V.
C-20	71217- 14	.01 MFD	400 V.
C-21	71220- 14	.022 MFD	400 V.
C-22	71220- 14	.022 MFD	400 V.
C-23	71205- 16	.001 MFD	600 V.
C-24	71205- 16	.001 MFD	600 V.
C-25	71224- 12	.047 MFD	200 V.
C-26	71218- 16	.0022 MFD	600 V.
C-27	71224- 14	.047 MFD	400 V.
C-28	71224- 14	.047 MFD	400 V.
C-29	71224- 14	.047 MFD	400 V.
C-30	70634-220	1 MFD	200 V.
C-31	70637-	2 MFD	50 V. ELECT.
C-32	73193-110	20 MFD	25 V. ELECT.
C-33	71224- 12	.047 MFD	400 V.
C-34A	73474	▲ 20 MFD	400 V. ELECT.
C-34B	73474	■ 20 MFD	400 V. ELECT.
C-34C	73474	▲ 10 MFD	400 V. ELECT.
C-34D	73474	20 MFD	50 V. ELECT.
C-35A	73475	▲ 30 MFD	500 V. ELECT.
C-35B	73475	■ 20 MFD	400 V. ELECT.
C-35C	73475	▲ 20 MFD	400 V. ELECT.
C-35D	73475	25 MFD	50 V. ELECT.
C-36	114054-A	4 MFD	25 V. NON-POLARIZED
C-37	71632-54	.001 MFD	CERAMIC
C-38	71518-44	270 MMF	CERAMIC
C-39	71220- 14	.022 MFD	400 V.
C-40	71195- 14	0.1 MFD	400 V.
C-41	71750- 27	.001 MFD	1000 W.V.
C-42	71750- 27	.001 MFD	1000 W.V.
C-43	71183- 14	.01 MFD	400 W.V.
C-44	73842- 51	25 MFD	25 W.V.

ITEM	PART NO.	VALUE	REMARKS
L-1	64872		OSCILLATOR COIL
L-2	64870		FILTER CHOKE
L-3	64870		FILTER CHOKE
S-1	53648	SPST	POWER SWITCH
S-2	68770	SPDT	CANCEL SWITCH
S-3	64857	4 POS. SHORTING	BASS SWITCH
S-4	64857	4 POS. SHORTING	TREBLE SWITCH
S-5	64995	3PST	FADER SWITCH
T-1	68182		POWER
T-2	68183		JUNCTION POWER
T-3	62430		AUDIO OUTPUT
RY-1	56321	SPST	24 V.D.C. RELAY
F-1	52196	15 AMP.	250 V. FUSE
F-2	15845	8 AMP.	FUSE
F-3	56325	2 AMP.	SLO-BLO FUSE
F-4	56325	2 AMP.	SLO-BLO FUSE
LS-1	114054	3.5 ~	7" SPEAKER
LS-2	62492	16 ~	12" SPEAKER MID RANGE
LS-3	114006	16 ~	12" SPEAKER HEAVY DUTY
RS-1	64500	24 V.	SEL. RECT.
PEC-1	64800		PLATE - COUPLING
PEC-2	112231		TONE CONTROL - TREBLE

SYMBOLS & NOTES

Ø - PHASE INVERTER
C.F. - CATHODE FOLLOWER
V.A. - VOLTAGE AMPLIFIER
R - VARIABLE RESISTANCE TUBE
** - WITH PHONO PICK-UP PLUGGED IN AND CIRCUIT OSCILLATING
* - WITH PHONO PICK-UP PLUGGED IN AND CIRCUIT OSCILLATING -6V USING V.T.V.M. AND EXTERNAL 1 MEG ISOLATION.
ALL D.C. VOLTAGES MEASURED FROM GND. USING A V.T.V.M. NO SIGNAL AT 117 VOLT LINE EXCEPT AS NOTED ABOVE.

D.C. AND FILAMENT VOLTAGES

TUBE	PIN NO. ON TUBE SOCKET 1	2	3	4	5	6	7	8	9
12 AU7 OSC.-R	197	0	21-25	4.6 A.C.	4.6 A.C.	87	-6	0	1.46 A.C.
6 AN8 VA.-C.F.	280	15.5	32	1.59 A.C.	4.6 A.C.	112	204	0	4.8
12 AX7 VA.-RECT.	205	0	1.9	1.58 A.C.	1.58 A.C.	0	3	4	4.60 A.C.
6 AU6 V.A.	0	2	4.65 A.C.	1.59 A.C.	73	91	2	--	--
12 AX7 Ø	202	0	1.6	1.59 A.C.	1.58 A.C.	195	0	1.46	4.6 A.C.
6LG6	--	1.8 A.C.	406	315	0	0	4.7 A.C.	24	--
6LG6	--	1.6 A.C.	406	315	0	0	4.7 A.C.	24	--
5U4GA8	N.C.	413 ±5V	NC	365 AC	N.C.	365 AC	NC	413 ±5V	--

MEASURE A.C. VOLTAGES TO GROUND

TUBE	PIN NO. ON TUBE SOCKET 1	2	3	4	5	6	7	8	9
12 AU7 OSC.-R	.6								
6AN8 VA.-C.F.		.6				15.5		15	
12 AX7 V.A.-RECT.	5.7	1.5				56			
6 AU6 V.A.	.025				2				
12AX7 Ø	13.5	.6				13.5	.26		
6LG6			145		13.2				
6LG6			145		13.2				

A.C. SIGNAL VOLTAGE CHART

USE BALLANTINE V.T.V.M. OR HEATHKIT VOLTMETER AV-2 APPLY 180 MILLIVOLT 1000 CYCLE SIGNAL THROUGH 0.01 MFD. CAPACITOR TO JUNCTION OF R-4, R-5, C-6, AND C-7. TURN VOLUME CONTROL FULL ON USE 5 OHM. 20 WATT RESISTOR AS OUTPUT LOAD.

114317-3

Fig. 102. 536 SOUND SYSTEM . . . . . SCHEMATIC WIRING DIAGRAM

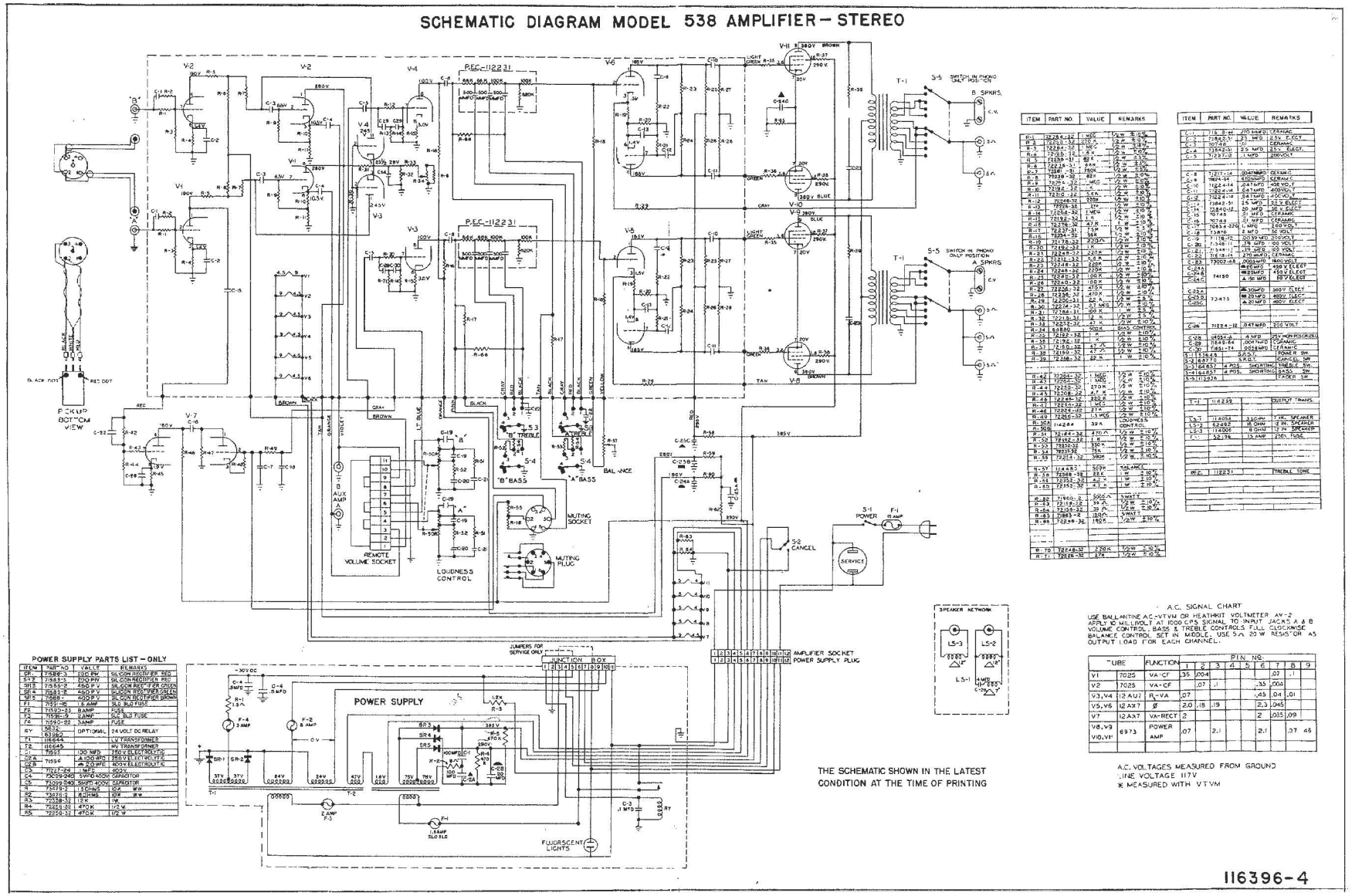

Fig. 103. 538 SOUND SYSTEM . . . . . SCHEMATIC WIRING DIAGRAM

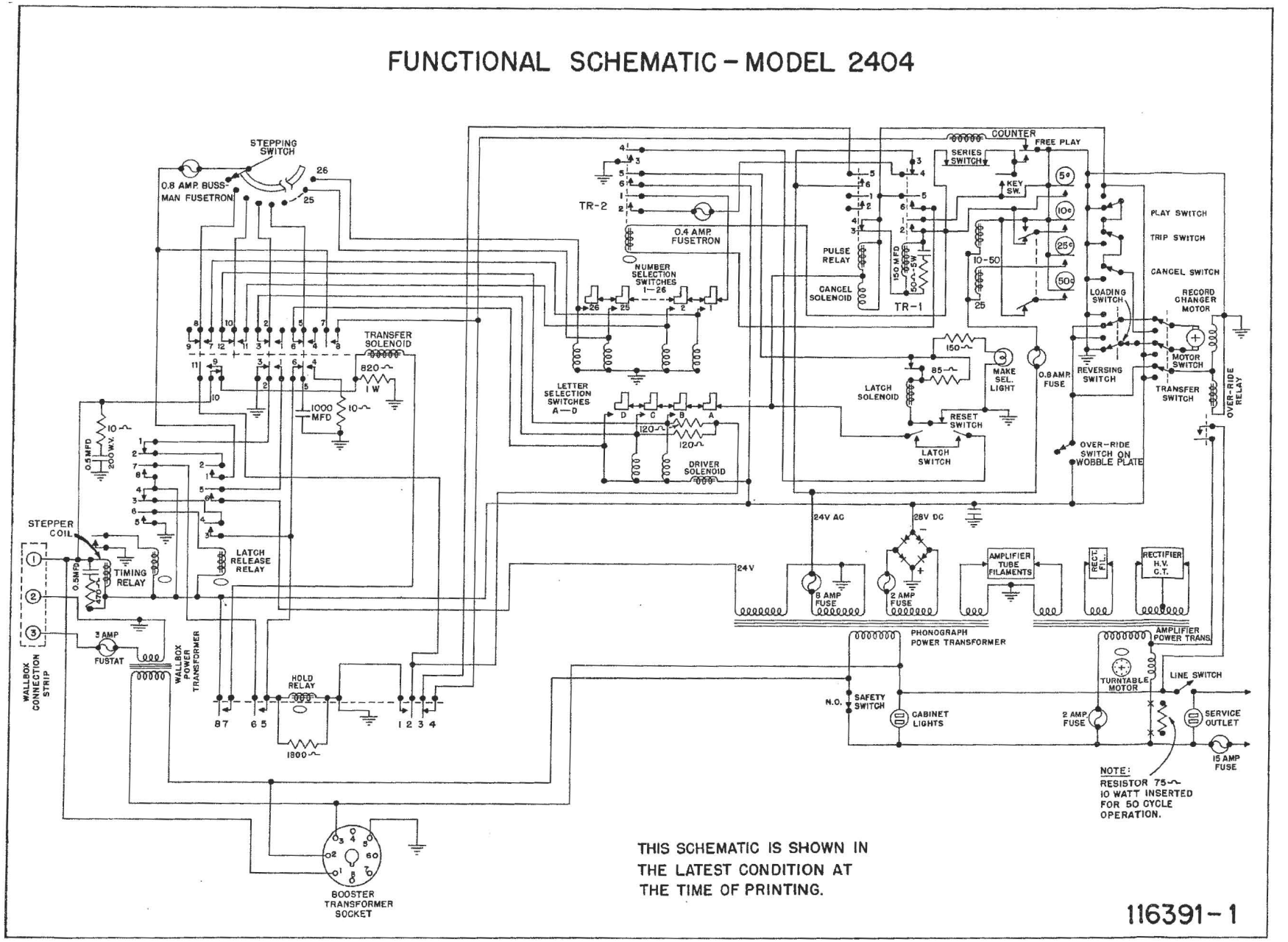

Fig. 104. MODEL 2404 . . . . . FUNCTIONAL SCHEMATIC

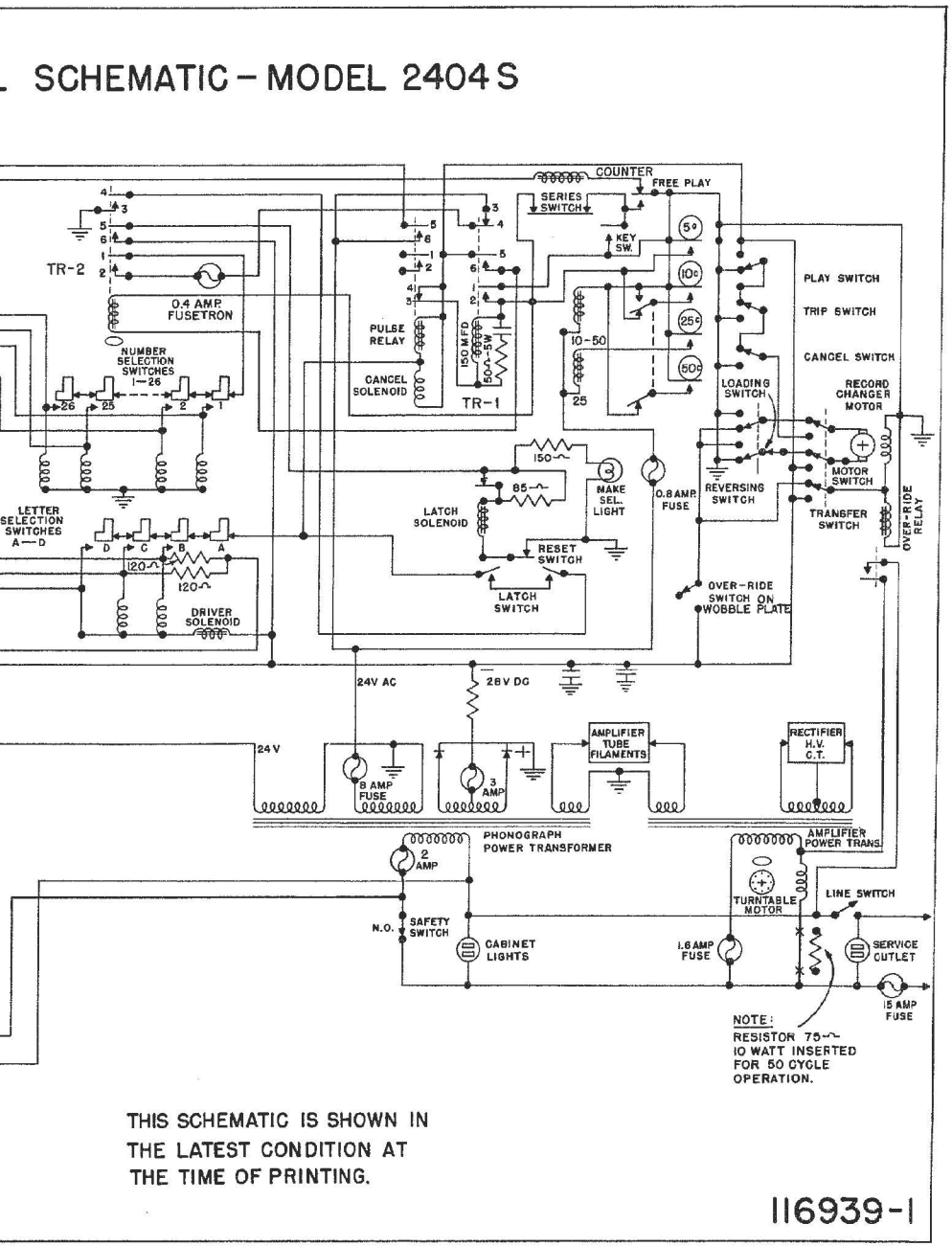

Fig. 105. MODEL 2404S . . . . . FUNCTIONAL SCHEMATIC

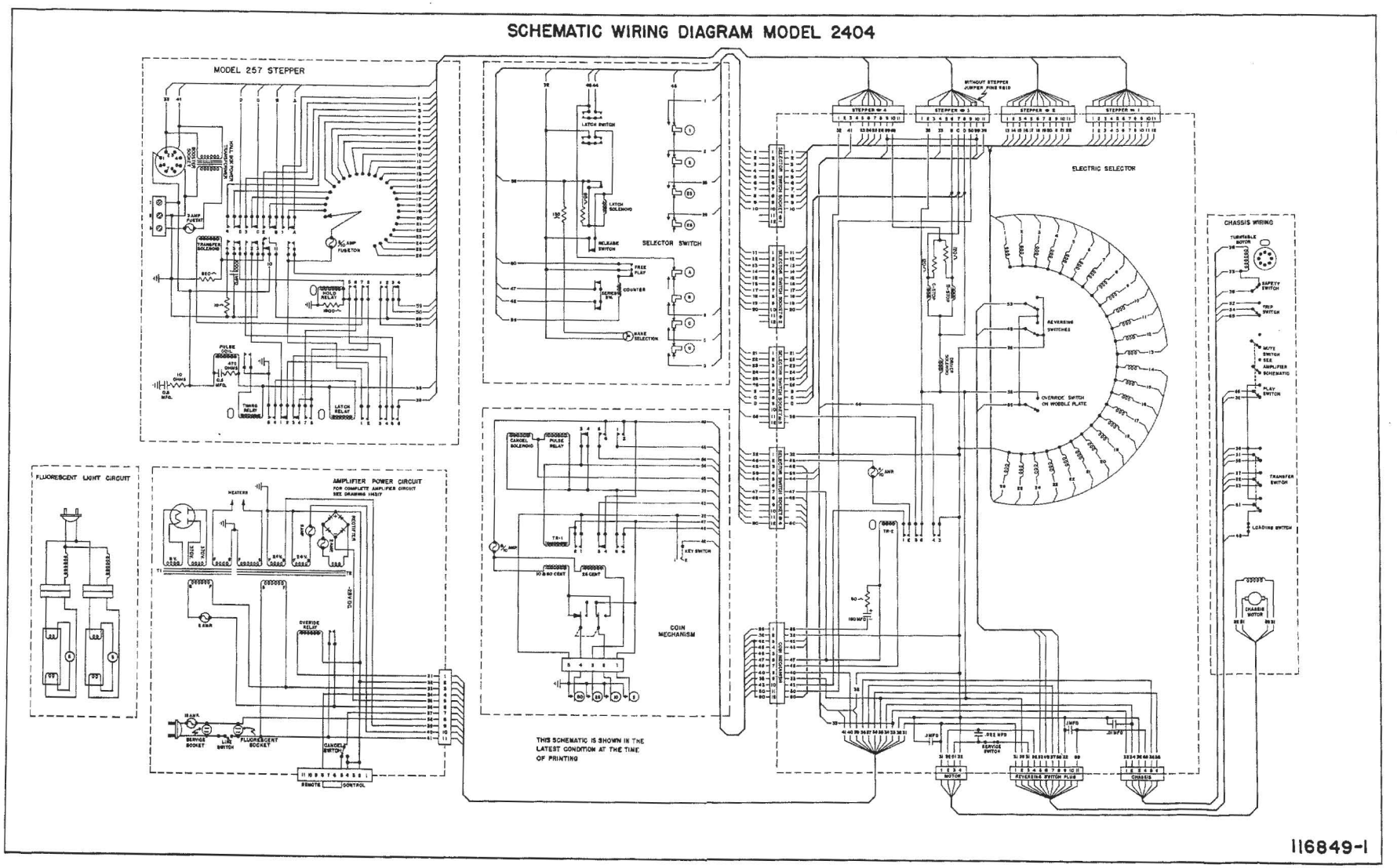

Fig. 106. MODEL 2404 . . . . . WIRING DIAGRAM

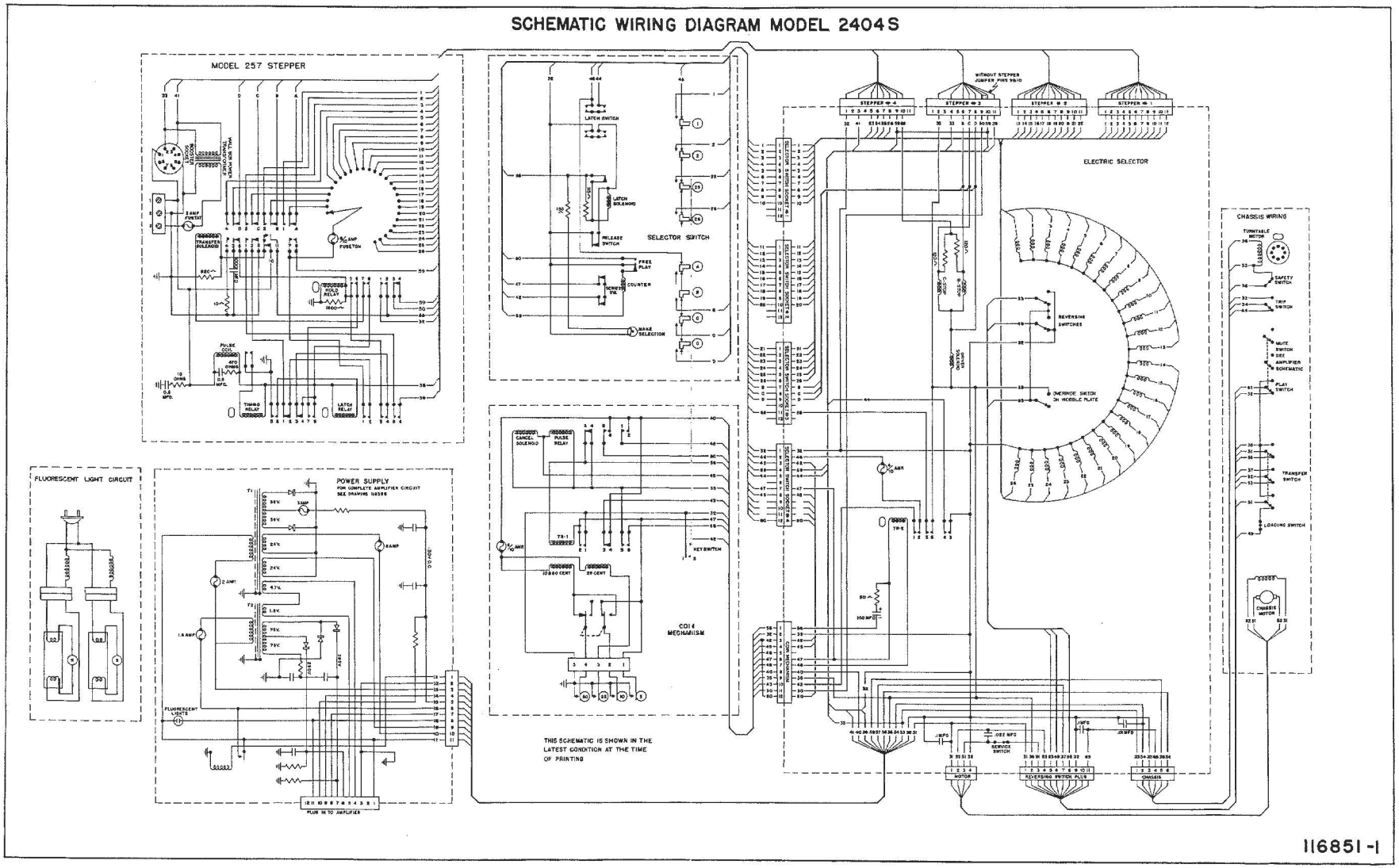

Fig. 107. MODEL 2404S . . . . . WIRING DIAGRAM

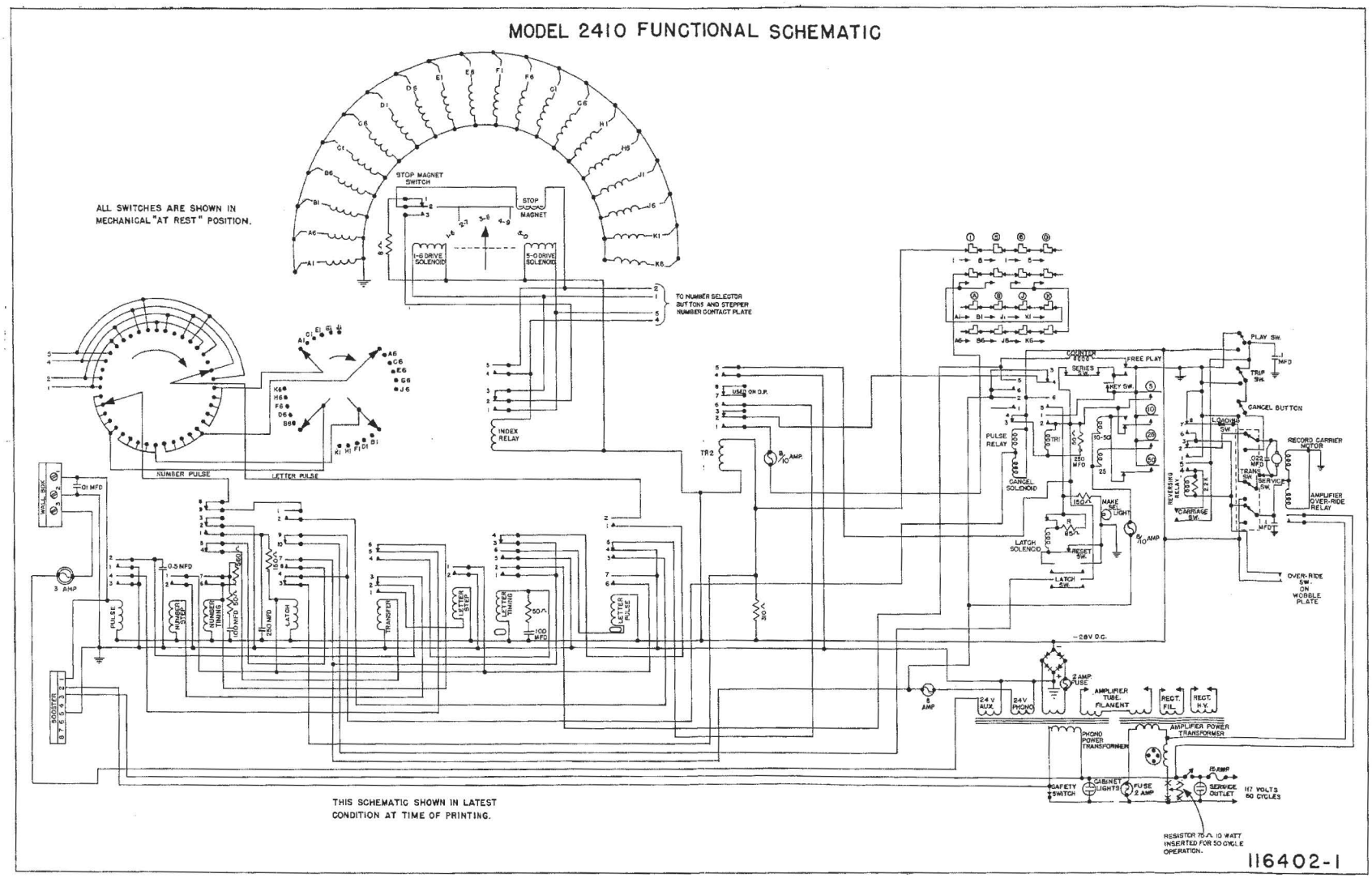

Fig. 108. MODEL 2410 . . . . . FUNCTIONAL SCHEMATIC

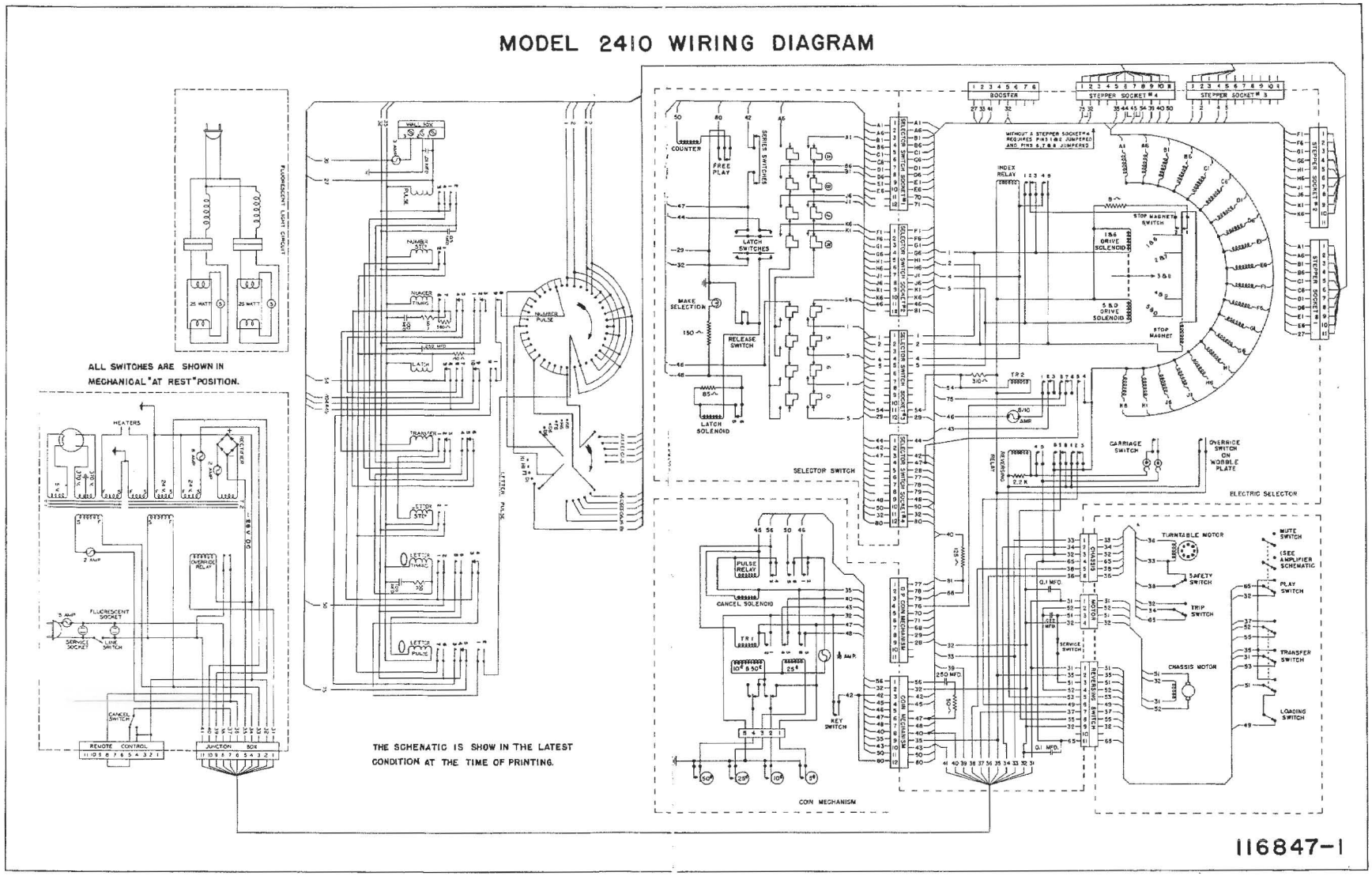

Fig. 109. MODEL 2410 . . . . . WIRING DIAGRAM

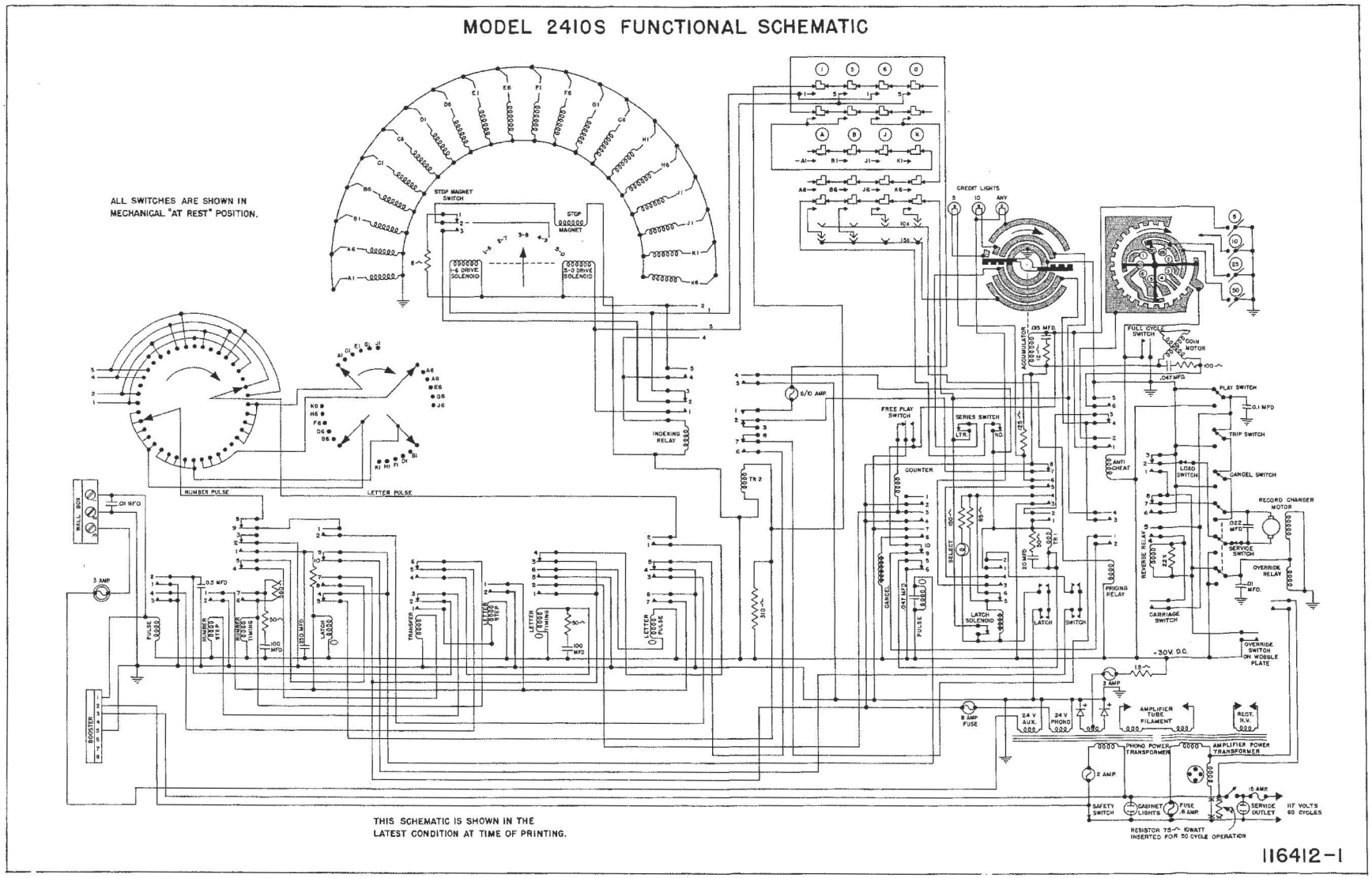

Fig. 110. MODEL 2410S . . . . . FUNCTIONAL SCHEMATIC

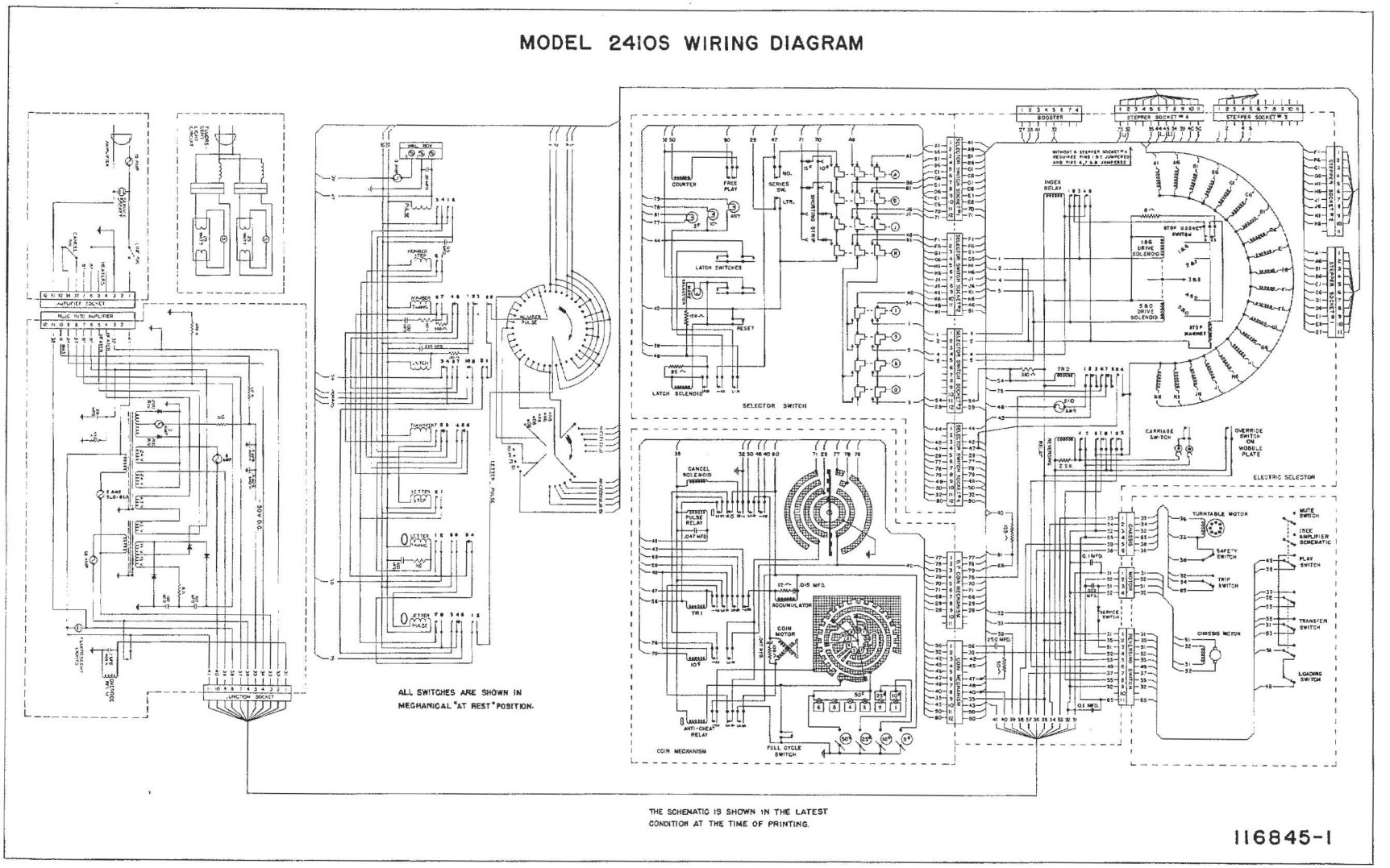

Fig. 111. MODEL 2410S . . . . . WIRING DIAGRAM

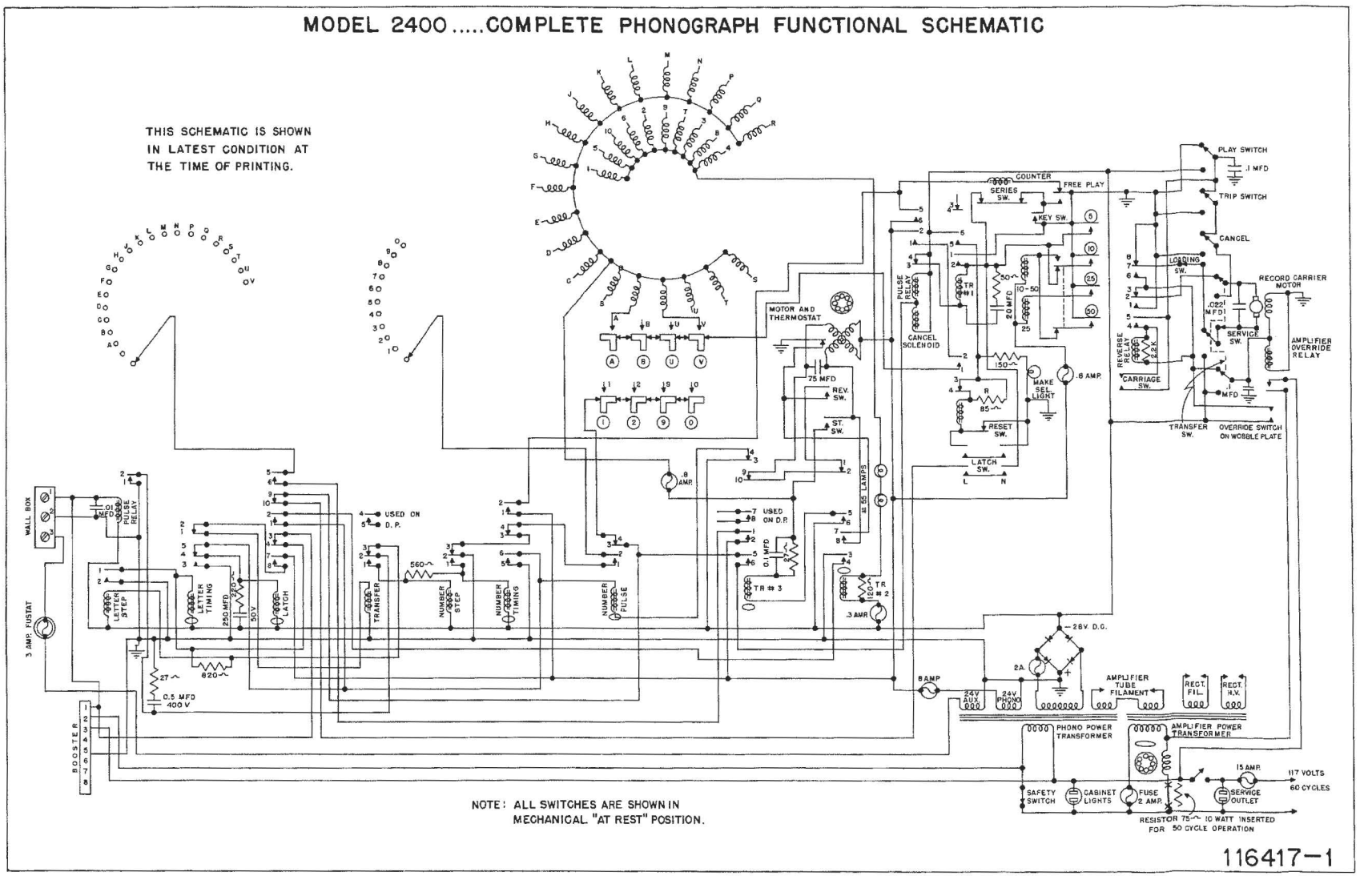

Fig. 112. MODEL 2400 . . . . . FUNCTIONAL SCHEMATIC

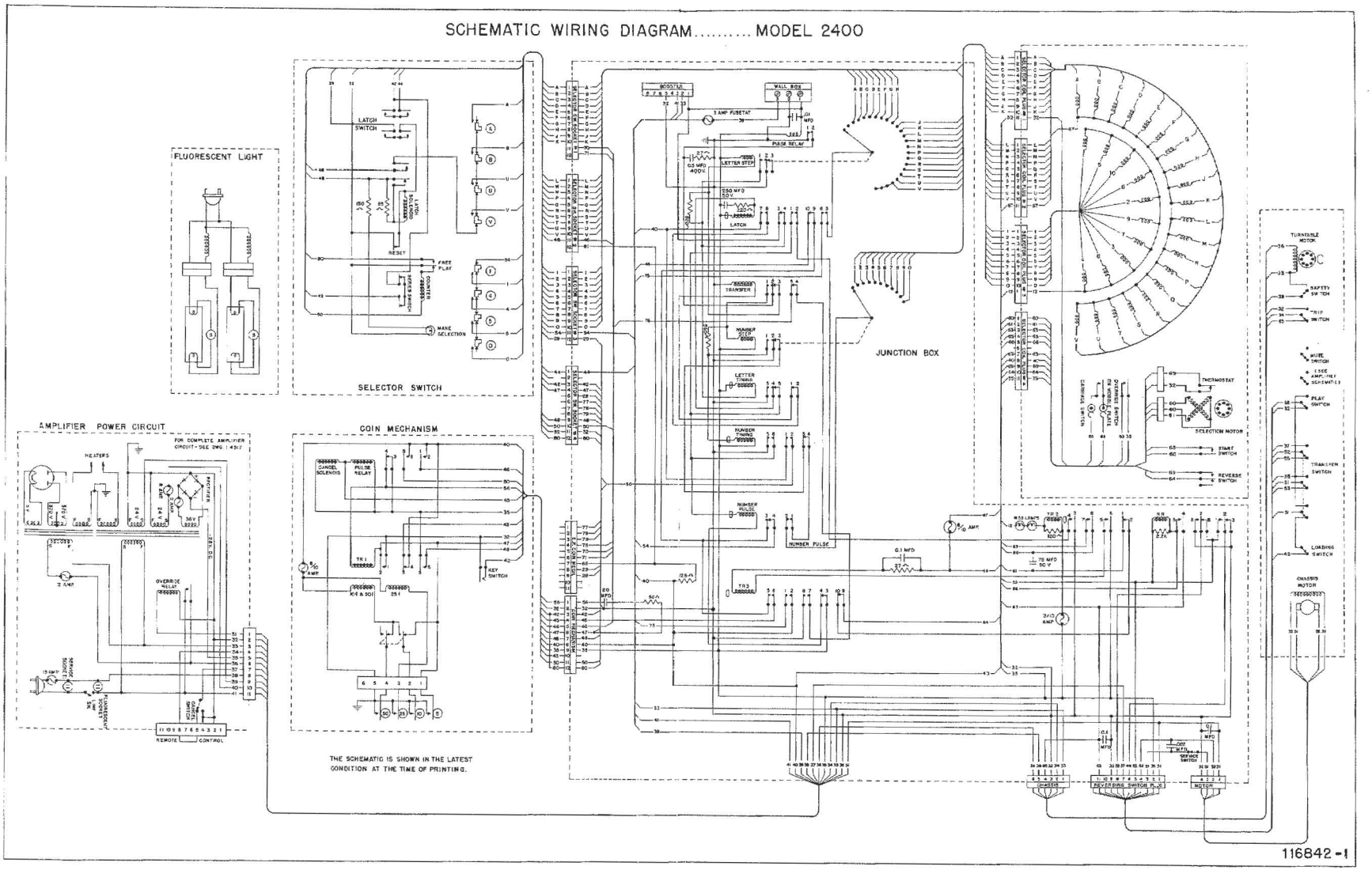

Fig. 113. MODEL 2400 . . . . . WIRING DIAGRAM

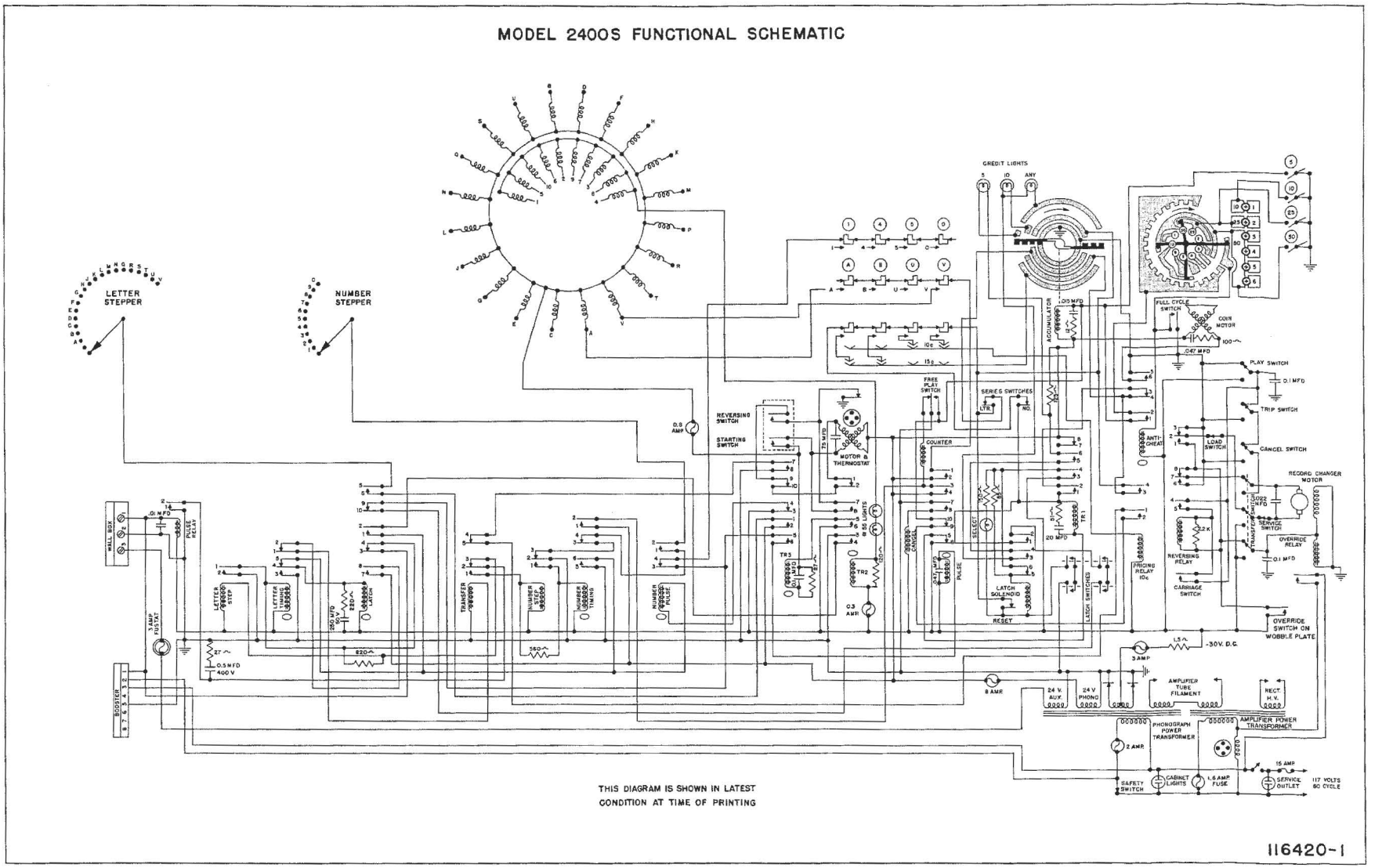

Fig. 114. MODEL 2400S . . . . . FUNCTIONAL SCHEMATIC

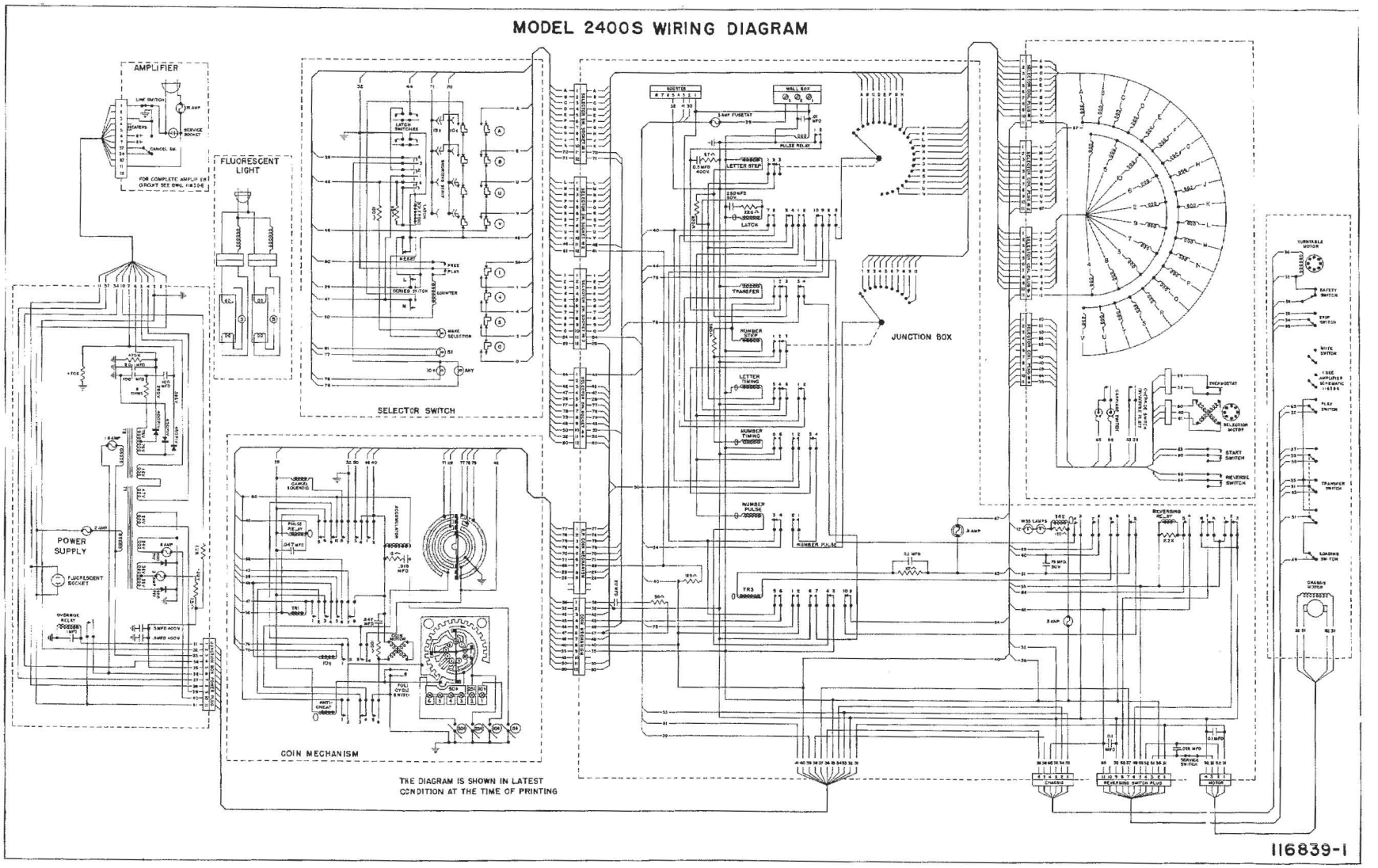

Fig. 115. MODEL 2400S . . . . . WIRING DIAGRAM

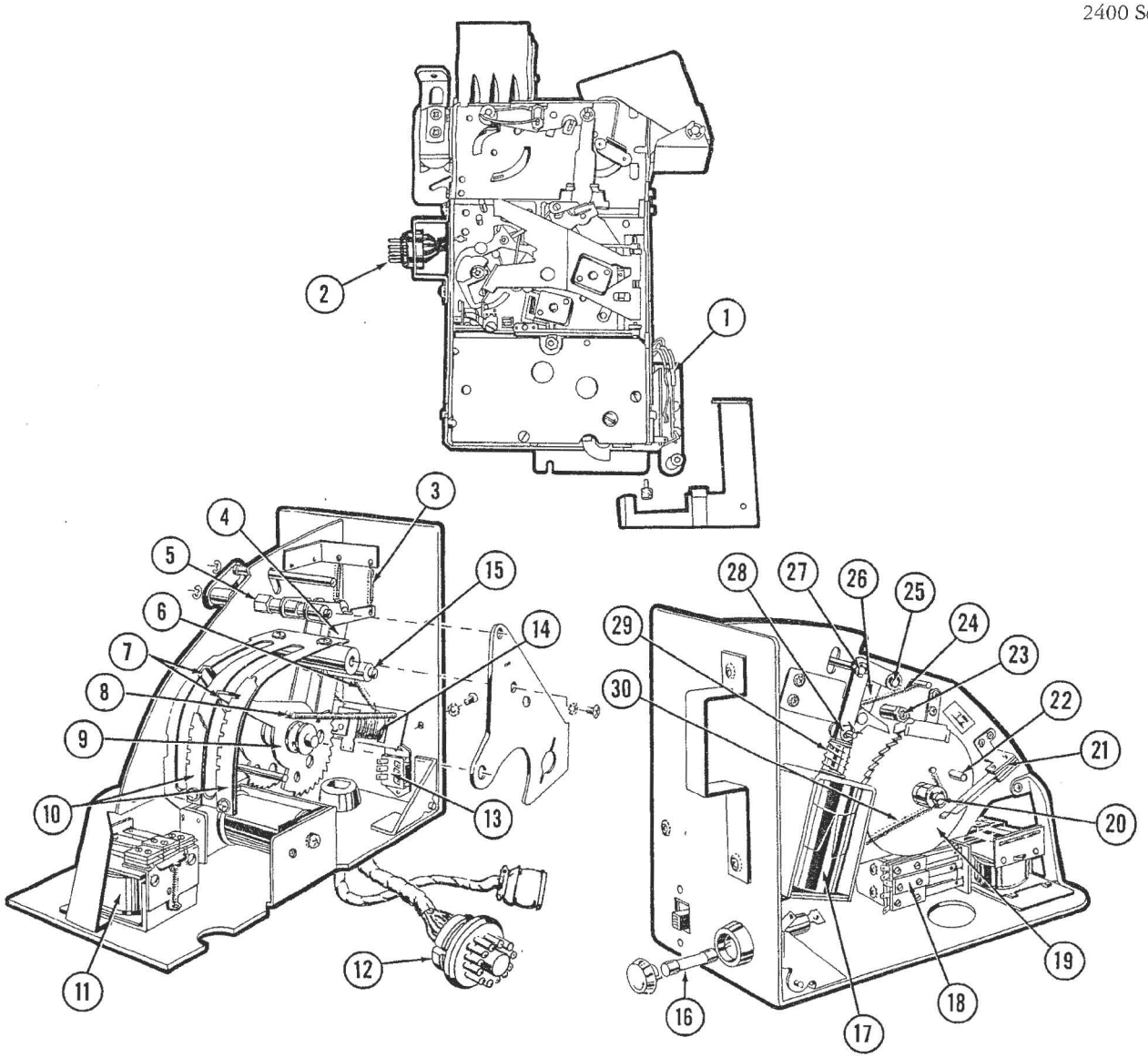

Fig. 116. PLAYRAK AND SLUG REJECTOR

1. Coin Switch Assembly, Slug Rejector	68311	15. Retaining Ring	73724-18
2. Plug, 5 Prong	13087	16. Fuse Post	51485
3. Spring, Lockout Lever	62145	Fusetron, 0.8 Amp. Slo Blow	71591-10
4. Lever, Hub and Stud Assembly,		17. Solenoid, Cancel	65069
Magnet Armature	66129	18. Relay, Timing, #1	112494
5. Mounting Stud, Lockout Levers	66049	19. Cancel Wheel, Assembly	66124
6. Spring, Armature Return (2)	58781	20. Retaining Ring	73724-25
7. Stop Lever and Spring Assembly	66132	21. Switch Assembly, Key Switch	66082
8. Spring, Accumulator Wheel (2)	66074	22. Actuator, Key Switch	58255
9. Accumulator Wheel and Hub Assembly (2)	66131	23. Adjusting Cam	42868
10. Indexing Strip and Silk Screen		24. Spring, Cancel Pawl	62145
Assembly, Quarter	66133	25. Pivot Pin, Pawl	63623
Indexing Strip and Silk Screen Assembly,		Retaining Ring	73724-21
Dime and Half Dollar	66135	26. Pivot Arm and Pawl Assembly	66125
11. Relay, Pulse	69244	27. Retaining Ring,	
12. Plug, 12 Prong	114324	Pivot Arm and Pawl Assembly	73724-15
Socket, 5 Prong	16617	28. Pin, Cancel Plunger	65947
13. Slide Switch	62886	29. Spring, Solenoid Plunger	66072
14. Coin Magnet and Bracket Assembly	66128	30. Spring, Cancel	66071

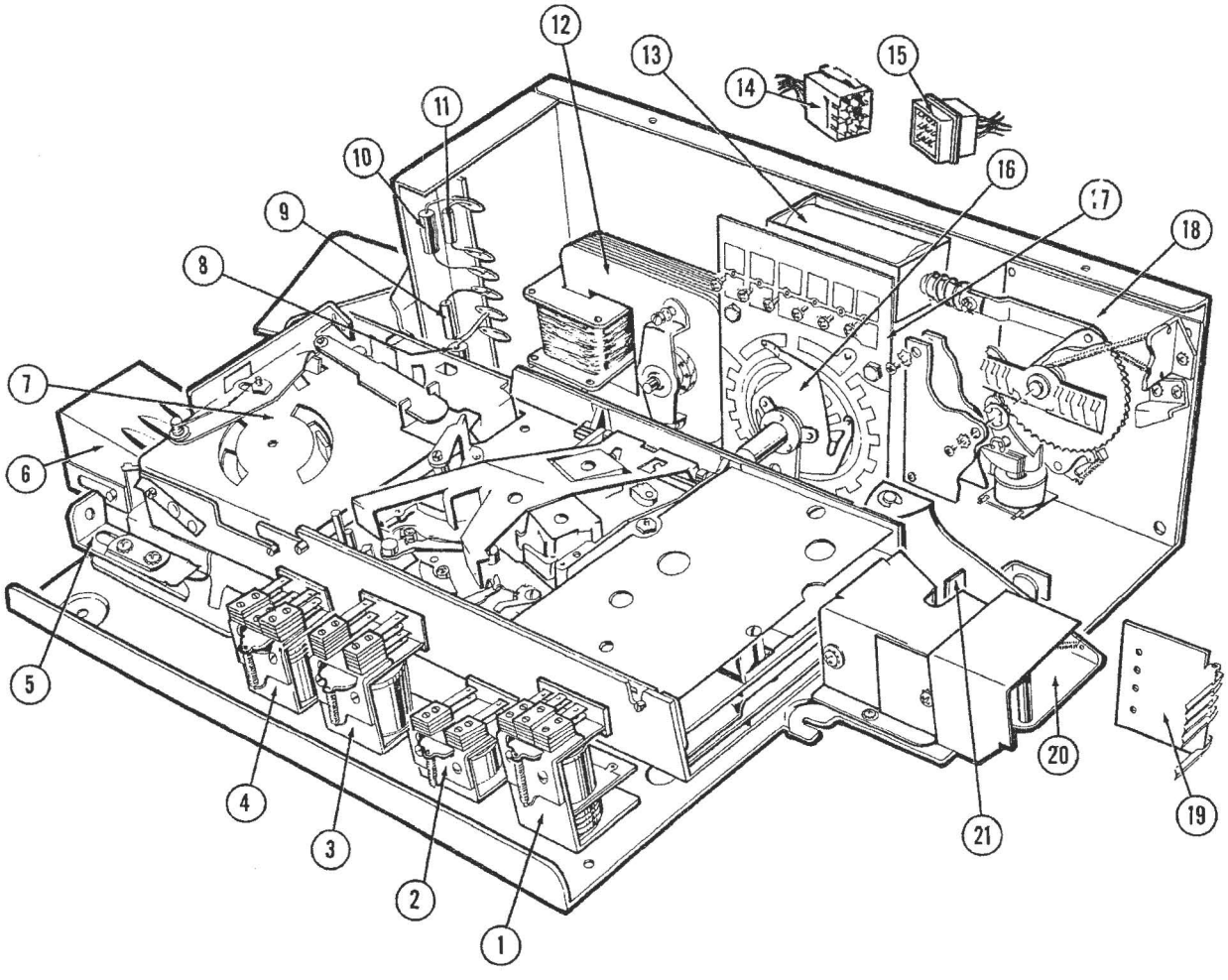

Fig. 117. COIN REGISTER MECHANISM, DUAL PRICING

1. Relay, Anti Cheat	114928	17. Printed Board, Punched	113909
2. Relay, Pricing	114889	18. Accumulator Assembly	114037
3. Relay, Timing #1	113957	Cancel Pawl and Lever Assembly	114032
4. Relay, Pulse	114949	Spring, Cancel Pawl	113999
5. Slide Lock	111125	Ratchet Wheel and Contact	113992
6. Lower Coin Chute Assembly	68552	Washer	113571
7. Slug Rejector	113350	Spring, Ratchet Wheel Return	114003
8. Capacitor, .047 Mfd. 200V	71224-12	Escapement Pawl Assembly	113945
9. Resistor, 100 Ohm, 1 Watt	72312-32	Coil Assembly	45663
10. Capacitor, .015 Mfd. 200V	71218-12	Stop, Cancel Pawl	114479
11. Resistor, 12 Ohm, 1 Watt	72290-32	Printed Board and Spacer Assembly	113960
12. Motor and Pin Assembly	113984	Spring, Cancel Lever Return	58781
13. Solenoid	60717	Spring, Escapement Pawl	114430
14. Socket, 6 Circuit	113528	19. Coin Switch	114029
Socket, 9 Circuit	113530	20. Coin Stop Arm and Switch Assembly	114038
15. Cap, 6 Circuit	113527	Spring	59894
Cap, 9 Circuit	113529	21. Coin Stop Arm, Upper	113427
16. Drive Arm and Contact Assembly,	113980	Spring	114000

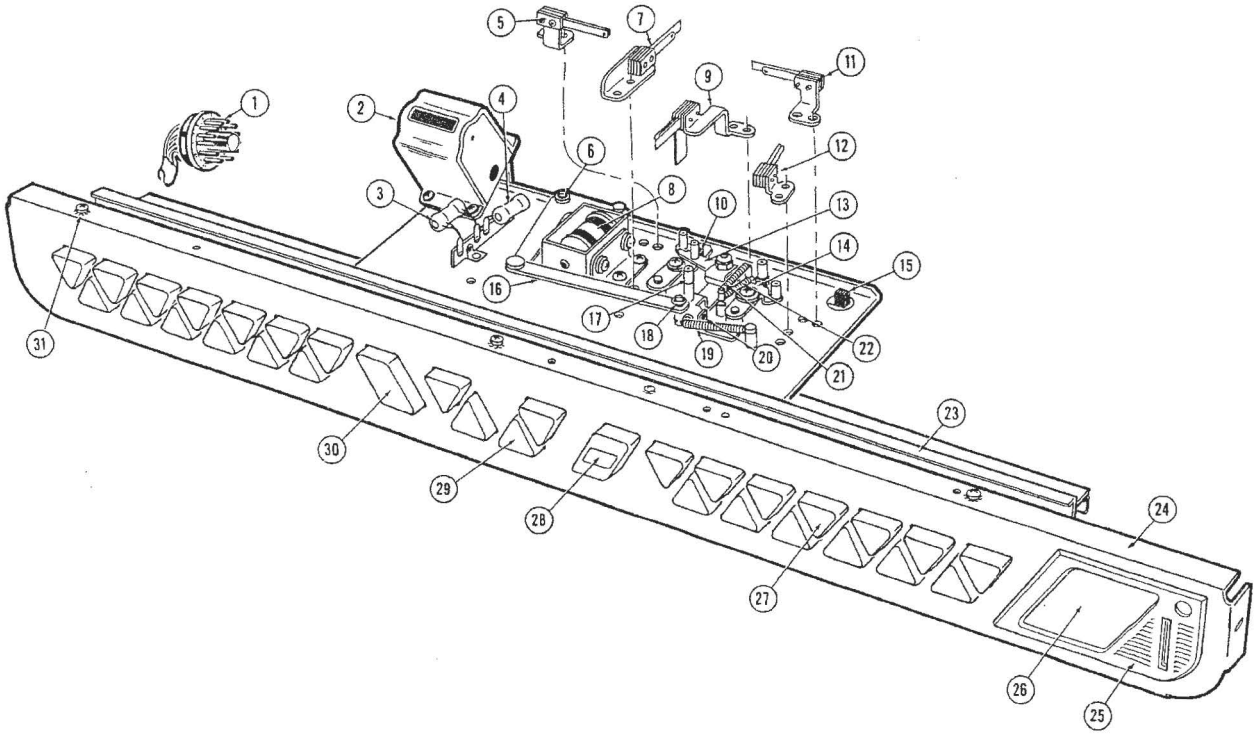

Fig. 118. SELECTOR SWITCH ASSEMBLY, 2404-2404S

1. Plug, 12 Prong	114324
2. Electric Counter	45345
3. Resistor, 150 Ohm 5 Watt	71883-2
4. Resistor, 85 Ohm 5 Watt	71886-3
5. Switch Assembly, Letter Latch	68601
6. Retaining Ring	73724-18
7. Switch Assembly, Letter Series	64981
8. Solenoid, Latch	112104
Plunger	112104-1
Pin	65947
9. Switch Assembly, Control	65007
10. Pawl, Stud and Spacer Assembly, Letters	65009
Shaft Link and Lever Assembly, Numbers	111898
Taper Pin	65362
11. Switch Assembly, Number Latch	68601
12. Switch Assembly, Number Series	64982
13. Trip Lever, Stud and Spacer Assembly	56714
14. Trip Lever and Spacer Assembly	65010
15. Switch, Slide, Return Spring	116723
16. Crank and Link Assembly	111720
17. Release Lever, Stud and Spacer Assembly	56713
18. Retaining Ring	73724-15
19. Spring, Solenoid Return	57130
20. Bracket	56628
Bumper	54246
21. Spring, Letter Trip	57128
22. Spring, Number Latch	57129
23. Mounting Channel	116264
24. Plate Program Selector	116262
25. Casting, R.H.	116157
26. Window Blank, Coin Denomination, Clear	116258
Window Blank	116257
Coin Denomination Plate Assembly (7-50 3-25 1-10)	116623
Coin Denomination Plate Assembly 10 Plays-Half Dollar, 5 Plays-Quarter, 1 Play-Dime	116768-S
27. Selector Buttons, Number, 1-26 inclusive	116110 - 116135
Connector Link, Numbers	116249
Selector Switch Assembly, Numbers	116179
Adjusting Clip	116369
28. Select Button	116317
Select Blank and Silk Screen Assembly	116314
Shield, Select Blank	116315
Panel Lamp #44	24689
Socket, #44 Lamp	66241
Mounting Bracket and Insulator Assembly	116639
29. Letter Buttons, A & B	116078 - 116079
Buttons, C & D	116108 - 116109
Connector Link, Letters	116251
Selector Switch Assembly, Letters	116169
Adjusting Clip	112417
Complete Set, Selector Buttons	116078-B
30. Reset Button	116318
Reset Switch	113249
Reset Button, Bracket	116253
31. Mounting Bracket, Selector Button	116250

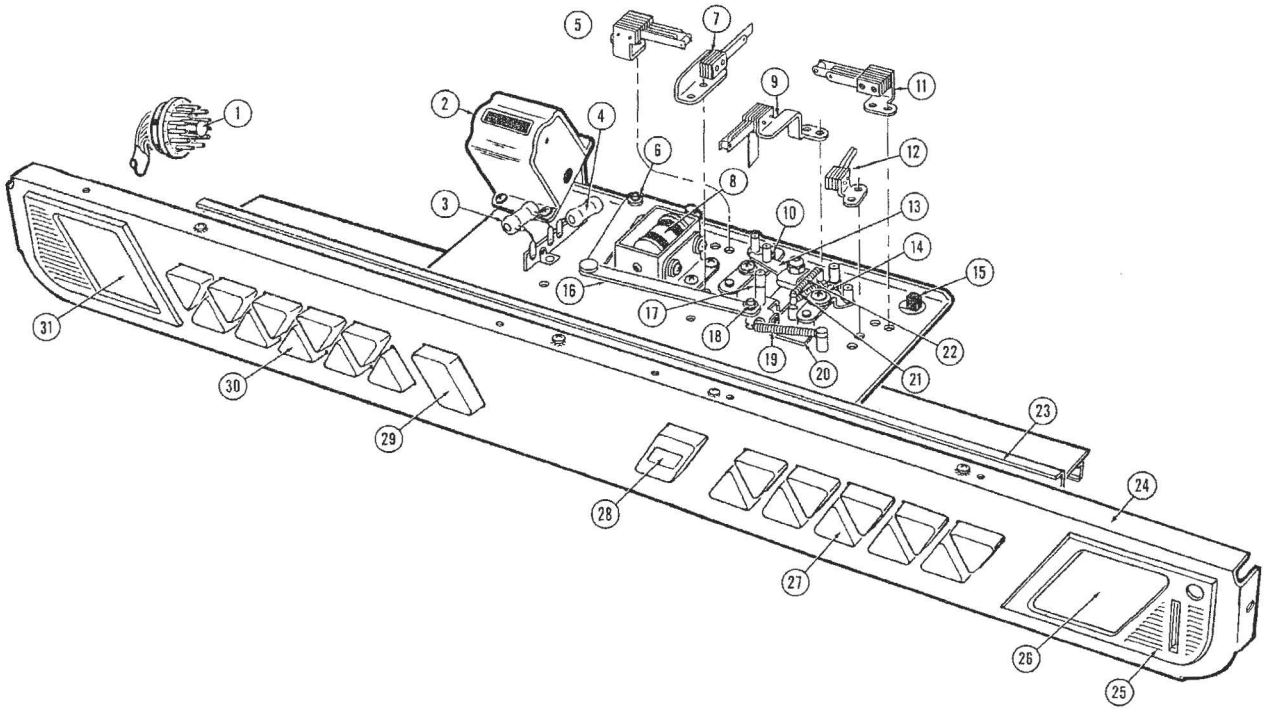

Fig. 119. SELECTOR SWITCH ASSEMBLY, 2410-2410S

1. Plug, 12 Prong	114324
2. Electric Counter	45345
3. Resistor, 150 Ohm, 5 Watt	71883-2
4. Resistor, 85 Ohm, 5 Watt	71886-3
5. Switch Assembly, Letter Latch, 2410 - 2410S	60518
6. Retaining Ring	73724-18
7. Switch Assembly, Letter Series	64981
8. Solenoid, Latch	112104
Plunger	112104-1
Pin	65947
9. Switch Assembly, Control	56704
Switch Assembly, Control 2410S	114336
10. Pawl, Stud and Spacer Assembly, Letters	65009
Shaft Link and Lever Assembly, Letters	111897
Taper Pin	65362
11. Switch Assembly, Number Latch, 2410 - 2410S	60518
12. Switch Assembly, Number Series	64982
13. Trip Lever Stud and Spacer Assembly	56714
14. Trip Lever and Spacer Assembly, Numbers	65010
15. Switch, Slide, Spring Return	116723
16. Crank and Link Assembly	111720
17. Release Lever Stud and Spacer Assembly	56713
18. Retaining Ring	73724-15
19. Spring Solenoid Return	57130
20. Stop Bracket	56628
Bumper	54246
21. Spring, Letter Trip	57128
22. Spring, Number Pawl	57129
23. Mounting Channel	116266
24. Plate, Program Selector	116261
25. Casting, R.H.	116157
Lamp, #12, 2410S	111816
Socket, #12 Lamp, 2410S	111817
Cover and Bracket Assembly, Light Box, 2410S	116309
Separator, Light Box, 2410S	116312
Light Diffuser, 2410S	116954
26. Window Blank, Coin Denomination, Clear	116258
Coin Denomination Plate Assembly, 2410S	116622
27. Selector Button 1 - 5	116136 - 116140
Selector Buttons 6-0	116103 - 116107
Selector Switch Assembly, Numbers	114092
28. Select Button	116317
Select Blank and Silk Screen Assembly	116314
Shield, Select Blank	116315
Lamp #44	24689
Socket, #44 Lamp	66241
29. Reset Button	116318
Switch, Reset	113249
Bracket, Reset Button	116253
30. Selector Buttons A & B	116078 - 116079
Selector Buttons C - K	116080 - 116087
Connector Link, Letters	116259
Adjusting Clip, Letter	112417
Selector Switch Assembly, Letters	116178
Selector Switch Assembly, Letters 2410S	114093
31. Casting, L.H.	116158
Instruction Plate Assembly, L.H., Insert Half Dollars, Quarters, Dimes, Nickels	116624

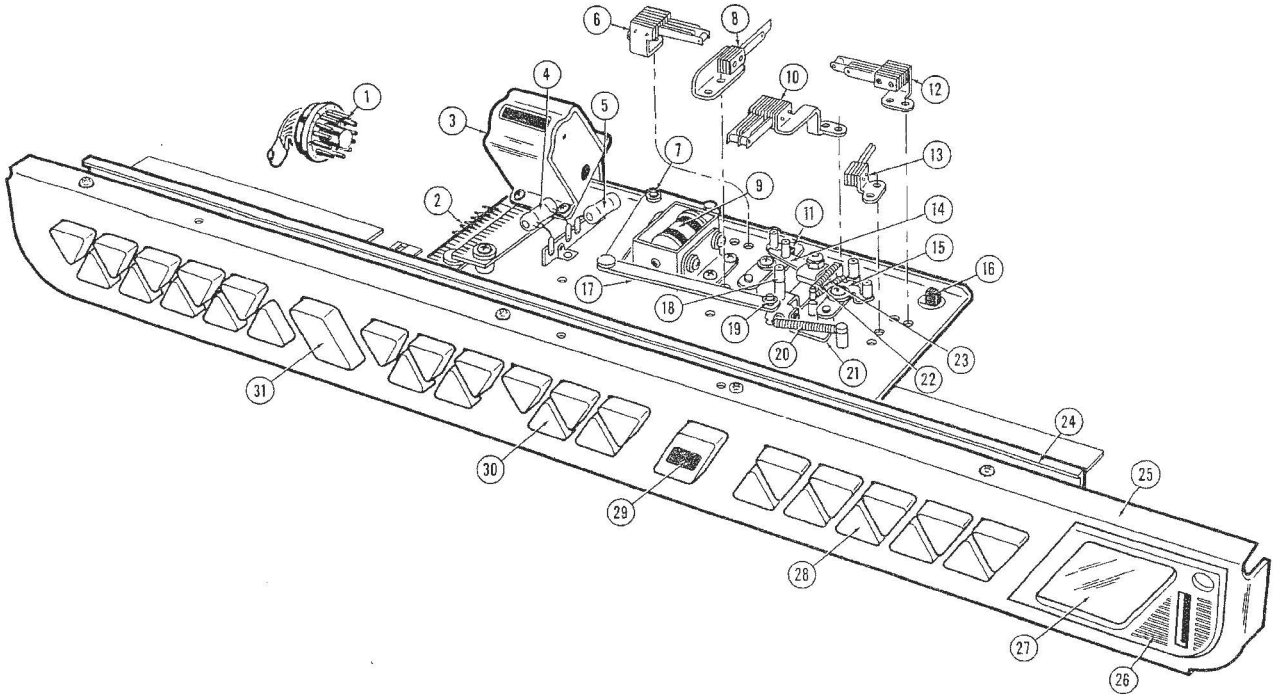

Fig. 120. SELECTOR SWITCH ASSEMBLY, 2400-2400S

1. Plug, 12 Prong	114324
2. Pricing Plate, 2400S	113997
Edge Connector 2400S	114033
3. Electric Counter	45345
4. Resistor, 150 Ohm, 5 Watt	71883-2
5. Resistor, 85 Ohm, 5 Watt	71886-3
6. Switch Assembly, Letter Latch	60518
7. Retaining Ring	73724-18
8. Switch Assembly, Letter Series	64981
9. Solenoid, Latch	112104
Plunger	112104-1
Pin	65947
10. Switch Assembly, Control, 2400	56704
Switch Assembly, Control, 2400S	114336
11. Pawl, Stud and Spacer Assembly, Letters	65009
Taper Pin	65362
12. Switch Assembly, Number Latch	60518
13. Switch Assembly, Number Series	64982
14. Trip Lever, Stud and Spacer Assembly	56714
15. Trip Lever, and Spacer Assembly, Numbers	117695 or 65010
Shaft, Link and Lever Assembly, Numbers	111898
16. Switch, Slide, Spring Return	116723
17. Crank and Link Assembly	111720
18. Release Lever Stud and Spacer Assembly	56713
19. Retaining Ring	73724-15
20. Spring, Solenoid Return	57130
21. Stop Bracket	56628
Bumper	54246
22. Spring, Letter Trip	57128
23. Spring, Number Pawl	57129
24. Mounting Channel	116265
25. Plate, Program Selector	116263
26. Casting, R.H.	116157
Lamp #12 2400S	111816
Socket #12 Lamp	111817
Cover and Bracket Assembly, Light Box, 2400S	116309
Separator, Light Box, 2400S	116312
Light Diffuser, 2400S	116954
27. Window Blank, Coin Denomination, Clear	116258
Window Blank	116257
Coin Denomination Plate	
7 Plays Half Dollar, 3 Plays Quarter, 1 Play Dime, 2400	116623
5 Plays Quarter, 2 Plays Dime, 1 Play Nickel, 2400	116625
10 Plays Half Dollar, 4 Plays Quarter, 1 Play Dime	116770-S
9 Plays Half Dollar, 4 Plays Quarter, 1 Play Dime	116769-S
10 Plays Half Dollar, 5 Plays Quarter, 1 Play Dime	116768-S
28. Selector Buttons "A"-"B"	116078 - 116079
Selector Buttons "C"-"V"	116080 - 116097
Selector Buttons, Complete Set,	116078-A
Selector Switch, Letter 2400	116167
2400S	116178
Connector Link, Letters	116260
Adjusting Clip, Letters	112417
29. Select Button	116317
Select Blank and Silk Screen Assembly	116314
Shield, Select Blank	116315
Lamp, #44 24689 Socket	66241
30. Selector Buttons, Numbers 1-5	116098 - 116102
Selector Buttons, Number 6-0	116103 - 116107
Connector Link, Number	116255
Adjusting Clip, Number	116369
Selector Switch Assembly, Number	116168
31. Reset Button	116318
Switch, Reset	113249
Bracket, Reset Button	116253

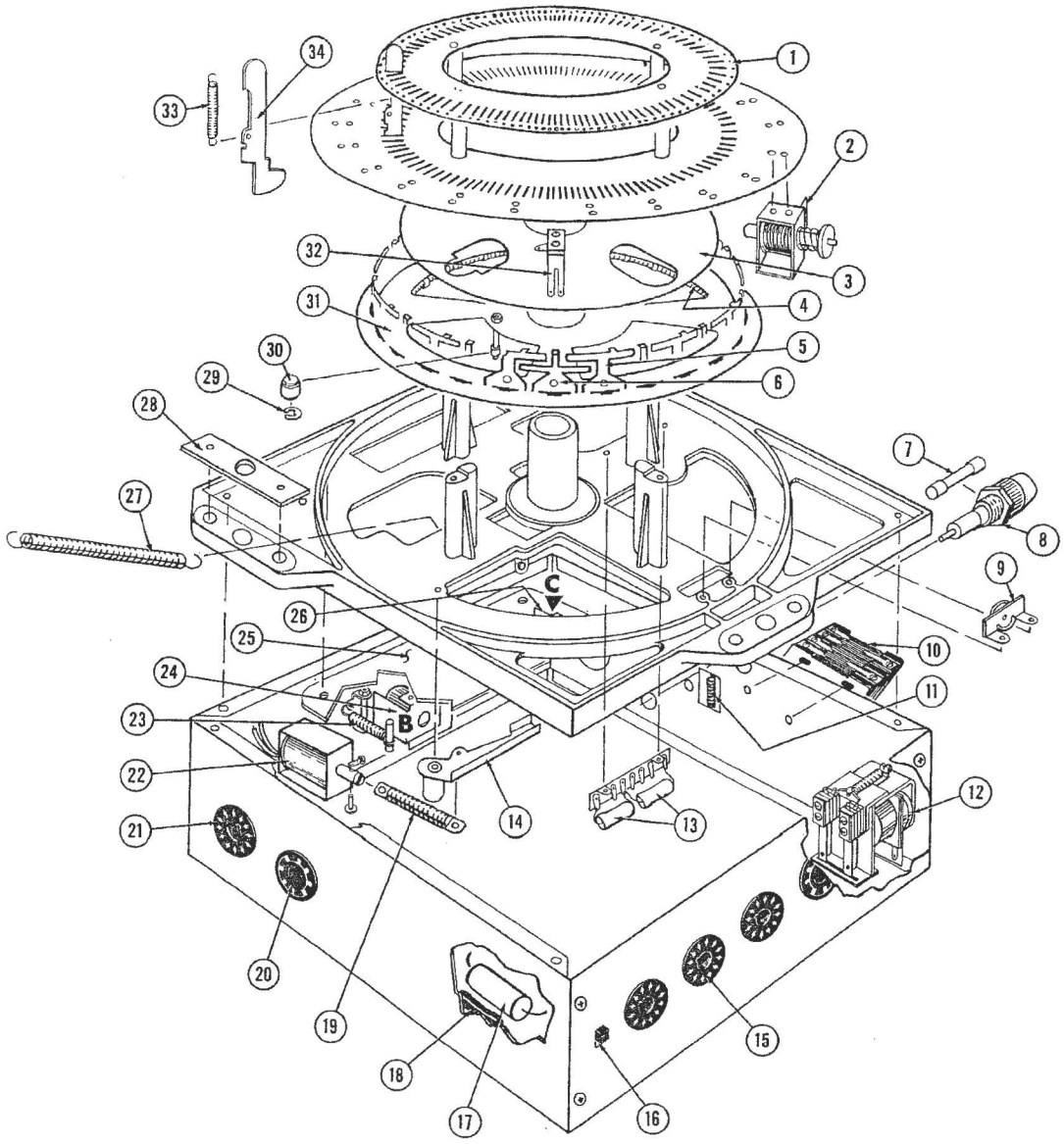

Fig. 121. ELECTRIC SELECTOR 2404-2404S

1.	Plate and Spacer Assembly	64590	17.	Capacitor, 150 Mfd., 50V	73889-620
2.	Solenoid, Selector (26)	64602	18.	Resistor, 50 Ohm, 5W	72986-2
3.	Wobble Plate and Contact Assembly	64605	19.	Spring and Plug Assembly	64783
4.	Spring, Selector Rockers	53489	20.	Socket, 6 Prong	32881
5.	Rocker, Long, Even (13)	64619	21.	Socket, 12 Prong (5)	114325
6.	Rocker, Short, Odd (13)	64618	22.	Solenoid, Driver	64722
7.	Fuse, 4/10 Amp.	45509	23.	Spring, Stop Arm (2)	64773
8.	Fuse Post	45352	24.	Magnet and Frame Assembly L.H.	64651
9.	Roller and Bracket Assembly (3)	64630	25.	Mounting Plate and Magnet Assembly	64645
10.	Micro Switch, Reversing (2)	61596	26.	Magnet and Frame Assembly R.H.	64650
11.	Spring, Reversing Switch	61173	27.	Spring, Return	64781
12.	Relay, Timing, No. 2	64711	28.	Guide Plate, (3)	61850
13.	Resistor, 120 Ohm, 5W (2)	71885-2	29.	Retaining Ring	73124-18
14.	Pin, Hub and Arm Assembly	64637	30.	Roller and Bracket Assembly	64613
	Retaining Ring	73724-18	31.	Rotating Plate	64609
	Retaining Ring	73724-15	32.	Contact Assembly (3)	64601
15.	Socket, 11 Prong (5)	38492	33.	Spring, Latch Pin	57110
16.	Switch	116724	34.	Latch Pin (104)	64606

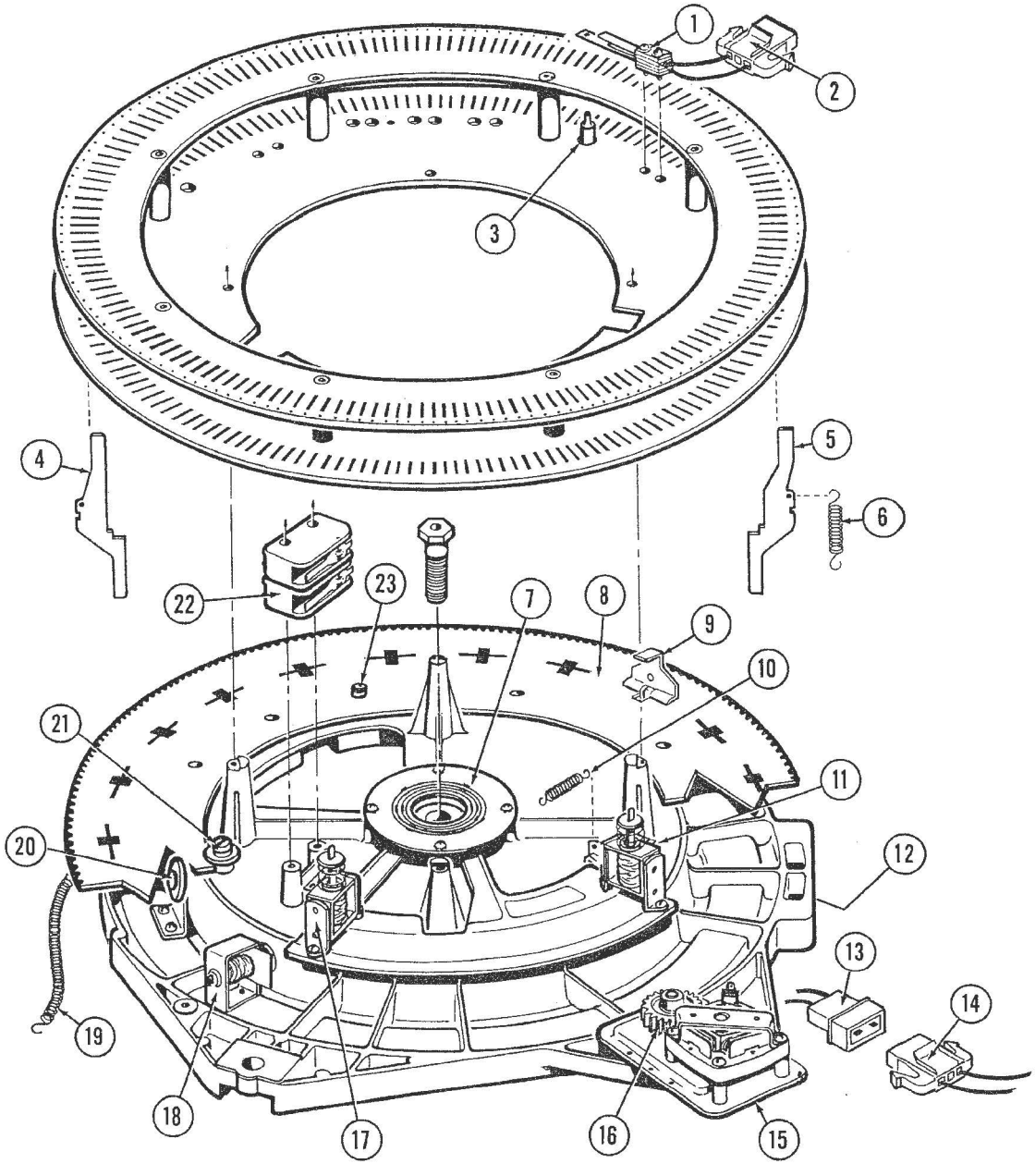

Fig. 122. ELECTRIC SELECTOR 2400-2400S 115848

1. Switch Assembly, Over-ride	65952	14. Socket, 3 Circuit	111528
2. Socket, 3 Circuit	111528	15. Motor and Gear Assembly	111913
3. Wobble Ring 67927	Spacer 68650	16. Gear and Hub Assembly	68717
4. Latch Pin, Inner (100)	110941	Roll Pin	73782-32
5. Latch Pin, Outer (100)	110942	17. Solenoid, Selector, Number (9)	68617
6. Spring, Latch Pin (200)	110480	18. Solenoid, Selector, Letter (20)	68594
7. Contact Plate	66186	19. Spring, Rotating Plate Assembly	68755
8. Rotating Plate	67920	20. Bracket and Roller Assembly (3)	68651
9. Rocker, Rotating Plate (20)	67926	21. Roller, Guide (3)	68656
10. Spring, Number Quadrant	62773	Stud, Eccentric Guide Roller	69659
11. Solenoid Selector, Number (1)	68804	Stud, Guide Roller (2)	68657
12. Socket, 11 Prong (3)	38492	Retaining Ring, Guide Roller (3)	73724-31
Plug, 11 Prong (1)	48501	22. Micro Switch,	
13. Cap, 3 Circuit	111526	Start and Reverse (2)	61596
Contact (5)	111527	23. Stop Pin (10)	115411

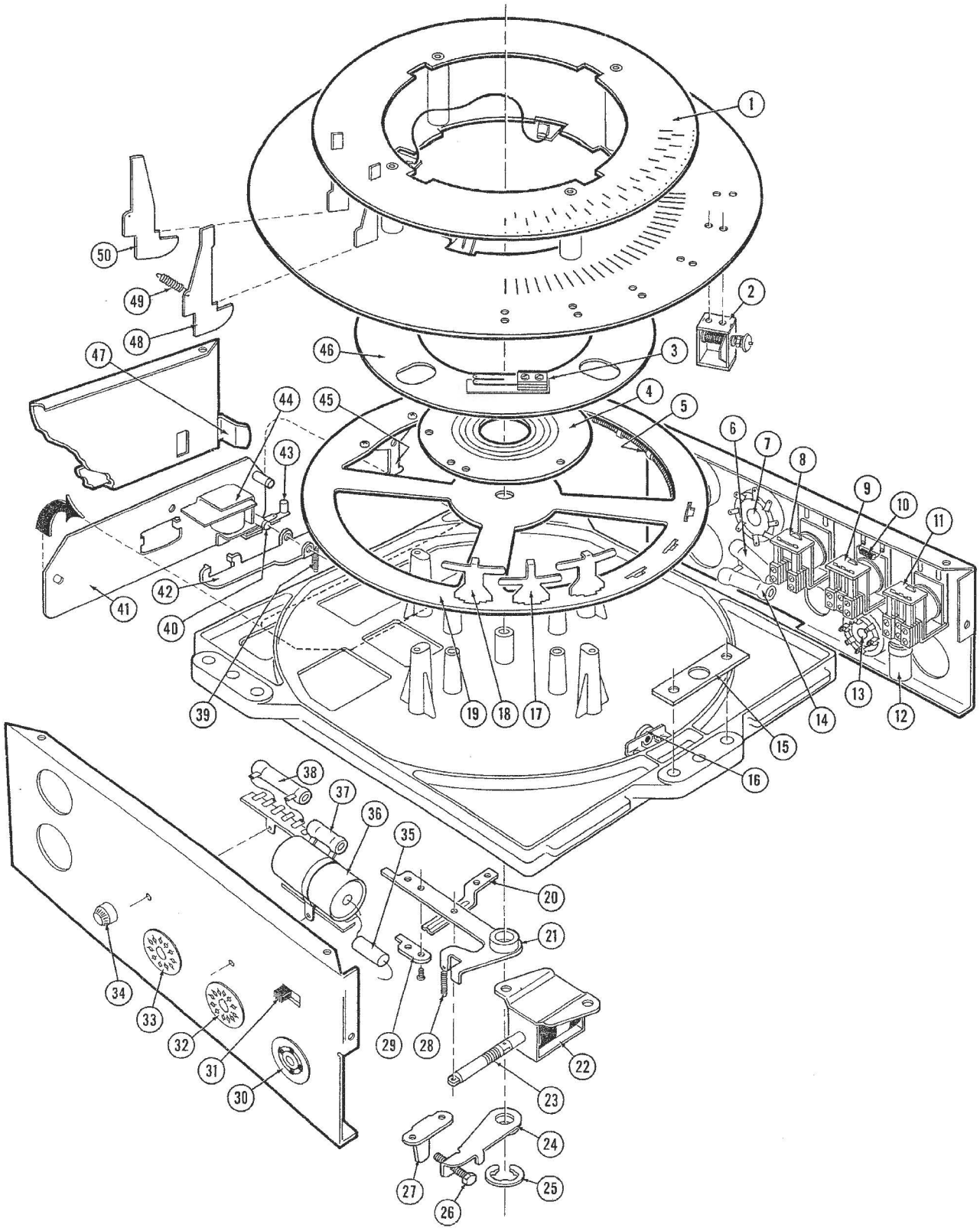

Fig. 123. ELECTRIC SELECTOR, 2410 - 2410S