WURLITZER

2400 SERIES
2400, 2404, 2410

SERVICE MANUAL

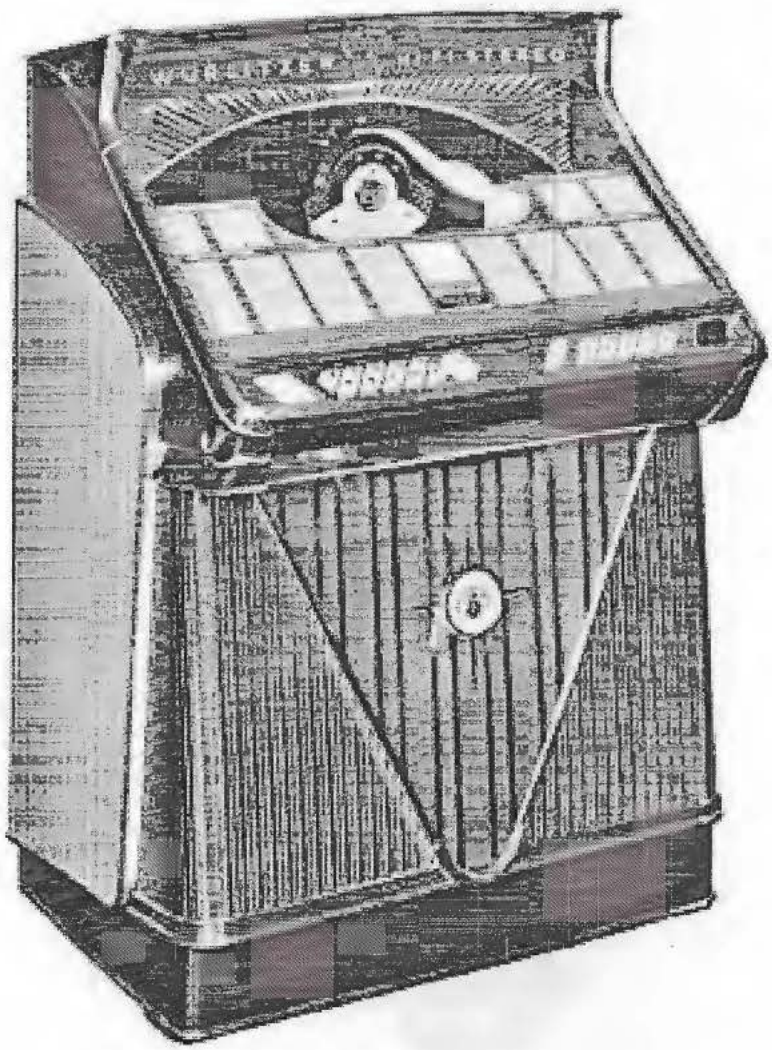

TABLE OF CONTENTS

2400 SERIES PHONOGRAPHS

Page

COIN EQUIPMENT

2400S-2400, 2410S-2410, 2404S-2404

References to "Right hand" and "Left hand" are made when viewing the phonograph from the front, unless otherwise specified.

The coin equipment used on all Wurlitzer 1960 Models consists of the conventional slug rejector assembly and either the single pricing coin register mechanism (playrak) or Wurlitzer's dual pricing coin register mechanism. These units are mounted inside of the right hand panel. The figures following show the method for removal of the units. The various parts are identified and listed as an aid in describing the adjustments which follow.

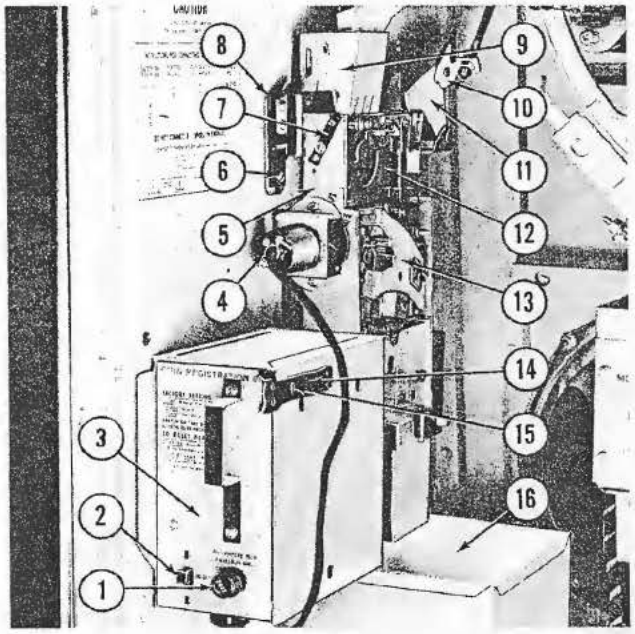

Fig. 1. COIN EQUIPMENT, PLAYRAK

1.	Fuse Post	51485
2.	Switch	62886
3.	Coin Register Mechanism, Playrak	115851
4.	Plug, 5 Pin	116617
5.	Slug Rejector Assembly, Bracket and Coin Separator	110982
6.	Shoulder Screw Top 116717 Bottom	116716
7.	Latch Spring, Coin Separator	National
8.	Slide Lock	111125
9.	Lower Coin Chute Assembly	68552
10.	Lever and Bracket Assembly	113854
11.	Pin and Actuator Assembly	68545
12.	Coin Separator, 5-10-25-50	National
13.	5-10-25 Cent Slug Rejector	National
14.	Catch and Spring Assembly	64883
15.	Shipping Screw	73531-1
16.	Coin Bag Housing Assembly	116352

Although those phonographs shipped from the factory with the playrak coin register mechanism are set for: 1 play - dime, 3 plays - quarter, and 7 plays - half dollar; they may be adjusted to nickel selection if desired. Remove the two screws (Fig. 2, Items 8 & 9), and set the nickel flipper (Item 10) in the position shown. Reverse the location of screws (Items 8 & 9) and replace the slug rejector. Move the slide switch (Fig. 1, Item 2) to the 5-10-25 position and reset the stop levers to the desired number of credits as shown in Figure 2, Item 2. The front plate of the playrak (Fig. 2, Item 1) is cut back to provide clearance for raising the unit and disengaging its hinge pins as shown in Figure 2, Item 11.

CAUTION!

Turn the line switch OFF before removing the playrak!

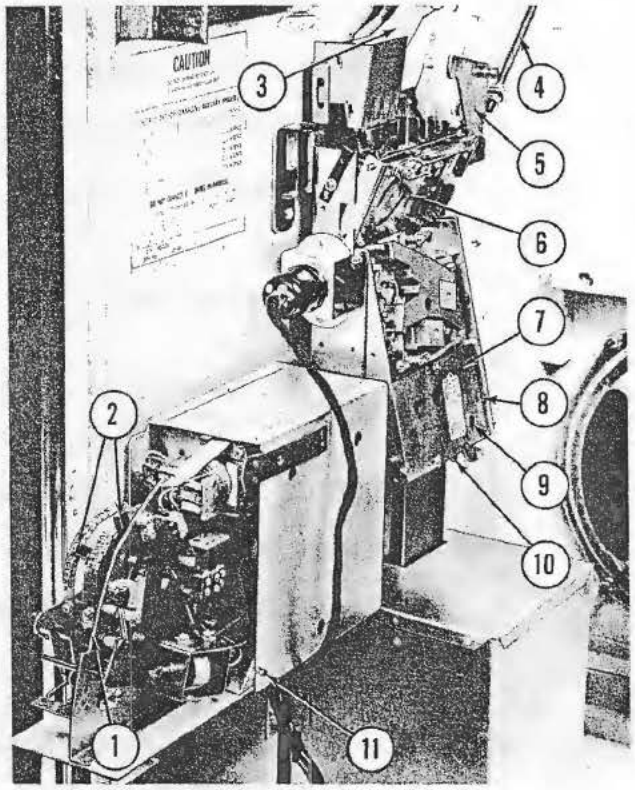

Fig. 2. REMOVAL OF COIN EQUIPMENT

1.	Front Plate	66039
2.	Stop Lever and Spring Assembly	66132
3.	Coin Chute Assembly	116303
4.	Reject Rod	116429
5.	Pin and Actuator Assembly	68545
6.	Coin Separator	National
7.	5-10-25 Cent Slug Rejector	National
8.	Screw, Truss Head	National
9.	Screw	National
10.	Nickel Flipper	National
11.	Pin, Hinge, (2)	66445

The 5-10-25 slug rejector may be removed by first removing the coin separator (Fig. 2, Item 6). The procedure is as follows: Raise the lower coin chute (Fig. 1, Item 9). Unlatch the lever (Item 10) and move the lever and bracket assembly aside. Release the latch spring (Fig. 1, Item 7), lift and remove the coin separator (Item 12) and the slug rejector as shown in Figure 2, Item 7.

CAUTION!

When replacing the slug rejector, handle with care so as to prevent damage to the nickel flipper (Fig. 2, Item 10).

The preceding instructions will also apply to the dual pricing coin register mechanism as shown in Figure 3.

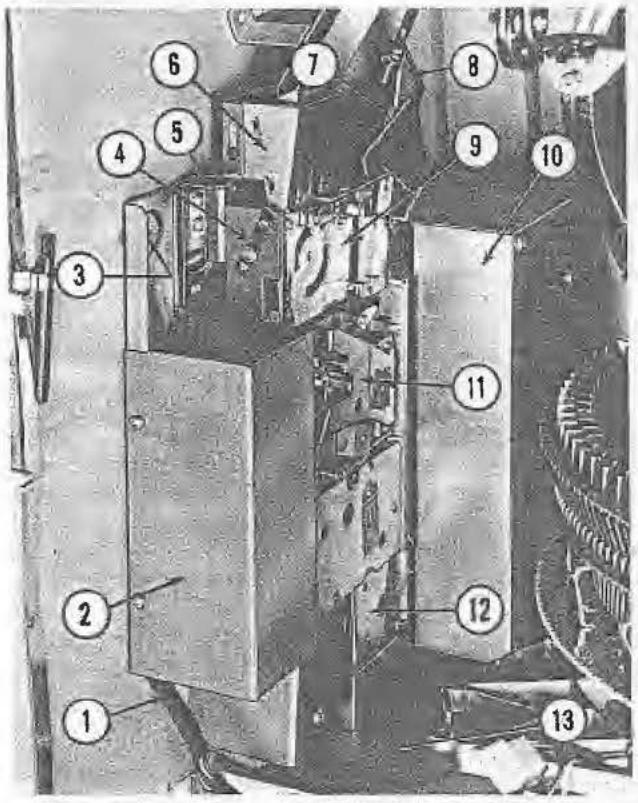

Fig. 3. DUAL PRICING COIN EQUIPMENT

1. Cable and Plug Assembly	115974
2. Shield, Relays	116268
3. Shipping Screw 5/8 - 8, R.H.	73592-21
4. Latch Spring, Coin Separator	National
5. Slide Lock	111125
6. Lower Coin Chute Assembly	68552
7. Pin and Actuator Assembly	68545
8. Lever and Bracket Assembly, Reject Arm	113854
9. Coin Separator	National
10. Dust Cover and Liner Assembly	114643
11. 5-10-25 Cent Slug Rejector	National
12. Coin Casting and Support Assembly	113961
13. Housing, Coin Bag	116352

The dual pricing coin register mechanism is a combination slug rejector and credit accumulator which will store up to a maximum of 20 credits. The unit is mounted on three shoulder screws and held by two shipping screws shown at Item 3. The entire assembly may be removed by disconnecting the cable plugs at the junction box, removing the two shipping screws mentioned above, lifting the slide lock (Fig. 3, Item 5) and disengaging the lever and bracket assembly (Item 7). Slide the top of the assembly back on its slotted mounting holes, tilt it toward the changer mechanism and lift off. Pricing changes may be made without removing the entire assembly. The pricing board is accessible by removing the cover and liner assembly (Item 10). Information on the various pricing arrangements is printed on the cover. By turning in the screws on the printed board (Fig. 4, Item 11) until contact is made with the patches, credits will be increased according to the instructions on the cover and liner assembly.

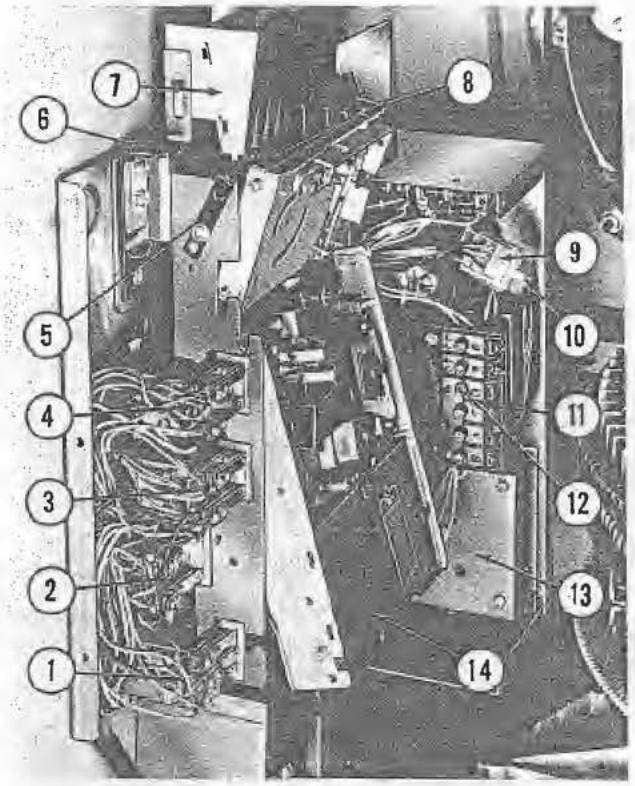

Fig. 4. COIN REGISTER ACCESSIBLITY

1. Relay, Anti-Cheat	114928
2. Relay, Pricing	114889
3. Relay, T.R. #1	114929
4. Relay, Pulse	114949
5. Latch Spring, Coin Separator	National
6. Slide Lock	111125
7. Lower Coin Chute Assembly	68552
8. Coin Separator	National
9. Cap, 9 Circuit	113529
10. Socket, 9 Circuit	113530
11. Printed Board, Pricing Strip	113909
12. Screw, Pricing Change 6-25 x 5/16"(6)	73551-23
13. Accumulator Assembly	114037
14. 5-10-25 Slug Rejector	National

Slug rejectors are the same on all models and are a product of National Rejector, Inc., of St. Louis, Missouri. It is recommended that National Rejectors, Inc., and their branch offices be employed for service or replacement of parts other than those indicated by Wurlitzer numbers. The mechanical adjustment of National components of the slug rejector assembly should be made in accordance with the "Rejector Manual", furnished by National Rejectors, Inc.

1. PLAYRAK ADJUSTMENTS

CAUTION!
Make these adjustments with the power OFF!

a. COIN SWITCH

The coin switches should be adjusted to provide a 1/32" opening of the contact points. This adjustment should be made when the coin paddle (Fig. 5, Item 3) is held against the coin exit of the rejector by the tension of the coin switch movable blade. The tension of the movable blades should be adjusted so that a thin coin, when stopped on the paddle and released, will actuate the movable blade; making contact with the stationary blade and clear the paddle. A pulse of more than 3 seconds duration should normally blow the .8 ampere fuse in the coin magnet (Fig. 6, Item 6) circuit.

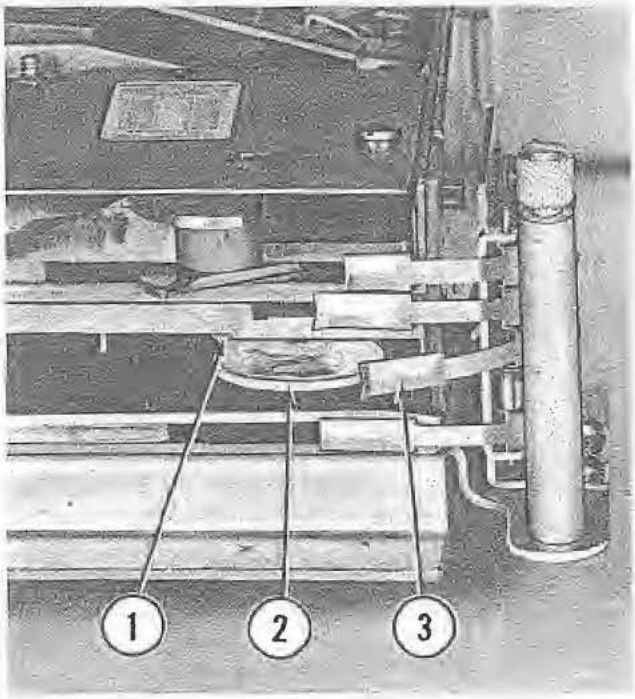

Fig. 5. COIN SWITCH ADJUSTMENT

1. Critical Point
2. Coin
3. Coin Paddle

The final test for the coin switches should be made with the coin assembly in the phonograph in its normal operating condition. Test each individual coin track, ten consecutive times, with coins of varied wear. If one coin fails to register correctly, that particular coin switch should be reexamined and if necessary, readjusted.

Before proceeding to playrak adjustments, check for the condition shown in Figure 6, Item 1. When the studs (Item 4) on the lower end of the two lever, hub and stud assemblies are engaged with the

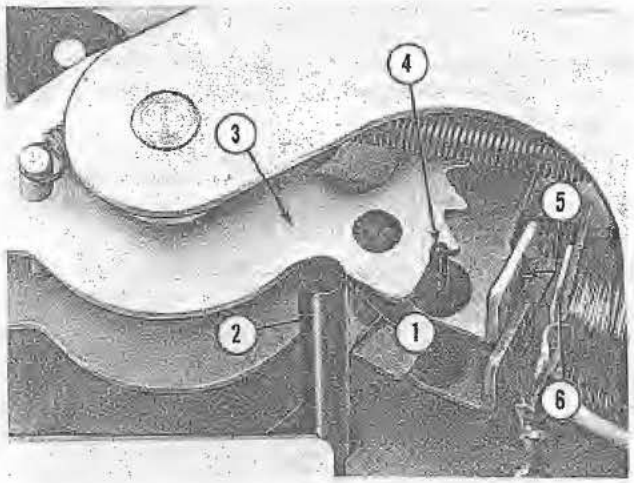

Fig. 6. PLAYRAK ADJUSTMENTS

1. Point of Contact, Driver Pin	
2. Driver Pin, Cancel Wheel	66045
3. Accumulator, Wheel and Hub Assembly	66131
4. Stud, Lever, Hub and Stud Assembly	66129
5. Armature End of Lever, Hub and Stud Assembly	
6. Coin Magnet, Coil Assembly	65770

first tooth of their respective accumulator wheels, as shown, the drive pin (Item 2) of the cancel wheel should rest squarely against the edge of the two accumulator wheels. Should this condition not exist, examine the playrak for bent studs or sprung frame. Correction should be made before proceeding with adjustments.

b. KEY SWITCH ADJUSTMENT

The key switch and bracket assembly may be adjusted by loosening its mounting screws (Fig. 7, Item 2) and moving the bracket to provide 1/32" opening of the key switch contacts (Item 3) when the insulating stud (Item 1) on the cancel wheel is resting slightly on the flat portion of the formed tip of the blade. With one credit on the accumulator wheel, the actuator (Fig. 8, Item 1) should clear the formed tip of the key switch blade as shown in Item 2.

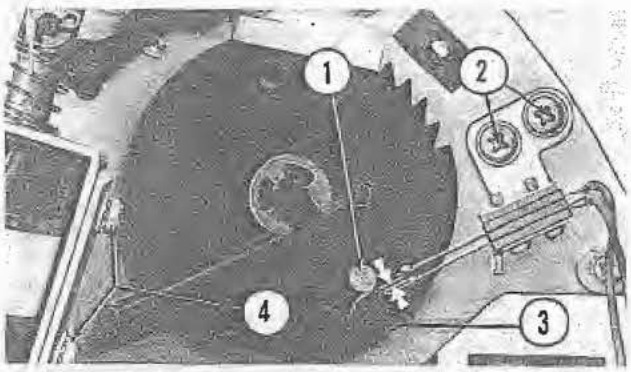

Fig. 7. KEY SWITCH ADJUSTMENT

1. Actuator, Key Switch	58255
2. Screws, Key Switch Adjustment, 6-32	73533-22
3. Dimension, 1/32" Opening	
4. Screws, Cancel Solenoid Adjustment	73533-22

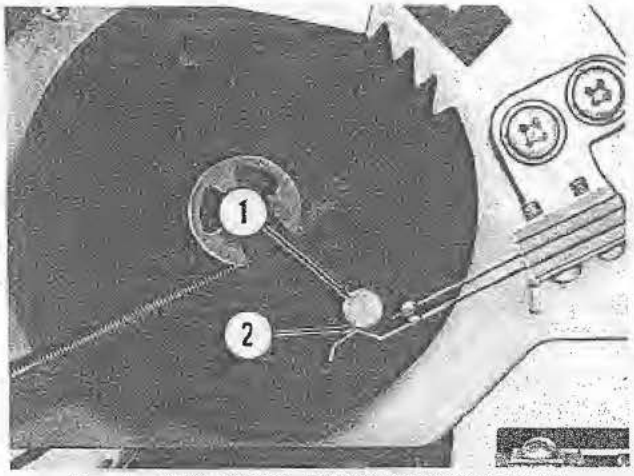

Fig. 8. KEY SWITCH CLEARANCE ADJUSTMENT

1. Actuator, Key Switch 58255
2. Clearance from Movable Blade

c. STOP LEVER AND QUADRANT INDEXING STRIP

The stop levers (Fig. 9, Item 3) should be set at 5 credits and the escapement studs released, allowing the two accumulator wheels to advance to 5 credits. The drive pin on the cancel wheel (Fig. 10, Item 1) should rest squarely against the edge of the accumulator wheels (Item 2). Should this condition not exist, loosen the indexing strip adjusting screws (Fig. 9, Items 2 & 6) and with the 10¢ - 50¢ indexing strip set at the center of its adjusting range, move the 25¢ indexing strip until the above condition is met. Tighten the adjusting screws in the indexing strips.

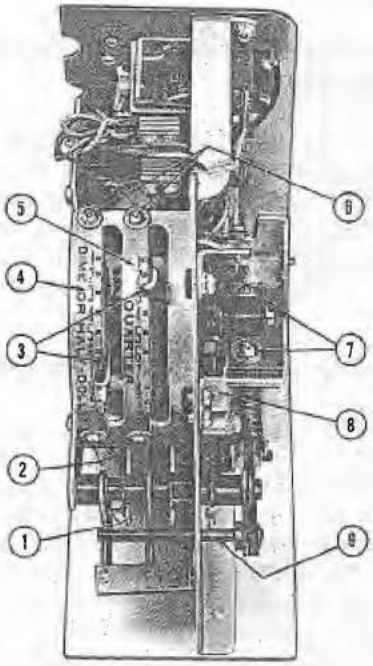

Fig. 9. STOP LEVER AND QUADRANT INDEXING STRIP ADJUSTMENT

1. Hub and Lever Assembly, Lockout 66130
2. Screws, Adjusting, Index Strips 73533-1
3. Stop Lever and Spring Assembly 66132
4. Indexing Strip, Dime and Half Dollar 66135
5. Indexing Strip, Quarter 66133
6. Screws, Adjusting, Index Strips 73533-1
7. Screws, Cancel Solenoid Adjustment 73533-22
8. Guard, Cancel Pawl 66393
9. Pivot Arm Assembly 66126

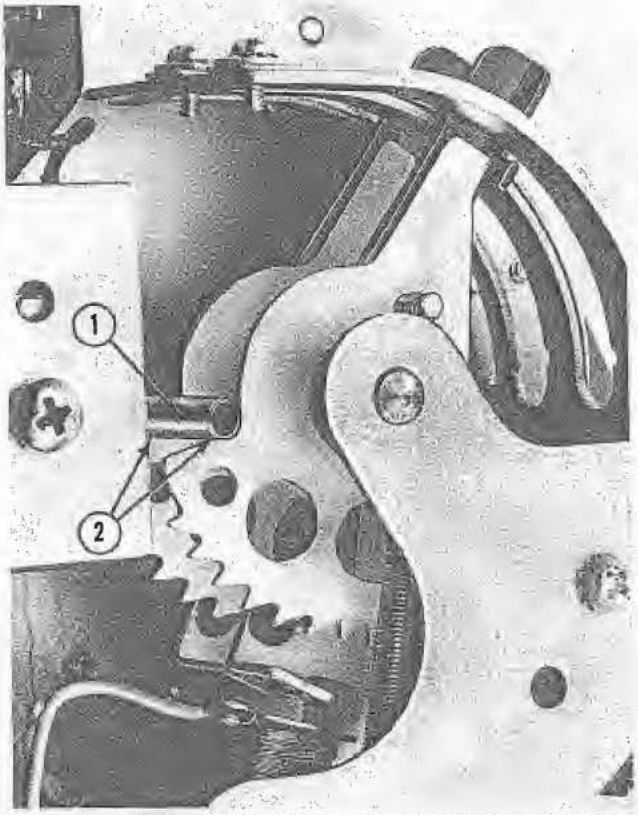

Fig. 10. STOP LEVER AND QUADRANT INDEXING STRIP ADJUSTMENT

1. Driver Pin, Cancel Wheel 66045
2. Accumulator Wheel and Hub Assembly 66131

d. CANCEL STROKE ADJUSTMENT

The cancel solenoid mounting screws should be loosened and the solenoid backed off before making this adjustment. The adjustment is made with the eccentric cam (Fig. 11, Item 3). The cancel stroke should be sufficient to return the accumulator wheel one full tooth plus .010" overtravel, as shown in Figure 12, Item 1.

NOTE!

The thickness of the red instruction tags accompanying the phonograph is approximately .010".

With cancellation held manually in position, as shown in Figure 11, Item 1, set the cancel solenoid up on its mounting bracket until its plunger is firmly bottomed. Tighten the adjusting screws and check for correct cancel action.

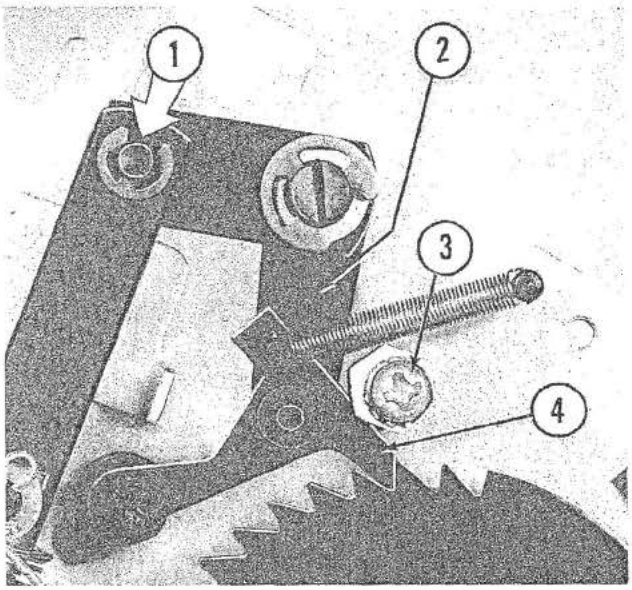

Fig. 11. CANCEL STROKE ADJUSTMENT

1. Manually Actuate at this Point
2. Pivot Arm and Pawl Assembly 66125
3. Adjustment Cam, Eccentric 42868
4. Pin and Pawl Assembly 66127

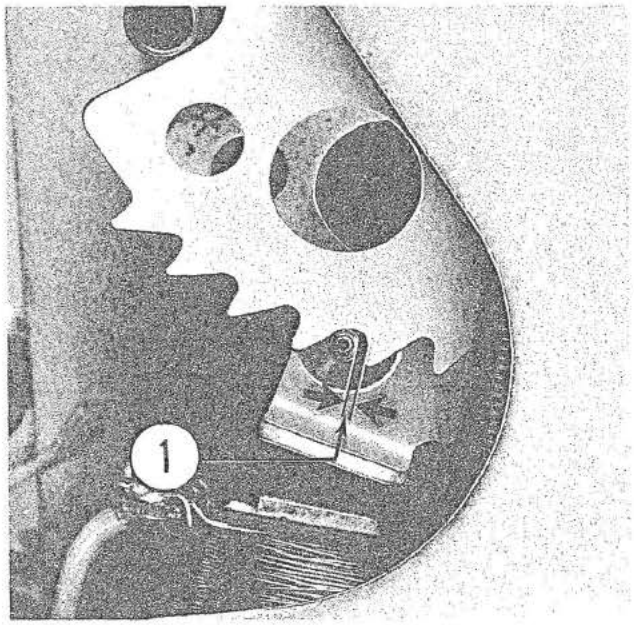

Fig. 12. ECCENTRIC CAM ADJUSTMENT FOR CANCEL STROKE

1. Dimension, .010" Overtravel

e. CANCEL PAWL STOP BRACKET ADJUSTMENT

Loosen the adjustment screws (Fig. 13, Item 1) and move the stop bracket to permit the cancel pawl to engage the tooth of the cancel wheel at a point 1/3 the length of the slant surface from the tip of the tooth (Item 3). During cancel operation, the cancel pawl stop bracket should be free from the edge of the cancel pawl (Item 4) marked "No Drag".

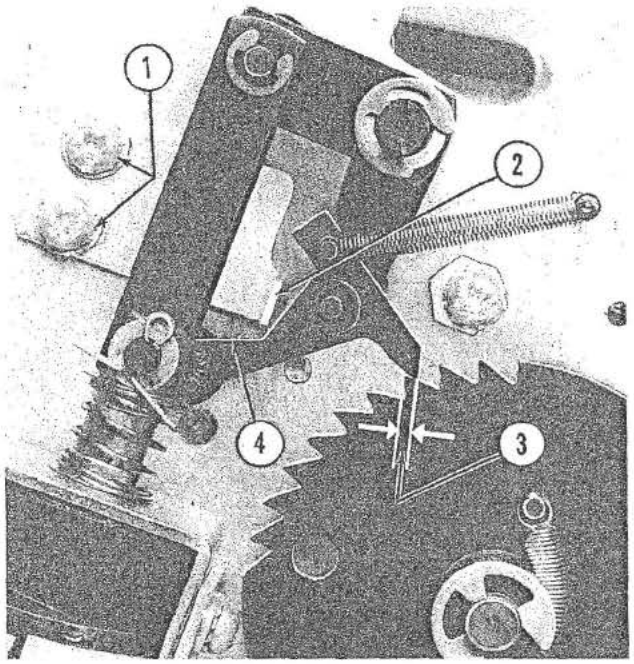

Fig. 13. STOP BRACKET ADJUSTMENT

1. Screws, Adjusting, Cancel Pawl Stop Bracket, 6-32 73533-21
2. Stop Bracket, Cancel Pawl 66069
3. Dimension, Engagement 1/3 of Slant Surface
4. No Drag of Pawl on Bracket

2. DUAL PRICING COIN MECHANISM ADJUSTMENT

Figure 14 is the dual pricing coin register mechanism with the covers and the slug rejector removed. The various components named, will be referred to in the following adjustment procedures and in the Trouble Shooting Chart. The unit is further broken down as an aid in viewing the various adjustments.

a. ACCUMULATOR PAWL ADJUSTMENT

Loosen the accumulator coil adjusting screws (Fig. 15, Item 3). Insert a .005" shim (Item 4) the full length of the radius gap between the armature and the magnet. Manually hold the armature in the operated position and move the magnet coil to provide a uniform .005" clearance throughout the length of the arc and also provide .002" to .005" clearance as indicated at Item 1. Tighten the adjusting screws and recheck for correct requirements.

b. CANCEL PAWL STOP BRACKET

Manually add three or more credits on the accumulator wheel (Fig. 15, Item 10). Holding the cancel solenoid plunger (Fig. 16, Item 5) in its operated position, adjust the stop bracket (Fig. 15, Item 9) for a maximum clearance of 1/64" (Fig. 17, Item 1) between the bracket and the pawl.

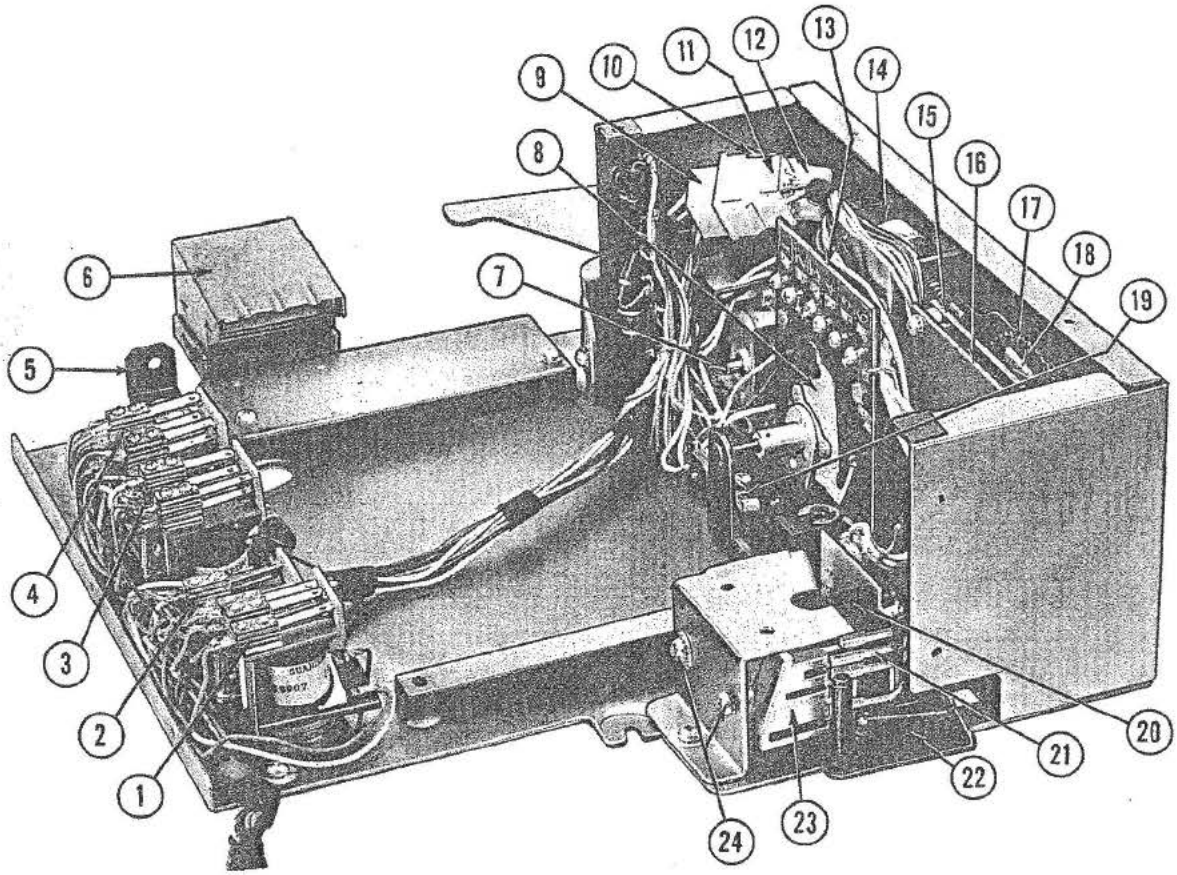

Fig. 14. DUAL PRICE COIN REGISTER MECHANISM

1. Relay, Anti-Cheat	114928	13. Printed Board, Pricing	113909
2. Relay, Pricing	114889	14. Solenoid, Cancel	60717
3. Relay, T.R.#1	114929	15. Printed Board, Credit Lights	113960
4. Relay, Pulse	114949	16. Accumulator Assembly	114037
5. Slide Lock	111125	17. Ratchet Wheel and Contact Assembly	113992
6. Lower Coin Chute Assembly	68552	18. Arm and Contact Assembly, Credit Lights	113991
7. Motor and Pin Assembly	113984	19. Switch, Full Cycle	113627
8. Drive Arm and Contact Assembly	113980	20. Coin Stop Arm, Upper	113427
9. Cap, 9 Circuit	113529	21. Coin Paddles, Coin Switch	114029
10. Cap, 6 Circuit	113527	22. Coin Stop Arm and Bracket Assembly, Lower	113927
11. Socket, 9 Circuit	113530	23. Coin Casting and Support Assembly	113961
12. Socket, 6 Circuit	113528	24. Adjusting Screws, 8-32 x 1/4", R.H.	73533-34

c. INDEXING OF PRINTED BOARD

With one credit on the accumulator wheel, the contact spring (Fig. 18, Item 1) should rest in the center of the 5¢ credit light patch (Item 3). The printed board may be rotated slightly by loosening its 4 mounting screws, 2 of which are shown at Items 2 and 4.

d. CANCEL SOLENOID ADJUSTMENT

The cancel action is factory set to take 3 credits off the accumulator wheel for each selection made. Through the circuitry of the pricing bars (Fig. 23, Items 20 & 22) and the pricing relay (Fig. 14, Item 2) one credit will be added before cancellation when a 10¢ selection is made.

To adjust the cancel solenoid, loosen the adjusting screws (Fig. 16, Item 6). Add 3 or more credits on the accumulator wheel. Holding the cancel solenoid plunger firmly bottomed in the solenoid, position the solenoid to just cancel 3 teeth at the escapement pawl (Fig. 15, Item 7). While holding the cancel solenoid plunger actuated, recheck the cancel pawl stop bracket (Fig. 15, Item 9) setting. The ratchet wheel should be securely engaged by the tip of the cancel pawl and stopped by the stop bracket, preventing further rotation of the ratchet wheel. Should this interlocked condition not exist, reset the cancel pawl stop bracket (adjustment b.).

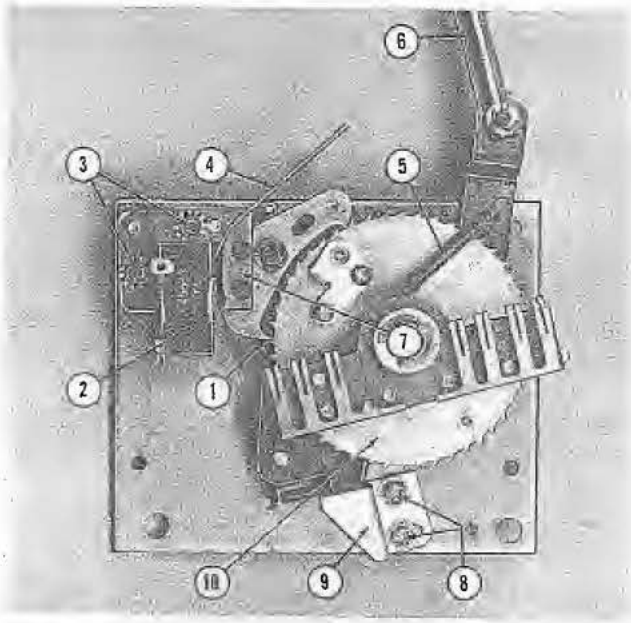

Fig. 15. ACCUMULATOR PAWL ADJUSTMENT

1. Dimension, .002" to .005" Clearance
2. Coil and Lamination Assembly, Accumulator 45787
3. Screws, Accumulator Coin Adjustment, 6-32 x 1" Cap 73571-187
4. Feeler Gauge .005"
5. Spring, Ratchet Wheel 114003
6. Plunger, Cancel Solenoid 60717-1
7. Escapement Pawl Assembly 113945
8. Screw, Stop Bracket Adjustment, 6-32 x 1/4", R.H. 73533-22
9. Stop, Cancel Pawl 114479
10. Ratchet Wheel and Contact Assembly 113992

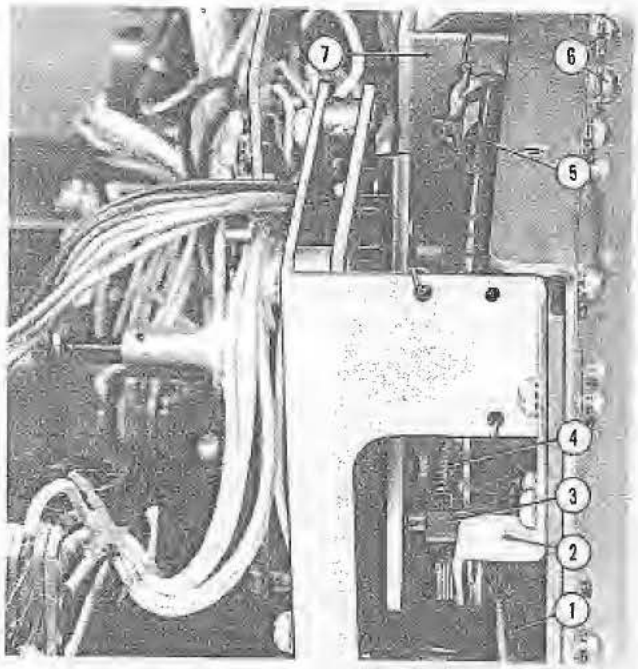

Fig. 16. CANCEL SOLENOID ADJUSTMENT

1. Spring, Cancel Pawl 113999
2. Stop Bracket, Cancel Pawl 114479
3. Cancel Pawl and Lever Assembly 114032
4. Spring, Ratchet Wheel 114003
5. Plunger, Cancel Solenoid 60717-1
6. Screws, Cancel Solenoid Adjusting 73533-22
7. Solenoid, Cancel 60717

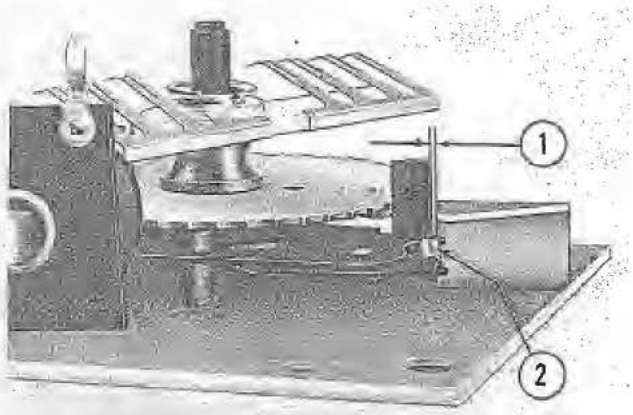

Fig. 17. CANCEL PAWL STOP BRACKET ADJUSTMENT

1. Dimension, 1/64" Maximum
2. Spring, Cancel Pawl 113999

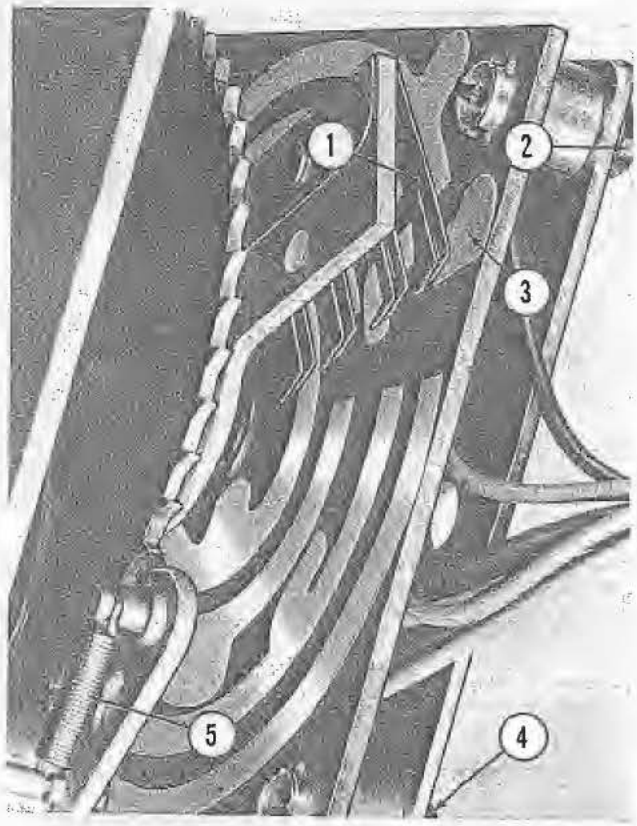

Fig. 18. INDEXING OF PRINTED BOARD

1. Contact Spring, L.H. 113566
2. Adjusting Screw, 6-32 73533-22
3. Five Cent Credit Patch, Printed Board
4. Adjusting Screw, 6-32 73533-22
5. Spring, Escapement Pawl 114430

e. COIN CASTING ADJUSTMENT

The adjusting screws (Fig. 19, Items 5 & 6) may be loosened to permit shifting of the coin casting (Item 4) so that its four coin tracks align with the four exits of the slug rejector. The 5-10-25 and 50¢ coins should pass freely from the slug rejector through the coin casting.

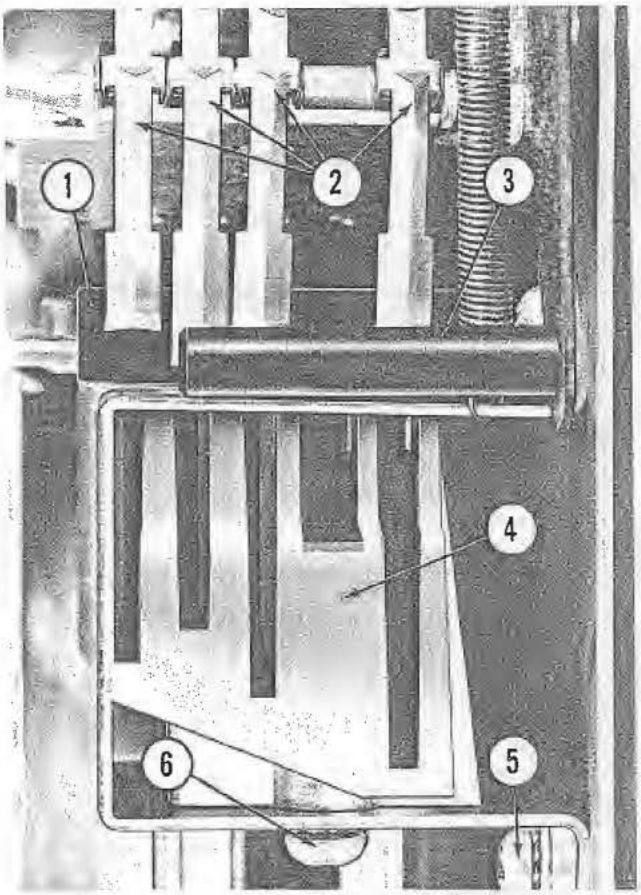

Fig. 19. COIN CASTING ADJUSTMENT

1. Coin Stop Arm, Upper	113427
2. Coin Paddles	
3. Pin, Coin Stop	113585
4. Coin Casting, Coin Chute, Lower	113229
5. Adjusting Screw, 8-32 x 1/4", R.H., Sems	73533-34
6. Adjusting Screw, 8-32 x 1/4", R.H., Sems	73533-34

f. COIN SWITCH ASSEMBLY ADJUSTMENT

CAUTION!

Turn the power OFF before proceeding with the following adjustments.

Each of the four coin paddles (Fig. 19, Item 2) should align accurately with their respective coin tracks. The retracting tension of the movable blades (Fig. 20, Item 6) should hold the coin paddles against the coin casting (Fig. 19, Item 4) in the at rest position. The 5¢ coin switch contacts should have a .030" opening and as the coin actuates the paddle it should deflect the stationary blade .030", passing freely into the cash bag. With 10, 25, and 50¢ coins resting on the lower coin stop (Fig. 20, Item 1). Lift each paddle to normal rest position and then release. The weight of each coin should operate its coin switch with .030" wiping action. The normally open coin switch contact gap should be .040" to .055" for the 10, 25 and 50¢ switches.

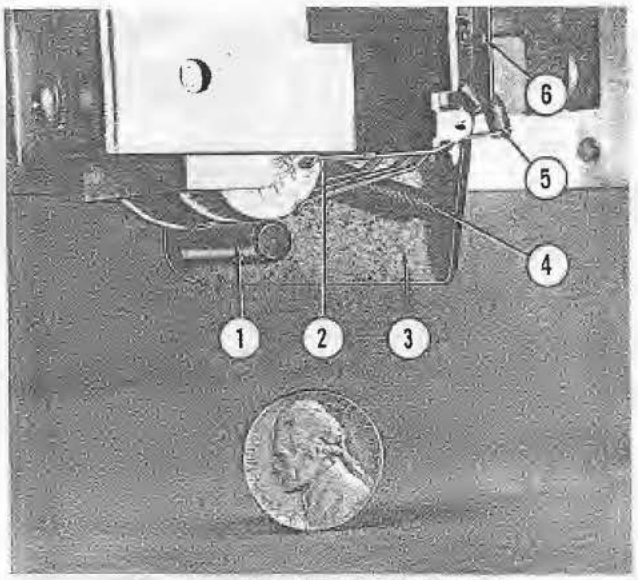

Fig. 20. COIN SWITCH ADJUSTMENT

1. Pin, Coin Stop	113585
2. Nickel Coin Paddle	
3. Coin Stop Arm Assembly, Lower	113927
4. Spring, Retracting, Lower Coin Stop Arm	59894
5. Actuator, Coin Paddle	
6. Movable Blade, Coin Switch	

g. FULL CYCLE SWITCH ADJUSTMENT

The full cycle switch (Fig. 21, Item 3) should be set to provide good contact with at least .030" wiping action. The opening of the contacts, when actuated by the cam end of the upper coin stop arm (Item 5), should occur at a point that will stop the mechanism with the adjusting screw and bearing assembly (Item 4) in the detent of the actuating cam (Item 5).

h. CONTACT SPRING PRESSURE SETTING - CREDIT LIGHTS AND ACCUMULATOR

The contact springs (Fig. 22, Item 1) of the credit light circuits should have 15 to 30 grams pressure against the printed board. The rotary contact arm (Item 2) should also have 15 to 30 grams pressure against its printed board.

3. SELECTOR SWITCH ADJUSTMENTS

Due to the similarity between the selector switch assemblies, only close up views of the 2400-S and the 2404 are shown. Adjustment procedures are similar on all models. The selector switches, both letter and number, the push buttons and their respective latch bars (Fig. 24, Items 3, 6 and 9) must work freely with no bind. The latch bars must engage and disengage the push rods freely as the selector buttons are depressed and released. Should this condition not exist, examine the selector switch assembly for binds and correct before making any adjustments.

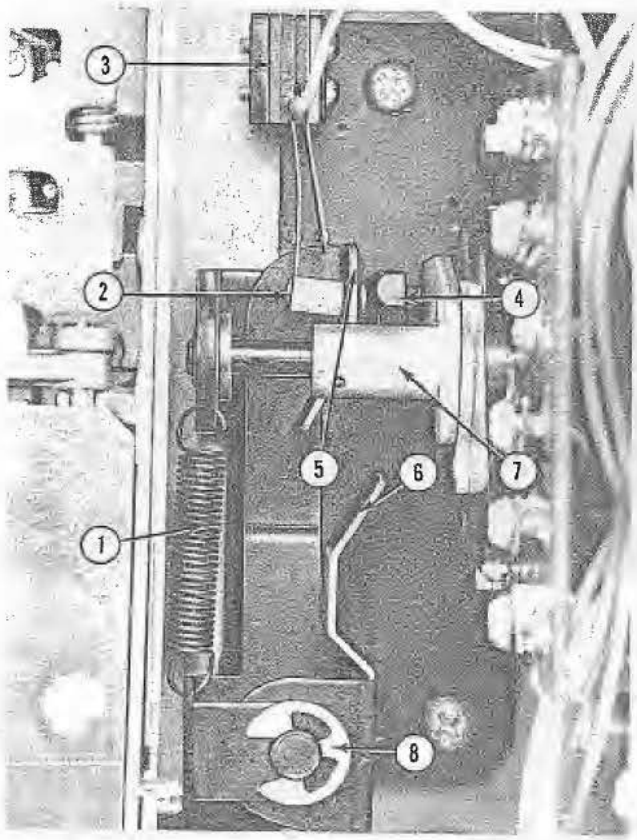

Fig. 21. FULL CYCLE SWITCH ADJUSTMENT

1. Spring, Coin Block Arm	114000
2. Actuator, Movable Blade, Full Cycle Switch	
3. Switch Assembly, Full Cycle	113627
4. Screw and Bearing Assembly, Adjusting	113983
5. Actuating Cam, Coin Stop Arm, Upper	113427
6. Actuating Cam, Coin Stop Arm, Lower	113927
7. Drive Arm and Contact Assembly	113980
8. Retaining Ring	73724-25

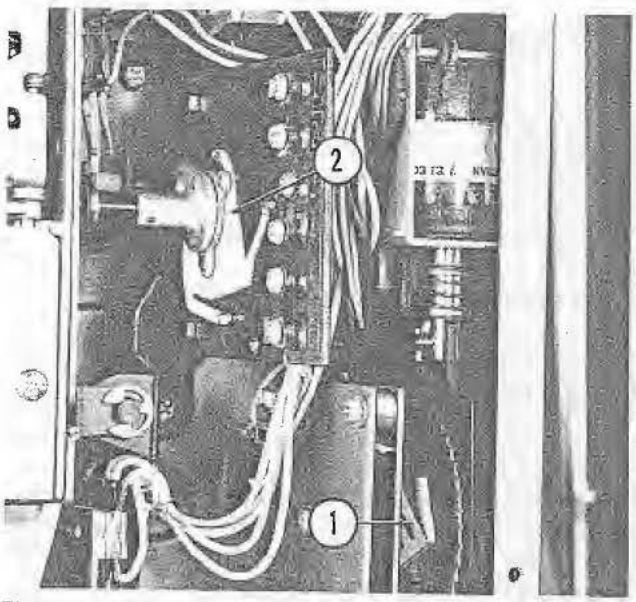

Fig. 22. CONTACT PRESSURE ADJUSTMENT, PRINTED BOARD

1. Contact Spring, L.H., Credit Lights	113566
2. Contact Spring, Accumulator	113916

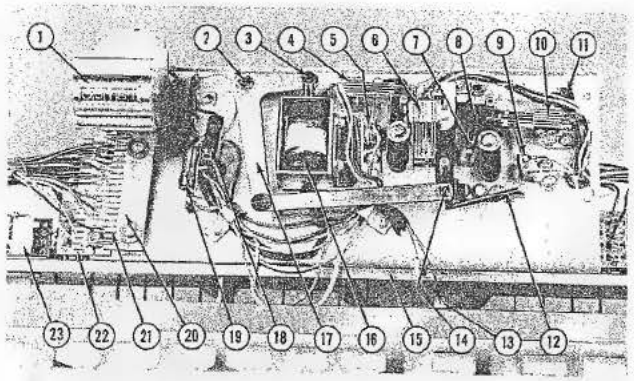

Fig. 23. SELECTOR SWITCH ASSEMBLY, 2400S

1. Electric Counter	45345
2. Retaining Ring	73724-18
3. Pin, Solenoid Plunger	65947
4. Switch, Letter Latch, Assembly	60518
5. Switch, Letter Series, Assembly	64981
6. Switch, Control, Assembly	114336
7. Spring, Letter Latch	57128
8. Spring, Number Pawl	57129
9. Switch, Number Series	64982
10. Switch, Number Latch	60518
11. Switch, Free Play	116723
12. Spring, Solenoid Return	57130
13. Light Socket, Select	66241
14. Retaining Ring	73724-15
15. Mounting Channel	116265
16. Solenoid, Latch	112104
17. Crank and Link Assembly	111720
18. Resistor, 85 Ohm, 5 Watt, Control	71886-3
19. Resistor, 150 Ohm, 5 Watt, Make Select Light	71883-2
20. Pricing Plate, Dime	113997
21. Edge Connector	114033
22. Pricing Plate, 15 Cent	113997
23. Switch, Reset	113249

a. SELECTOR SWITCH CONNECTOR LINK ADJUSTMENT

Figure 24 shows the underside of the 2400-S selector switch assembly. The connecting link (Item 5) between the two letter switch banks, synchronizes the movement of the letter switch latch bars (Items 3 and 9) and must be accurately set before making

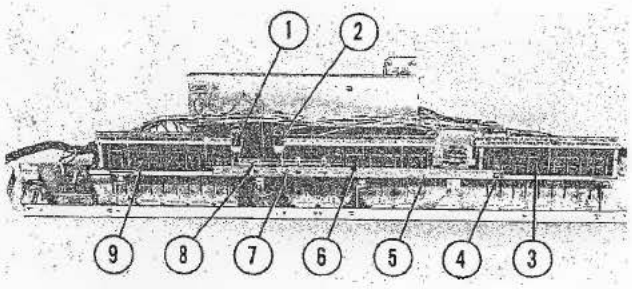

Fig. 24. CONNECTOR LINK ADJUSTMENT, 2400

1. Shaft, Link and Lever Assembly, Numbers	111898
2. Shaft, Link and Lever Assembly, Letters	111897
3. Latch Bar, Letter Switch Assembly	
4. Screw, Adjusting, Letter Button Connector Link	73533-44
5. Connector Link, Letter Switch Banks	116260
6. Latch Bar, Number Switch Assembly	
7. Screw, Adjusting, Letter Adjusting Clip	73533-34
8. Screw, Adjusting, Number Adjusting Clip	73533-34
9. Latch Bar, Letter Switch Assembly	

further adjustments. Press a letter button in the left bank and note the travel on its latch bar. Then press a letter button in the right bank, its latch bar should have exactly the same travel. Should the movement of the two latch bars vary, they may be synchronized by loosening the adjusting screw (Item 4) and shifting the connector link. The connector link (Item 5) is coupled to the shaft, link, and lever assembly (Item 2) by an adjustable clip (Item 7). This clip should be adjusted for minimum backlash consistent with freedom of movement. The same coupling method is employed between the number switch latch bar (Item 6) and its shaft, link, and lever assembly (Item 1). The adjusting screw (Item 8) may be loosened and the clip set to remove any backlash. Figure 25 shows the underside of the 2404 selector switch assembly. The number switch latch bars (Items 12 and 17) are connected together by the link (Item 8). The two latch bars may be synchronized by loosening the adjusting screw (Item 10) and shifting the connecting link. The clip, held by the adjusting screw (Item 2) should be set for minimum backlash consistent with freedom of movement. The letter switch latch bar (Item 7) is adjustable for minimum backlash by loosening the adjusting screw (Item 5) and moving the adjusting clip.

The 2410 selector switch assembly shown in Figure 26 has one number switch bank and one letter switch bank and will therefore not need synchronizing. The backlash between the latch bars and the shaft, link, and lever assemblies (Items 1 and 2) can be adjusted by means of the screws shown at Items 3 and 4.

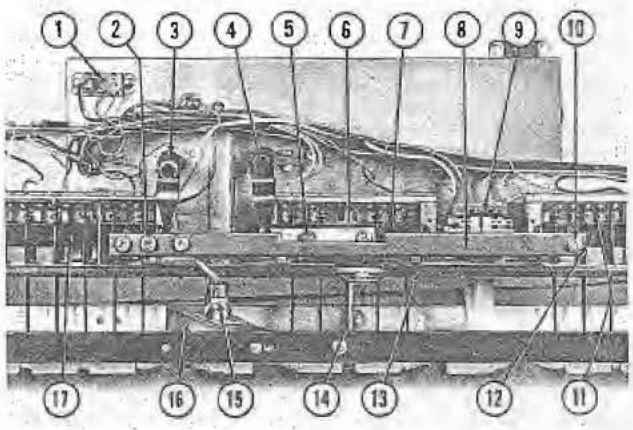

Fig. 25. CONNECTOR LINK ADJUSTMENT, 2404

1. Switch, Free Play	116723
2. Screw, Adjusting	
3. Shaft Link and Lever Assembly, Numbers	111898
4. Shaft Link and Lever Assembly, Letters	111897
5. Screw, Adjusting	
6. Switch Assembly, Letter Selector	116169
7. Latch Bar, Letter Button	
8. Connector Link, Number Switch Assembly	116249
9. Switch, Reset	113249
10. Screw, Adjusting	
11. Selector Switch Assembly, Numbers	116179
12. Latch Bar, Number Buttons	
13. Mounting Channel	116264
14. Mounting Bracket (3)	116250
15. Light Socket and Wire Assembly	66241
16. Mounting Bracket and Insulator Assembly	116639
17. Latch Bar, Number Buttons	

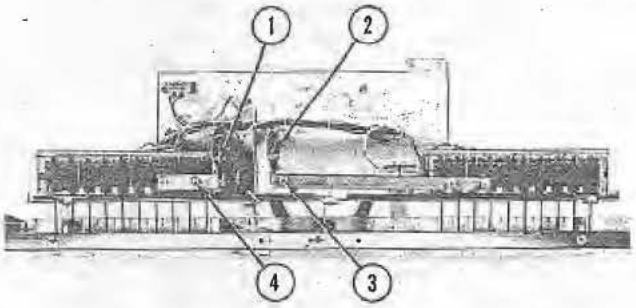

Fig. 26. CONNECTOR LINK ADJUSTMENT, 2410

1. Hub and Lever Assembly, Numbers	111898
2. Hub and Lever Assembly, Letters	111897
3. Adjusting Clip, Letters	112417
4. Adjusting Clip, Numbers	116369

b. LATCH SOLENOID STOP BRACKET ADJUSTMENT

The latch switches and control switch have been removed in Figure 27 as an aid in viewing the adjustment discussed. This adjustment should be made with the crank and link (Item 9) in its normal

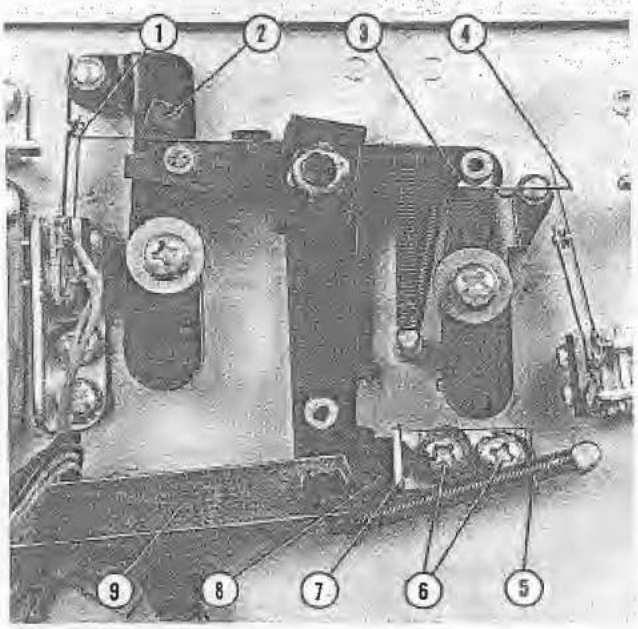

Fig. 27. STOP BRACKET ADJUSTMENT

1. Dimension, 1/32" Clearance	
2. Square Stud, Pawl Stud and Spacer Assembly, Letter	65009
3. Square Stud, Pawl Stud and Spacer Assembly, Number	56712
4. Dimension, 1/32" Clearance	
5. Spring, Solenoid Retracting	57130
6. Screws, Stop Bracket Adjusting	
7. Stop Bracket	56628
8. Bumper	54246
9. Crank and Link Assembly	111720

rest position. Loosen the two adjusting screws (Item 6) and move the stop bracket (Item 7) to provide 1/32" clearance (Items 1 & 4) between the square studs and their adjacent levers. This adjustment applies to all of the 2400 series.

c. LATCH ADJUSTMENT

The adjusting screws (Fig. 28, Items 9 and 10) serve to take up the backlash in their respective linkages. Energize latch solenoid. Manually hold a letter button fully depressed. Loosen the screw (Item 10) and allow the square stud (Item 2) to seat itself in the notch of the trip lever (Item 3) and tighten the screw. Check all letter buttons for positive contact of their respective slide switches when the button is latched. The number button latching is adjusted in the same manner while manually holding a number button fully depressed. The adjusting screw (Item 9) should be loosened, allowing the square stud (Item 7) to seat in the notch of the trip lever (Item 8). Tighten the adjusting screw and check each number button for positive contact of their respective slide switches. This adjustment applies to all of the 2400 series.

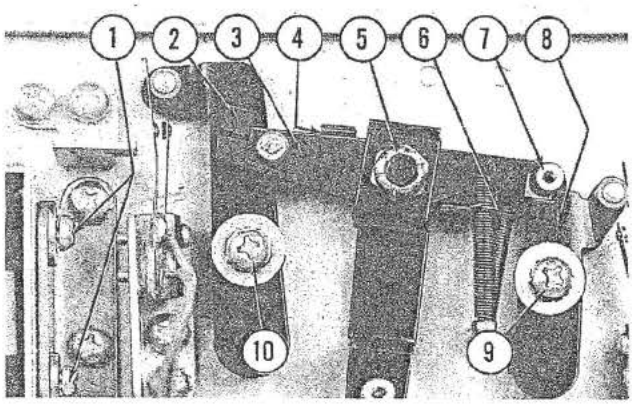

Fig. 28. RELEASE LEVER ADJUSTMENT

1.	Screws, Latch Solenoid Adjusting	
2.	Square Stud, Pawl Stud and Spacer Assembly, Letter	65009
3.	Trip Lever, Stud and Spacer Assembly, Letter	56714
4.	Dimension, 1/32"	
5.	Elastic Stop Nut	23879
6.	Dimension, 1/32"	
7.	Square Stud, Pawl and Spacer Assembly, Number	56712
8.	Trip Lever and Spacer Assembly, Number	65010
9.	Screw, Number Latch Adjusting	
10.	Screw, Letter Latch Adjusting	

d. RELEASE LEVER CLEARANCE ADJUSTMENT

Before attempting this adjustment, remove the latch solenoid control switch assembly (Fig. 29, Item 4). Loosen the latch solenoid adjusting screws (Fig. 28, Item 1). Manually hold the latch solenoid plunger in the actuated position with the plunger bottomed in the solenoid. Latch in a letter and a number button. Holding this condition, shift the latch solenoid on its mounting to provide a 1/32" clearance at the release tabs (Fig. 28, Items 4 and 6). Carefully maintain this setting and tighten the latch solenoid adjusting screws. This adjustment applies to all 2400 series.

e. CONTROL SWITCH ADJUSTMENT

Manually hold the latch solenoid plunger (Fig. 29, Item 1) in the actuated position. Loosen the adjusting screws (Item 5) and move the control switch and bracket to provide 1/32" to 1/16" opening of its normally closed contacts. The normally open contacts on the 2400 and 2410 models should close with a good wiping action.

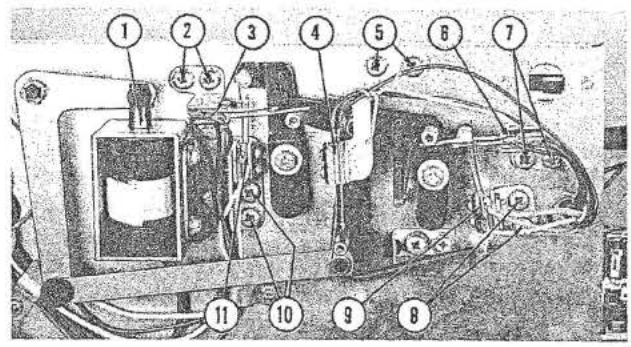

Fig. 29. CONTROL SWITCH ADJUSTMENT

1.	Plunger, Latch Solenoid	112104-1
2.	Screws, Letter Latch Switch Adjusting	
3.	Switch Assembly, Letter Latch	68247
4.	Switch Assembly, Control	65007
5.	Screws, Control Switch Mounting	
6.	Switch Assembly, Number Latch	68247
7.	Screws, Number Latch Switch Adjusting	
8.	Screws, Number Series Switch Adjusting	
9.	Switch Assembly, Number Series	66007
10.	Screws, Letter Series Switch Adjusting	
11.	Switch Assembly, Letter Series	111810

f. LETTER AND NUMBER LATCH SWITCH ADJUSTMENT

The latch switches are adjusted at the factory with all contacts normally open 1/32". When the latch solenoid coil is energized and a letter button is latched in, the letter latch switches should close with a 1/32" wiping action. Release the letter button by operating the "Release" button and latch in a number button. The number latch switch should close with a 1/32" wiping action. Should adjustment be required, the latch switch mounting brackets may be moved by loosening the mounting screws (Fig. 29, Items 2 & 7). This adjustment applies to all of the 2400 series.

g. LETTER AND NUMBER SERIES SWITCH ADJUSTMENT

The series switches are factory set to be normally closed with 30 to 40 grams contact pressure. With the latch solenoid plunger actuated and a letter selector button in its latched position, the

letter series switch (Fig. 29, Item 11) should have a contact opening of 1/32". The switch mounting screws (Item 10) may be loosened and the bracket moved to provide the proper adjustment. The number series switch (Item 9) may be adjusted in the same manner by loosening the mounting screws (Item 8). This adjustment applies to all of the 2400 series.

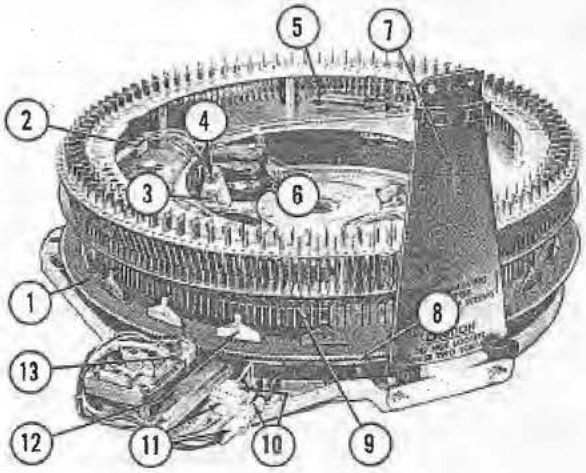

Fig. 30. ELECTRIC SELECTOR, 2400

1.	Rotating Plate and Rocker Assembly	111481
2.	Over-ride Switch Assembly (4)	65952
3.	Screw, Adjusting, Start Switch	
4.	Screw, Adjusting, Reverse Switch	
5.	Nylon Spacer, Wobble Ring (4)	68650
6.	Switch, Start, Micro	61596
7.	Silk Screen and Support Plate Assembly	68799
8.	Actuating Bar, Rocker Arm	
9.	Wobble Ring	67927
10.	Socket, 3 Circuit	111528
11.	Cap, 3 Circuit	111526
12.	Rocker Arm	67926
13.	Nylon Gear, Selector Motor	68717

4. ELECTRIC SELECTOR ADJUSTMENTS

a. ROTATING PLATE AND ROCKER ARM ADJUSTMENT

Rocker plate alignment on the 200 selection pin assembly is accomplished by adjusting the number quadrant's (Fig. 31, Item 1) forward stop screw (Item 4). Turn the power OFF, depress the number "0" solenoid plunger (Item 16) and turn the rotating plate and rocker arm assembly (Item 12) in a clockwise direction by turning the nylon gear (Item 18) of the selector drive motor. One of the 10 stop pins (Item 8) will engage the depressed plunger of the number "0" solenoid. Continued rotation of the nylon gear will drive the number quadrant (Item 1) until it rests against the forward stop screw (Item 4). In this position, the tips of the rocker arms (Fig. 30, Item 12) should be very slightly off center to the right, with the selector pins number "0" of each letter group A to V. Holding this position, check the letter solenoid plungers to see that they align with the rocker arm actuator bar (Fig. 30, Item 8). Repeat the above procedure using number "1" stop solenoid, rechecking the alignment of both the rocker arm tips and the actuator bars. Should adjustment be required, the stop screw (Fig. 31, Item 4) may be set to provide the correct alignment.

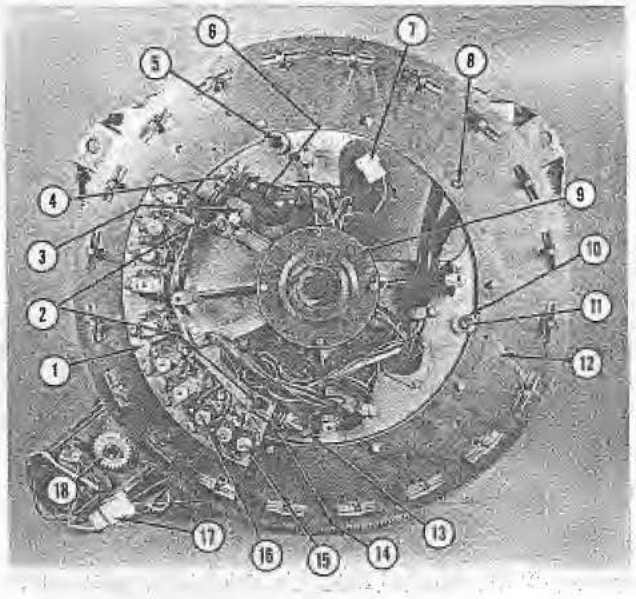

Fig. 31. ELECTRIC SELECTOR, 2400

1.	Mounting Casting Assembly, Number Quadrant	115915
2.	Shoulder Screw (3)	68649
3.	Screw, Adjusting, Reverse and Start Switches	73793-88
4.	Screw, Adjusting, Forward Stop	73793-122
5.	Stud	68657
6.	Micro Switch (2), Reverse and Start	110558
7.	Cap, 3 Circuit	111526
8.	Stop Pin, Rotary Plate and Rocker Arm Assembly (10)	115411
9.	Contact Plate Assembly	66186
10.	Retaining Ring	73724-31
11.	Stud, Eccentric	69659
12.	Rotating Plate and Rocker Arm Assembly	111481
13.	Screw, Adjusting, Back Stop	73793-122
14.	Spring, Quadrant Retracting	62773
15.	Solenoid, Selector Stop, Number 1	68804
16.	Solenoid, Selector Stop, Number 2-0	68617
17.	Socket, 3 Circuit	111526
18.	Nylon Gear, Motor and Gear Assembly	111913

b. START SWITCH ADJUSTMENT

The start switch (Fig. 30, Item 6) should be checked after any adjustment of the forward stop screw. It is actuated by the forward movement of the number quadrant. The actuating screw (Item 3) should be set to actuate the switch with 1/32" to 3/64" overtravel. The following method may be used to adjust the start switch. While manually holding the number coil quadrant in its forward stop position with the nylon drive gear, back out the start switch actuating screw until the switch actuates, then turn the screw in until the switch again actuates. Continue one full turn of the screw beyond the point of actuation.

c. BACK STOP SCREW ADJUSTMENT

The number quadrant (Fig. 31, Item 1) in its normal rest position is held against backstop screw (Item 13) by its retracting spring (Item 14). This adjusting screw should be set to provide 1/16" overtravel of the number quadrant (Item 1) after the start switch (Fig. 30, Item 6) resets on return of the number quadrant.

d. REVERSE SWITCH ADJUSTMENT

This adjustment should follow any adjustment of the back stop screw. While the number quadrant is in its normal rest position turn the adjusting screw (Fig. 30, Item 4) in until the reverse switch actuates. Then turn the adjusting screw (Item 4) out until the reverse switch resets. Turn the adjusting screw out an additional 1/2 to 1 turn for correct overtravel.

e. OVERRIDE SWITCH ADJUSTMENT

When a selector latch pin (Fig. 32, Item 1) is released the wobble ring (Item 7) is moved upward by the tension of the selector latch pin spring (Item 9). The spacer (Item 8) closes the contacts of one override switch. To check for correct switch action choose a selector pin midway between 2 spacers. Release the pin and slowly work the pin up and down. The override switch contacts at either side of the selector pin should close with good wiping action and allow the selector pin to make its full travel. Each pair of override switches should be checked using pins E-8, K-8, Q-8 and V-8. The override relay can be heard to operate and release as the switches make and break. The relay actuation and release should occur at approximately 1/3 the travel of the selector pin. Should adjustment be required it may be accomplished by forming the blades of the override switch with a suitable contact adjusting tool. The foregoing adjustment will apply to the 100 and 104 selector pin assembly although the override switches are mounted on the wobble plate.

(1) Pins number A-6, D-2, F-5 and H-10 should be used to check the override switches on the 100 selection pin assembly.

(2) Pins number A-20, A-23 and D-13 should be used to check the override switches on the 104 selection pin assembly.

f. ROTATING PLATE AND ROCKER ARM ADJUSTMENT - 2410S AND 2410

(1) The adjusting screws (Fig. 33, Item 8) should be loosened and the guide plate set to zero clearance with the stop bracket (Item 5) on the rocker plate assembly.

(2) The adjusting screw (Item 9) should be set to align the tips of the rocker arms (Fig. 35, Item 1) with the selector pins number 3, A through

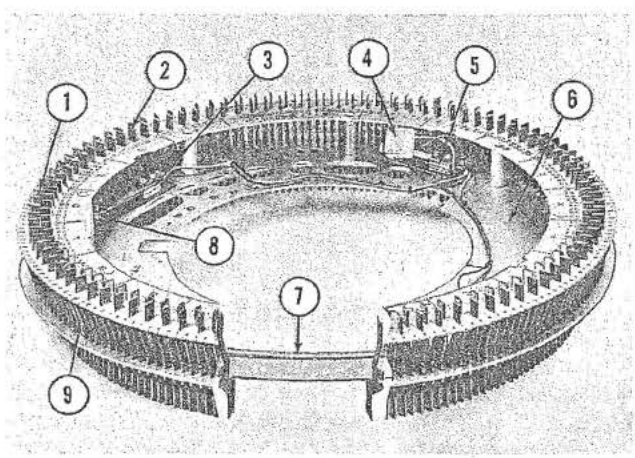

Fig. 32. SELECTOR PLATE AND LATCH PIN ASSEMBLY, 2400

1. Latch Pin, Outer (100)	110942
2. Latch Pin, Inner (100)	110941
3. Over-ride Switch (4)	65952
4. Housing, Female 111528, Male	111526
Contacts for housing	111527
5. Over Ride Switch	65952
6. Lower plate and Spacer Assembly	69492
7. Wobble Ring	67927
8. Spacer, Wobble Ring	68650
9. Spring, Latch Pin	110480

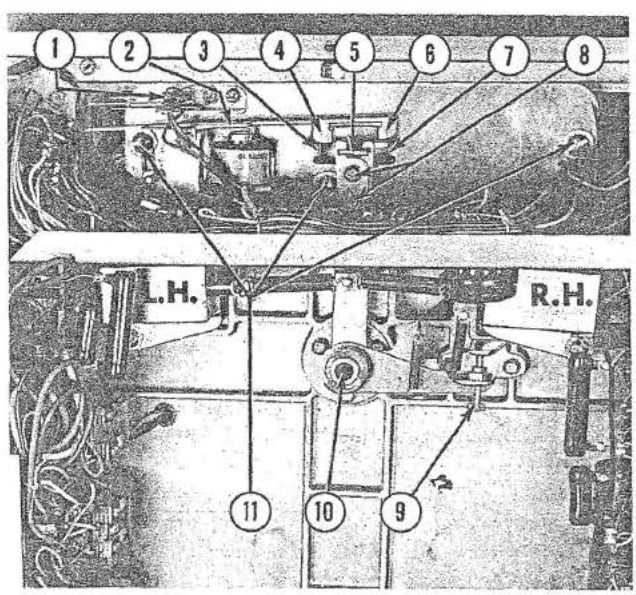

Fig. 33. ELECTRIC SELECTOR, 2410

1. Switch, Stop Magnet, Contact Assembly	115914
2. Armature, Stop Arm and Rivet Assembly	115862
3. Stop Position, L.H.	
4. Stop Tab, L.H.	
5. Stop Centering Yoke	115824
6. Stop Tab, R.H.	
7. Stop Position, R.H.	
8. Screw, Adjusting, 8-32 x 3/16", R.Hd. Sems	73533-33
9. Screw, Adjusting 8-32 x 7/8", Hex Hd.	73793-87
10. Centering Shaft and Plate Assembly	115812
11. Screws, Mounting (3)	73692-49

K and with the selector pins number 8, A through K. This is the normal rest position for the rocker plate assembly.

(3) Loosen the three mounting screws (Fig. 33, Item 11) and manually move the rocker plate until the stop bracket (Item 5) rests against the extreme right hand stop (Item 7). In this position the tips of the rocker arms (Fig. 35, Item 1) should align with the selector pins number 1, A through K and pins number 6, A through K. The mounting plate held by the screws (Item 11) may be moved to provide the correct alignment.

(4) Check the rocker arm alignment while holding the rocker plate in the extreme left hand stop position (Item 3). The tips of the rocker arms should be in alignment with selector pins number 5, A through K and pins number 0, A through K.

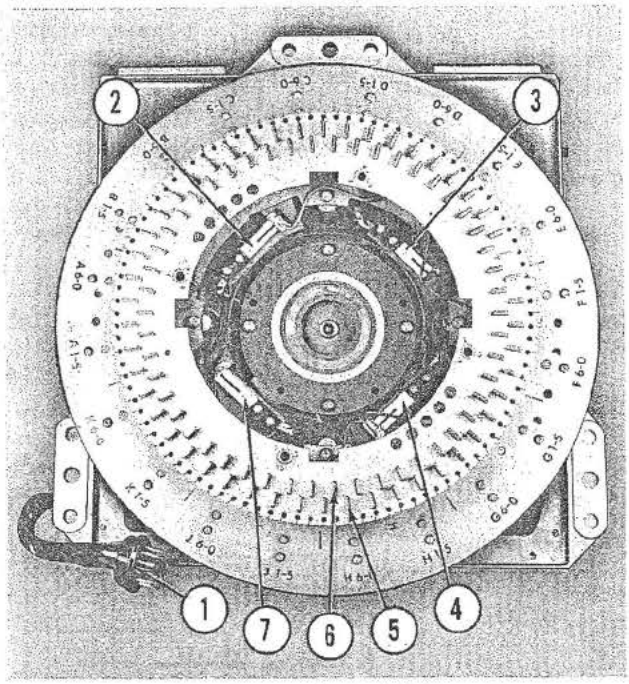

Fig. 34. ELECTRIC SELECTOR, 2410

1. Plug, 11 Prong	54878
2. Over-ride Switch, Contact Assembly	115918
3. Over-ride Switch, Contact Assembly	115918
4. Over-ride Switch, Contact Assembly	115918
5. Latch Pin, Selector, Outer (50)	115807
6. Latch Pin, Selector, Inner (50)	115806
7. Over Ride Switch, Contact Assembly	115918

(5) Check the right hand intermediate position by manually operating the stop magnet armature (Item 2) and moving the rocker plate to position the stop bracket (Item 5) against the armature stop (Item 6). In this position the tips of the rocker arms should align with the selector pins number 2, A through K and pins number 7, A through K. Should adjustment be required the armature plate stop tab (Item 6) may be formed.

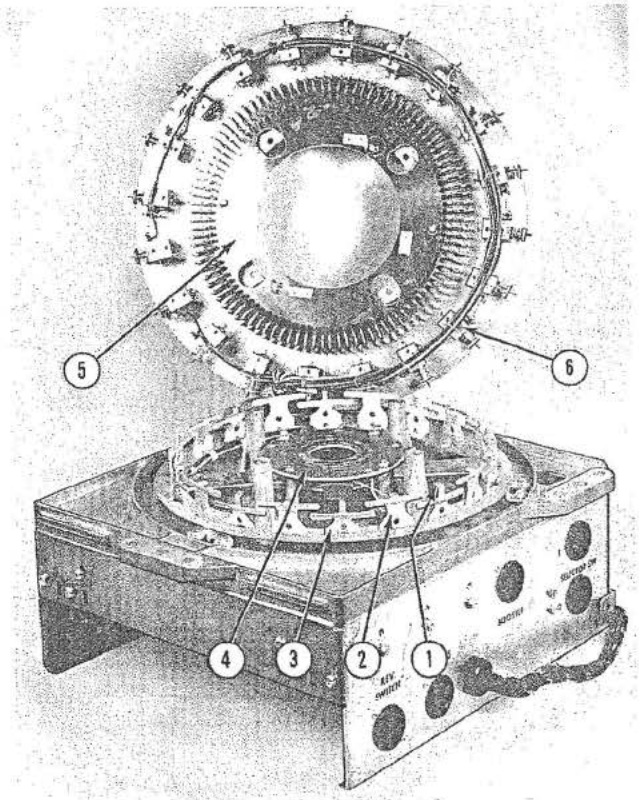

Fig. 35. ELECTRIC SELECTOR ASSEMBLY, 2410

1. Tip of Rocker Arm	
2. Rocker Arm, Long (10)	115788
3. Rocker Arm, Short (10)	64618
4. Contact Plate Assembly	66186
5. Wobble Plate	115796
6. Selector Solenoid (20)	64602

(6) The left hand intermediate stop position should be checked in the same manner as for the right hand. The stop bracket (Item 5) will be manually held against the intermediate stop on the stop magnet armature (Item 4). The rocker arm tips should align with the selector pins number 4, A through K and pins number 9, A through K. Should adjustment be required the stop tab on the armature plate (Item 4) may be formed.

g. STOP MAGNET SWITCH ADJUSTMENT

The stop magnet switch (Fig. 33, Item 1) should be set to provide a 1/32" gap at the normally open contacts and have a 1/32" wiping action when the switch is actuated. They should be adjusted to make before break.

h. ROTATING PLATE AND ROCKER ARM ADJUSTMENT - 2404

(1) The rocker plate is adjusted in its normal at rest position by loosening the 3 mounting screws (Fig. 36, Item 1) and shifting the stop coil assembly (Item 2) to locate the tips of the 26 rocker arms in alignment with the number 1 to 26 selector

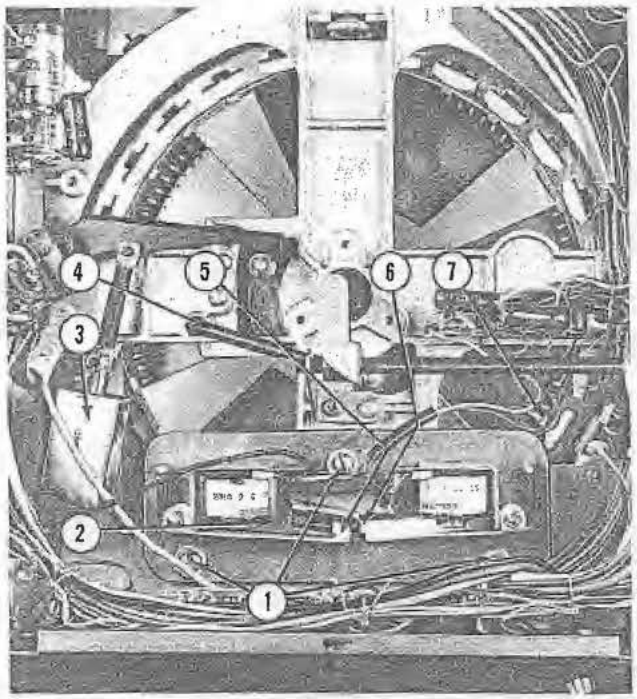

Fig. 36. ELECTRIC SELECTOR ASSEMBLY

1. Mounting Screws	
2. Mounting Plate and Magnet Assembly	64645
3. Solenoid, Driver	64722
4. Spring	64781
5. Stop Arm, L.H., "B" Setting	64654
6. Stop Arm, R.H., "C" Setting	64653
7. Rocker Arm Tip	

pins in the "A" group (Item 7). Manually move rocker plate to the limit of its travel and check the alignment of the tips of the rocker arms with 1 to 26 "D" selector pins. The stop coil mounting plate may be moved to obtain a satisfactory alignment at "A" and "D" positions.

(2) Manually operate "B" stop lever (Fig. 36, Item 5) and move the rocker plate to rest against the "B" stop (Item 5) and check the alignment of selector pins 1 to 26 in the "B" group with the tips of the rocker arms. Should adjustment be necessary the stop tab may be formed. Manually operate the "C" stop armature (Item 6) and move the rocker plate to the "C" stop position. The tips of the 26 rocker arms should align with the 26 pins in the "C" group. The stop tab on the "C" stop magnet armature may be formed if adjustment is required.

i. SELECTOR DRUM CENTERING

(1) Centering of the 200 selection electric selector assembly must be carefully done whenever the selector pin assembly is removed from the mechanism. The assembly is held in position by two mounting screws (Fig. 37, Item 6) and by the mounting plate (Fig. 30, Item 7) at the rear of the assembly. Observe the caution label on the rear plate and remove only the upper two screws.

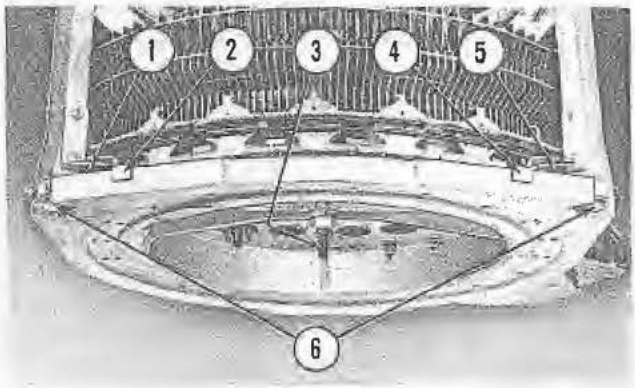

Fig. 37. ELECTRIC SELECTOR CENTERING

1. Guide Plate, L.H.	68757
2. Guide Bracket, L.H.	68759
3. Centering Shaft	69247
4. Guide Bracket, R.H.	68760
5. Guide Plate, R.H.	68758
6. Mounting Screws (2)	

The front edge of the casting is provided with two guide brackets (Fig. 37, Item 2 & 4) which fit over two guide plates (Item 1 & 5) on the front hangers. The engagement of these brackets serves to support the front of the selector pin assembly while the rear mounting plate is securely fastened by its upper screws. Centering shaft #69247 (Item 3) shipped with each phonograph, should be inserted through the center bushing and into the main selector shaft. The 2 front mounting screws (Item 6) should be turned in by hand until the selector pin assembly is in contact with the front hangers. While in this condition the selector pin assembly should be positioned so that the centering pin slides in and out of the main shaft freely. Maintaining this alignment the front screws should be tightened. Carefully check the selector crank arm adjustments and check for correct selections.

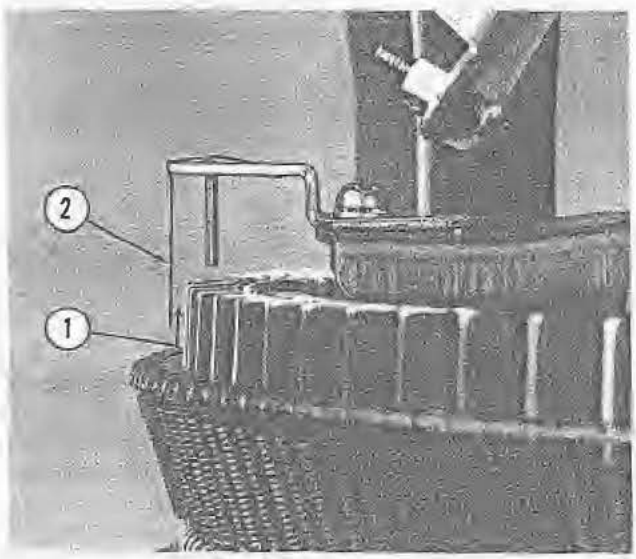

Fig. 38. ELECTRIC SELECTOR CENTERING

1. Uniform Clearance at all Points	
2. Centering Clip	117006

j. Centering of the 100 selection selector pin assembly normally is not required if the original assembly is retained with its changer. The mounting is the same as the 104 assembly. However where selector pin assemblies are interchanged on the 100 selection changer the guide plates, one of which is shown in Figure 39, Item 3, should be loosened. The assembly loosely mounted on the three studs and centering shaft #69247 inserted through the center bushing (Fig. 33, Item 10) into the main shaft. Tighten the guide plate retaining screws and the three mounting screws. Remove the centering shaft and check the selector crank arm adjustments and for correct selections.

(1) Centering clip 117006 may be used as shown in Figure 38, Item 2 of the 200 selector assembly where centering shaft #69247 is not available.

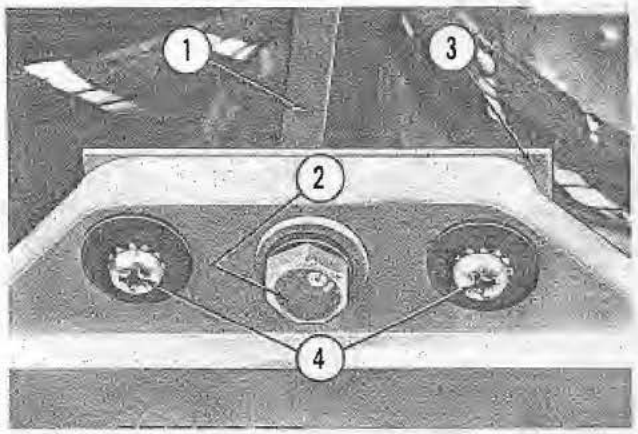

Fig. 39. GUIDE PLATES AND MOUNTING

1. Stud, Mounting, Selector (3)	64543
2. Selector Pin Assembly Mounting Screw (3)	73793-150
3. Guide, Alignment (3)	61850
4. Alignment Plate Retaining Screws, 8-32 x 3/4", R.H.	73533-40

k. Centering of the 104 selector pin assembly has been carefully done at the factory and if the original assembly is kept with its changer it will not need recentering provided the alignment plates, one of which is shown in Figure 39, Item 3, are not disturbed. The assembly may be easily removed by disengaging all cable plugs and removing 3 mounting screws (Item 2). The screws (Item 4) should not be loosened. However, if a selector pin assembly should be mounted on another changer the alignment plates must be loosened. The pin assembly should be loosely mounted on the 3 studs and the centering clip (Fig. 40, Item 2) snapped in place on the selector crank arm (Item 1). Shift the pin assembly on its mounting studs to obtain a uniform clearance between the centering clip and all selector pins (Item 3). Tighten the alignment plate retaining screws and the mounting screws. Check the selector crank arm adjustments and for correct selection.

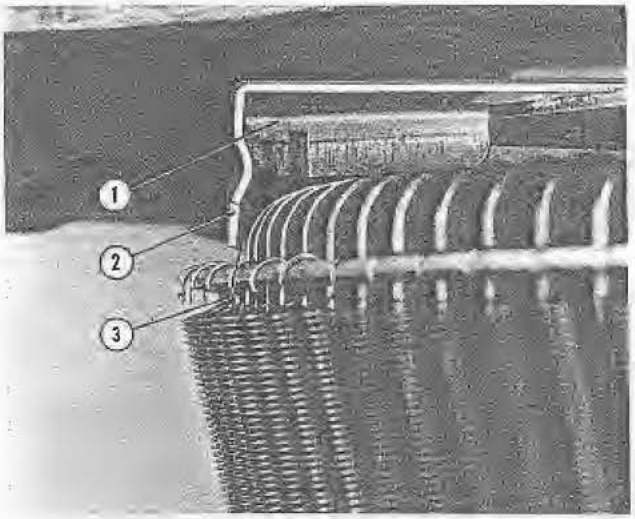

Fig. 40. ELECTRIC SELECTOR CENTERING

1. Selector Crank	59519
2. Centering Clip	61672-6
3. Uniform Clearance at all Points	

5. RECORD CHANGER ADJUSTMENTS

a. SELECTOR CRANK ARM CLEARANCE ADJUSTMENT - 2400 - 2410

(1) Both tip and bracket assemblies at the ends of the selector crank arms on the 200 and the 100 selector crank arm assemblies should clear the tips of the selector latch pins in their latched position by 1/16" (Fig. 41, Item 1) as the crank arms are rotated. To vary this dimension the screw (Fig. 41, Item 5) may be adjusted. The 100 selection changer has this adjusting screw in the same location but is adjustable from the top end instead of the lower end.

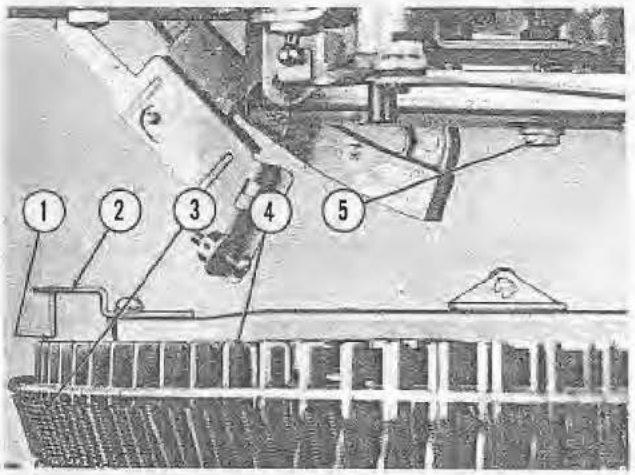

Fig. 41. SELECTOR CRANK CLEARANCE ADJUSTMENT, 2400, 2410

1. Dimension, 1/16"	
2. Tip and Mounting Bracket Assembly, Outer	110930
3. Spring, Latch Pins	110480
4. Latch Pin, Outer	110942
5. Screw, Crank Arm Clearance Adjustment	73793-124

b. SELECTOR CRANK ARM CLEARANCE ADJUSTMENT - 2404

This adjustment is made by turning the adjusting screw (Fig. 42, Item 3) to provide 1/32" clearance (Item 1) between the crank arm and the selector pins in their latched position.

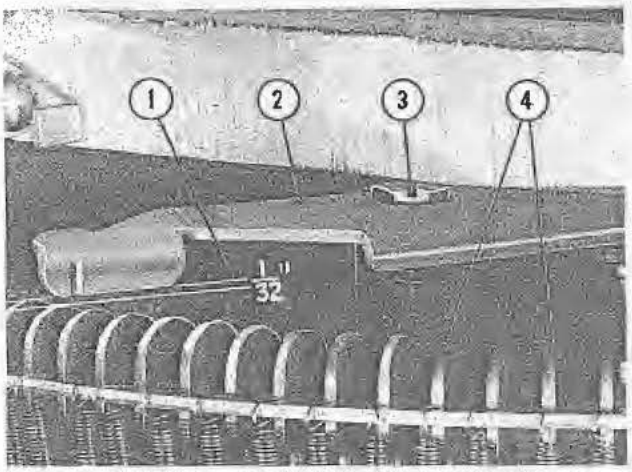

Fig. 42. SELECTOR CRANK ARM CLEARANCE ADJUSTMENT

1. Dimension, 1/32" to 1/16"	
2. Selector Crank	59519
3. Adjusting Screw	73790-139
4. Selector Pins	64606

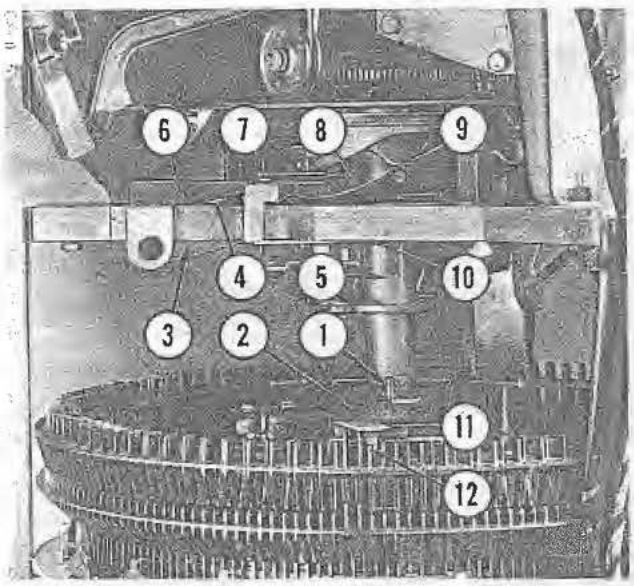

Fig. 43. CANCEL LEVER ADJUSTMENT, 2400

1. Actuator Arm and Link Assembly	110939
2. Selector Crank and Stop Nut Assembly	110943
3. Cancel Arm, Lower Assembly	59661
4. Spring	110934
5. Sleeve and Bushing Assembly	68483
6. Cancel Lever, Hub and Roller Assembly	59513
7. Adjusting Screw, Cancel Lever, 10-32 x 1-3/4"	73793-125
8. Dimension, 1/32" Over travel	
9. Point of Maximum Actuation	
10. Cancel Arm, Lower Assembly	59661
11. Tip and Mounting Bracket, Outer	110930
12. Point of Engagement, Tip and Latch Pin	

c. CANCEL ARM ADJUSTMENT 2400 - 2410

With a selector latch pin released and the tip of the selector crank arm engaged with the released latch pin (Fig. 43, Item 12), advance the mechanism in its cycle until the peak of the cancel lobe on the main cam (Item 9) has depressed the cancel lever to its maximum stroke. In this position the selector latch pin should be reset with a 1/32" clearance under the head of the adjusting screw (Item 8).

d. CANCEL ARM ADJUSTMENT - 2404

The adjusting screw (Fig. 44, Item 5) should be adjusted with the mechanism in its normal rest position to provide 1/8" to 5/32" between the tips of the lower cancel arm (Fig. 44, Item 1) and the shoulder of the cancel sleeve (Item 2). The retracting spring (Fig. 44, Item 4) should be holding the roller of the cam follower (Fig. 45, Item 6) against the surface of the cancel cam.

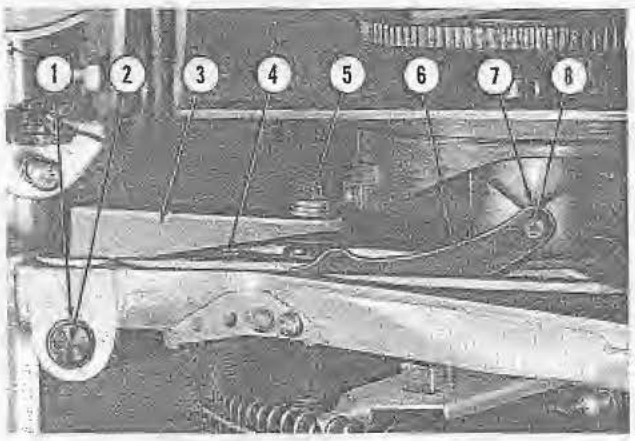

Fig. 44. CANCEL LEVER ADJUSTMENT, 2404

1. Retaining Ring	73728-50
2. Shaft, Cancel Arm	59640
3. Upper Cancel Arm Casting	59631
4. Spring, Cancel Arm Return	110934
5. Adjusting Screw 10-32 x 1-3/4" Hex Hd.	73793-125
6. Cancel Lever, Hub and Roller Assembly	59513
7. Cancel Position of Main Cam	
8. Roller and Shaft Assembly	59485

e. RECORD LIFT ARM RETRACTED ADJUSTMENT

The record lift arms are driven down by a lobe on the main cam driving against the roller on the roller shaft, link and lever assembly (Fig. 46, Item 5). In their down position both lift arms should bear lightly against their lower stop brackets with approximately 1/4" clearance between the lower edge of the record carrier separators and the top edge of the guide tips on the upper end of the lift arms. Should adjustment be required check that the mechanism is in normal rest position. Loosen the set screw (Fig. 46, Item 4), loosen the lock nut

(Item 3), turn the adjusting screw (Item 2) until the arms rest lightly against the lower stop brackets. Tighten the locknut and set screw. Recheck the arms for the required position.

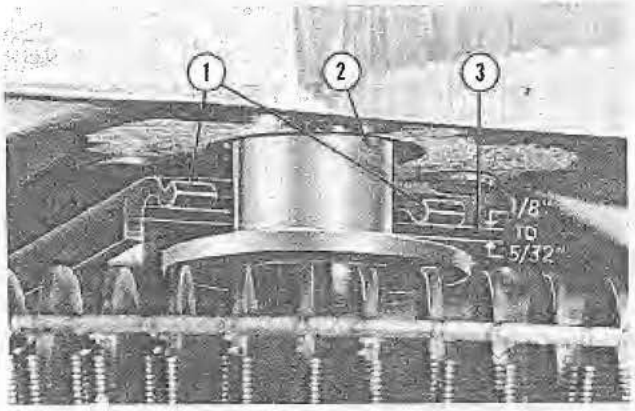

Fig. 45. CANCEL LEVER ADJUSTMENT, 2404

1. Cancel Arm, Lower Assembly	59661
2. Sleeve	59657
3. Dimension, 1/8" to 5/32"	

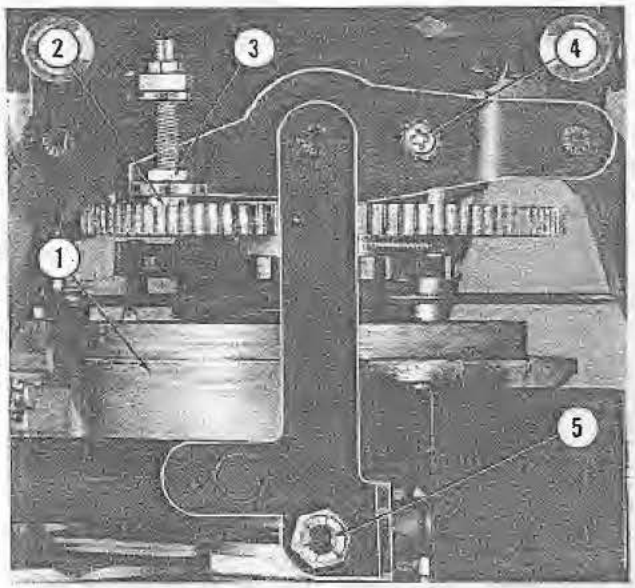

Fig. 46. RECORD LIFT ARM RETRACTING ADJUSTMENT

1. Main Cam	62792
2. Adjusting Screw 10-32 Hex Hd.	73660-161
3. Lock Nut	73785
4. Lock Screw	73533-34
5. Roller Shaft, Link and Lever Assembly	59599

f. ROLLER GUIDES - RECORD LIFT ARMS - 2400

(1) The roller guides for the record lift arm spring loaded guide tips are mounted on top of the chassis mounting plate. When the arms are down the guide tips are held straight in line and centered between the guide rollers. The adjustable bearing (Fig. 47, Item 11) should be set to provide .003" to .006" clearance between the guide tips and the rollers. Advance the mechanism in its cycle and allow the lift arm to travel to a position where the guide tips are out of the record separators. Stop the mechanism at this point and measure the opening between the guide tips (Fig. 48, Item 1). The inside dimension should be 7/16".

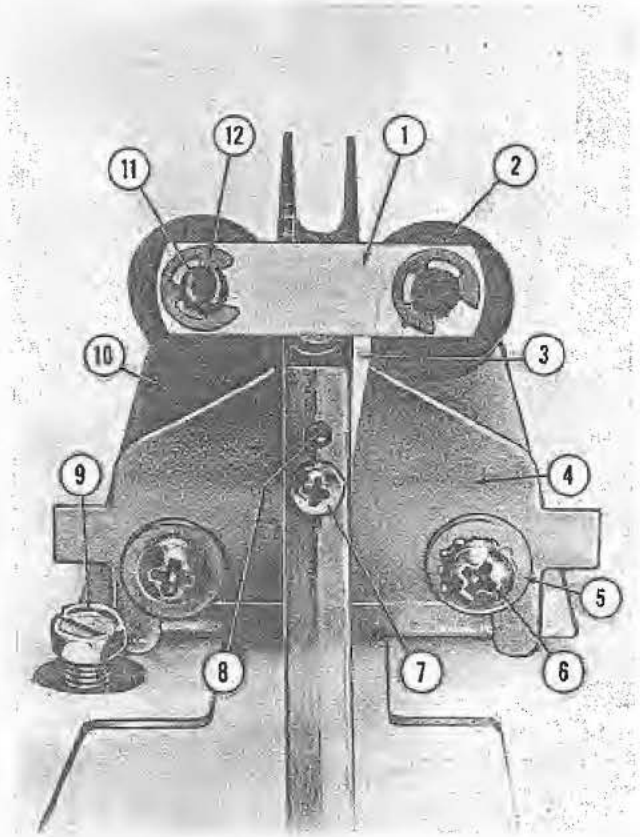

Fig. 47. BRACKET AND ROLLER ASSEMBLY, LIFT ARM GUIDE, 2400

1. Strap	65940
2. Spacer	65942
3. Guide Plate, Record Lift Arm	68290
4. Plate, Lift Arm Guide	66182
5. Washer	54024
6. Screw, 8-32 x 1/4", R. Hd.	73533-34
7. Screw, 4-40 x 5/8", R. Hd.	73533-7
8. Roll Pin	73782-32
9. Screw, Lift Arm Centering Adjustment	73660-161
10. Mounting Bracket, Hub and Pin Assembly	116836
11. Stud, Eccentric Adjustment	116831
12. Retaining Ring	73724-25

(2) ADJUSTABLE PLATE SETTING

The adjustable plate (Fig. 47, Item 4) should be located with the slot centered between the guide rollers. Advance the mechanism in its cycle until the lift arms are free to raise and lower. The guide tip bearing pin must enter and leave the slotted guide plate (Item 4) with no bind and the tips should stand straight entering the record holder. The guide tips spread evenly as they leave the guide rollers. Should they run off to one side they may be straightened by loosening the retaining screw (Item 7) and moving stop bracket (Fig. 48, Item 5).

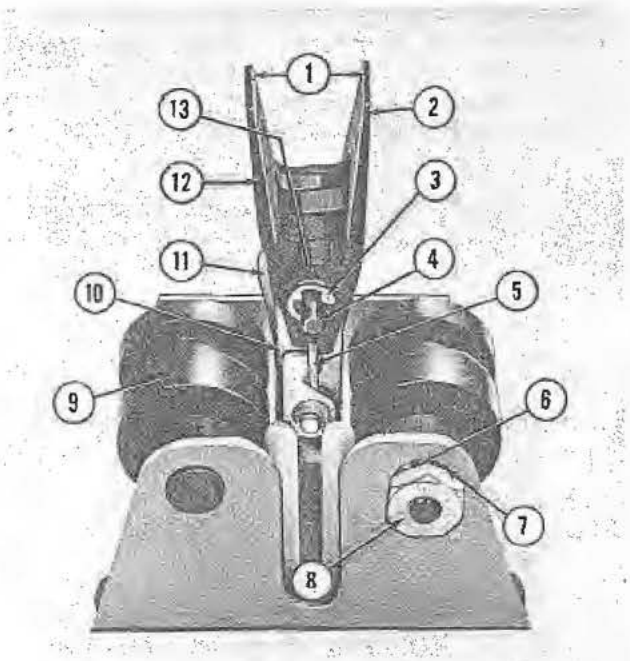

Fig. 48. BRACKET AND ROLLER ASSEMBLY, LIFT ARM GUIDE, 2400

1.	Dimension, 7/16"	
2.	Guide Tip, Right Hand	65730
3.	Retaining Ring	73724-9
4.	Shaft	65938
5.	Stop, Guide Tip	65526
6.	Washer	54024
7.	Lock Washer	73605-5
8.	Nut	73601-6
9.	Roller (2)	116833
10.	Spring, Record Lift Arm Tips	65812
11.	Guide Plate	68290
12.	Guide Tip, Left Hand	65731
13.	Washer	65937

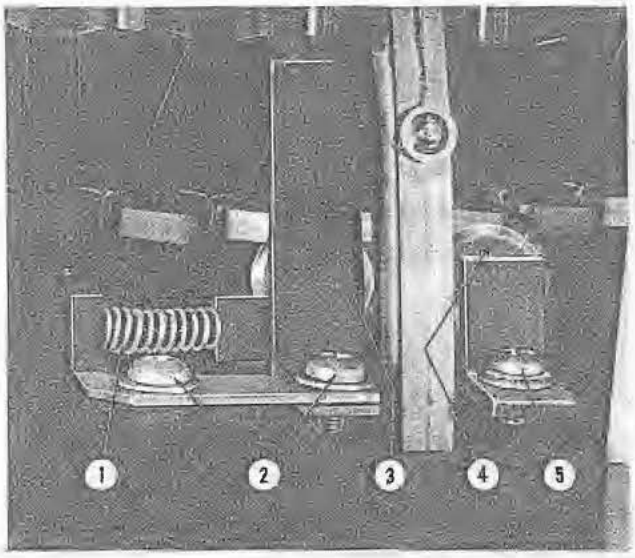

Fig. 49. ROLLER GUIDE ADJUSTMENT, 2410, 2404 LIFT ARMS

1.	Spring	60677
2.	Adjusting Screws	73568-106
3.	Mounting Bracket and Roller Assembly	60658
4.	Bracket and Roller Assembly	59704
5.	Mounting Screw	73676-47

g. RECORD LIFT ARM BRACKET AND ROLLER ASSEMBLY

The bracket and roller assemblies are mounted and located with a locating fixture at the factory after which scribe marks are made around the bracket. The scribe marks will be a guide in relocating the bracket should it be moved for any reason.

h. ROLLER GUIDES - LIFT ARMS 2410 AND 2404 SELECTOR

The stationary guide roller (Fig. 49, Item 4) should be set so that the roller rides squarely against the lift arm. The spring loaded roller should be set to allow smooth free travel of the lift arm up and down between the rollers.

i. RECORD LIFT ARM HEIGHT ADJUSTMENT ADJUSTMENT

The record lift arm height adjustment may be made by stopping the mechanism in play position with a normal size record (6-7/8" diameter) clamped on the turntable. Back out the adjusting screw (Fig. 50, Item 2) until the lift arm drags on the edge of the record. Make a scribe mark on the screw head and turn the screw in four full turns. The clearance between the edge of the record and the end of the record lift arm should be 3/32". Both lift arms should be checked.

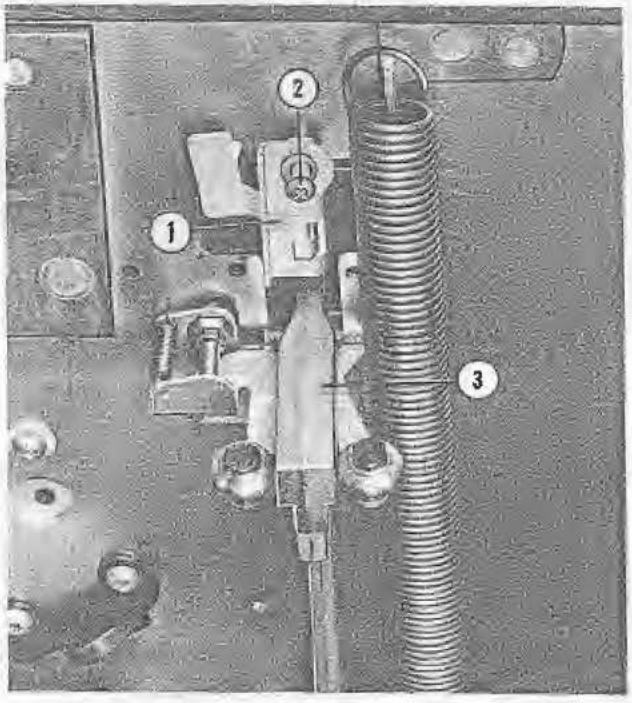

Fig. 50. LIFT ARM HEIGHT ADJUSTMENT

1.	Bracket and Nut Assembly	113205
2.	Adjusting Screw	73503-91
3.	Record Lift Arm, L.H.	65487

j. RECORD TRACK STOP BRACKET ADJUSTMENT

The record track stop adjustment may be made by stopping the mechanism in its play position with the normal size record clamped on the turntable. Loosen the bracket mounting screws (Fig. 51, Item 3) and insert a nickel between the flipper (record track) (Item 5) and the stop bracket (Item 2). Slide the bracket back until the flipper just touches the edge of the record. Tighten the screws and remove the nickel. Both stop brackets should be similarly adjusted.

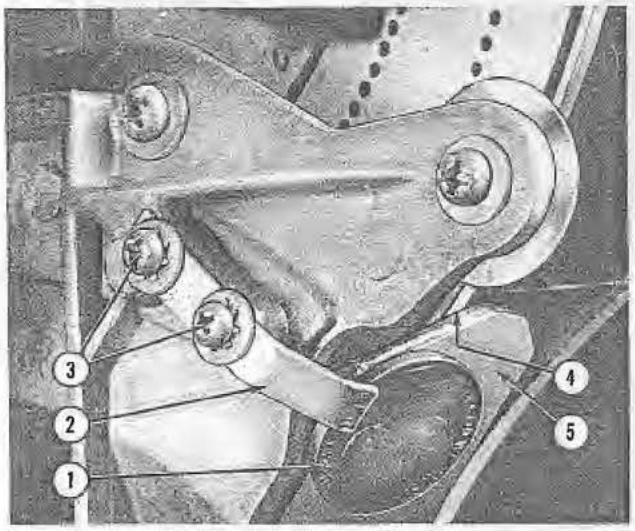

Fig. 51. RECORD TRACK STOP BRACKET ADJUSTMENT

1. Gauge, Nickel	
2. Stop Bracket	59434
3. Adjusting Screw 4-40 x 5/16", R.Hd.	73533-3
4. Point of Contact	
5. Record Track, Flipper	59425

k. RECORD LIFT ARM CENTERING ADJUSTMENT

The record lift arms on the 200 selector mechanism differ from those on the 100 or 104 mechanism in that they run free of the guide rollers until the arms are nearly at maximum height, at which time the ramp on the lower end of the arms contacts the adjustable guide roller bracket on the under side of the chassis (Fig. 52, Item 1 & 3). The ramp should enter and leave the rollers freely, with a clearance of .005" maximum. This dimension may be adjusted while the lift arm is in its play position by loosening the locking screw in the eccentric stud (Item 2) and turning the stud to the correct clearance and tightening the screw. With the mechanism still in its play position clamp a flat record on the turntable and check the alignment of the record with the record lift arm (Fig. 53, Item 4). Should adjustment be required, turning the adjusting screw (Fig. 52, Item 6) will center the lift arm with the record. The 100 and 104 mechanism lift arms are in contact with the guide rollers at all times. The above alignment has been factory set by forming and should need no adjustment.

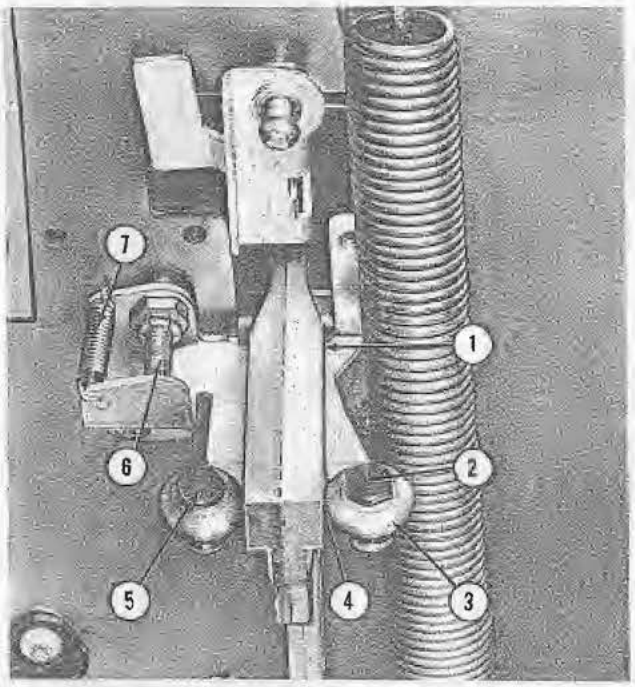

Fig. 52. LIFT ARM CENTERING, 2400

1. Ramp, Record Lift Arm	
2. Stud, Eccentric Adjustment	65986
3. Roller (2)	65989
4. Clearance, .005"	
5. Shoulder Rivet	65985
6. Screw, Lift Arm Centering Adjustment	73660-161
7. Spring	65958

l. BACK STOP PAWL ADJUSTMENT, 2400

The two back stop pawls are located on top of the chassis mounting plate to the right and left of center at the rear. Each of the back stop pawls will be adjusted independently. However, the adjustment procedure will be the same in both cases. Before proceeding with adjustment of the back stop pawls, the record changer should, otherwise, be in good running order.

(1) Slightly loosen the two mounting screws (Fig. 58, Item 2).

(2) Turn the record carrier slowly until the center line of one of the record compartments is in accurate alignment with the left hand record lift arm as shown in Figure 54. Carefully maintain this condition of alignment and set the left hand back stop pawl to engage with the adjacent tooth of the index wheel. The depth of engagement should be 1/32" to 1/16" as shown in Figure 58. Tighten the mounting screws. Alignment of the record compartments with the record lift arms must be kept within a tolerance of 1/32".

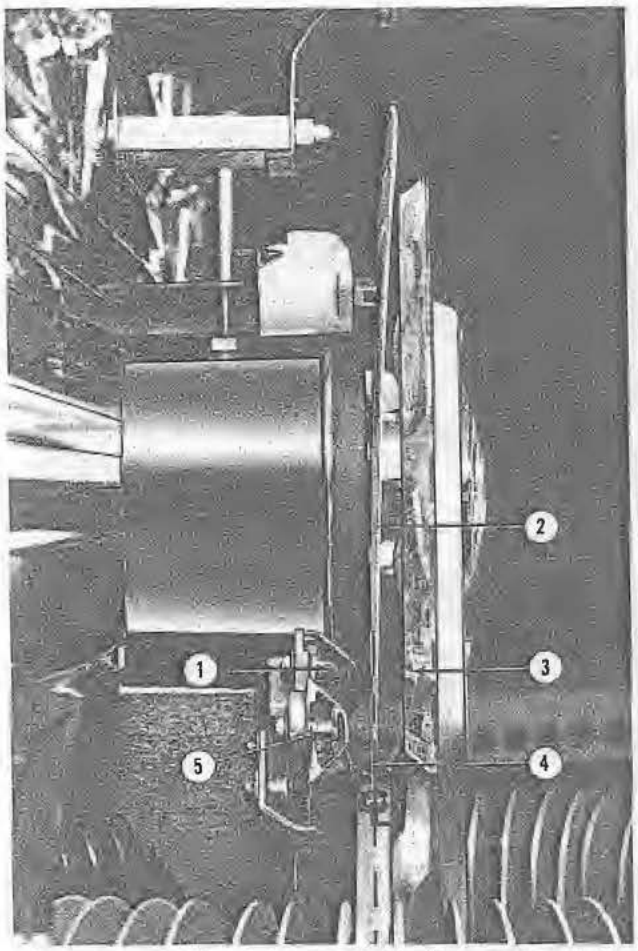

Fig. 53. RECORD LIFT ARM CENTERING ADJUSTMENTS

1. Bumper, Inner, Record Guide	59396
2. Record Disc, on Turntable	
3. Record Guide Plate	111044
4. Center Line, Record Lift Arm	
5. Bumper, Outer, Record Guide, Re-designed	117254

(3) The right hand back stop pawl should be set in the same manner as stated in steps (1) and (2) above.

(4) The same procedure will be followed to adjust the back stop pawls on the 2410.

(5) The back stop pawls on the 2404 are located at the front of the chassis mounting plate to the left and right of the center. The adjustment procedure will be the same as described for the 2400. Figure 56 shows one compartment of the record carrier located on the center line with the left hand record lift arm. This alignment should be checked at eight sectors of the record carrier.

NOTE:

Whenever back stop pawls are readjusted the selector crank arm adjustments must be checked for correct operation.

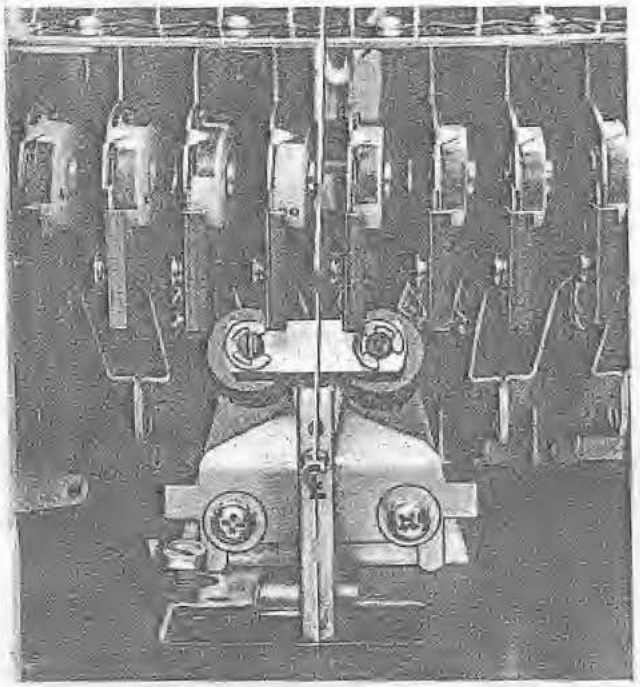

Fig. 54. CENTER LINE FOR BACK STOP PAWL SETTING

m. ACTUATING SCREW, PLUNGER RELEASE ADJUSTMENT, 2404

(1) Turn the power off.

(2) Make sure that the reversing switch actuating plunger is latched in its down position by manually depressing the upper cancel arm (Fig. 44, Item 6).

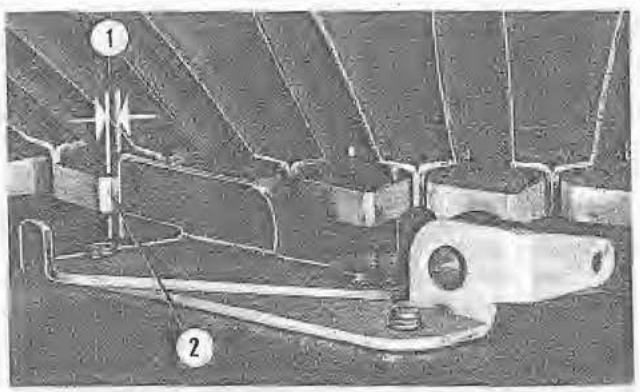

Fig. 55. BACK STOP PAWL DEPTH ENGAGEMENT

1. Dimension 1/32" to 1/16", Tip of Tooth to Face of Pawl
2. Tip of Tooth

(3) Release an odd number selector pin for the left hand back stop pawl. The selector pin chosen should stop the selector crank in a convenient position for adjustment.

(4) Turn the record carrier slowly by hand until the selector crank arm just touches the released pin.

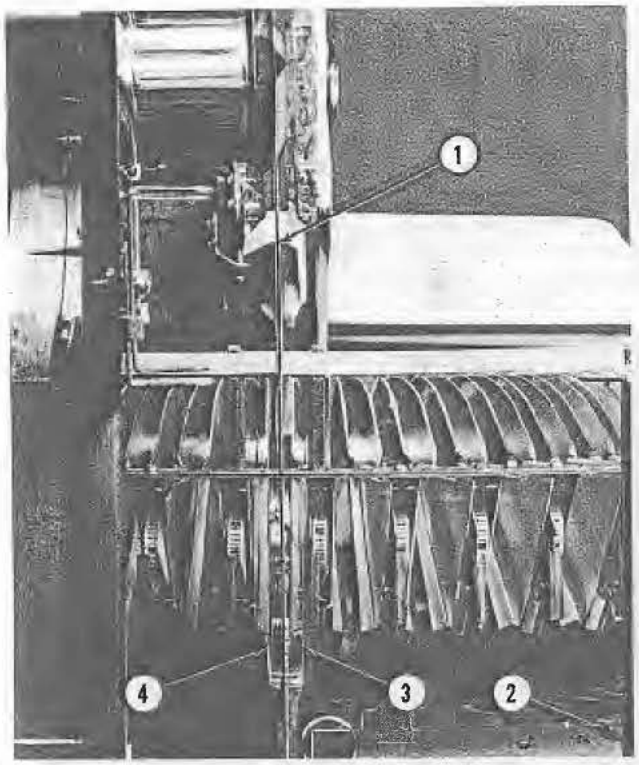

Fig. 56. CENTER LINE FOR BACK STOP PAWL SETTING

1. Center Line
2. Mounting Screws 73676-46
3. Guide Tip, L.H., Record Lift Arm 60711
4. Guide Tip, R.H., Record Lift Arm 61484

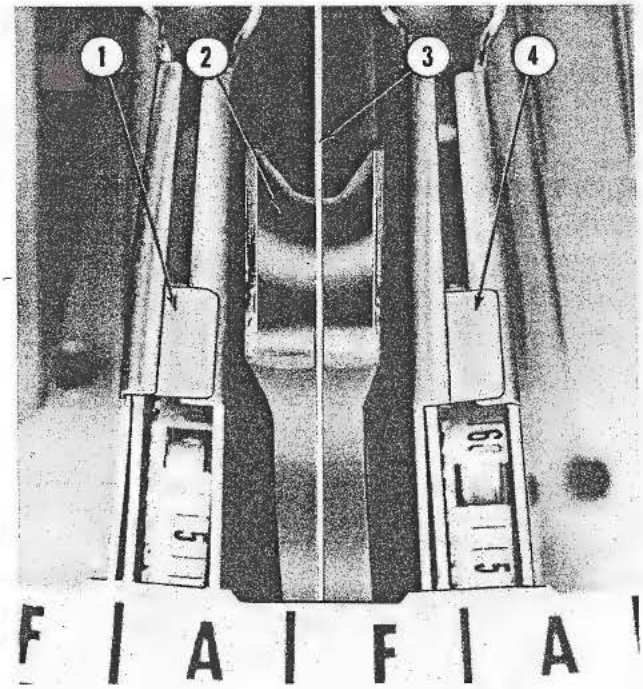

Fig. 57. ALTERNATE POSITION, RECORD LIFT ARM, FOR BACK STOP PAWL SETTING, 2410, 2404

1. Record Holder Assembly 59601
2. Arm, Record Actuator 59635
3. Center Line
4. Record Holder Assembly 59601

(5) Adjust the actuating screw (Fig. 59, Item 2) so that the plunger latch releases the reversing switch plunger when the correct tooth, as selected, has overtraveled the back stop pawl a distance of 1/16" to 3/32" (Fig. 58, Item 1).

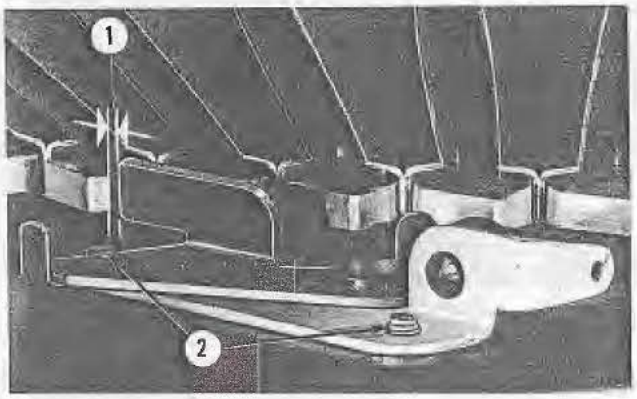

Fig. 58. BACK STOP PAWL OVER-TRAVEL

1. Dimension 1/16" to 1/32" Over-travel
2. Mounting Screws, Back Stop Pawl 73676-46

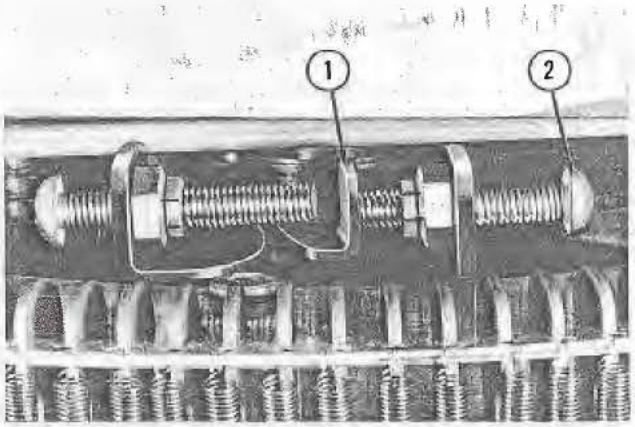

Fig. 59. PLUNGER RELEASE, ACTUATING SCREW ADJUSTMENT

1. Plunger, Release Arm 59572
2. Actuating Screw, Plunger Latch 73502-95

(6) Re-latch the reversing switch plunger by pressing down on the upper cancel arm (Fig. 44, Item 6) and release an even number selector pin to check the right hand back stop pawl. Check the position of the record carrier when plunger release occurs, in the same manner as described above.

(7) The timing between plunger release and back stop pawl engagement should be checked in eight different sectors of the record carrier. If the plunger release occurs too early, before the back stop pawl has engaged the correct tooth on the index wheel, it will result in wrong selections. If the plunger release occurs too late it may result in wrong selections by driving the index wheel far enough to engage the wrong back stop pawl and bind the selector crank arm against the selector pin. This may also cause the same selection to repeat.

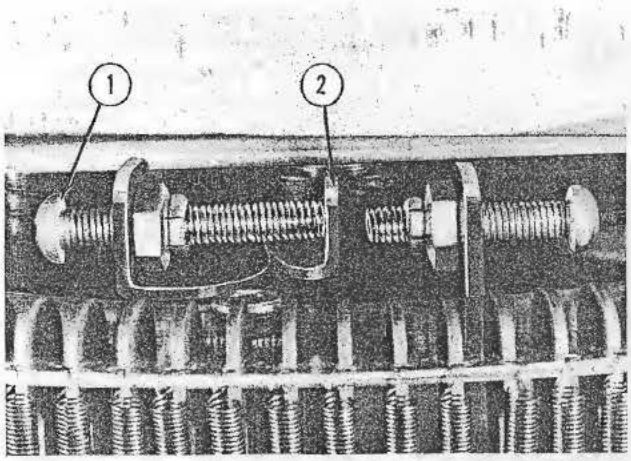

Fig. 60. STOP SCREW ADJUSTMENT, PLUNGER RELEASE ARM

1. Adjusting Screw, Latch Stop 73502-97
2. Stop Tab, Plunger Release Arm

n. STOP SCREW ADJUSTMENT, PLUNGER LATCH LEVER, 2404

Make sure that the reverse switch latch plunger is in its latched position by pressing down on the upper cancel arm (Fig. 44, Item 6). Turn in the stop screw (Fig. 60, Item 1) until it touches the latch lever (Item 2). Hold the plunger latch lever against the stop screw while turning the screw out until the plunger is released. Turn the screw out an additional 1/2 turn for overtravel. Check this adjustment by releasing an odd number selector pin. Manually turn the record carrier until the selector crank arm engages the released pin and releases the latch plunger. Continue rotating the record carrier by manually turning the changer motor shaft clockwise until the plunger latch lever (Fig. 60, Item 2) is held firmly against the stop screw (Item 1) by the actuating screw. The overtravel between the left hand back stop pawl and the correct tooth on the index wheel should be 3/16" maximum.

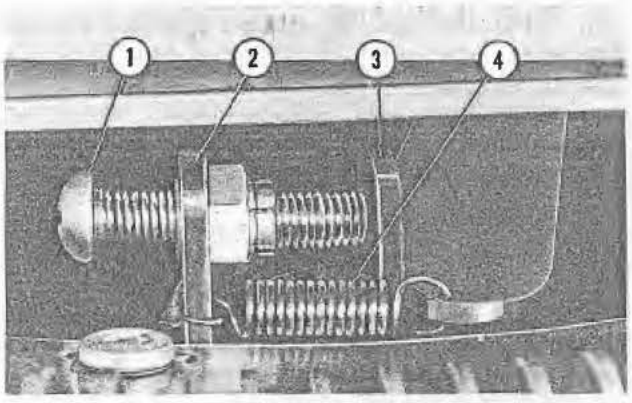

Fig. 61. KICK-OFF SCREW ADJUSTMENT

1. Adjusting Screw 73502-95
2. Adjusting Bracket and Stop Nut Assembly 59521
3. Adjusting Bracket, Selector Crank 59522
4. Spring, Retracting 59614

o. KICK-OFF SCREW ADJUSTMENT, 2404

The adjusting screw (Fig. 61, Item 1) for centering of the selector crank arm is mounted on the end of the "adjusting bracket and stop nut assembly" opposite the plunger latch stop screw and actuating screw. This screw provides adjustment of the selector crank "at rest" position, to avoid interference with the release of adjacent selector pins (Fig. 62, Item 2).

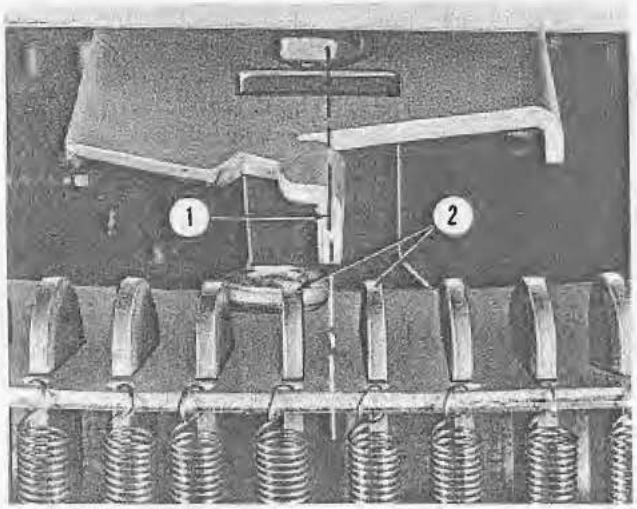

Fig. 62. SELECTOR CRANK ARM CENTERING

1. Center Line
2. Selector Pins 64606

(1) With the plunger latched in its "down" position, release any convenient selector pin.

(2) Turn the record carrier slowly, by hand, until the selector crank is stopped by the released pin and the reversing switch plunger is released.

(3) Make sure the corresponding tooth of the record carrier engages its backstop pawl at this point, and is held firmly against it.

(4) Cancel the selected pin by pressing down on the cancel lever (Fig. 44, Item 6).

(5) Adjust the selector crank kick off screw (Fig. 61, Item 1) so that the tip of the crank arm rests midway between selector pins.

p. ACTUATING SCREW ADJUSTMENT, CARRIAGE SWITCH, 2400, 2410

The 2400 and 2410 electric selectors use a reversing relay instead of two mechanically operated micro switches to reverse the changer motor. Therefore, the timing of the reverse relay will be controlled by the closing of the carriage switch (Fig. 63, Item 2).

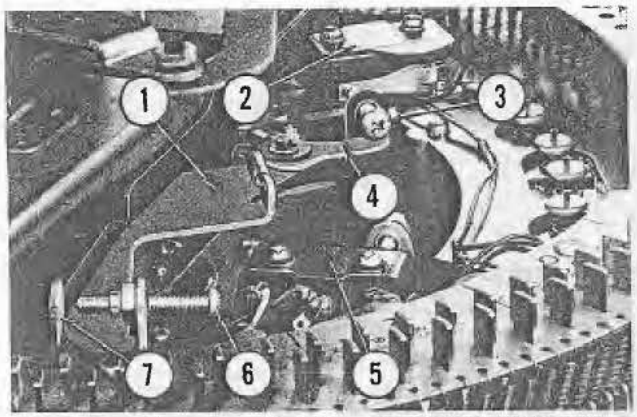

Fig. 63. ACTUATING SCREW ADJUSTMENT, CARRIAGE SWITCH

1. Selector Shaft and Adjusting Plate Assembly	115669
2. Carriage Switch	110557
3. Screw, Carriage Switch Adjusting	73502-95
4. Switch Lever and Stop Nut Assembly	110937
5. Reverse Switch	61596
6. Screw, Selector Crank Stop Adjustment	73503-95
7. Stop Tab, Selector Crank (See Item 1)	

(1) Proceed as on the 2404 by turning the service switch OFF, release an odd number (inner) selector pin, rotate the record carrier until the selector crank arm engages the released pin (Fig. 64, Items 4 & 12). As viewed from the rear, manually turn the changer motor shaft clockwise until the reversing relay is heard to operate, at which point the right hand back stop pawl at the rear of the chassis mounting plate should have just dropped into engagement with a tooth on the index wheel. Allow overtravel of 1/32" maximum (Fig. 58, Item 1). Check this adjustment at twelve positions around the pin assembly using inner odd number pins. At no point should there be more than 1/32" overtravel of the index wheel tooth past the back stop pawl at the moment the reverse relay operates.

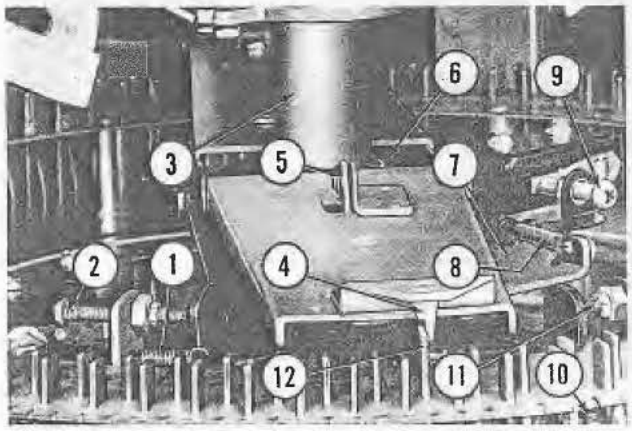

Fig. 64. STOP SCREW ADJUSTMENT, SELECTOR CRANK

1. Spring, Kick-off	110480
2. Adjusting Screw, Kick-off	73503-95
3. Cancel Sleeve and Bushing Assembly	68483
4. Tip and Mounting Bracket Assembly, Inner	110936
5. Link, Selector Crank Actuator Arm	110928
6. Actuator Arm and Link Assembly	110939
7. Selector Shaft and Adjusting Plate Assembly	110952
8. Spring, Switch Lever	68774
9. Adjusting Screw, Carriage Switch	73503-95
10. Spring, Selector Latch Pins	110480
11. Adjusting Screw, Selector Crank Stop	73502-95
12. Selector Latch Pin, Inner	110941

(2) Check the left hand back stop pawl, as viewed from the rear of the phonograph, by releasing an outer (even number) pin. The timing between backstop pawl engagement and reverse relay operation should be identical. If not,do not adjust the actuating screw since it was adjusted to time the right pawl with inner pins. The tip and mounting bracket assembly which engages the outer pins may be adjusted to time the carriage switch action with the left pawl to synchronize with the right pawl. This adjustment should be checked at several positions around the pin assembly using outer (even number pins.

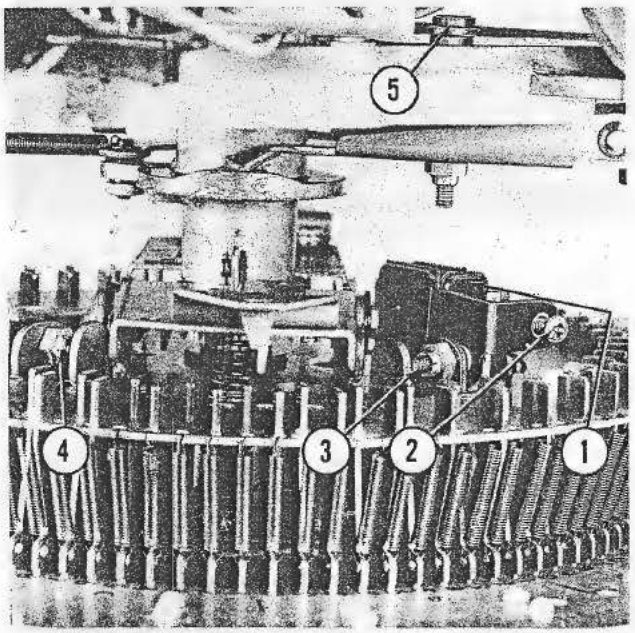

Fig. 65. ELECTRIC SELECTOR 2410

1. Micro Switch, Carriage	110558
2. Adjusting Screw, Carriage Switch Actuating	73503-72
3. Adjusting Screw, Stop	73503-91
4. Adjusting Screw, Kick-off	73503-93
5. Adjusting Screw, Selector Crank Clearance	73793-125

q. STOP SCREW ADJUSTMENT, 2400 and 2410

The stop screw serves to prevent momentum from driving the record carrier into the wrong selection. Check the setting of the stop screw (Fig. 64, Item 11) by releasing an inner pin and rotating the record carrier manually until the reverse relay is heard to operate. Continue by turning the changer motor shaft clockwise until the stop screw (Item 8) is resting against the tab of the stop bracket. At this point there should be 1/16" to 3/32" maximum overtravel between the back stop pawl and the tooth of the index wheel (Fig. 58, Item 1).

r. KICK-OFF SCREW ADJUSTMENT, 2400 AND 2410

Adjustment of the kick-off screw will be made with the index wheel held against a backstop pawl. The adjusting screw should be set to locate the tip (Fig. 66, Item 3) on the center line between the inner pin (Item 2) and the outer pin (Item 3). Check the alignment of the tip on the inner crank arm at twelve positions around the selector pin assembly and then the tip on the outer arm at twelve positions.

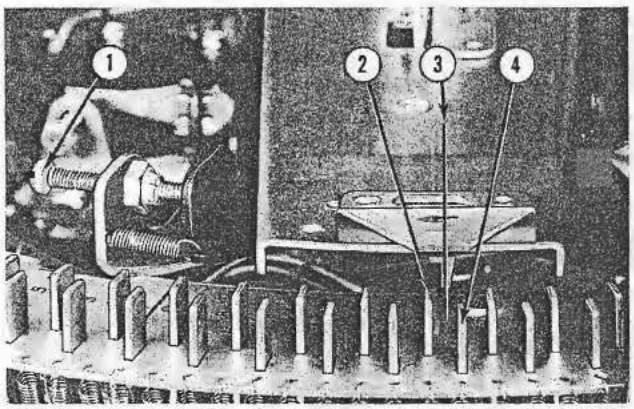

Fig. 66. KICK-OFF SCREW ADJUSTMENT

1. Screw, 10-32 x 1", R.H., Kick-off	73502-95
2. Selector Latch Pin, Inner	110941
3. Center Line of Bracket Tip	
4. Selector Latch Pin, Outer	110942

s. ACTUATING SCREWS, MICRO REVERSE SWITCHES, 2404

To adjust the reverse switches (Fig. 67, Item 1), turn the service switch OFF. Release any selector latch pin and rotate record carrier until selector crank arm engages selector pin and releases latch plunger. The reversing switch adjusting screws (Item 3) should travel 1/32" before the switches actuate. As the latch plunger is reset the adjusting screws should travel 1/32" before switch actuation.

t. TRANSFER SWITCH ADJUSTMENT, ALL MODELS

Release a selector pin and let the mechanism advance in its cycle until the roller (Fig. 68, Item 5) has passed the cam lobe (Item 6). Turn off service switch and back out the adjusting screw (Item 4) until the insulating stud clears the switch actuator. Advance the mechanism through its cycle until the roller (Item 5) is again on the cam lobe (Item 6). Turn the power OFF and adjust the screw (Item 4) until the transfer switch is actuated over center by its toggle spring (Item 2). The adjusting screw should be turned 2 full turns beyond this point for overtravel. Check the mechanism through several cycles for proper switch actuation.

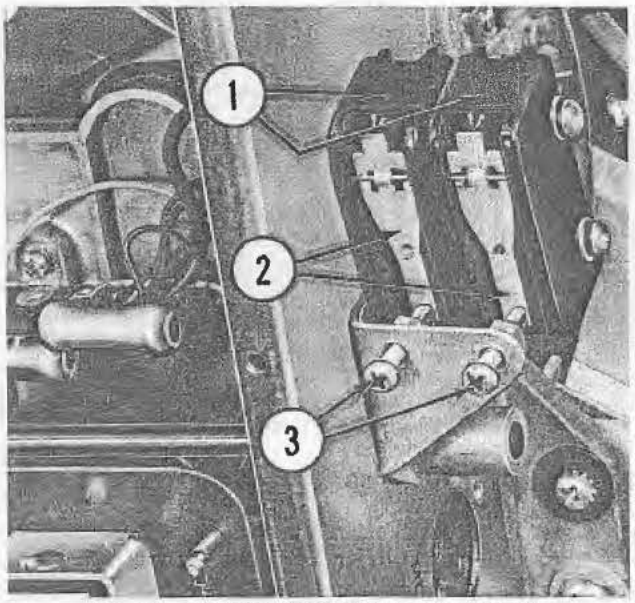

Fig. 67. REVERSING SWITCH ADJUSTMENT

1. Reversing Switches	61596
2. Switch Actuators	
3. Adjusting Screws	73503-73

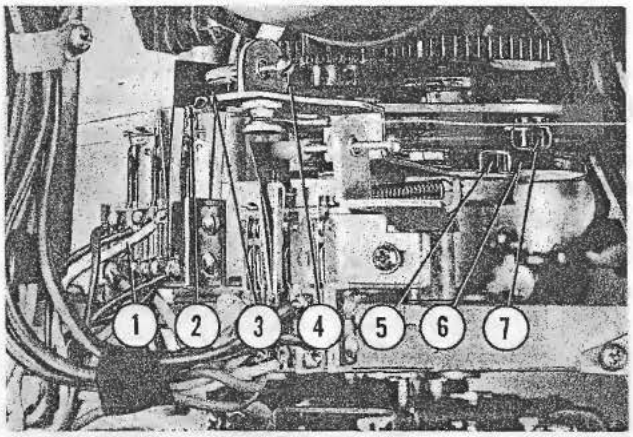

Fig. 68. TRANSFER SWITCH SETTING

1. Transfer Switch		59569
2. Over-Center Spring		59569-1
3. Position of Switch for Adjustment		
4. Adjusting Screw and Actuator	73574-31	58255
5. Roller, Transfer Switch Actuating Arm		56594
6. Long Lobe on Side of Main Cam		62792
7. Roller, Actuating Arm, Tone Arm		56594

u. MUTE AND PLAY SWITCH ADJUSTMENT, ALL MODELS

The mute and play switch is actuated by the adjustable cam lobe (Fig. 69, Item 2). The timing marks (Item 1) should be in alignment. Advance the mechanism in its cycle until the roller (Fig. 70, Item 3) is at the base of the lobe still resting on the surface of the main cam. Adjust the stop plate (Fig. 71, Item 6) to meet the actuating arm at (Item 3) with a maximum of 1/64" clearance between the roller and the surface of the main cam (Fig. 70,

Item 2). Manually turn the changer motor shaft counterclockwise until the roller is on the peak of the adjustable lobe. Continue turning the changer motor shaft in the same direction and as the roller rides off the adjustable lobe the play switch should be adjusted to actuate with 1/16" overtravel of the switch tab (Fig. 71, Item 2).

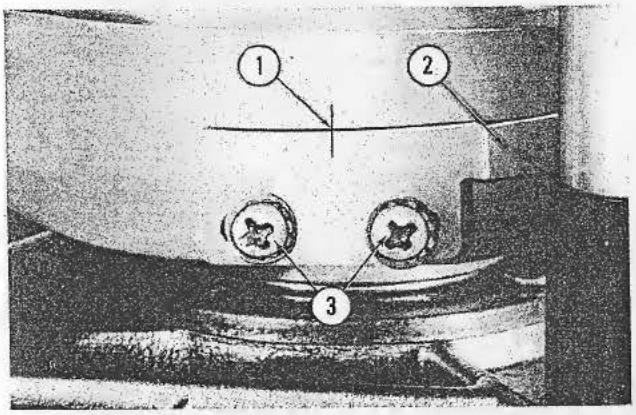

Fig. 69. TIMING OF MUTE AND PLAY SWITCH

1. Timing Marks, Main Cam and Adjustable Cam
2. Adjustable Cam, Mute and Play Switch 62768
3. Locking Screws, Adjustable Cam 73534-14

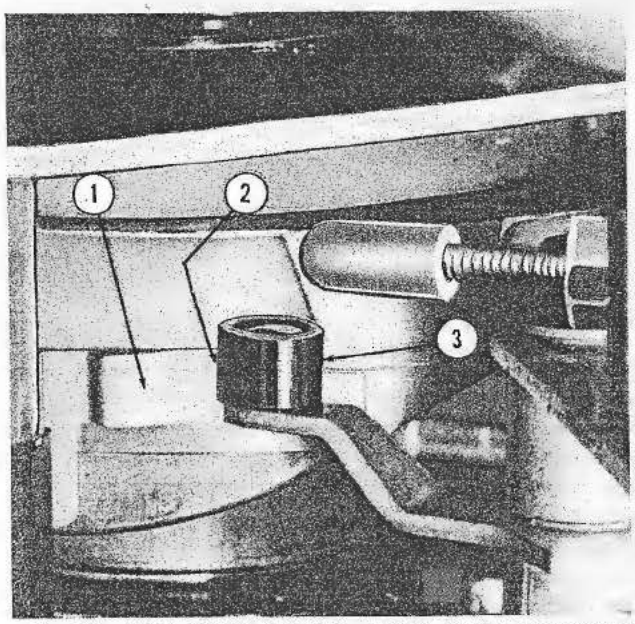

Fig. 70. STOP PLATE SETTING, MUTE AND PLAY SWITCH

1. Mute and Play Switch Cam 62768
2. Zero to 1/64" Clearance, Stop Plate Setting
3. Roller, Actuator Arm, Mute and Play Switch 56592

Run the mechanism through several cycles to check for correct mute and play switch action. Observe closely for any forward movement of the record clamp cam (Fig. 72, Item 5) at the time the tone arm trip switch actuates or any return action of the cam at the time the play switch actuates to stop the changer in play position. Either condition existing requires readjustment of the play switch cam lobe (Fig. 69, Item 2).

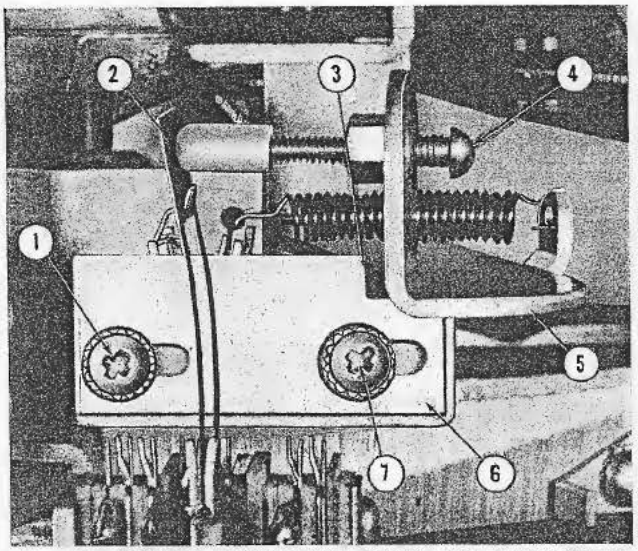

Fig. 71. STOP PLATE SETTING, MUTE AND PLAY SWITCH

1. Locking Screw 73533-22
2. Switch Tab, Over-travel Measured at this Point
3. Stop Position
4. Adjusting Screw 73574-31
5. Actuating Arm, Mute and Play Switch 62761
6. Stop Plate 62769
7. Locking Screw 73533-22

v. TURNTABLE ADJUSTMENTS, ALL MODELS

(1) The turntable release arm (Fig. 72, Item 4) must be centered about the hub of the record clamp plate (Item 2). Loosening the mounting screws (Item 6) will permit alignment of the rollers (Item 3).

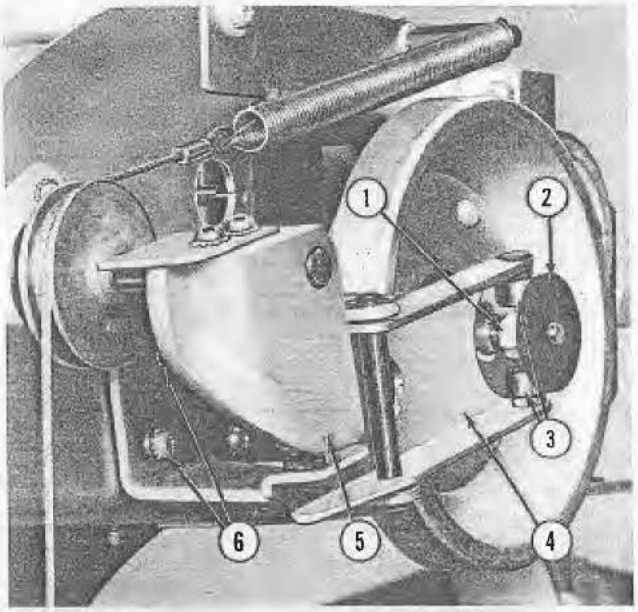

Fig. 72. RECORD CLAMP SETTING

1. Lock Nut 73601-10
2. Record Clamp Plate 63205
3. Turntable Release Arm Rollers 59485
4. Turntable Release Arm 59484
5. Record Clamp Cam 59464
6. Mounting Screws, Turntable Arm Bracket 73533-34

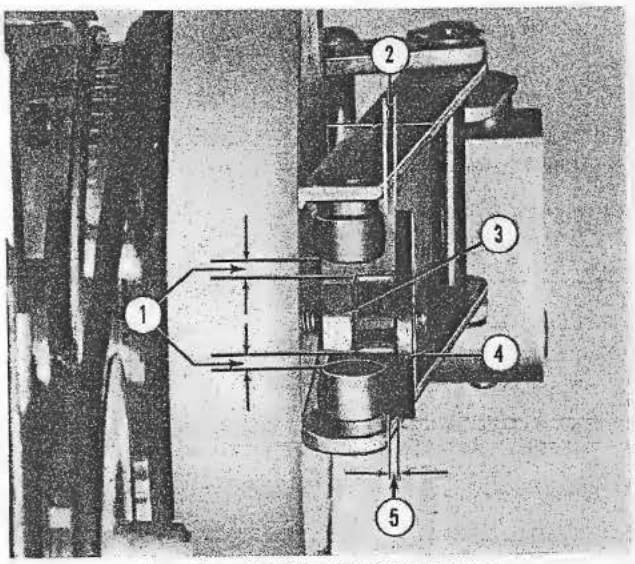

Fig. 73. RECORD CLAMP SETTING

1. Equal Distance
2. Record Clamp Plate Clearance 1/32" to 1/16"
3. Lock Nut 73601-10
4. Record Clamp Plate 63205
5. Record Clamp Plate Clearance 1/32" to 1/16"

(2) With a record in play position on the turntable, shut the power off. Pull back the clamp plate (Item 4) and loosen the locknut (Item 3). Release the clamp plate slowly to play position and adjust the clamp plate on the threaded clamp rod to provide 1/32" to 1/16" clearance (Fig. 73, Items 2 and 5) between the rollers and the clamp plate. Tighten the locknut. Manually return the record clamp cam (Fig. 72, Item 5) to its normal rest position and check the clamp rod for additional travel. The clamp rod must not jam in rest position, but should return far enough to retract the turntable pilot 1/32" to 1/16" inside the turntable assembly (Fig. 74, Item 1).

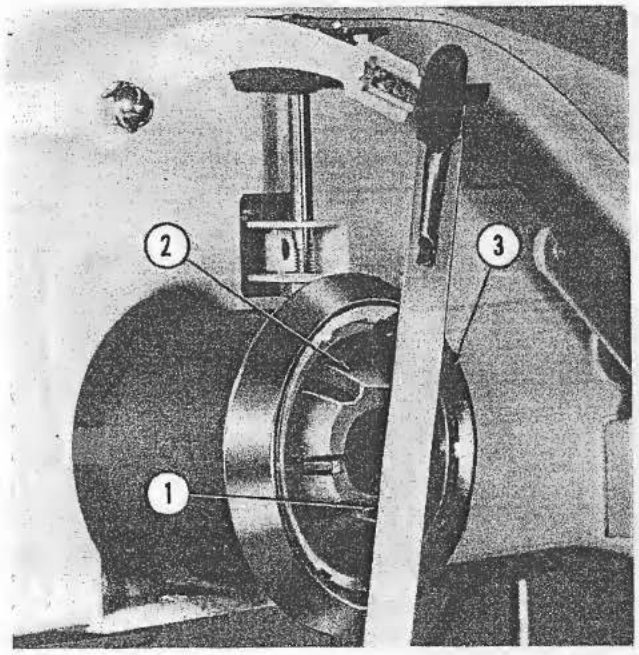

Fig. 74. TURNTABLE PILOT SETTING

1. Clearance 1/32" to 1/16"
2. Turntable Pilot 59449
3. Turntable 68033

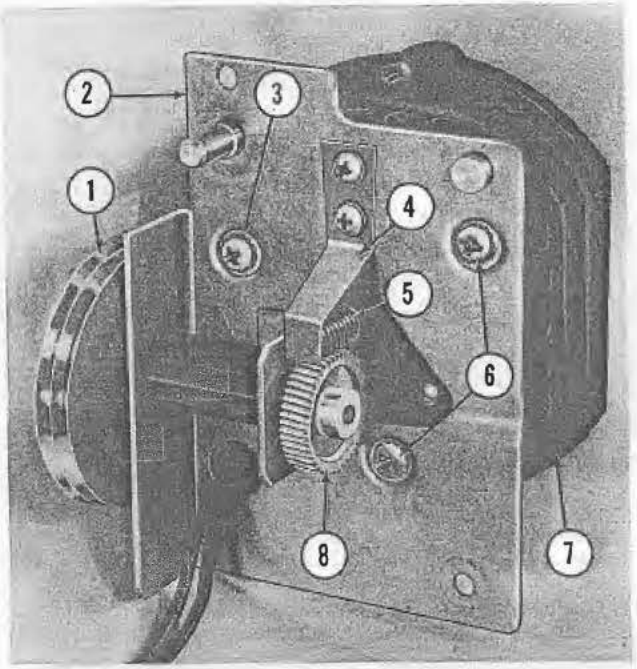

Fig. 75. TURNTABLE DRIVE GEAR ADJUSTMENT

1. Drive Pulley 115023
2. Motor Mounting Plate 60946
3. Screw, Motor Mounting 73533-22
4. Thrust Spring 60893
5. Worm Gear 115206
6. Screw, Motor Mounting 73533-22
7. Motor 115058
8. Drive Gear 65203

(3) The turntable table drive gears (Fig. 75, Items 5 and 8) are adjustable for alignment and mesh. The motor and mounting plate assembly may be removed from the top support casting by disconnecting the line plug (Fig. 76, Item 3) near the tone arm trip switch. Two lock nuts (Item 6) hold the mounting plate to the two top rubber mounts and a retaining ring (Item 9) holds the bottom stud. With the motor and mounting plate removed the motor may be shifted on the mounting plate by loosening the three screws (Fig. 75, Items 3 and 6) to center the worm gear over the nylon pinion gear and to mesh sufficiently for free running with a minimum of back lash. The thrust spring (Fig. 75, Item 4) should bear against the steel ball in the end of the worm gear with a pressure of 2-1/2 to 3-1/2 ounces. The gears and motor bearings should be well lubricated as indicated in the maintenance instructions.

(4) The turntable drive pulley is mounted on the driver gear shaft with an allen set screw (Fig. 76, Item 10). The pulley should be mounted on the shaft to allow approximately .006" end play.

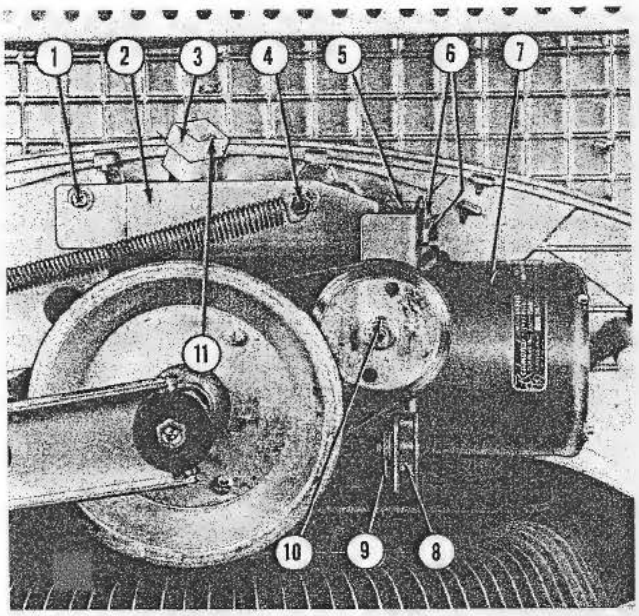

Fig. 76. TURNTABLE MOTOR MOUNTING AND BELT ADJUSTMENT

1. Screw, 8-32 x 1/2" R.H. Sems	73533-38
2. Mounting Bracket, Upper	60889
3. Cap, Shown Disconnected	113527
4. Spring Pin	61111
5. Rubber Mount	60882
6. Nut, 8-32 Hex.	73601-7
7. Motor and Worm Assembly	116905
8. Grommet	49884
9. Retaining Ring	73724-25
10. Set Screw, 6-32 x 3/16" Allen	73513-19
11. Contact	111527

(5) The turntable drive belt tension is adjustable by loosening the stud (Item 4) and the screw (Item 1). The upper motor mounting bracket (Item 2) may be shifted on its elongated mounting holes.

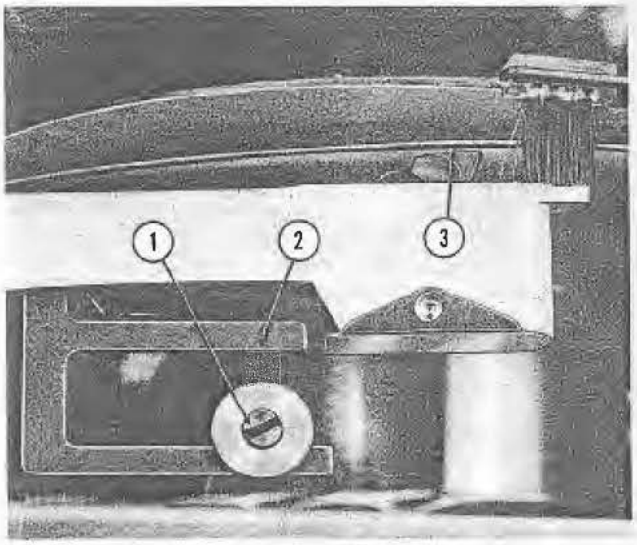

Fig. 77. TONE ARM FEED-IN ADJUSTMENT

1. Tone Arm Stop Pin Assembly (Feed-in Adjusting)	115660
2. Tone Arm Latch	64423
3. Feed-in Start Position	

w. TONE ARM ADJUSTMENTS, ALL MODELS

(1) The tone arm feed in adjusting screw (Fig. 77, Item 1) is set at the factory using fixture X42226 (Item 3) and should need no adjustment. However, when a readjustment is required it may be accomplished by advancing the record changer in its cycle until a record is clamped on the turntable. Turn the service switch off before the needle contacts the record and adjust the feed in screw (Item 1) to position the needle in the feed-in groove of the record. The setting should be 2-5/8" to 2-11/16", measured from the outside circumference of the turntable pilot to the needle, to conform with R.I.A.A. standards.

(2) Tone arm latch bracket adjustment should be accomplished with a perfectly flat record in play position, the tone arm free from the latch bracket ready to play. The feed-in adjusting screw should be centered within the latch bracket (Fig. 78, Item 3). If adjustment is required, turn the adjusting screw (Item 5).

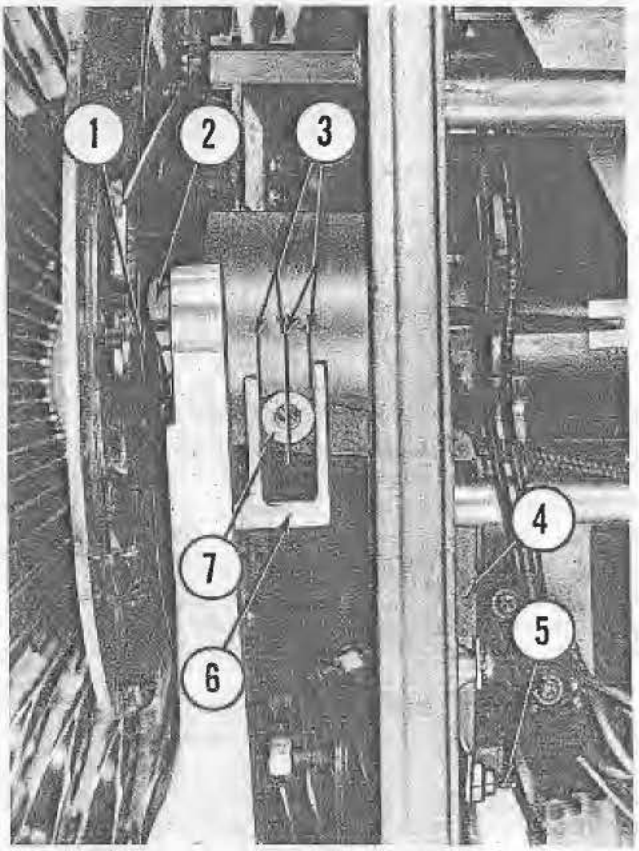

Fig. 78. TONE ARM LATCH LEVER ADJUSTMENT

1. Record		
2. Needle,	Cobra 57525	Stereo 116727
3. Dimension, Equal Each Side		
4. Tone Arm Release Bracket		116921
5. Adjusting Screw		64427
6. Tone Arm Latch Bracket		64423
7. Stop Pin, Tone Arm Feed-in		115660

(3) Needle pressure adjustment may be accomplished by turning the stop nut (Fig. 79, Item 3) to vary the spring tension on the tone arm. With a record in play position and the power off, use a gram scale such as Graybar 70-D, measuring, at the end of the tone arm, the pressure needed to just pull the needle off the record (Fig. 79, Items 1 and 2). The recommended needle pressure on the "Cobra" pick up should be 10 to 12 grams and on the Sonotone Stereo needle it should be 4 to 5 grams.

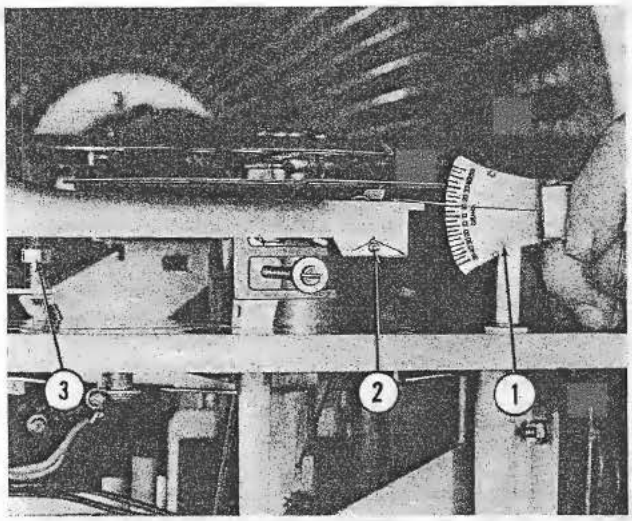

Fig. 79. NEEDLE PRESSURE ADJUSTMENT

1. Gram Scale	
2. Tone Arm, Free for Compliance	116142
3. Stop Nut, Needle Pressure Adjustment	73865-8

(4) Tone arm balance adjustment should be accomplished with the mechanism in play position, no record on the turntable and the service switch off. Using a piece of thread (Fig. 80, Item 3) tie the tone arm in a position where the latch bracket (Item 2) clears the feed in screw (Item 1). Using a gram scale such as Graybar 70-D measure at the pick up end, the pressure needed to move the arm in either direction: i.e. up or down. When correctly balanced by the adjusting screw (Item 6) the arm should move with no more than 1 gram pressure at any position in its swing. If a gram scale is not available a light puff of air should move the arm.

(5) The tone arm trip switch (Fig. 81, Item 9) is adjustable by means of the screw (Item 10) and actuated by the bracket (Item 6). The switch is adjusted at the factory to R.I.A.A. standards which allows for extended play records. Due to the wide variations in records it may be necessary to readjust the trip switch. This may be done by measuring 1-1/4" to 1-5/16" from the edge of the centering hole in a standard record and marking. Place the record in the record carrier and select the marked side. Adjust the trip switch screw (Item 10) to produce switch action when the needle is on the mark.

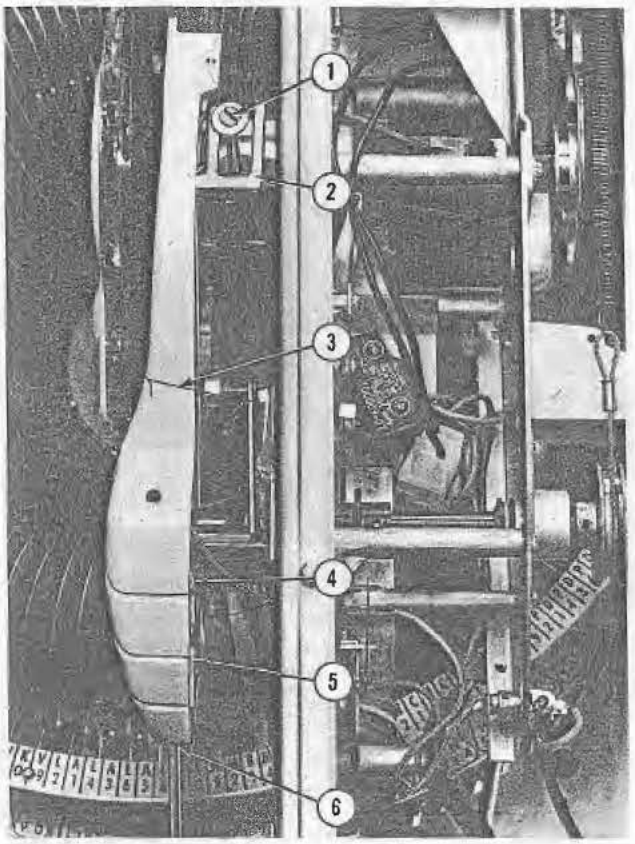

Fig. 80. TONE ARM BALANCING ADJUSTMENT

1. Stop Pin Assembly, Tone Arm Feed-in	115660
2. Latch Bracket, Tone Arm	64423
3. Thread, Tie Down	
4. Stop Nut, Tone Arm Balance	23879
5. Balancing Weight and Bracket Assembly	65273
6. Screw, Balance Adjustment	73575-100

(6) The tone arm needle brush adjustment should be accomplished with the phonograph in its normal at rest position. The needle brush (Fig. 82, Item 4) should be 1/4" to 1/2" below the cartridge. The dimension may be varied by loosening the mounting screws (Fig. 83, Item 1) and moving the idler wheel. The needle brush is actuated by the action of the transfer switch causing the brush to sweep across the tip of the stylus. The tip of the stylus should project into the brush a depth of 1/32" (Fig. 82, Item 5). The brush mounting bracket may be formed to provide the correct wiping action. Use care in adjusting the wiping action to avoid damage to the cartridge. Removal of the silicone damping grease between the stylus and the cartridge housing will result in poor tone quality.

x. CHANGER MOTOR PINION GEAR MESH

The changer motor pionion gear (Fig. 84, Item 4) mesh is adjustable by loosening the two mounting screws (Item 1). The motor and mounting bracket assembly (Item 2) may be shifted to provide minimum back lash between the pinion gear (Item 4) and main drive gear (Item 5) with no bind.

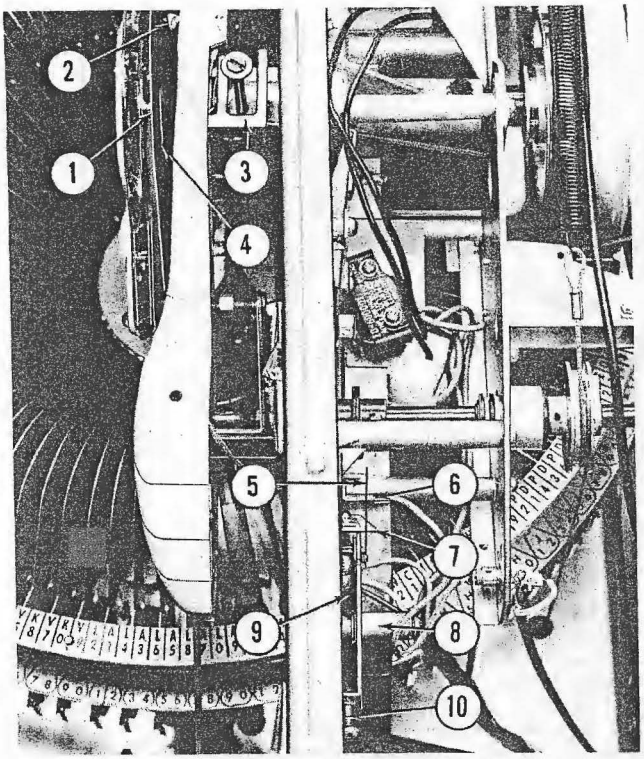

Fig. 81. TRIP SWITCH SETTING

1. Record Disc		X42226
2. Pick-up Needle	Cobra 57525	Stereo 116727
3. Latch Bracket, Tone Arm Feed-in		64423
4. Trip Groove		
5. Arm, Trip Switch		59583
6. Actuating Bracket, Part of Tone Arm		
7. Stop Bracket, Trip Switch		59432
8. Mounting Bracket, Trip Switch		59739
9. Micro Switch, Trip		57851
10. Screw, Adjusting, Trip Switch		73793-86

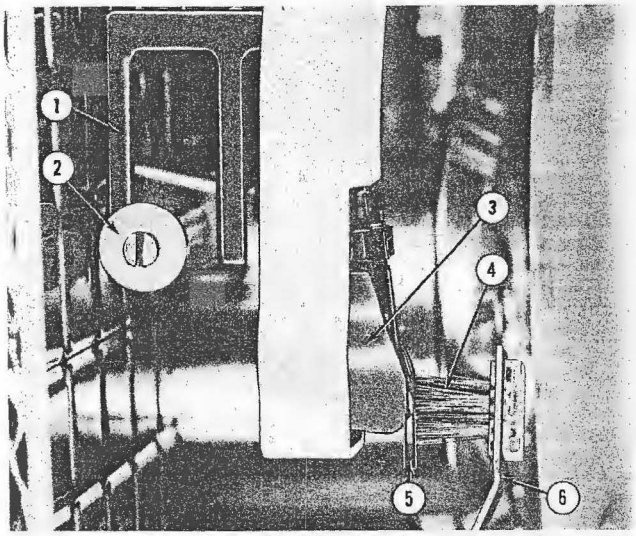

Fig. 82. TONE ARM NEEDLE BRUSH ADJUSTMENT

1. Latch Bracket, Tone Arm	64423
2. Stop Pin Assembly, Tone Arm	115660
3. Cartridge, Stereo	116725
4. Brush, Tone Arm	59830
5. Dimension 1/32" Maximum	
6. Arm and Brush Assembly	116075

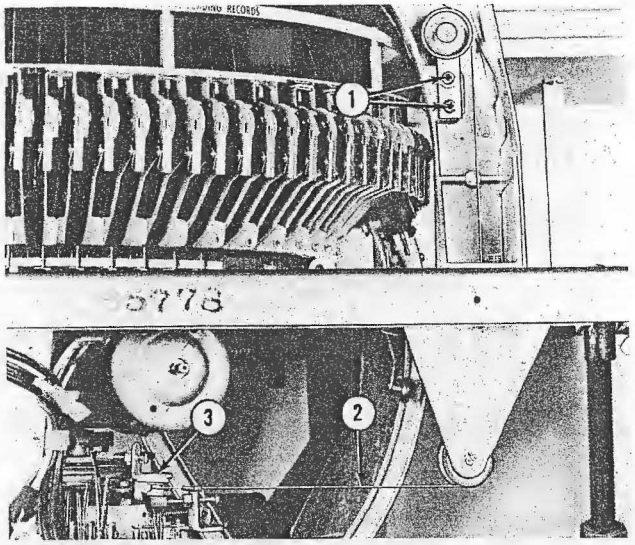

Fig. 83. TONE ARM BRUSH SETTING

1. Idler Pulley and Bracket Assembly	59717
2. Cable, Tone Arm Brush	59888
3. Actuating Arm, Transfer Switch	113299

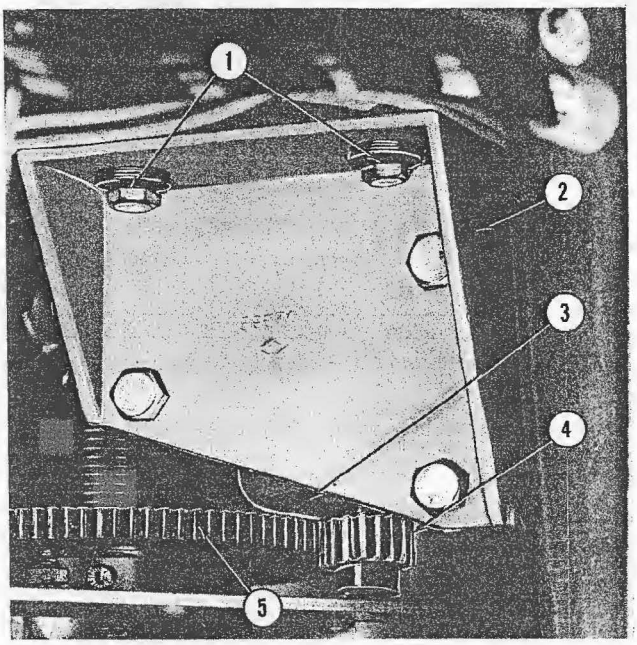

Fig. 84. CHANGER MOTOR PINION AND SELECTOR GEAR ADJUSTMENT

1. Mounting Screws, Adjustment	73793-118
2. Mounting Bracket and Motor Assembly	69066
3. Motor, Record Changer	65625
4. Drive Pinion	116997
5. Drive Gear, Selector Shaft	116986

y. ACTUATING ARM AND CABLE ADJUSTMENT

The actuating arm and cable adjustment for the turntable and tone arm (Fig. 85) should be made with the mechanism in play position. Set the adjusting screw (Item 9) so that the roller (Item 6) just rests against the stop wall of the cam with no slack in the cable (Item 7).

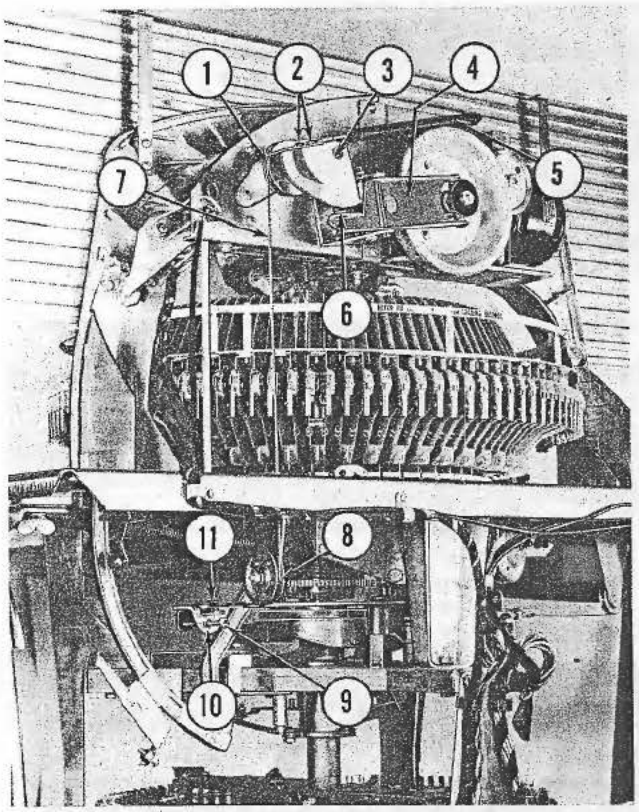

Fig. 85. ACTUATING ARM AND CABLE ADJUSTMENT, TURNTABLE AND TONE ARM

1.	Drive Pulley, Turntable and Tone Arm Cams	59415
2.	Stop Plate, Turntable Cam	60599
3.	Turntable Cam	59464
4.	Turntable Release Lever	59922
5.	Spring, Tension	61174
6.	Roller, Turntable Release Lever	59485
7.	Cable, Record Clamp and Tone Arm	59871
8.	Guide Pulley	59487
9.	Adjusting Screw	73502-99
10.	Actuating Arm	59688
11.	Slide Pin	59686

6. MAINTENANCE

a. INSTALLATION OF NEW TURNTABLE ACTUATING CABLE

(1) To install a new cable for the turntable actuating shaft assembly, pass the cable (Fig. 86, Item 2) through the hole in the drive pulley (Item 3) and form a loop at each end of the cable 3/4 of an inch long, clamping with sleeves (Items 1 and 4). Locate the cable in the pulley to conform to the dimensions shown at (Items 6 & 7) and lock securely with the set screw (Item 5).

(2) Remove the two screws holding the stop plate on the turntable cam (Fig. 85, Item 2) to allow the cam to rotate counterclockwise, as viewed from the rear, far enough to hook the lower loop in the cable over the slide pin (Item 11). The cable should pass over the idler pulley (Item 8).

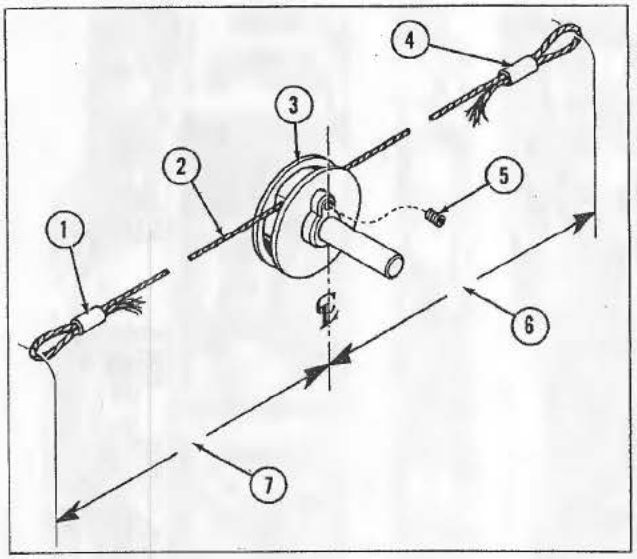

Fig. 86. TURNTABLE CABLE AND DRIVE PULLEY

1.	Collar (Sleeve)	61658
2.	Cable	59871
3.	Drive Pulley	59415
4.	Collar (Sleeve)	61658
5.	Set Screw	64427
6.	6 3/16" From Center Line to Inside of Loop	
7.	18 7/8" From Center Line to Inside of Loop	

The upper end of the cable will pass once around the drive pulley (Item 1) and hook to the spring (Item 5). The free length of the spring should be approximately 3-1/2". Replace the roller of the release lever (Item 6) back of the cam and replace the stop plate (Item 2).

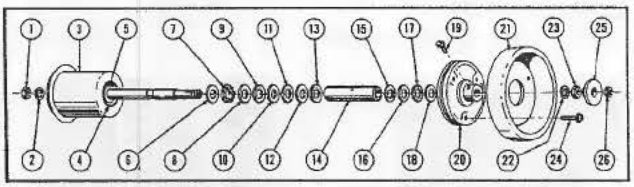

Fig. 87. SHIM PROCEDURE FOR ASSEMBLING TURNTABLE SHAFT

1.	Nut	59470
2.	Lockwasher	73607-12
3.	Turntable and Shaft Assembly	68102
4.	Oil Slinger	59571
5.	Washer on Shoulder of Shaft	56530
6.	Washer	59864
7.	Ball Race	59867
8.	Washer	59864
9.	Washer, Fiber	63732
10.	Washer, Metal Shim	63731
11.	Washer, Fiber	63732
12.	Washer, Metal Shim	63731
13.	Washer, Fiber	63732
14.	Sleeve and Bushing Assembly	64520
15.	Washer, Fiber	63732
16.	Washer, Metal Shim	63731
17.	Washer, Fiber	63732
18.	Washer on Shoulder of Shaft	56530
19.	Screw, Special	59399
20.	Pulley	64190
21.	Fly Wheel	59456
22.	Lockwasher	73607-12
23.	Nut	59470
24.	Screws, Sems	73533-38
25.	Plate, Record Clamp	63205
26.	Nut	73601-10

b. SHIM PROCEDURE FOR ASSEMBLING TURNTABLE SHAFT

Following installation of the thrust bearing group (Fig. 87, Items 6, 7 and 8) against the turntable, three fiber washers (Items 9, 11 and 13) and two metal washers (Items 10 and 12) should always be installed on the turntable end of the shaft. They should be installed starting with a fiber washer, a metal washer next, then a fiber, a metal and ending with a fiber. The turntable shaft is installed in the sleeve and bushing after which the shim washers are installed at the fly wheel end starting with a fiber washer and ending with a fiber washer alternating with metal washers until the shaft end play is within .008" to .013". After assembly the bearings should be well oiled with S.A.E. 10 motor oil.

c. LUBRICATION

The turntable motor bearings should be lubricated every three months with a good grade motor oil S.A.E. 10. Complete lubrication of the entire mechanism should be done every six months in accordance with the following instructions.

(1) Houghton Absorbed Oil, Type L-3, part number 21934A, should be used at points where a non-fluid type lubricant is required such as: The main cam working surfaces (cam tracks), gears and pinions, turntable worm gear and pinion, spring anchor points and the bearings of heavy linkage.

(2) A good grade motor oil, S.A.E. 10, should be used on all light weight linkage and lever bearings and the following points: Record lift arm guide roller bearings, the annular bearings under the record carrier, turntable drive shaft and motor bearings, the main cam shaft, the tone arm actuator shaft assembly, the record carrier shaft, the turntable sleeve bearing, the center bearing of the changer motor.

(3) To oil the record lift arm bearings turn the record carrier until the half inch hole, located one and a half inches off center in the carrier casting is directly in front. At this position the half inch hole will align with a hole in the chassis mounting plate. Oil through the two holes will be absorbed by a felt pad which will lubricate the record actuator arm bearings.

(4) The reduction gears of the changer motor assembly are packed with a non-fluid lubricant (Alvania No. 1), part number 55206A and should require no further lubrication. However the center bearing of the changer motor, provided with an oiler on the top, should be oiled every six months.

d. CLEANING

(1) Electrical contacts are nominally made of silver and are therefore, quite soft. Cleaning should be done with a burnishing tool made expressly for the purpose or a strip of heavy bond paper.

(2) To maintain the inherent customer play appeal it is advisable to periodically clean the phonograph inside and out. The decorative background and the Dinoc sides of the cabinet may be wiped down with a mild soap and warm water. The plastic plate on the record guide assembly should be cleaned with an antistatic cleaner. Use caution in cleaning to avoid damage to the stylus. The front door glass should be cleaned with clear water.

e. REPAIRS TO FINISH

The side panels of the cabinet are clear lacquer finished over a "Dinoc" dry strip transfer which may be ordered as needed (part number 116647). The piece is used either on right or left side and will be trimmed to fit. The upper side plate is also covered with a "Dinoc" dry strip transfer and may be ordered by part number 116594, R.H. or 116596, L.H.

(1) Minor scratches and abrasions, not into the wood, may be treated directly with a touch-up brush and colors lifted from a piece of the Dinoc transfer. Thoroughly clean the surface to be repaired to remove any wax or foreign material. Dip the touch-up brush in undiluted welding solution (A1171) and lift the color desired from a patch of the transfer. Blend into area to be repaired. Allow each color to dry before applying the next one. After thoroughly drying, the area should be sprayed with satin finish clear lacquer (Inter Chemical 12575 Water White) or equivalent. Do not use a brushing lacquer.

(2) When major repairs are to be made fill deep scratches and uneven areas with lacquer glazing putty and allow to dry for one half hour. Sand to a perfectly smooth surface. If the sanding operation cuts through to the bare wood, spot spraying with clear lacquer must be done to seal the wood pores from the moisture of the welding solution. Air dry the lacquer spray. Using a repair panel (116647) select and cut out a section to match the grain at the repair area. Lift the transfer from the backing. Sandpaper is effective for starting.

(a) Sponge the repair surface liberally with clear water and apply the selected section of transfer. The presence of the water will permit sliding of the transfer to match up the grain.

(b) When properly positioned, sponge the surface of the transfer to provide slippage for squeegee operation to remove excess water.

(c) Pick up one corner of the transfer and roll it back until approximately one half of the repair surface is exposed. Sponge on a liberal coat of diluted (4 parts water to 1 part A1171) welding solution and lay the transfer back in position.

(d) Keeping the surface of the transfer wet with water begin squeegeeing from the center to the outer edges, using firm overlapping strokes to remove all air bubbles and excess welding solution.

(e) Roll back the other half of the transfer until adhesion of the first half can be detected, and proceed in the same manner as above. The squeegeeing operations should always be done with short, firm, overlapping strokes on a surface well moistened with water.

(f) Wash the surface thoroughly with water to remove all excess welding solution and prevent marking the finish. Should any bubbles appear, slice them with a razor blade and press out the air or welding solution. Repeat washing.

(g) Allow the panel to air dry over night before spraying with satin finish clear lacquer as mentioned under minor repairs.

f. INSTALLATION INSTRUCTION

(1) In removing the shipping cleats and the various "tie-downs", carefully note the instructions on the respective tags. These tags will be found at the important "tie-down" points for your convenience in unpacking and as a guide for preparation of the phonograph when it is again trucked. It is very important that the wooden strips be reinstalled under the record carrier and the four chassis "hold-down" thumb screws be tightened during any transportation. It is recommended that the "tie-wires" through the "hold-down" thumb screws be saved and reinstalled before transporting the phonograph. During operation, the chassis "hold-down" thumb screws should be completely unscrewed from the chassis. They are provided with retainers to keep them in the mounting brackets. The chassis should set squarely on its four mounting springs and float freely all around.

(2) Do not expose the phonograph to direct sunlight or place in close proximity to hot radiators or space heaters. Excessive heat inside the cabinet will warp the records, resulting in unnecessary service calls.

(3) It is recommended that all cables entering the phonograph be made long enough to permit the phonograph to be moved far enough for ease in servicing and floor cleaning. Service calls will be reduced if the cables are neatly formed and held off the floor by a suitable hook on the rear door of the phonograph.

(4) A level footing should be provided for the phonograph to insure correct operation of the coin mechanism. Should leveling be necessary it may be accomplished by removing the caster where height is required and installing 7/16" iron washers over the caster pin. Replace the caster and check the phonograph for correct coin operation.

(5) Do not over fuse the electrical circuits. Doing so may result in severe damage to the power supply. Should trouble develop in the low voltage circuits it is suggested that a test lamp be used in checking the circuits instead of over fusing. A convenient test lamp can easily be made with the following parts:

1 - Cap for fuse post
1 - Blown bus fuse
1 - Lamp socket for,
1 - G.E. #305 lamp
2 - 4" lengths of plastic coated #20 stranded wire

The steps in assembling the test lamp follow:

(a) Drill through the center of the fuse cap using a number 18 drill.

(b) Drill a hole in the center of each ferrule on the blown fuse using a number 36 drill.

(c) Solder one of the wires to the end of one ferrule being careful to keep the hole clear.

(d) Pass the other wire through both ferrules and solder to the end opposite the first wire soldered in step (c).

(e) Pass both wires through the fuse cap and solder to the socket terminals.

(f) Insert the G.E. #305 lamp in the socket.

(g) Plug the test assembly into the fuse holder of the particular low voltage circuit to be tested. If the circuit is shorted or grounded the lamp will light to full brilliance. If the circuit is normal the lamp will light at partial brilliance or not at all.

7. 259 STEPPER ASSEMBLY

a. GENERAL

The stepper assembly (Fig. 88) used with the 2410 and 2410S phonographs is mechanically similar to the stepper used with the 2400 and 2400S phonographs. The electrical circuits are wired as shown in the functional schematic, 116402 and the

wiring diagram, 116847, in the schematic section of this manual. Should it be desired to use this stepper with a 2410 or 2410S phonograph purchased without stepper the model 259 stepper (Part No. 117106) may be installed. Instructions for installation are contained with the assembly.

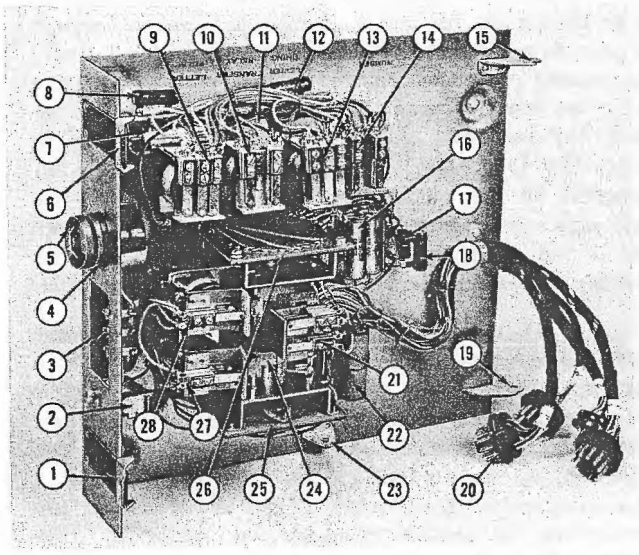

Fig. 88. 259 STEPPER ASSEMBLY

1.	Spring and Clip Assembly	115832
2.	Relay, Pulse	117048
3.	Terminal Strip	62496
4.	Socket, Fustat	61857
5.	Fustat, 3 Amp.	61858
6.	Spring and Clip Assembly	115832
7.	Capacitor, 100 Mfd., 50V., Letter Timing Relay	73862
8.	Resistor, 50 Ohms 5 W.	72986-2
9.	Relay, Letter Pulse	68940
10.	Relay, Transfer	115884
11.	Capacitor, 250 Mfd., 50V., Latch Relay	71499
12.	Resistor, 150 Ohm 5W.	71883-2
13.	Relay, Letter Timing	117061
14.	Relay, NumberTiming	115889
15.	Hinge Bracket	115835
16.	Capacitor, 100 Mfd. 50V., Number Timing Relay	73862
17.	Resistor, 560 Ohm 2W.	72474-32
18.	Resistor, 50 Ohm, 5W.	72986-2
19.	Hinge Bracket	115835
20.	Plug, 11 Pin (4)	54878
21.	Relay, Latch	114346-A
22.	Capacitor, .5 Mfd., 400V.	73099-240
23.	Pivot Bracket Assembly, Fall Support	115829
24.	Nylon Ratchet Wheel, Letters	114346-D
	Nylon Ratchet Wheel, Numbers	114346-C
25.	Contact Plate Assembly, Letters	114346-F
	Contact Arm, Letters	114346-H
26.	Contact Plate Assembly, Numbers	114346-E
	Contact Arm, Numbers	114346-G
27.	Step Magnet, Letter	114346-B
28.	Step Magnet, Number	114346-B

b. OPERATION

The stepper unit is provided with a numbered terminal strip (Item 3) for connecting the three conductor cable to the wall boxes. Number three terminal is the 24 volts A.C. fused by the 3 ampere fustat (Item 5). This circuit will accommodate four 5200 or 5202 Wurlitzer wall boxes. If more boxes are required a Model 222 booster power supply should be installed which will accommodate four additional wall boxes. A Model 222 booster should be used for each additional group of four wall boxes. The number two terminal is grounded and is a common circuit for the 24 volt a.c. return and the impulse circuit. Number one terminal is the impulse circuit which when closed to ground by the rotary contact arm in the wall box will pulse the relay (Item 2). The two sets of contacts on the pulse relay close the ground through two sets of normally closed contacts on the transfer relay (Item 10) to the number step magnet (Item 28) and the number timing relay (Item 14). The contacts on the number step magent (Item 28) close on the first pulse to energize the latch relay (Item 21). The latch relay serves to hold the step up ratchet wheels in position as they are rotated by the step up magnet and its associated pawl. At the completion of the number pulses from the wall box the number timing relay will release while the latch relay is delayed in releasing by the 250 mfd. capacitor (Item 11) discharging through its winding. During this interval the transfer relay will be energized through a normally open contact on the latch relay (closed at this time).

The first letter pulse from the wall box will now close the pulse relay (Item 2) and its contacts closing, complete the circuits through the normally open transfer relay contacts, at this time closed, to energize the letter step magnet (Item 27) and the letter timing relay (Item 13). The letter pulse relay (Item 9) will be energized by a pair of contacts on the letter timing relay (Item 13). The operation of the letter pulse relay closes a pair of contacts to hold the latch relay until the wall box completes its selection cycle. Pulsing of the letter step magnet rotates the letter ratchet wheel and contact wiper to a position determined by the number of letter pulses received from the wall box. After completion of the wall box cycle the letter timing relay releases completing the selection circuit from ground through contacts on the letter pulse relay (Item 9), contacts on the latch relay (Item 21), contacts on the number timing relay (Item 14) through the stepper rotary contact arm to energize the driver solenoid which positions the rocker plate assembly in the selector drum to the proper number position. The second wiper arm of the number pulse rotary contact wiper isolates the a.c. selection circuits for selector coils one to five or six to ten. The 24 volt a.c. circuit is completed through contacts on the letter timing relay (Item 13), contacts on the letter pulse relay (Item 9), a rotary contact wiper on the number pulse step up unit, a rotary contact wiper on the letter pulse step up unit and then to the selected letter coil. The letter coil circuit is fused through the 8/10 ampere slow-blow fuse mounted on the junction box.

8. SOUND SYSTEM

a. MONOPHONIC SOUND SYSTEM

(1) The 2400 series monophonic phonograph sound system (Fig. 89) consists of a Model 536 single channel amplifier (Item 1) with built in "automatic level control", low inertia tone arm (Item 5) with Zenith "Cobra" pick-up, and a high fidelity speaker and cross-over network (Items 2, 4 and 6). The speaker compliment consists of one 12" p.m. heavy duty, one 12" p.m. mid-range and one 7" p.m. high frequency.

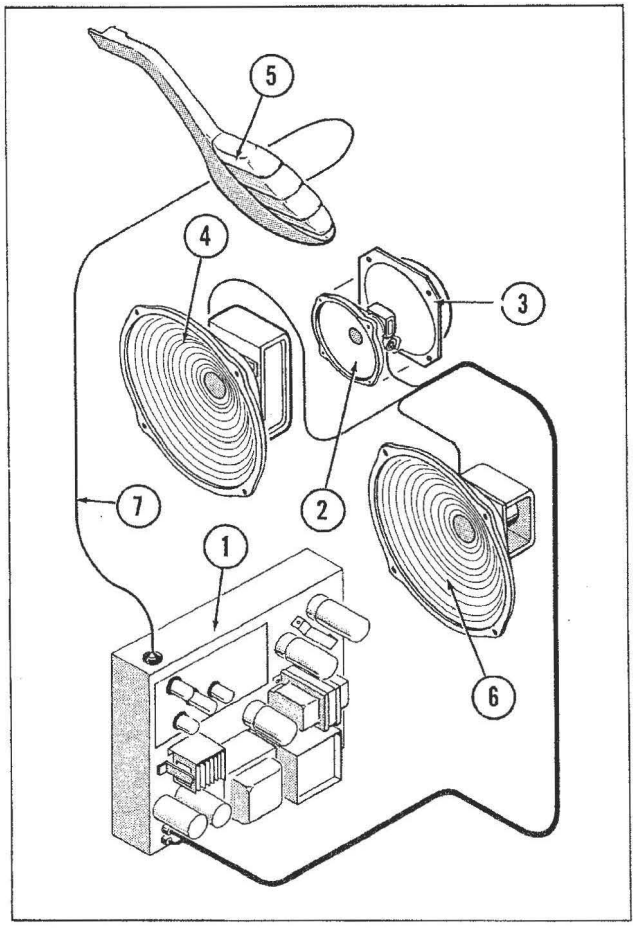

Fig. 89. SOUND SYSTEM - MONOPHONIC

1.	Amplifier, 536, Less Tubes	113153
2.	Speaker. 7"	114054
3.	Cover, 7" Speaker	114058
4.	Speaker, 12" Heavy Duty	114006
5.	Tone Arm Assembly	116142
6.	Speaker, 12" Mid Range	65192
7.	Input Cable Assembly	110190

The out-put of the Model 536 Amplifier is provided with 8 Ohm terminals and C.V. terminals with a ratio fader control for use when auxiliary speakers are used in conjunction with the phonograph. Remote volume control together with cancel facilities is available by use of Kit 147 (Part Number 65337).

(2) The low inertia tone arm is balanced as described under Figure 80. The Zenith Cobra pick-up provides maximum efficiency in the conversion of record modulation to electrical impulses with a minimum of needle and record wear.

(3) The Model 536 amplifier is slide mounted on the inside left panel of the phonograph cabinet to provide good accessibility. The main line switch, the manual reject switch, the volume control and the fader switch are mounted on the rear end of the amplifier chassis accessible through the opening along the left edge of the lower back door. Also mounted on the rear of the amplifier chassis, but only accessible when the lower back door is removed, is the auxiliary speaker terminal strip and the service outlet with a maximum rating of 4 amperes.

(4) Mounted along the top side of the amplifier chassis will be found the single prong input socket, a six prong mute switch socket, a single prong socket for connecting an auxiliary amplifier, treble and bass controls and a socket for connecting a remote volume control. The amplifier chassis is also provided with a double single prong socket for connecting the cabinet speakers, an outlet for connecting the cabinet lights and fuse holders for the 2A.D.C. fuse, the 2A. line fuse for the amplifier, the 8A. fuse for the 24V. A.C. circuits and the 15A. main line fuse. There is one eleven prong socket for connecting the electric selector to the amplifier. The A.C. and D.C. power for the phonograph is supplied by components on the amplifier chassis.

(5) The types and functions of the amplifier tubes are listed in the following table.

TYPE	DESCRIPTION	FUNCTION
1-12AU7	Twin Triode	1st Section-Oscillator and Detector. 2nd Section - Variable resistance.
1-6AN8	Pentode Triode	Pentode Section. Voltage Amplifier. Triode Section - Cathode Follower.
1-12AX7	Twin Triode	1st Section-Voltage Amplifier 2nd Section - Rectifier
1-6AU6	Pentode	Voltage Amplifier
1-12AX7	Twin Triode	Phase Inverter
2-6L6GB	Beam Power Tetrode	Out-put
1-5U4GB	Dual Diode	Full Wave Rectifier

b. THEORY OF OPERATION, 536 AMPLIFIER

The cobra pickup operates in conjunction with an oscillator using a section of the 12AU7 tube shown in the schematic on pages 43-44 of this manual. The frequency is approximately 2.5 megacycles. As the stylus and vane of the pickup responds to variations in the record groove it is moved toward and away from the small coil in the pickup cartridge which is part of the oscillator circuit. This movement of the stylus and vane amplitude modulates the oscillator, since power is absorbed by the vane - when closest to the coil the vane absorbs the most power thereby reducing the amplitude of oscillation, and when farthest away from the coil the vane absorbs the least power allowing the amplitude of oscillation to increase.

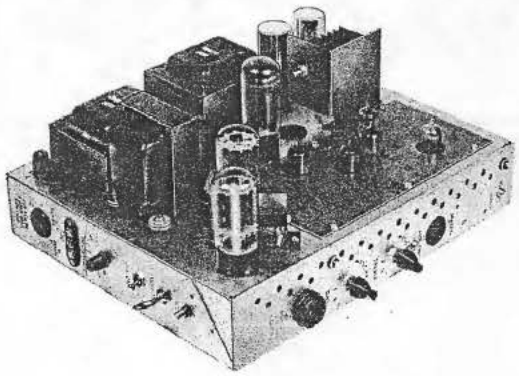

Fig. 90. MODEL 536 AMPLIFIER, LESS TUBES 113153

The oscillation (2.5 MC) taking place does so over a curved portion of the current-voltage characteristic of the 12AU7 section. As a result detection of the modulated oscillation is obtained, and the output voltage appearing at the plate of the tube contains the 2.5 MC and the audio frequencies of the record. By means of C-6 (100MMF) capacitor the 2.5 MC is filtered out, but the audio frequencies are not attenuated and they pass through the various stages of the amplifier.

(1) Referring to the block diagram (Fig. 91) it will be seen that a portion of the signal is taken from the voltage amplifier section of the 6AN8 and amplified by the first section of the 12AX7 tube. The above D.C. voltage therefore varies with the level of the record being played. This action then is used to compensate for differences in levels of various records causing low level records to be raised in volume as the signal passes through the first section of the 6AN8 while high level records will be cut down. Between the second section of the 6AN8 and the 6AU6 the signal level is set by the loudness control passing on to the 12AX7 phase inverted which drives the two 6L6GB tubes in a push-pull output system. Constant voltage output is obtained by use of the variable negative feed-back from the secondary of the output transformer. It compensates for various auxiliary speaker loads and permits maximum output with minimum distortion.

(2) During record changing intervals the amplifier is muted by the mute and play switch shown in Figures 70 and 71. It consists of one double pole, single throw switch; one single pole, double throw switch and one single pole, single throw switch mounted on a bracket at the rear of the changer and operated by a lever and an adjustable lobe on the main cam. The left hand set of contacts, as viewed from the rear is the double pole, single throw section, which shunts the audio signal between the 6AU6 and the phase inverter 12AX7. The other contact of this left hand section is used on the Model 538 stereo amplifier to mute the second channel. On the 536 monophonic amplifier the two mute contacts are tied together at pins one and six of the mute switch socket.

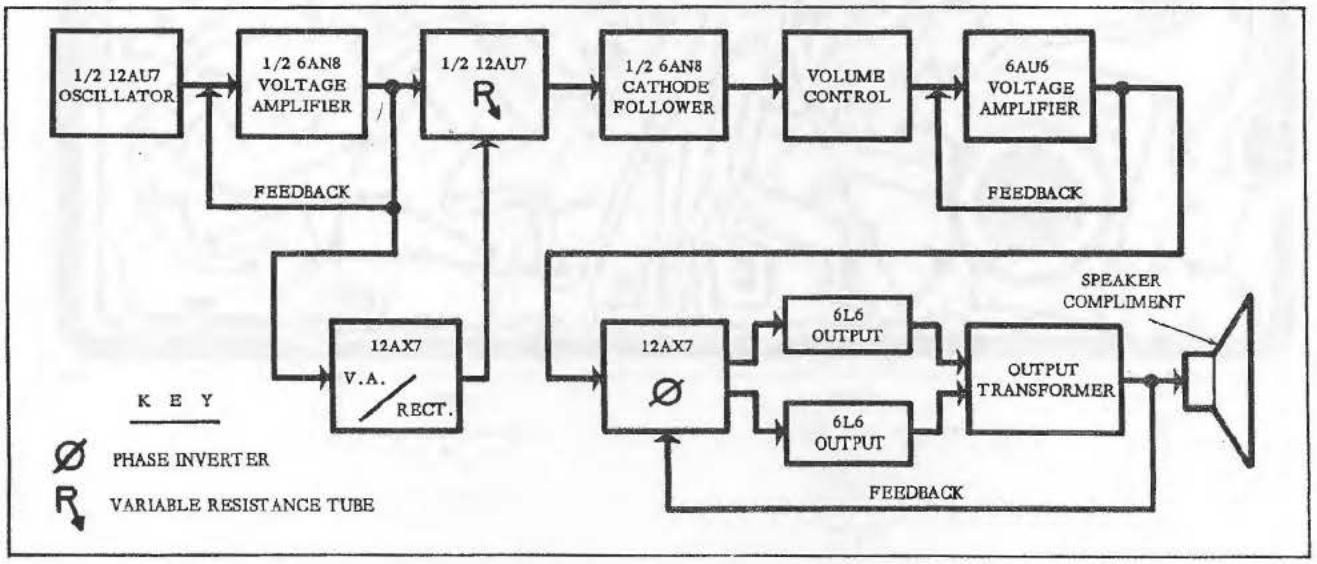

Fig. 91. MODEL 536 AMPLIFIER BLOCK DIAGRAM FOR SIGNAL TRACING.

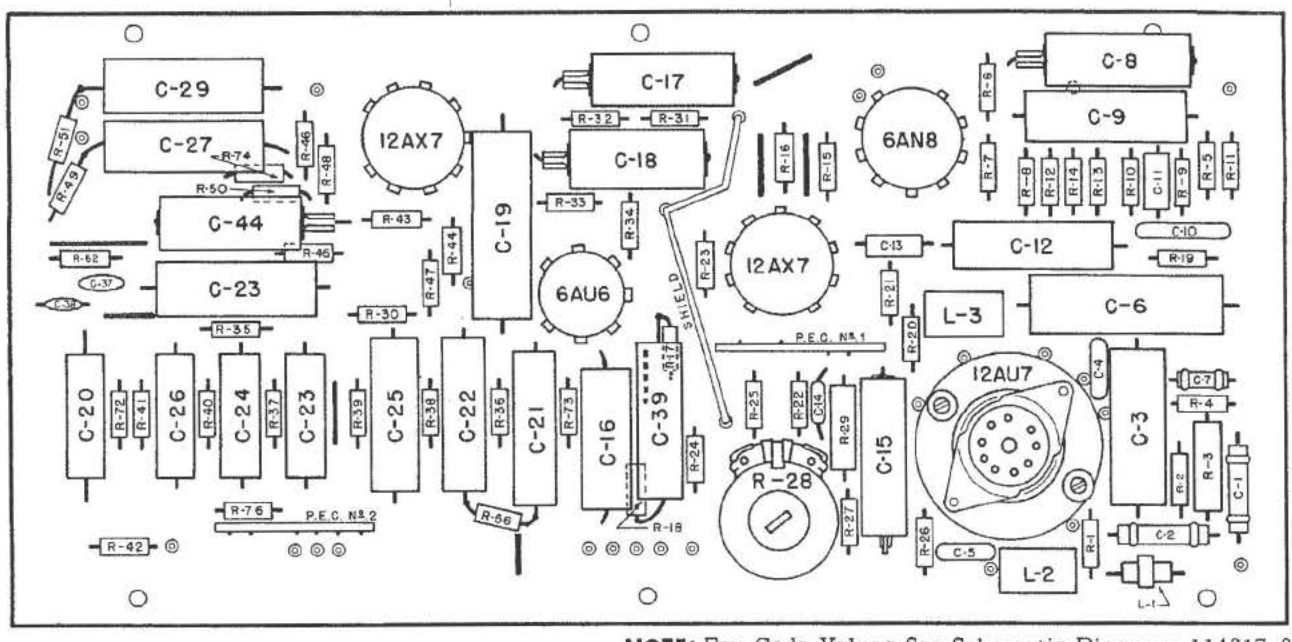

NOTE: For Code Values See Schematic Diagram 114317-3

Fig. 92 PRINTED CIRCUIT BOARD - MODEL 536 AMPLIFIER (TOP SIDE)

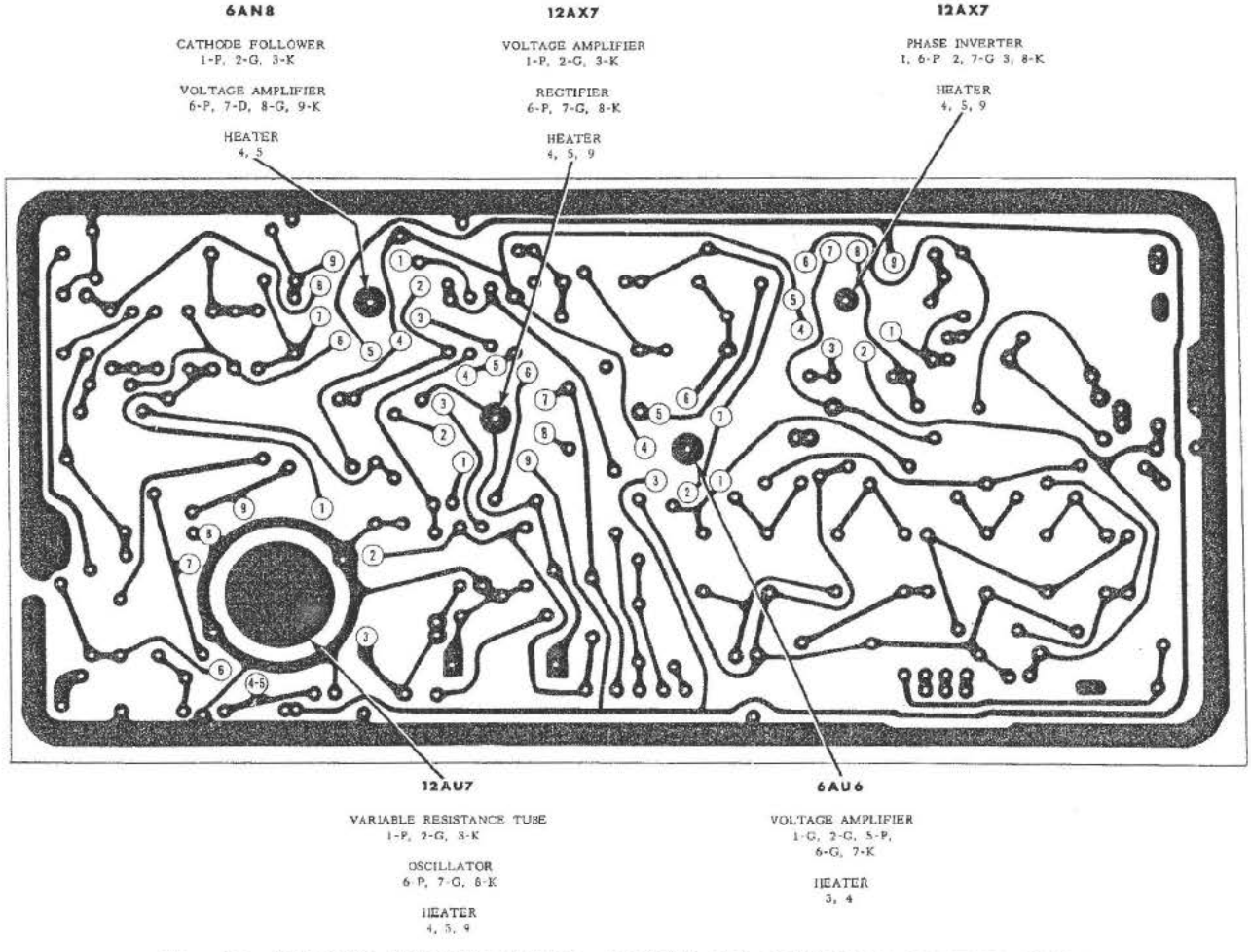

Fig. 93 PRINTED CIRCUIT BOARD - MODEL 536 AMPLIFIER (UNDER SIDE)

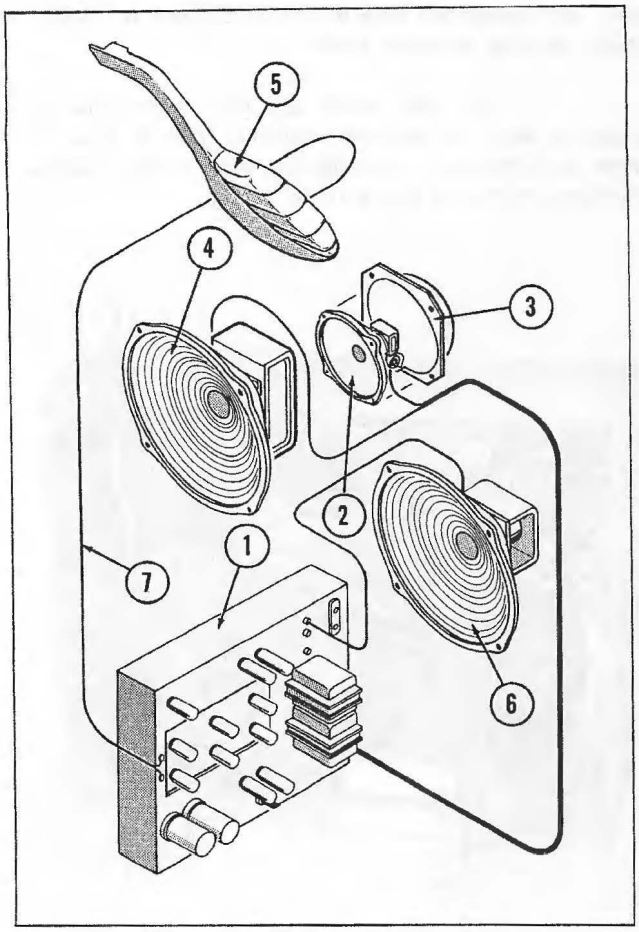

Fig. 94. SOUND SYSTEM - STEREO

1.	Amplifier, 538 Less Tubes	116181
2.	Speaker, 7"	114054
3.	Cover, 7" Speaker	114058
4.	Speaker, 12" Heavy Duty	114006
5.	Tone Arm Assembly	116167
6.	Speaker, 12" Mid Range	65192
7.	Input Cable Assembly (2)	110190

(3) The center set of contacts forming the single pole double throw section serves to stop the changer motor when the record is in play position and to close a dynamic brake circuit across the motor armature.

(4) The right hand set of contacts are normally closed and places a D.C. voltage to the time constant circuit of the automatic level control reducing the output during record changing phases. The switch opening at play position allows a gradual build-up in signal strength to the pre-set level of the manual loudness control.

(5) Current for the heater elements of the amplifier tubes is supplied from two separate power transformers. The filament windings of these transformers are connected in series and in phase. When in stand-by condition the power transformer (T-1) shown on wiring diagram 116396-2 is not energized, however the junction power transformer (T-2) is on at this time providing partial heater current to the tubes. When a selection is made transformer (T-1) becomes energized through the contact closing on the over-ride relay quickly bringing the amplifier tubes to normal temperature for playing as soon as a record is in play position.

c. STEREO SOUND SYSTEM

The stereo dual channel amplifier (Fig. 95) operates in conjunction with the Sonotone stereo pick-up, therefore it will be noted by referring to the block diagram (Fig. 98) that the radio frequency oscillator employed with the 536 amplifier is not used. The audio signal from both circuits of the Stereo Cartridge is fed directly to the grids of the 7025 tubes of Channel A and Channel B.

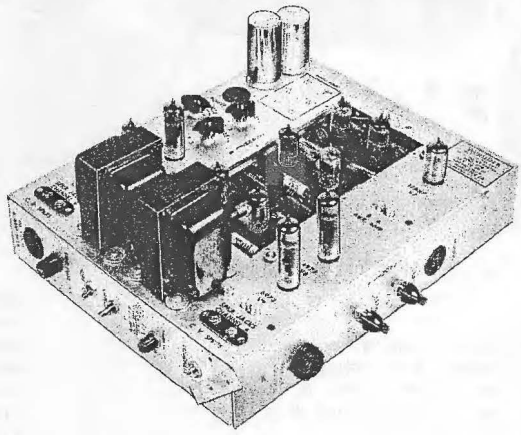

Fig. 95. MODEL 538 STEREO AMPLIFIER, LESS TUBES 116181

(1) THEORY OF OPERATION

(a) The signal is amplified in the first section of the 7025 tubes after which a portion is taken from channel A and fed to the voltage amplifier section of the 12AX7 tube. The second section of the 12AX7 rectifies this audio signal resulting in a varying D.C. voltage which is applied to the time constant circuit at the grids of the variable resistance section of both 12AU7 tubes. Thus the signal from channel A is used to control the level of both channel A and B. After passing through the cathode follower section of the 7025 tubes the loudness control governs the output of the amplifier. The tone controls on both channels are wired between the voltage amplifier section of the 12AU7 tubes and the 12AX7 phase inverters.

(b) The balance control, common to both channels, is wired between the input grids of the 12AX7 phase inverters and serves to equalize the output level between channel A and B. It should be adjusted, after auxiliary speakers have been connected, by listening to a monophonic record. Good stereo reproduction requires that the channels be balanced.

(c) The 12AX7 phase inverters drive two 6973 output tubes in a push pull circuit providing 18 watts of power at each channel. A variable feed-back circuit is employed, as on the 536 amplifier, for maximum output with minimum distortion under varying speaker loads.

(d) The mute and play switch is the same as used on the 536 amplifier and is wired to mute both channels. Wiring diagram 116396-1 shows the connections for this switch.

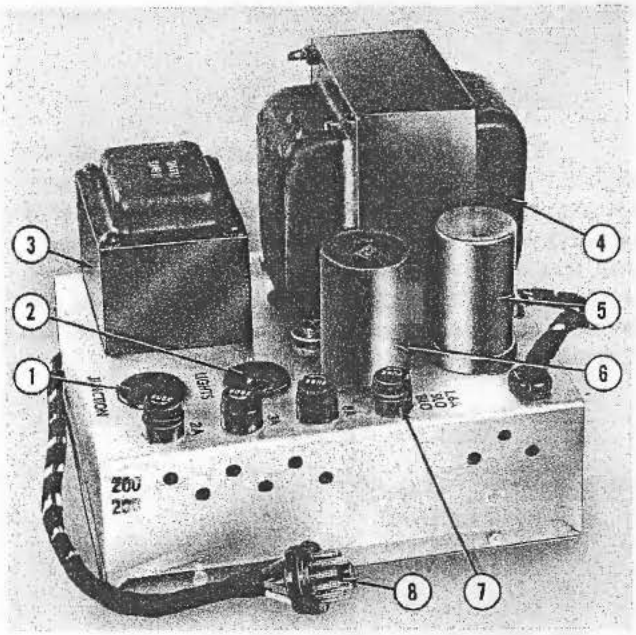

Fig. 96. POWER SUPPLY, STEREO, TOP SIDE

1. Socket, 11 Pin	38492
2. Socket	13037
3. Transformer, Amplifier Power	116645
4. Transformer, Low Voltage	116644
5. Capacitor, 20 Mfd., 250 W.V.	71594
6. Capacitor, 100 Mfd., 250 W.V.	71595
7. Fuse Post (4)	51485
8. Plug, 12 Pin	114324
Fuses used	
1.6A Slow Blow	71591-15
2.0A	71591-19
3.0A	71590-22
8.0A	71590-33

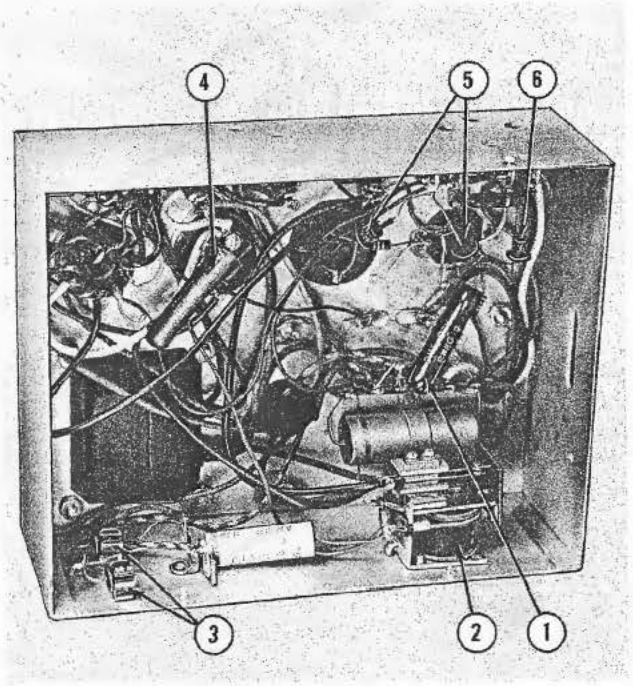

Fig. 97. POWER SUPPLY, STEREO, UNDER SIDE

1. Resistor, 8 Ohm, 10W.	73476-2
2. Relay, Over-ride	56321
3. Rectifier, Silicon Diode (2), Red	71588-3
4. Resistor, 1.5 Ohm, 10W.	73479-2
5. Rectifier, Silicon Diode (2), Green	71588-2
6. Rectifier, Silicon Diode, Brown	71588-1

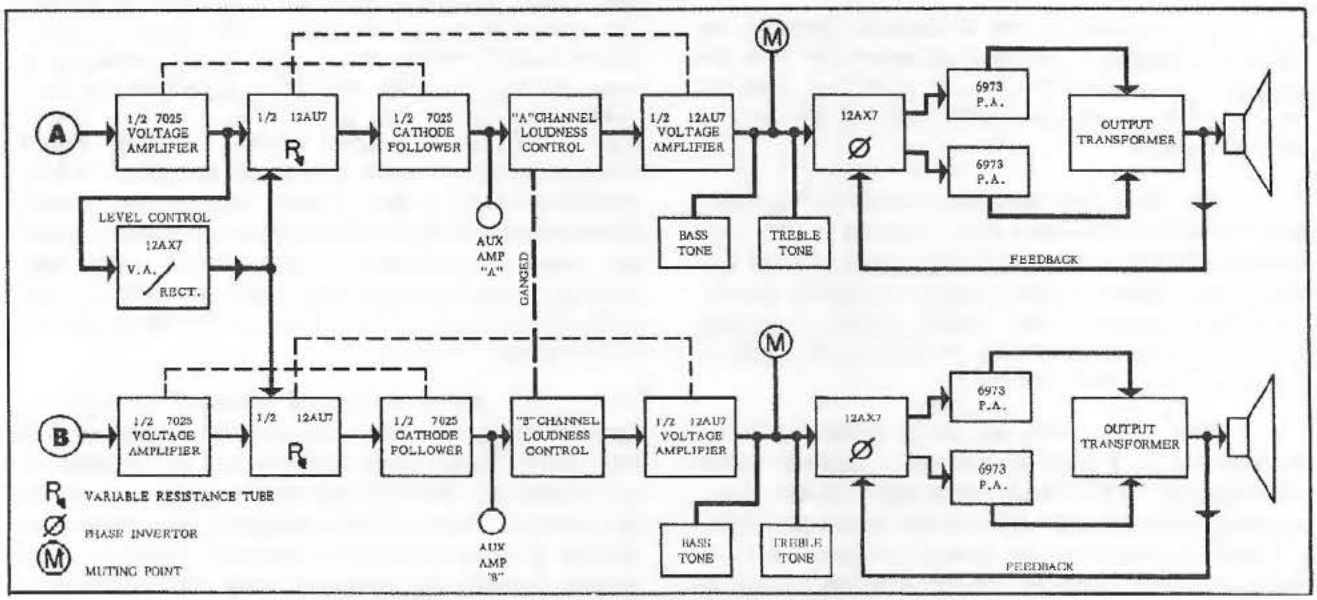

Fig. 98. MODEL 538 AMPLIFIER BLOCK DIAGRAM FOR SIGNAL TRACING

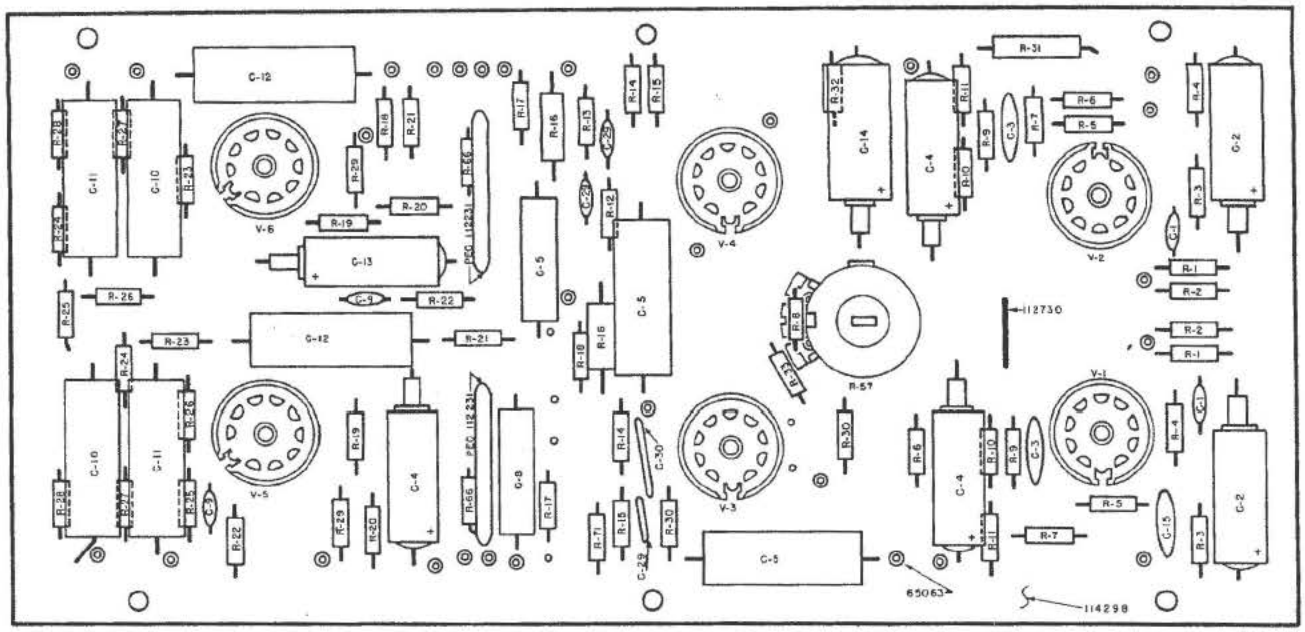

NOTE: For Code Values See Schematic Diagram 116479

Fig. 99 PRINTED CIRCUIT BOARD - MODEL 538 DUAL CHANNEL AMPLIFIER (TOP SIDE)

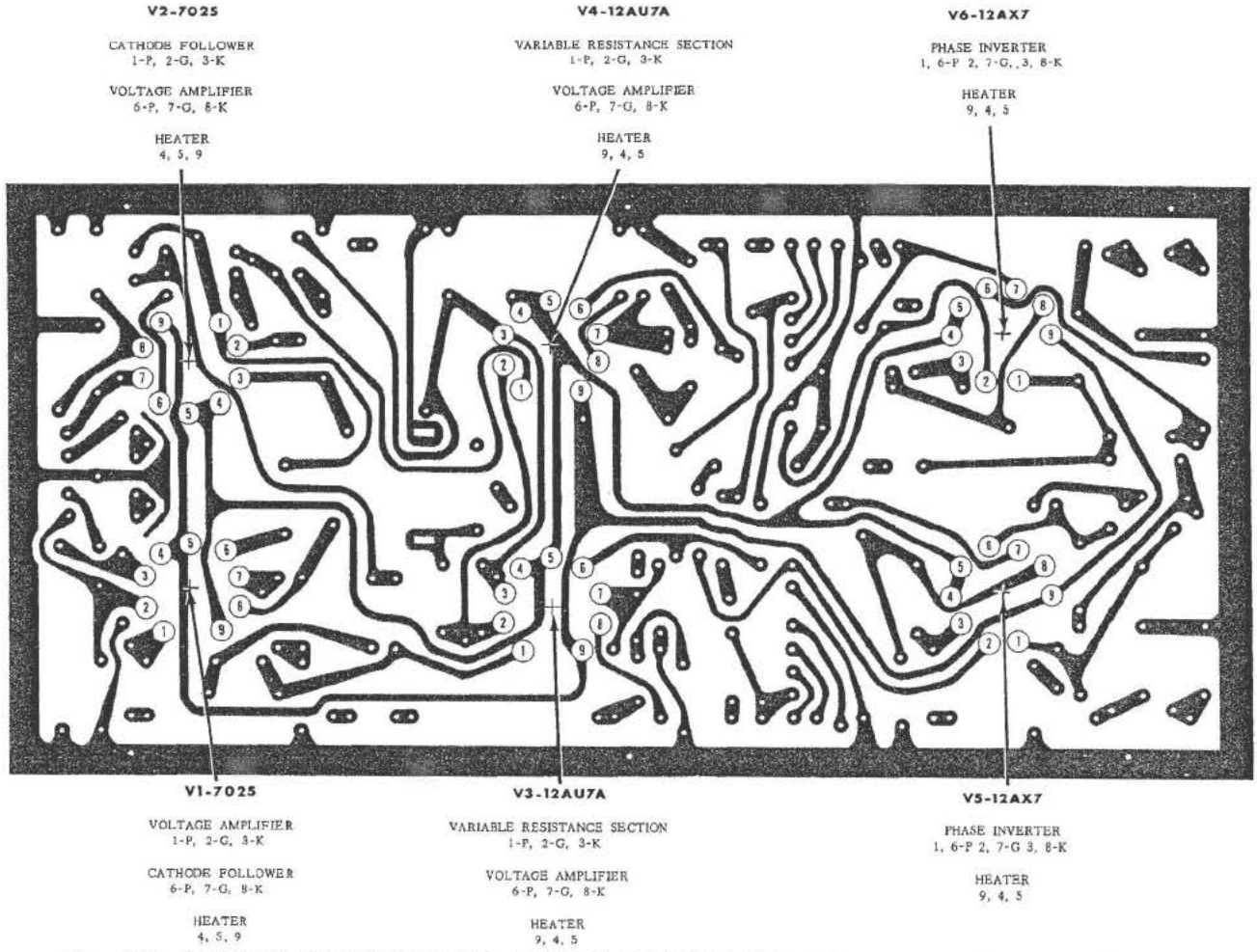

Fig. 100 PRINTED CIRCUIT BOARD - MODEL 538 DUAL CHANNEL AMPLIFIER (UNDER SIDE)

2. POWER SUPPLY

The stand-by heater circuit for the amplifier tubes is the same as on the 536 amplifier. The transformer (Fig. 96, Item 4) is the phonograph junction power and will be energized during the normal at rest position of the phonograph. Its filament winding in phase and in series with the filament winding on the amplifier power transformer (Item 3) provides partial current to the filaments. When a selection is made the transformer (Item 3) will be energized by the closing of the over-ride relay contacts quickly bringing the tubes to playing temperature by the time the record is in playing position. The transformer (Item 3) also supplies, in conjunction with the three Silicon Diode Rectifiers (Fig. 97, Items 5 and 6), the high voltage for the amplifier tubes.

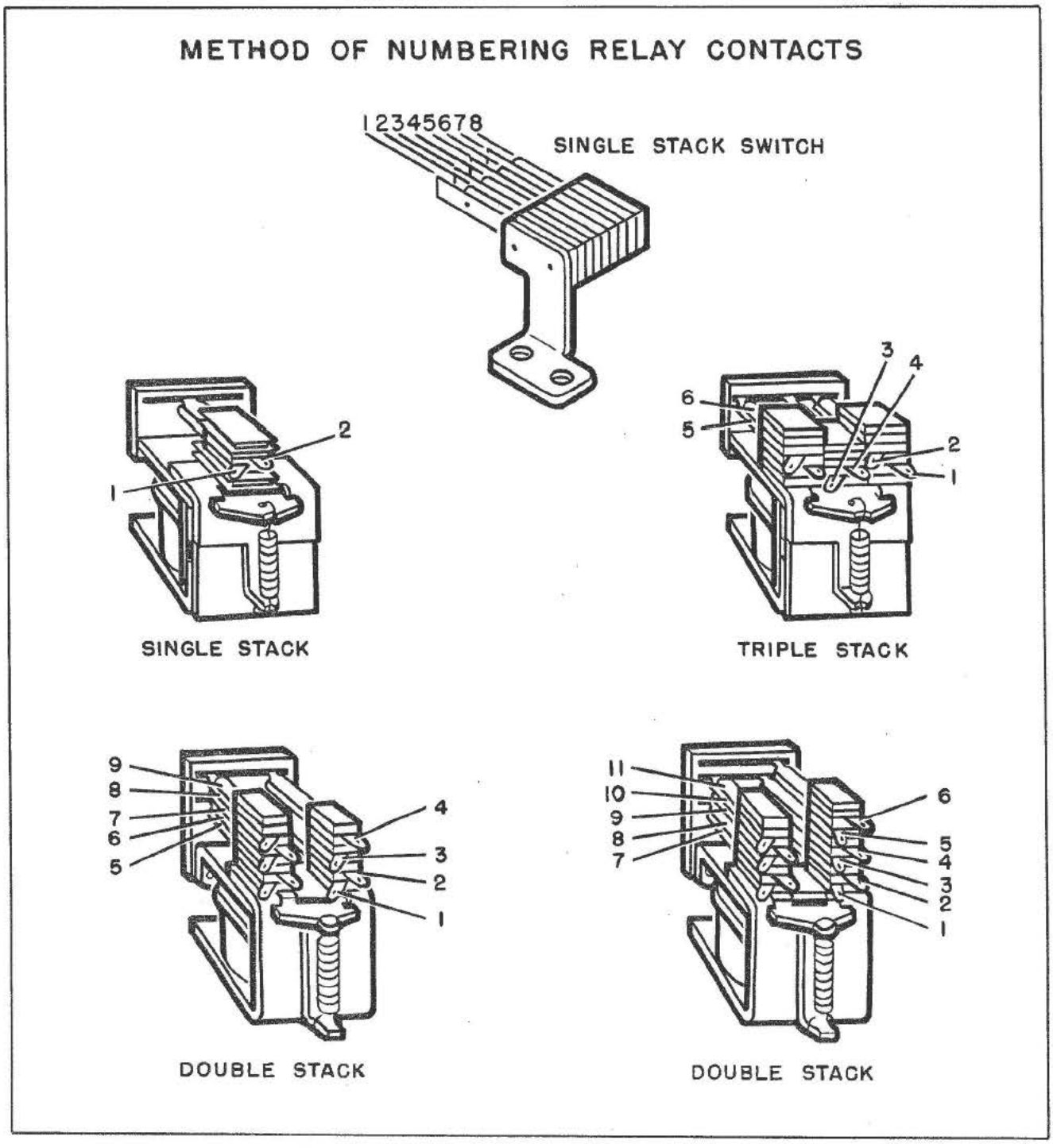

Fig. 101. METHOD OF NUMBERING RELAY CONTACTS

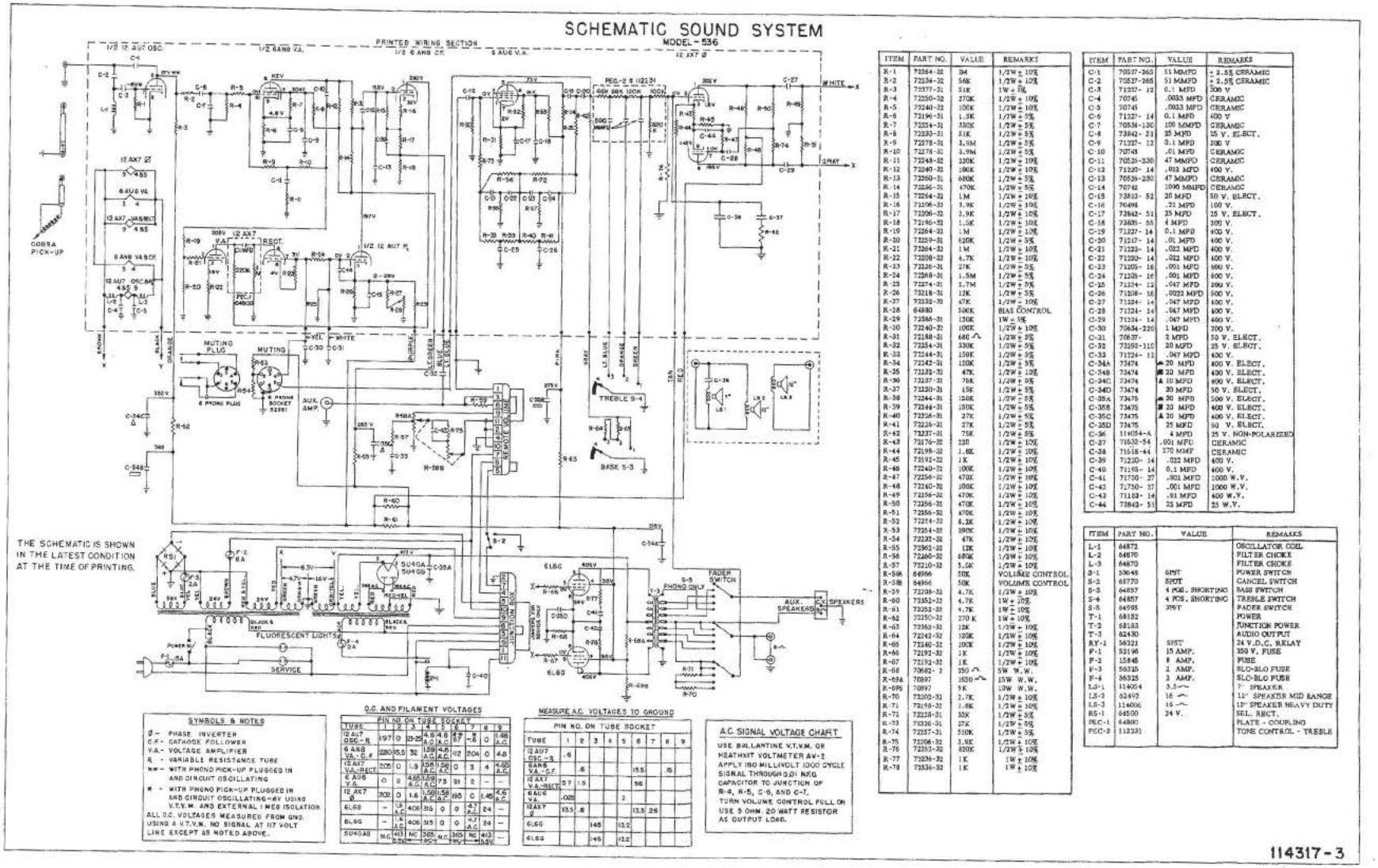

ITEM	PART NO.	VALUE	REMARKS
R-1	72264-32	1M	1/2W ± 10%
R-2	72234-32	56K	1/2W ± 10%
R-3	72377-31	51K	1W ± 5%
R-4	72250-32	270K	1/2W ± 10%
R-5	72240-32	100K	1/2W ± 10%
R-6	72196-31	1.5K	1/2W ± 5%
R-7	72234-31	330K	1/2W ± 5%
R-8	72233-31	51K	1/2W ± 5%
R-9	72278-31	3.9M	1/2W ± 5%
R-10	72278-31	3.9M	1/2W ± 5%
R-11	72248-32	220K	1/2W ± 10%
R-12	72240-32	100K	1/2W ± 10%
R-13	72260-31	680K	1/2W ± 5%
R-14	72256-31	470K	1/2W ± 5%
R-15	72264-32	1M	1/2W ± 10%
R-16	72306-32	3.9K	1/2W ± 10%
R-17	72206-32	3.9K	1/2W ± 10%
R-18	72196-32	1.5K	1/2W ± 10%
R-19	72264-32	1M	1/2W ± 10%
R-20	72259-31	620K	1/2W ± 5%
R-21	72264-32	1M	1/2W ± 10%
R-22	72208-32	4.7K	1/2W ± 10%
R-23	72220-31	27K	1/2W ± 5%
R-24	72268-31	1.5M	1/2W ± 5%
R-25	72274-31	2.7M	1/2W ± 5%
R-26	72216-31	12K	1/2W ± 5%
R-27	72232-32	47K	1/2W ± 10%
R-28	64880	500K	BIAS CONTROL
R-29	72286-31	130K	1W ± 5%
R-30	72240-32	100K	1/2W ± 10%
R-31	72148-31	680 Ω	1/2W ± 5%
R-32	72254-31	330K	1/2W ± 5%
R-33	72244-31	150K	1/2W ± 5%
R-34	72242-31	120K	1/2W ± 5%
R-35	72232-32	47K	1/2W ± 10%
R-36	72237-31	70K	1/2W ± 5%
R-37	72220-31	15K	1/2W ± 5%
R-38	72244-31	150K	1/2W ± 5%
R-39	72244-31	150K	1/2W ± 5%
R-40	72256-31	27K	1/2W ± 5%
R-41	72216-31	27K	1/2W ± 5%
R-42	72237-31	75K	1/2W ± 5%
R-43	72176-32	220	1/2W ± 10%
R-44	72198-32	1.8K	1/2W ± 10%
R-45	72192-32	1K	1/2W ± 10%
R-46	72240-32	100K	1/2W ± 10%
R-47	72256-32	470K	1/2W ± 10%
R-48	72240-32	100K	1/2W ± 10%
R-49	72256-32	470K	1/2W ± 10%
R-50	72256-32	470K	1/2W ± 10%
R-51	72256-32	470K	1/2W ± 10%
R-52	72214-32	8.2K	1/2W ± 10%
R-53	72254-32	390K	1/2W ± 10%
R-54	72232-32	47K	1/2W ± 10%
R-55	72362-32	12K	1/2W ± 10%
R-56	72260-32	680K	1/2W ± 10%
R-57	72216-32	5.6K	1/2W ± 10%
R-58A	64966	50K	VOLUME CONTROL
R-58B	64966	50K	VOLUME CONTROL
R-59	72208-32	4.7K	1/2W ± 10%
R-60	72352-32	4.7K	1W ± 10%
R-61	72352-32	4.7K	1W ± 10%
R-62	72250-32	270 K	1W ± 10%
R-63	72362-32	12K	1/2W ± 10%
R-64	72242-32	120K	1/2W ± 10%
R-65	72240-32	100K	1/2W ± 10%
R-66	72192-32	1K	1/2W ± 10%
R-67	72192-32	1K	1/2W ± 10%
R-68	70962- 2	350 Ω	5W W.W.
R-69A	70897	1650 Ω	15W W.W.
R-69B	70897	5K	10W W.W.
R-70	72202-32	2.7K	1/2W ± 10%
R-71	72198-32	1.8K	1/2W ± 10%
R-72	72238-31	33K	1/2W ± 5%
R-73	72226-31	27K	1/2W ± 5%
R-74	72257-31	510K	1/2W ± 5%
R-75	72206-32	3.9K	1/2W ± 10%
R-76	72252-32	820K	1/2W ± 10%
R-77	72236-32	1K	1W ± 10%
R-78	72236-32	1K	1W ± 10%

ITEM	PART NO.	VALUE	REMARKS
C-1	70537-265	51 MMFD	± 2.5% CERAMIC
C-2	70537-265	51 MMFD	± 2.5% CERAMIC
C-3	71227- 12	0.1 MFD	200 V
C-4	70745	.0033 MFD	CERAMIC
C-5	70745	.0033 MFD	CERAMIC
C-6	71227- 14	0.1 MFD	400 V
C-7	70534-130	100 MMFD	CERAMIC
C-8	73842- 51	25 MFD	25 V. ELECT.
C-9	71227- 12	0.1 MFD	200 V
C-10	70745	.01 MFD	CERAMIC
C-11	70535-230	47 MMFD	CERAMIC
C-12	71229- 14	.022 MFD	400 V.
C-13	70535-230	47 MMFD	CERAMIC
C-14	70742	1000 MMFD	CERAMIC
C-15	73810- 52	20 MFD	50 V. ELECT.
C-16	70498	.22 MFD	100 V.
C-17	73842- 51	25 MFD	25 V. ELECT.
C-18	73835- 53	4 MFD	200 V.
C-19	71227- 14	0.1 MFD	400 V.
C-20	71217- 14	.01 MFD	400 V.
C-21	71229- 14	.022 MFD	400 V.
C-22	71229- 14	.022 MFD	400 V.
C-23	71205- 16	.001 MFD	600 V.
C-24	71205- 16	.001 MFD	600 V.
C-25	71224- 12	.047 MFD	200 V.
C-26	71216- 16	.0022 MFD	600 V.
C-27	71224- 14	.047 MFD	400 V.
C-28	71224- 14	.047 MFD	400 V.
C-29	71224- 14	.047 MFD	400 V.
C-30	70634-220	1 MFD	200 V.
C-31	70637-	2 MFD	50 V. ELECT.
C-32	73190-110	20 MFD	25 V. ELECT.
C-33	71224- 12	.047 MFD	400 V.
C-34A	73474	■ 20 MFD	400 V. ELECT.
C-34B	73474	■ 20 MFD	400 V. ELECT.
C-34C	73474	▲ 10 MFD	400 V. ELECT.
C-34D	73474	20 MFD	50 V. ELECT.
C-35A	73475	■ 30 MFD	500 V. ELECT.
C-35B	73475	■ 20 MFD	400 V. ELECT.
C-35C	73475	▲ 20 MFD	400 V. ELECT.
C-35D	73475	25 MFD	50 V. ELECT.
C-36	114054-A	4 MFD	25 V. NON-POLARIZED
C-37	71532-54	.001 MFD	CERAMIC
C-38	71518-44	370 MMF	CERAMIC
C-39	71229- 14	.022 MFD	400 V.
C-40	71219- 14	0.1 MFD	400 V.
C-41	71750- 27	.001 MFD	1000 W.V.
C-42	71750- 27	.001 MFD	1000 W.V.
C-43	71183- 14	.01 MFD	400 W.V.
C-44	73842- 51	25 MFD	25 W.V.

ITEM	PART NO.	VALUE	REMARKS
L-1	64872		OSCILLATOR COIL
L-2	64870		FILTER CHOKE
L-3	64870		FILTER CHOKE
S-1	53645	SPST	POWER SWITCH
S-2	65770	SPDT	CANCEL SWITCH
S-3	64857	4 POS. SHORTING	BASS SWITCH
S-4	64857	4 POS. SHORTING	TREBLE SWITCH
S-5	64995	3PDT	FADER SWITCH
T-1	68182		POWER
T-2	68183		JUNCTION POWER
T-3	62430		AUDIO OUTPUT
RY-1	56321	SPST	24 V.D.C. RELAY
F-1	52196	15 AMP.	250 V. FUSE
F-2	15845	8 AMP.	FUSE
F-3	56325	2 AMP.	SLO-BLO FUSE
F-4	56325	2 AMP.	SLO-BLO FUSE
LS-1	114054	3.5 Ω	7" SPEAKER
LS-2	52492	16 Ω	12" SPEAKER MID RANGE
LS-3	114006	16 Ω	12" SPEAKER HEAVY DUTY
RS-1	64500	24 V.	SEL. RECT.
PEC-1	64800		PLATE - COUPLING
PEC-2	112231		TONE CONTROL - TREBLE

Fig. 102. 536 SOUND SYSTEM . . . . . SCHEMATIC WIRING DIAGRAM

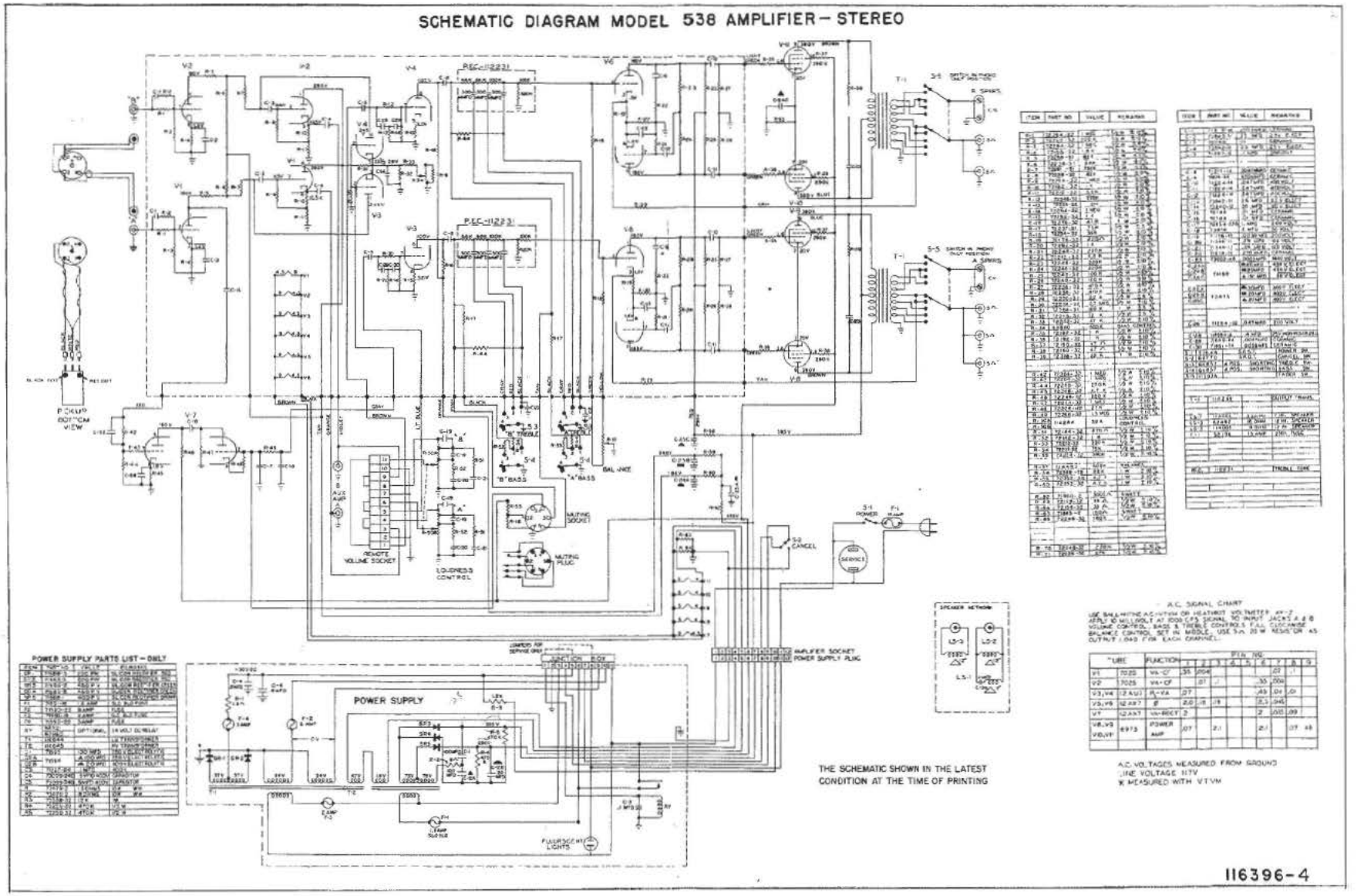

Fig. 103. 538 SOUND SYSTEM . . . . . SCHEMATIC WIRING DIAGRAM

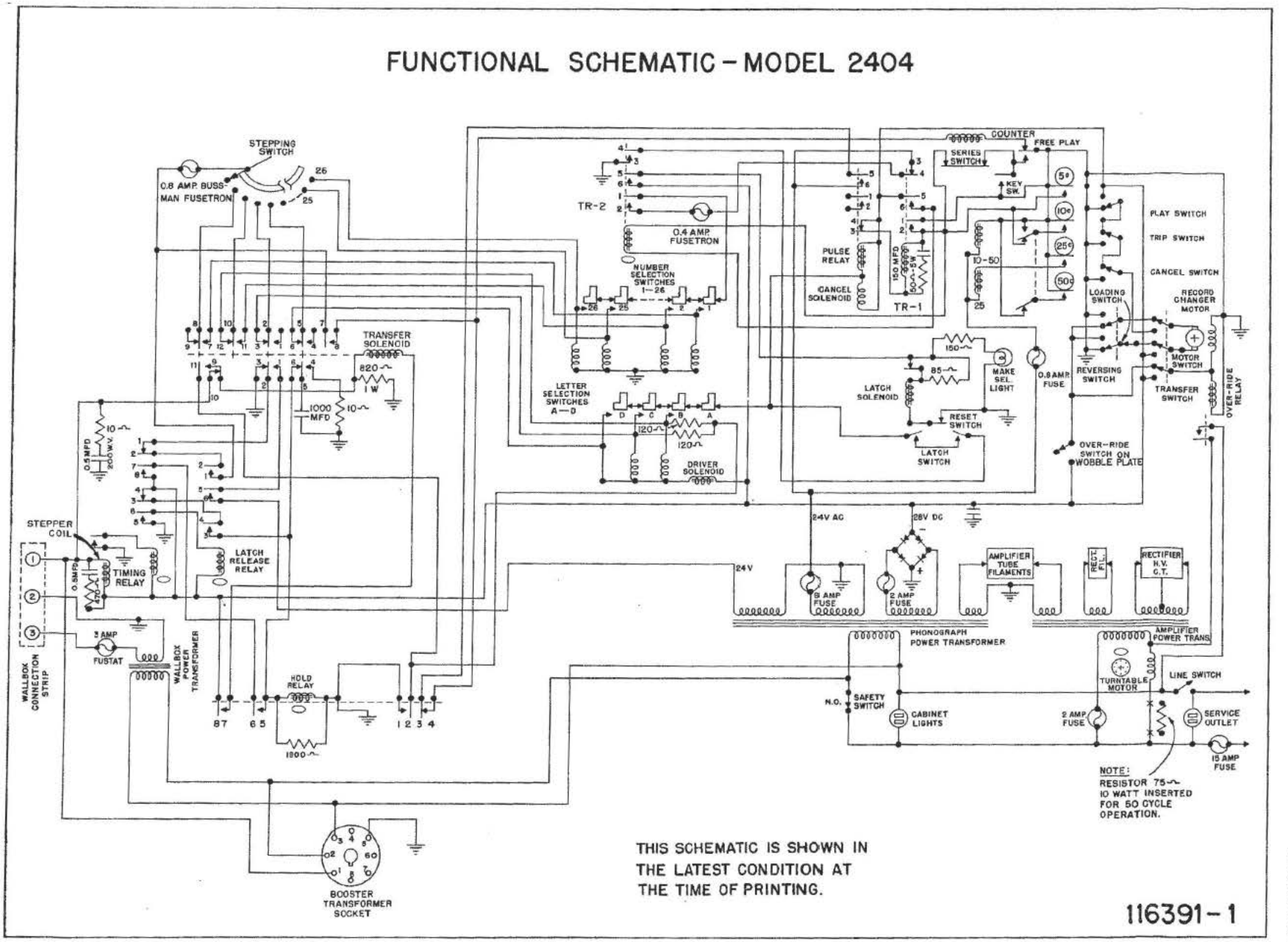

Fig. 104. MODEL 2404 . . . . . FUNCTIONAL SCHEMATIC

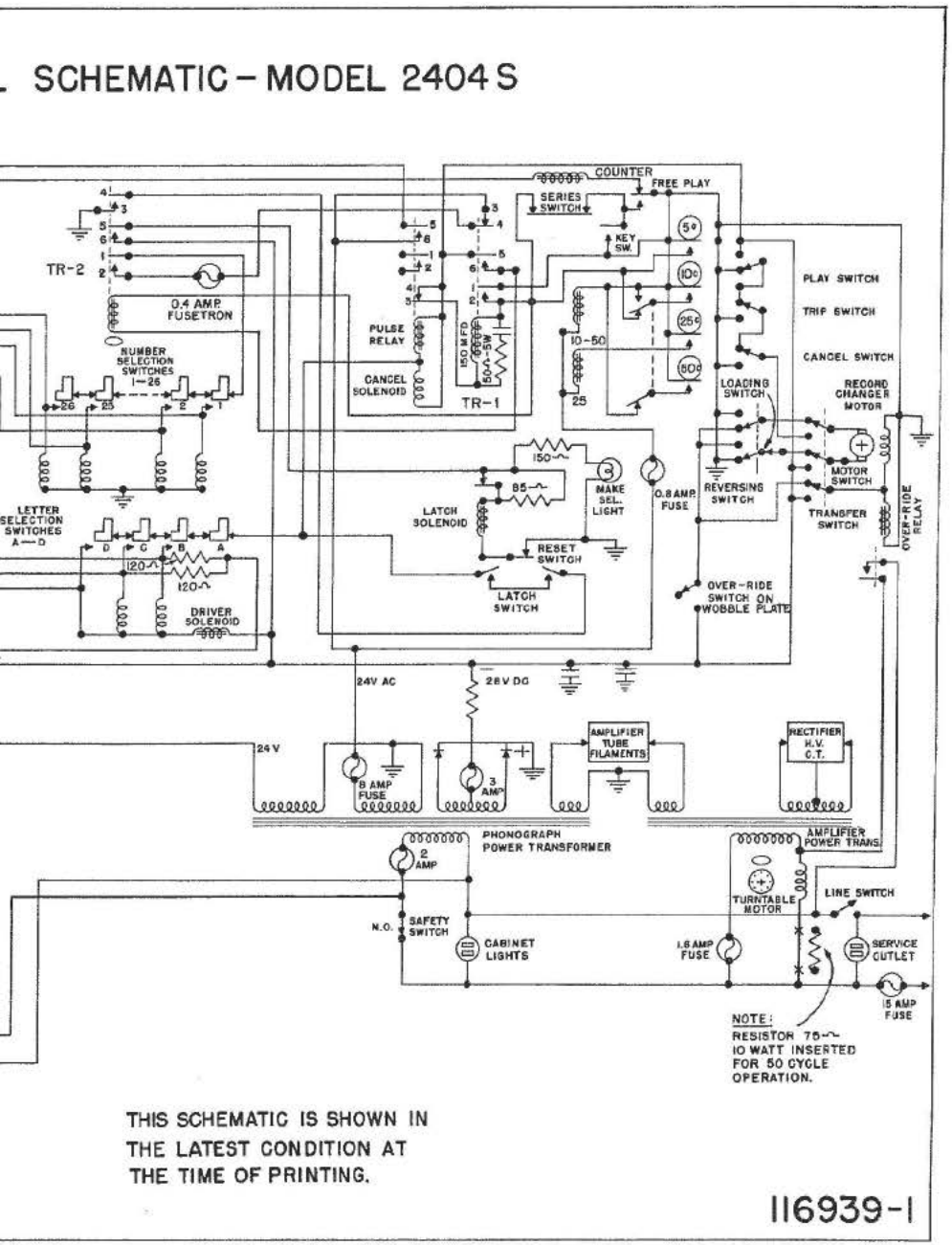

Fig. 105. MODEL 2404S . . . . . FUNCTIONAL SCHEMATIC

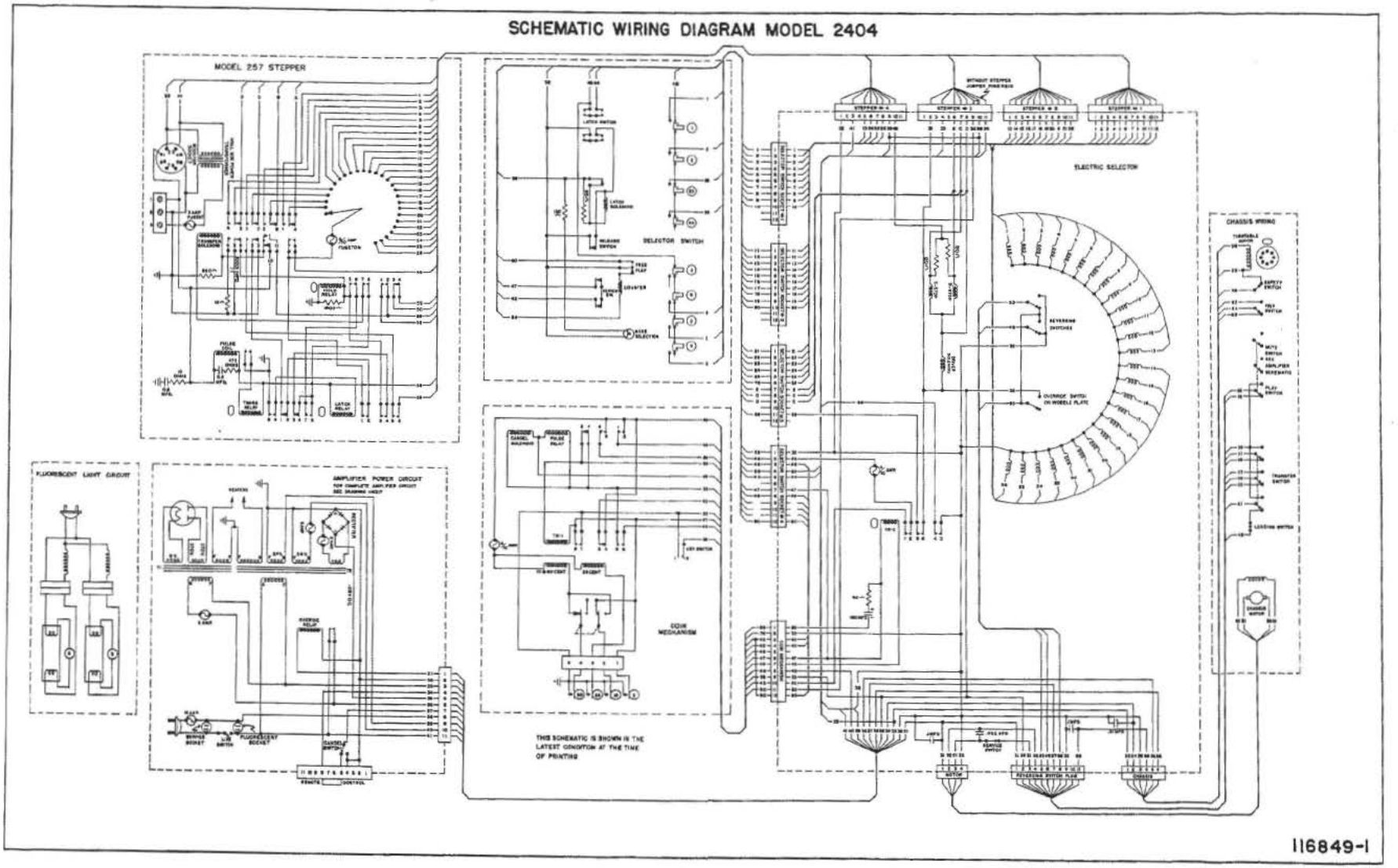

Fig. 106. MODEL 2404 . . . . . WIRING DIAGRAM

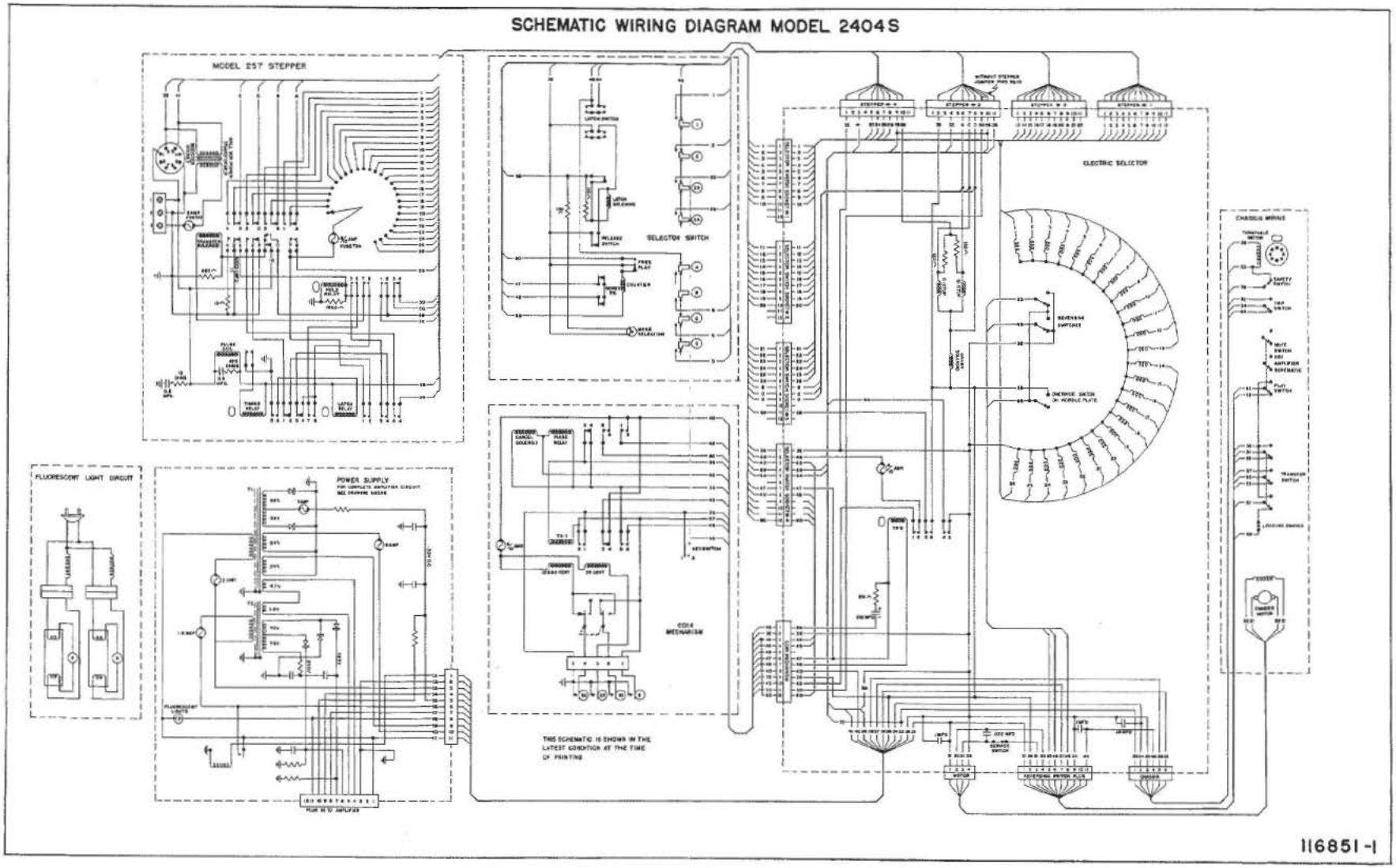

Fig. 107. MODEL 2404S . . . . . WIRING DIAGRAM

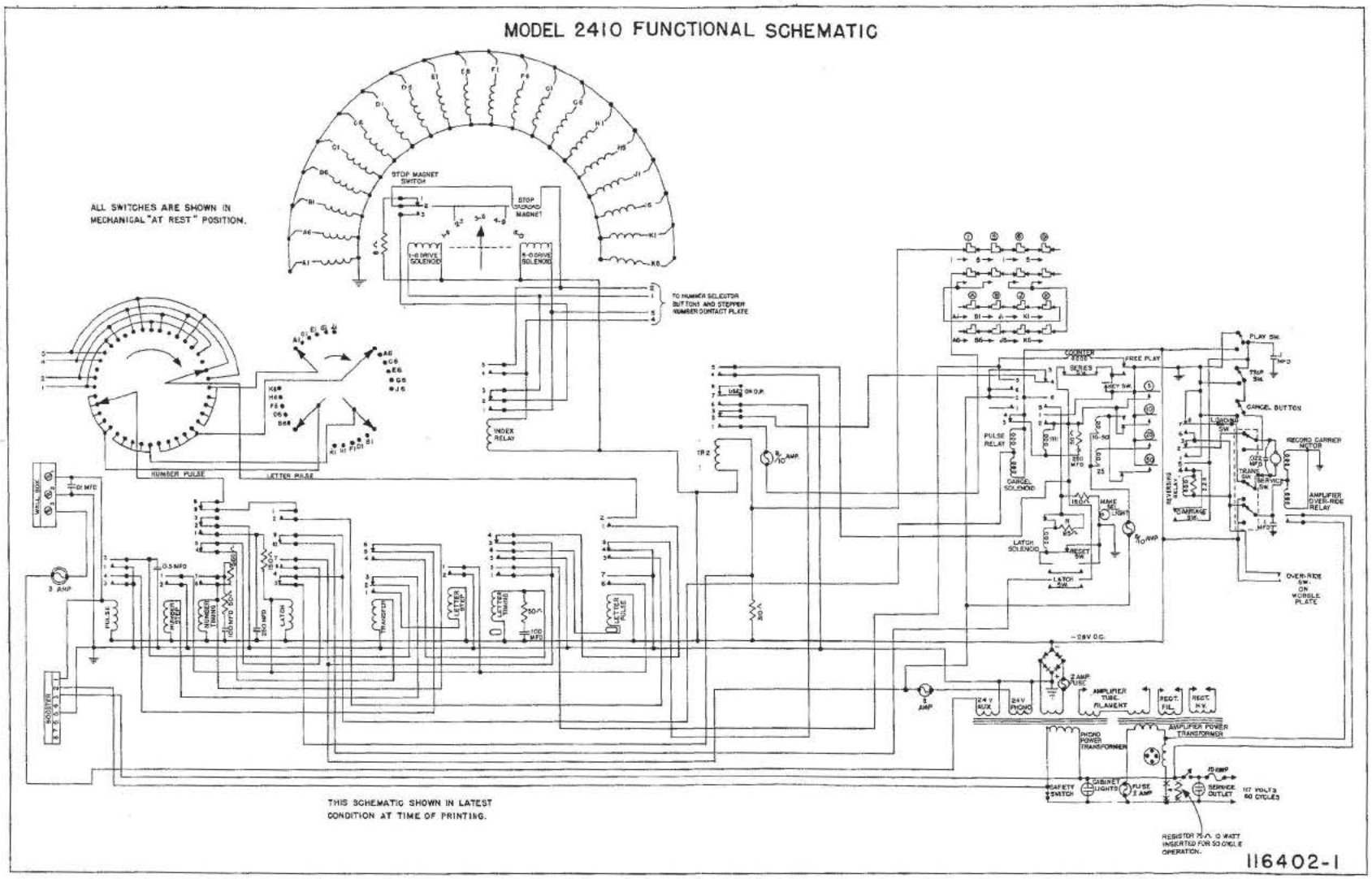

Fig. 108. MODEL 2410 . . . . . FUNCTIONAL SCHEMATIC

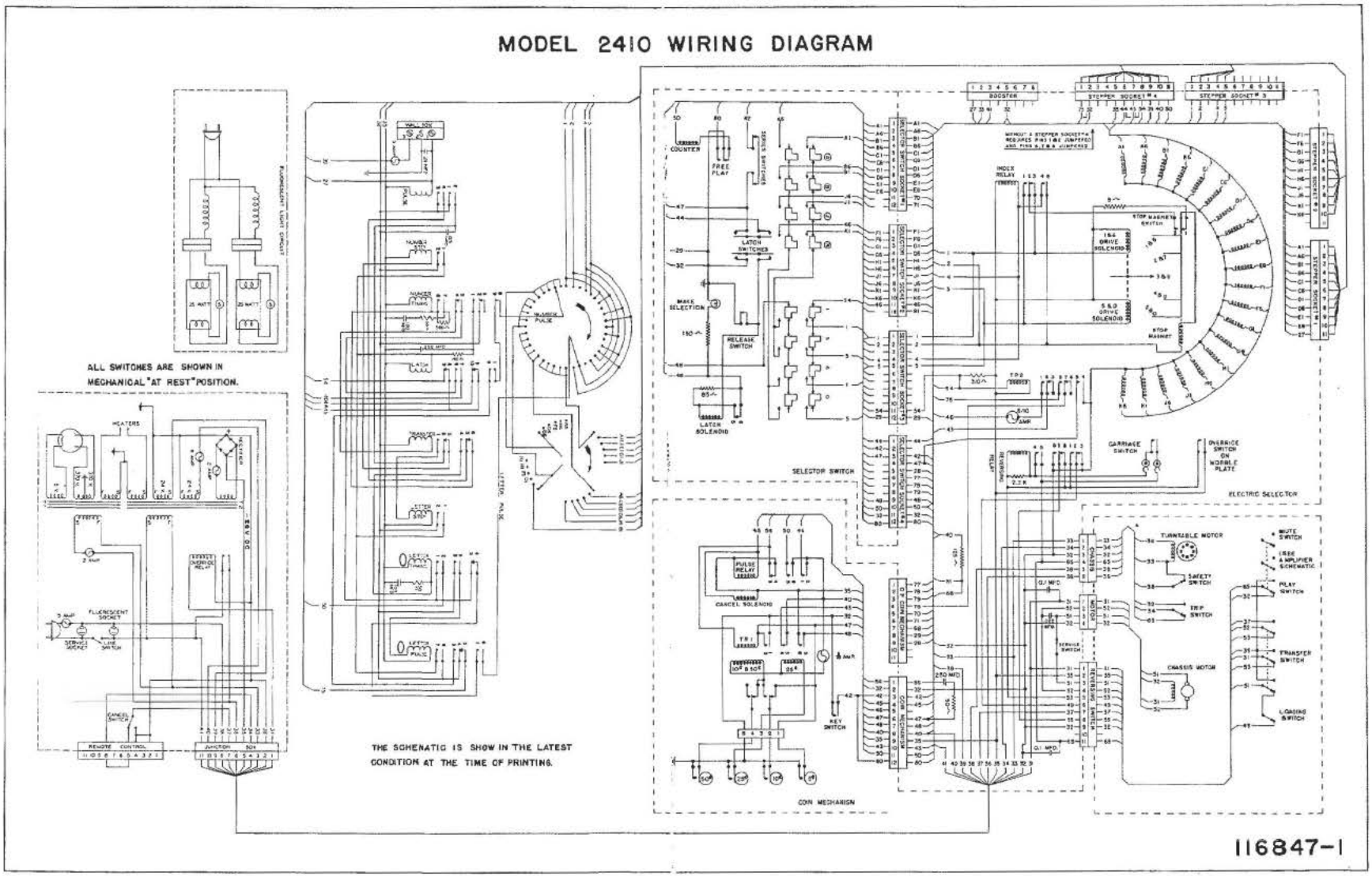

Fig. 109. MODEL 2410 . . . . . WIRING DIAGRAM

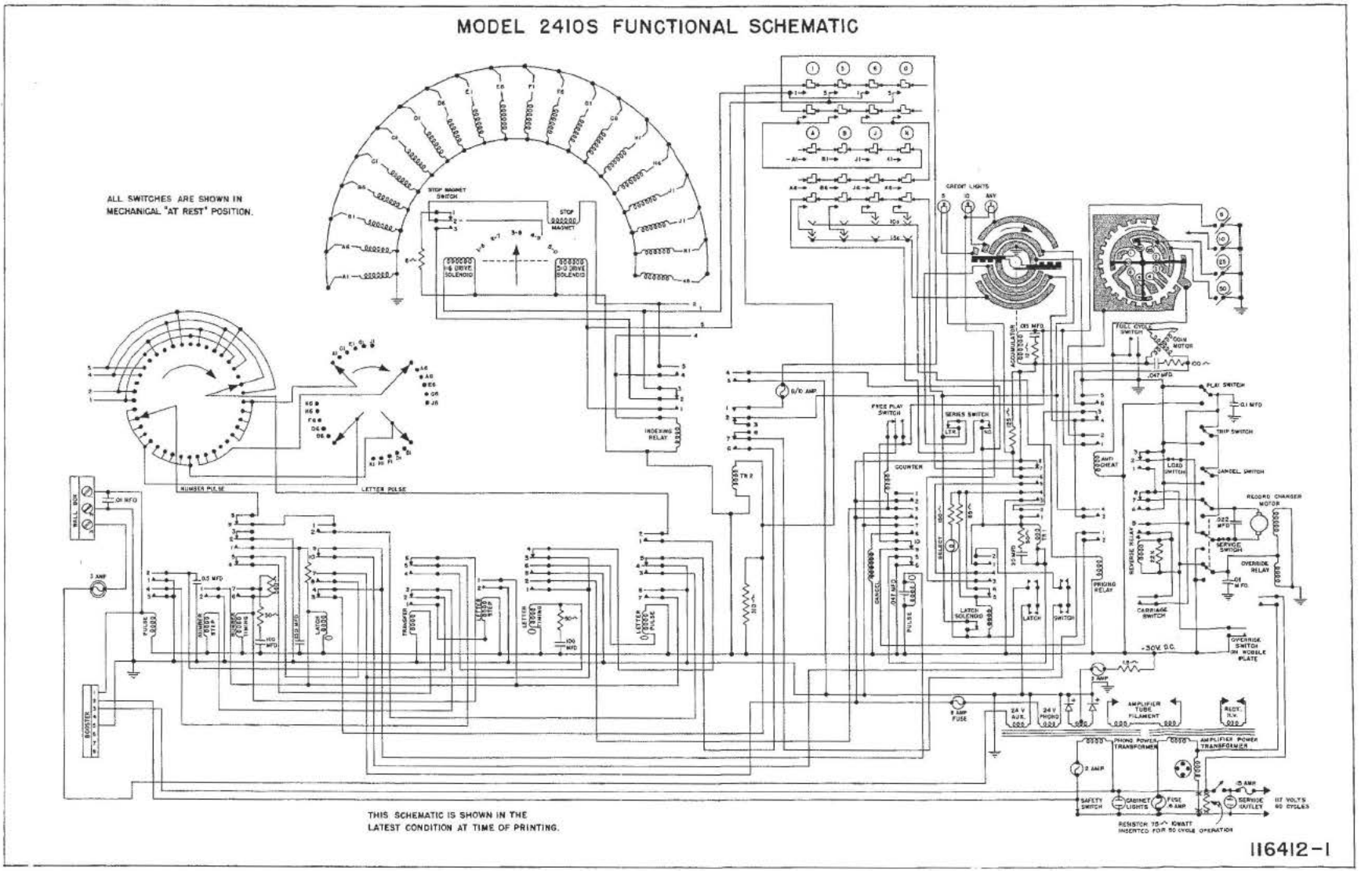

Fig. 110. MODEL 2410S . . . . . FUNCTIONAL SCHEMATIC

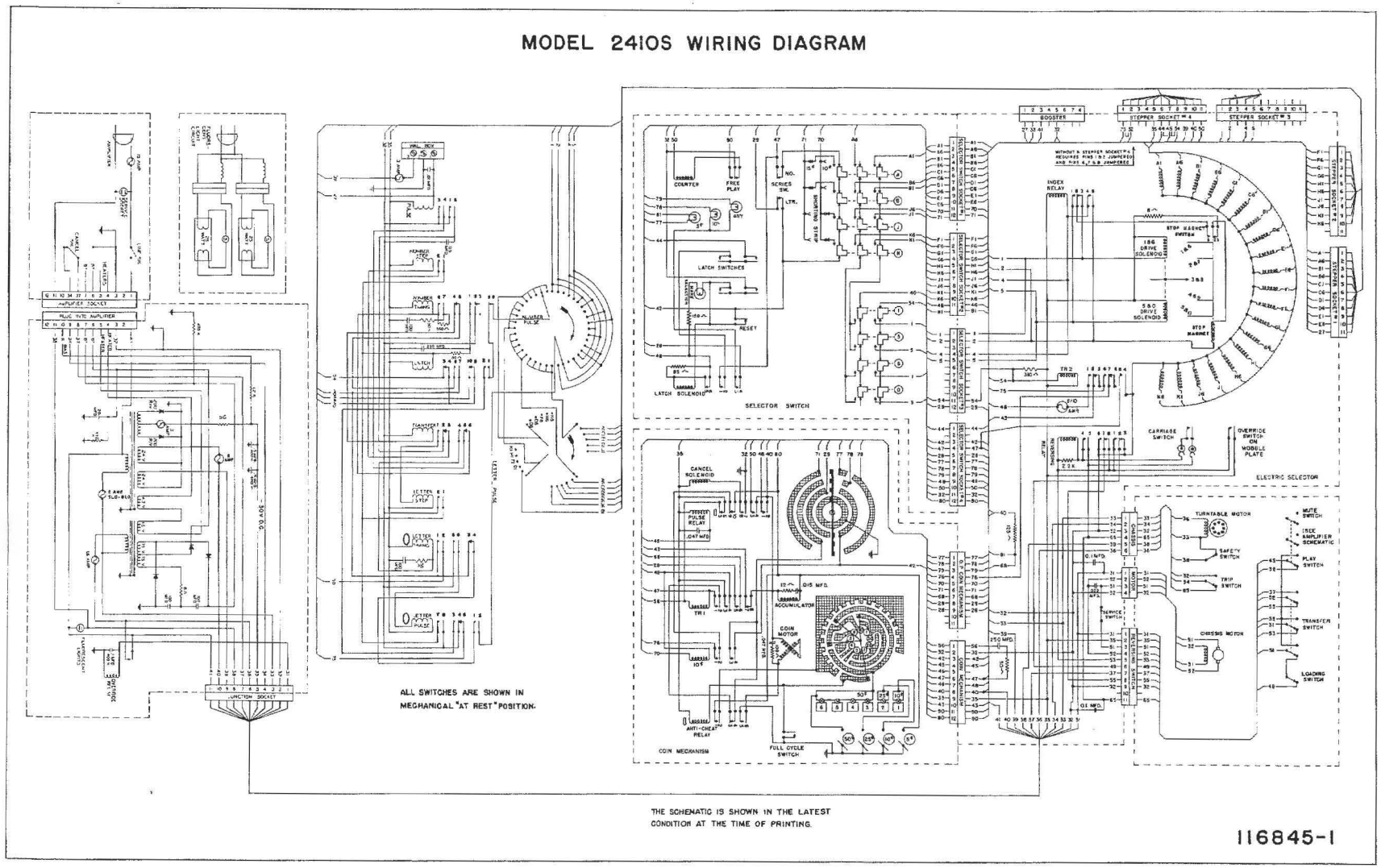

Fig. 111. MODEL 2410S . . . . . WIRING DIAGRAM

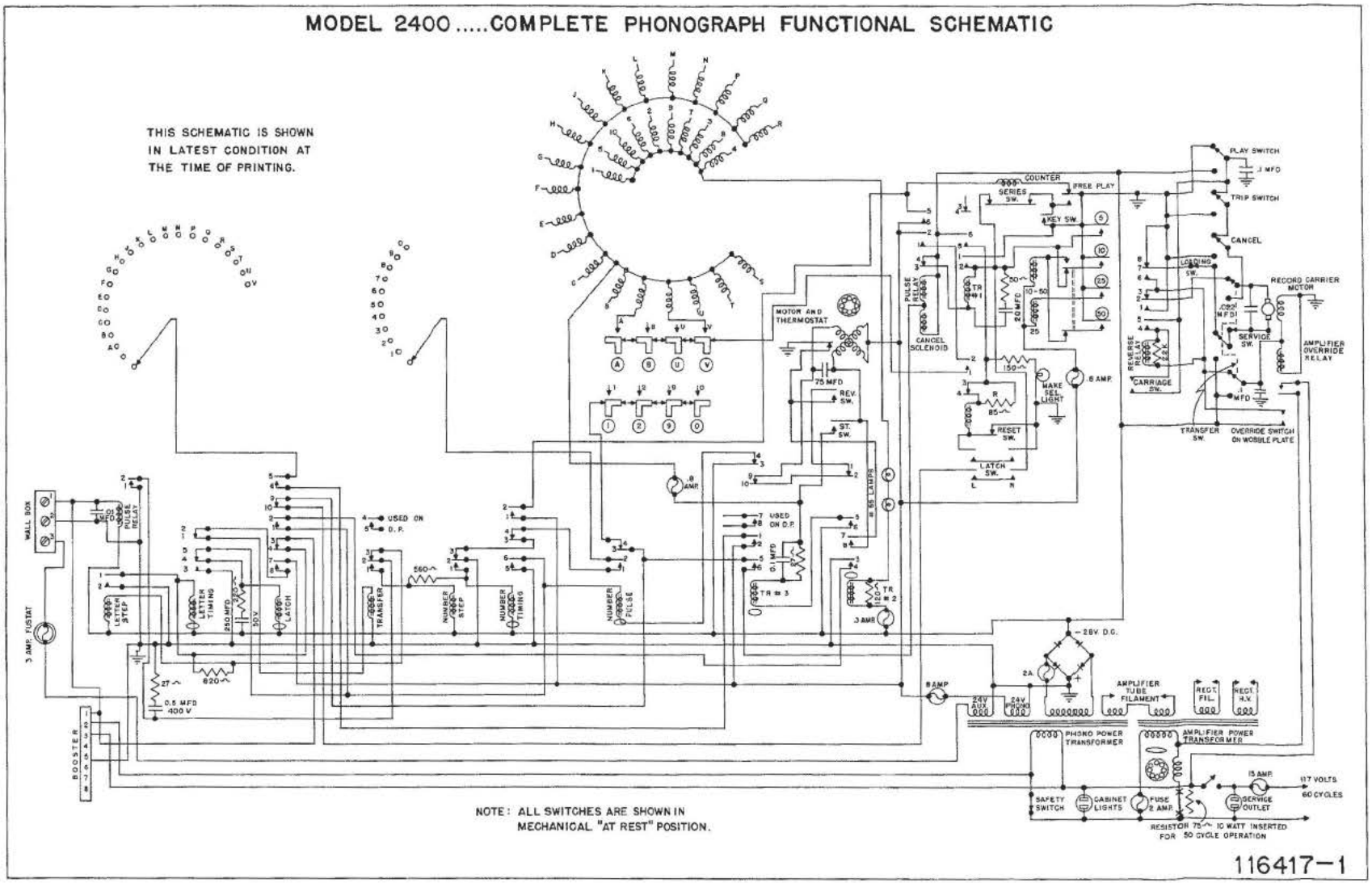

Fig. 112. MODEL 2400 . . . . . FUNCTIONAL SCHEMATIC

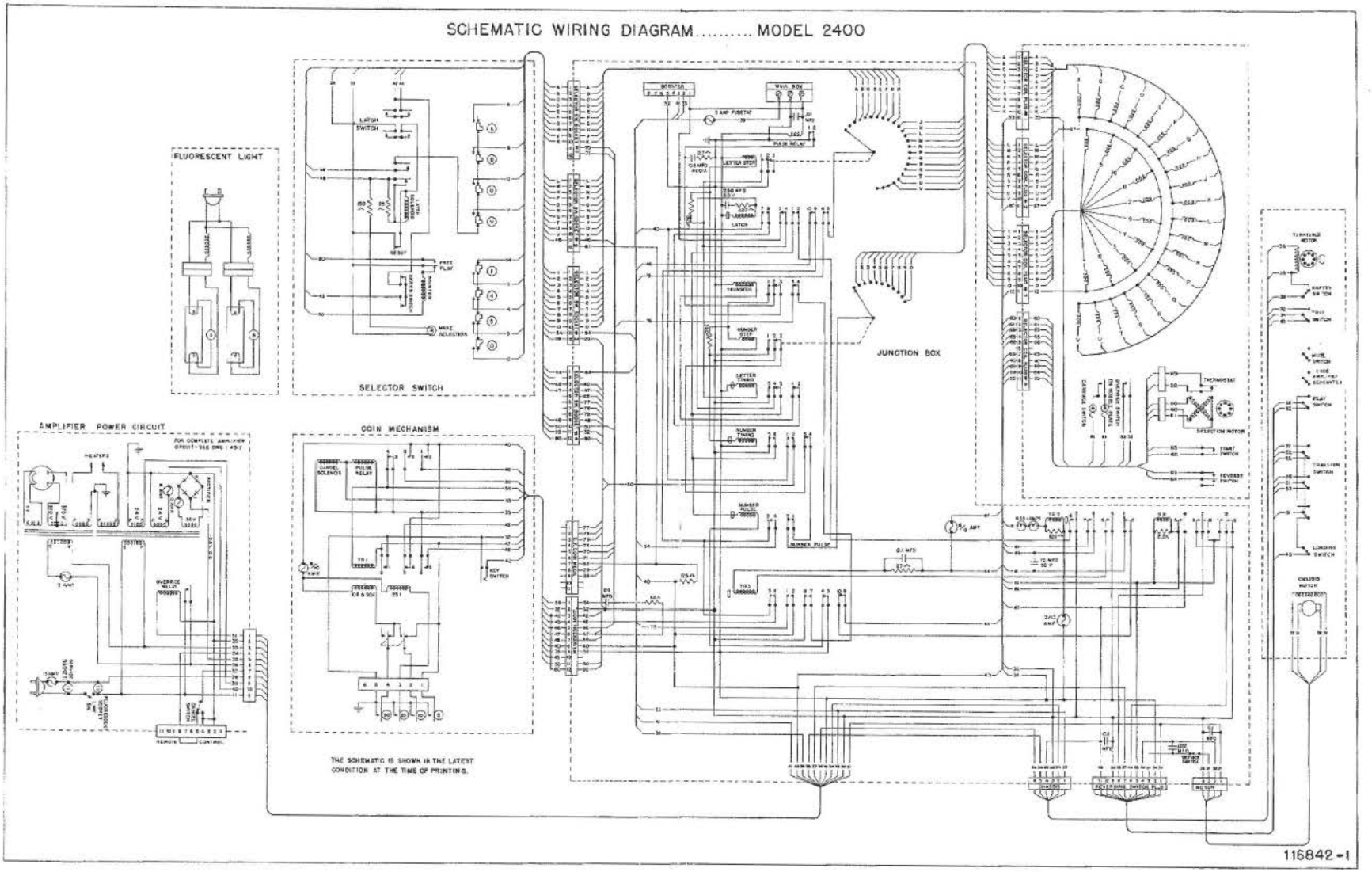

Fig. 113. MODEL 2400 . . . . . WIRING DIAGRAM

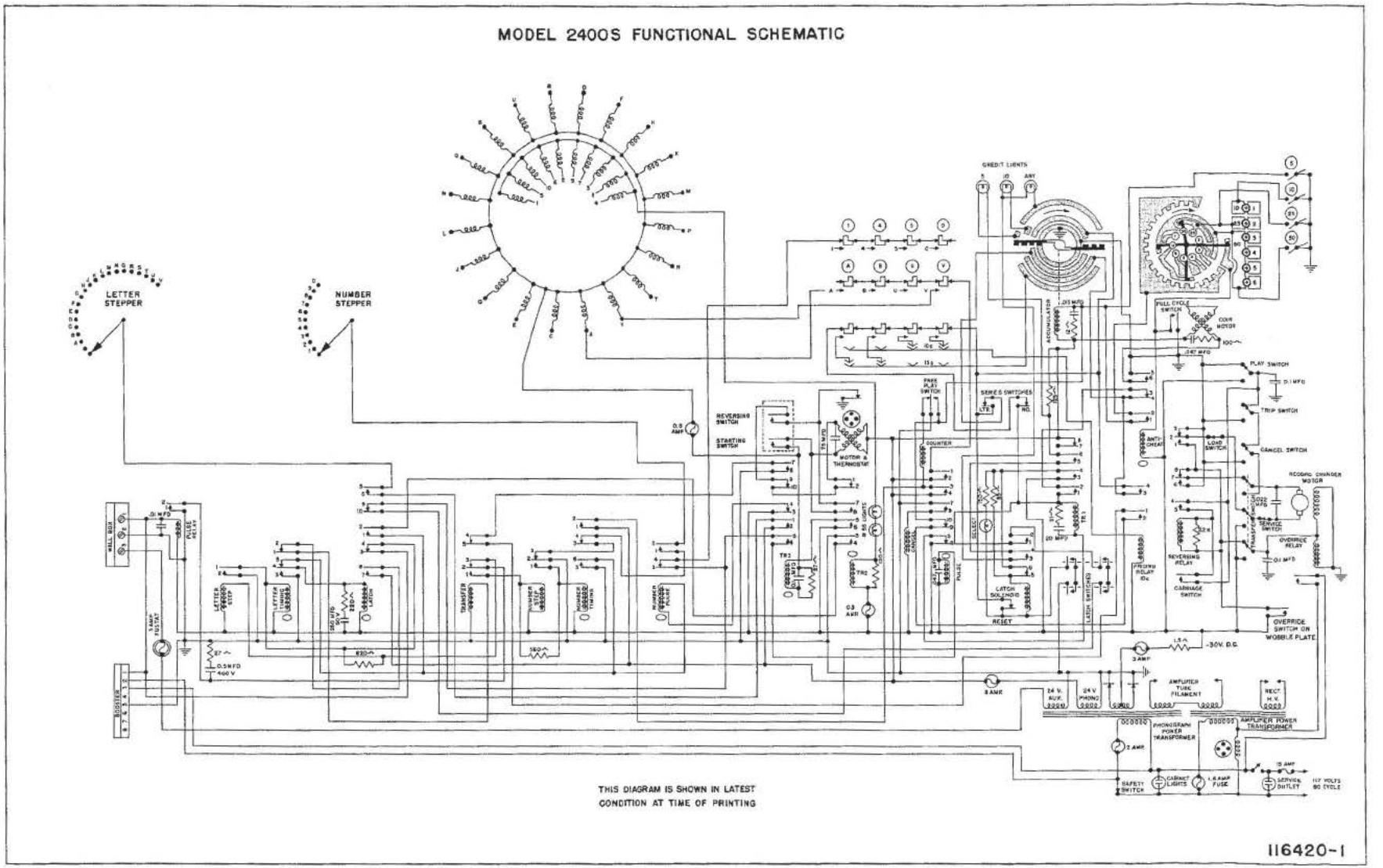

Fig. 114. MODEL 2400S . . . . . FUNCTIONAL SCHEMATIC

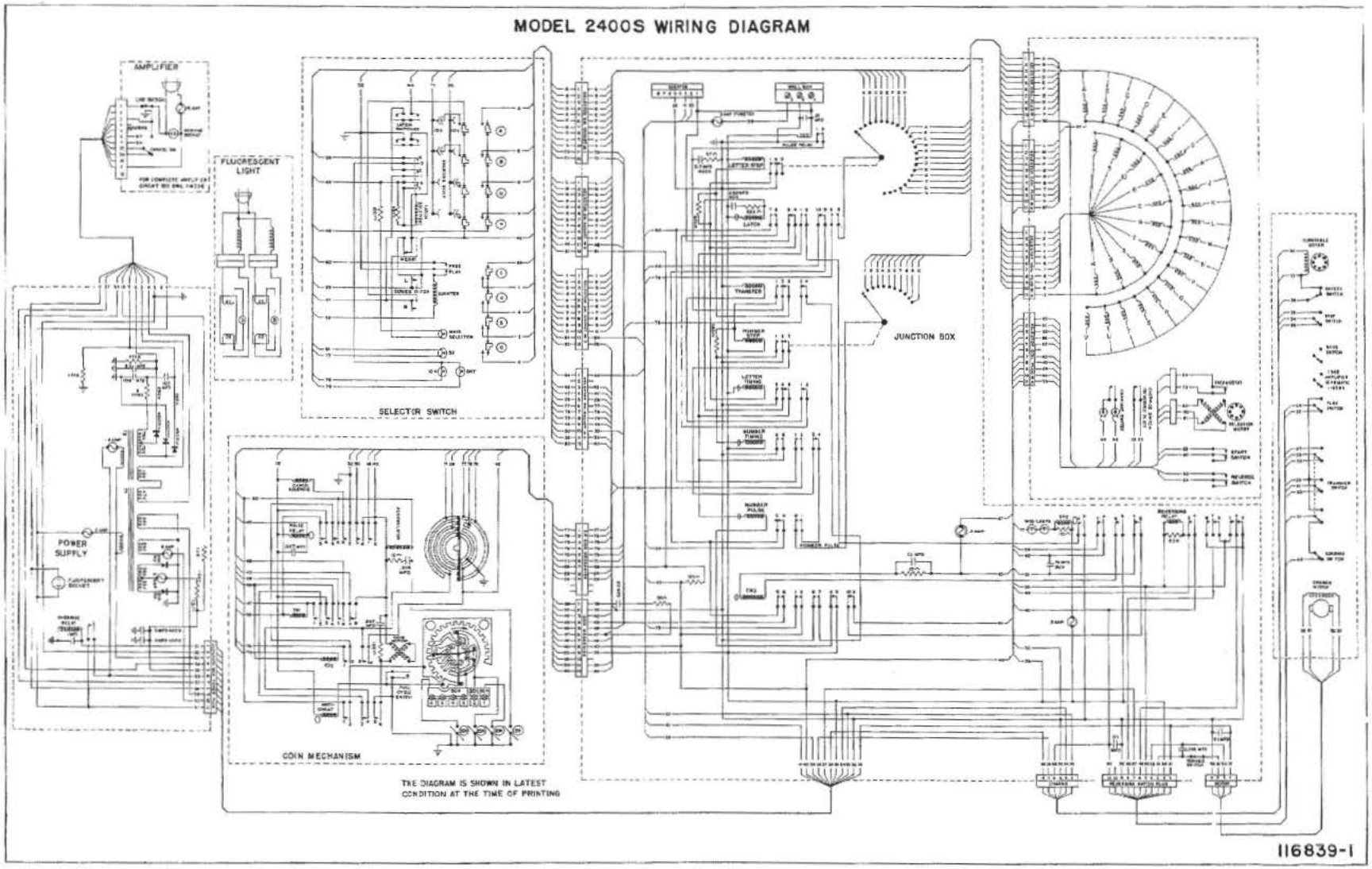

Fig. 115. MODEL 2400S . . . . . WIRING DIAGRAM

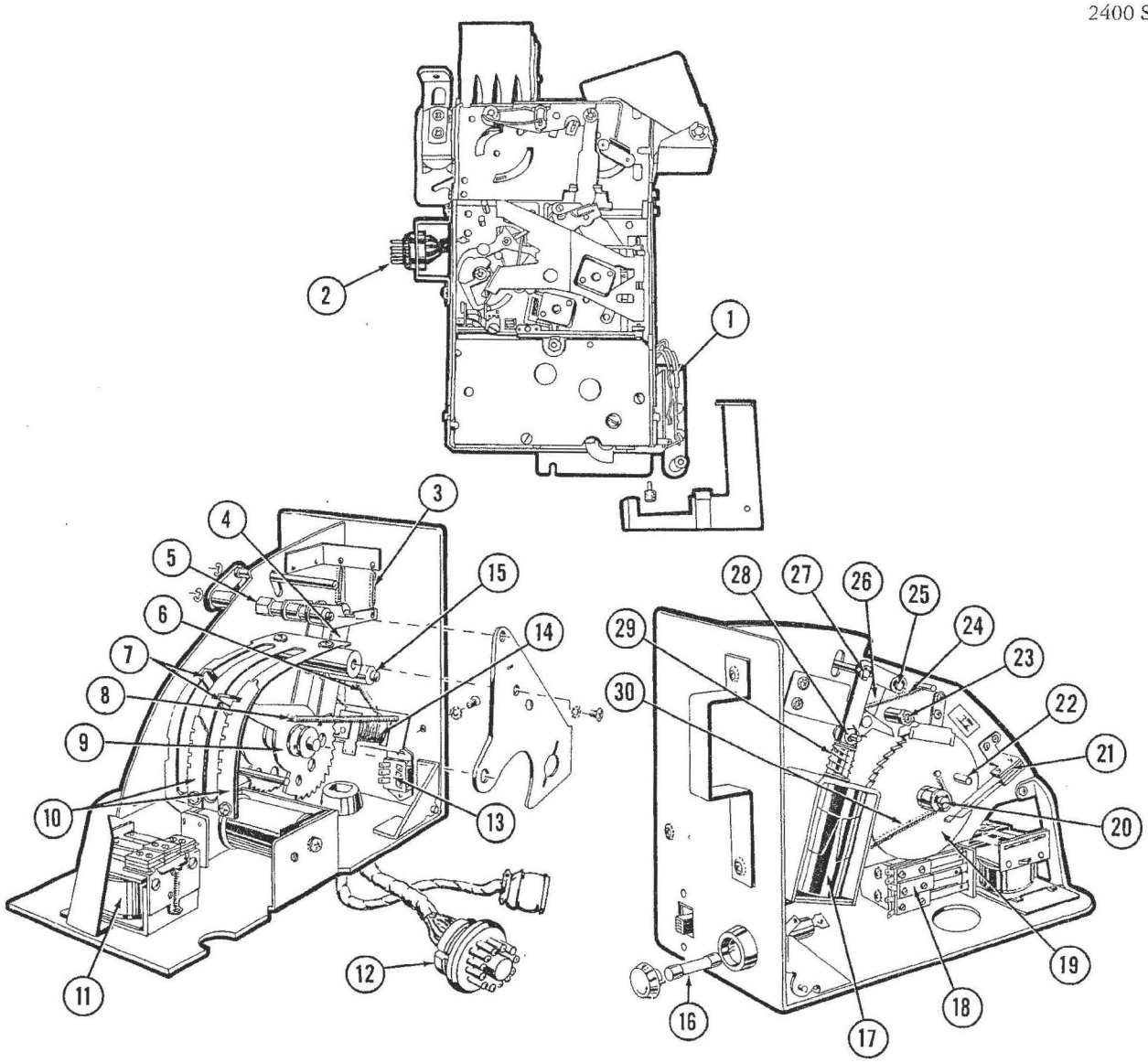

Fig. 116. PLAYRAK AND SLUG REJECTOR

1. Coin Switch Assembly, Slug Rejector	68311	15. Retaining Ring	73724-18
2. Plug, 5 Prong	13087	16. Fuse Post	51485
3. Spring, Lockout Lever	62145	Fusetron, 0.8 Amp. Slo Blow	71591-10
4. Lever, Hub and Stud Assembly,		17. Solenoid, Cancel	65069
Magnet Armature	66129	18. Relay, Timing, #1	112494
5. Mounting Stud, Lockout Levers	66049	19. Cancel Wheel, Assembly	66124
6. Spring, Armature Return (2)	58781	20. Retaining Ring	73724-25
7. Stop Lever and Spring Assembly	66132	21. Switch Assembly, Key Switch	66082
8. Spring, Accumulator Wheel (2)	66074	22. Actuator, Key Switch	58255
9. Accumulator Wheel and Hub Assembly (2)	66131	23. Adjusting Cam	42868
10. Indexing Strip and Silk Screen		24. Spring, Cancel Pawl	62145
Assembly, Quarter	66133	25. Pivot Pin, Pawl	63623
Indexing Strip and Silk Screen Assembly,		Retaining Ring	73724-21
Dime and Half Dollar	66135	26. Pivot Arm and Pawl Assembly	66125
11. Relay, Pulse	69244	27. Retaining Ring,	
12. Plug, 12 Prong	114324	Pivot Arm and Pawl Assembly	73724-15
Socket, 5 Prong	16617	28. Pin, Cancel Plunger	65947
13. Slide Switch	62886	29. Spring, Solenoid Plunger	66072
14. Coin Magnet and Bracket Assembly	66128	30. Spring, Cancel	66071

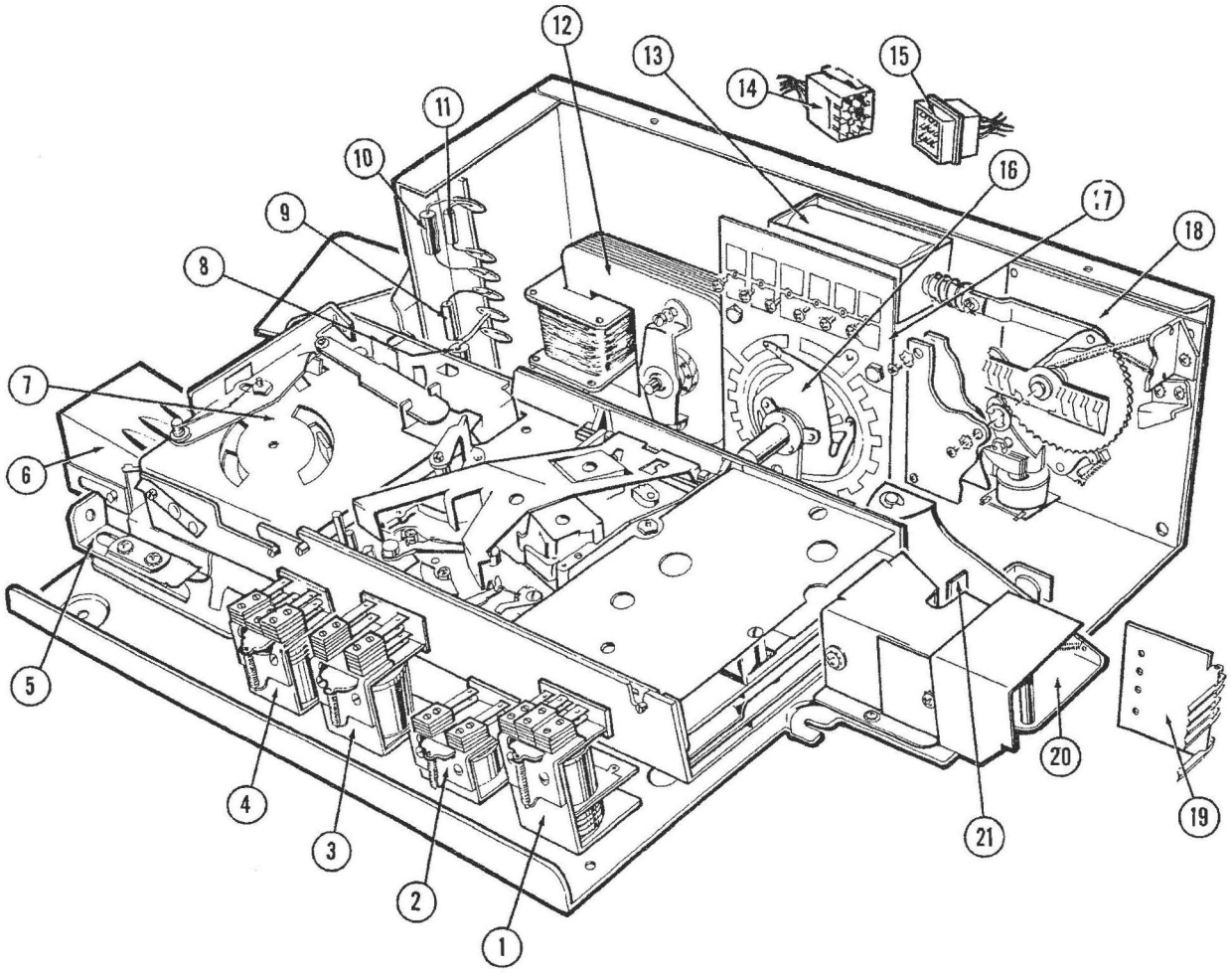

Fig. 117. COIN REGISTER MECHANISM, DUAL PRICING

1. Relay, Anti Cheat	114928	17. Printed Board, Punched	113909
2. Relay, Pricing	114889	18. Accumulator Assembly	114037
3. Relay, Timing #1	113957	Cancel Pawl and Lever Assembly	114032
4. Relay, Pulse	114949	Spring, Cancel Pawl	113999
5. Slide Lock	111125	Ratchet Wheel and Contact	113992
6. Lower Coin Chute Assembly	68552	Washer	113571
7. Slug Rejector	113350	Spring, Ratchet Wheel Return	114003
8. Capacitor, .047 Mfd. 200V	71224-12	Escapement Pawl Assembly	113945
9. Resistor, 100 Ohm, 1 Watt	72312-32	Coil Assembly	45663
10. Capacitor, .015 Mfd. 200V	71218-12	Stop, Cancel Pawl	114479
11. Resistor, 12 Ohm, 1 Watt	72290-32	Printed Board and Spacer Assembly	113960
12. Motor and Pin Assembly	113984	Spring, Cancel Lever Return	58781
13. Solenoid	60717	Spring, Escapement Pawl	114430
14. Socket, 6 Circuit	113528	19. Coin Switch	114029
Socket, 9 Circuit	113530	20. Coin Stop Arm and Switch Assembly	114038
15. Cap, 6 Circuit	113527	Spring	59894
Cap, 9 Circuit	113529	21. Coin Stop Arm, Upper	113427
16. Drive Arm and Contact Assembly,	113980	Spring	114000

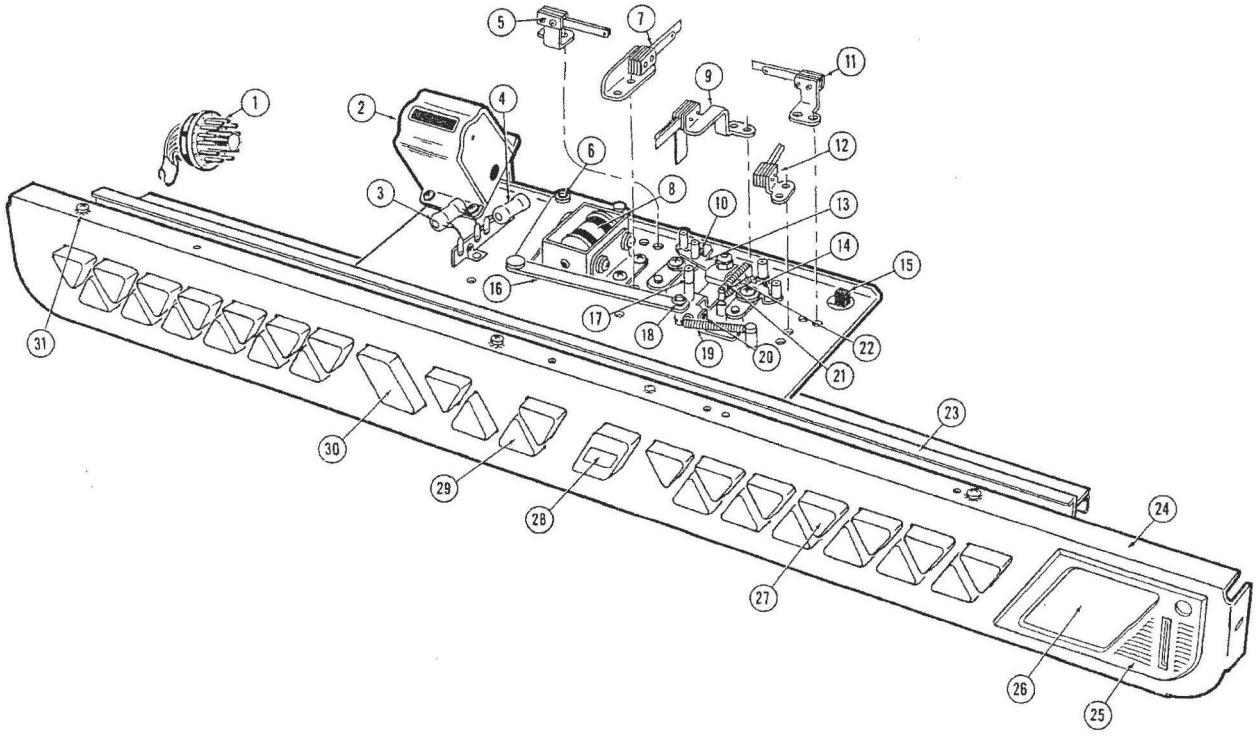

Fig. 118. SELECTOR SWITCH ASSEMBLY, 2404-2404S

1. Plug, 12 Prong	114324
2. Electric Counter	45345
3. Resistor, 150 Ohm 5 Watt	71883-2
4. Resistor, 85 Ohm 5 Watt	71886-3
5. Switch Assembly, Letter Latch	68601
6. Retaining Ring	73724-18
7. Switch Assembly, Letter Series	64981
8. Solenoid, Latch	112104
Plunger	112104-1
Pin	65947
9. Switch Assembly, Control	65007
10. Pawl, Stud and Spacer Assembly, Letters	65009
Shaft Link and Lever Assembly, Numbers	111898
Taper Pin	65362
11. Switch Assembly, Number Latch	68601
12. Switch Assembly, Number Series	64982
13. Trip Lever, Stud and Spacer Assembly	56714
14. Trip Lever and Spacer Assembly	65010
15. Switch, Slide, Return Spring	116723
16. Crank and Link Assembly	111720
17. Release Lever, Stud and Spacer Assembly	56713
18. Retaining Ring	73724-15
19. Spring, Solenoid Return	57130
20. Bracket	56628
Bumper	54246
21. Spring, Letter Trip	57128
22. Spring, Number Latch	57129
23. Mounting Channel	116264
24. Plate Program Selector	116262
25. Casting, R.H.	116157
26. Window Blank, Coin Denomination, Clear	116258
Window Blank	116257
Coin Denomination Plate Assembly (7-50 3-25 1-10)	116623
Coin Denomination Plate Assembly 10 Plays-Half Dollar, 5 Plays-Quarter, 1 Play-Dime	116768-S
27. Selector Buttons, Number, 1-26 inclusive	116110 - 116135
Connector Link, Numbers	116249
Selector Switch Assembly, Numbers	116179
Adjusting Clip	116369
28. Select Button	116317
Select Blank and Silk Screen Assembly	116314
Shield, Select Blank	116315
Panel Lamp #44	24689
Socket, #44 Lamp	66241
Mounting Bracket and Insulator Assembly	116639
29. Letter Buttons, A & B	116078 - 116079
Buttons, C & D	116108 - 116109
Connector Link, Letters	116251
Selector Switch Assembly, Letters	116169
Adjusting Clip	112417
Complete Set, Selector Buttons	116078-B
30. Reset Button	116318
Reset Switch	113249
Reset Button, Bracket	116253
31. Mounting Bracket, Selector Button	116250

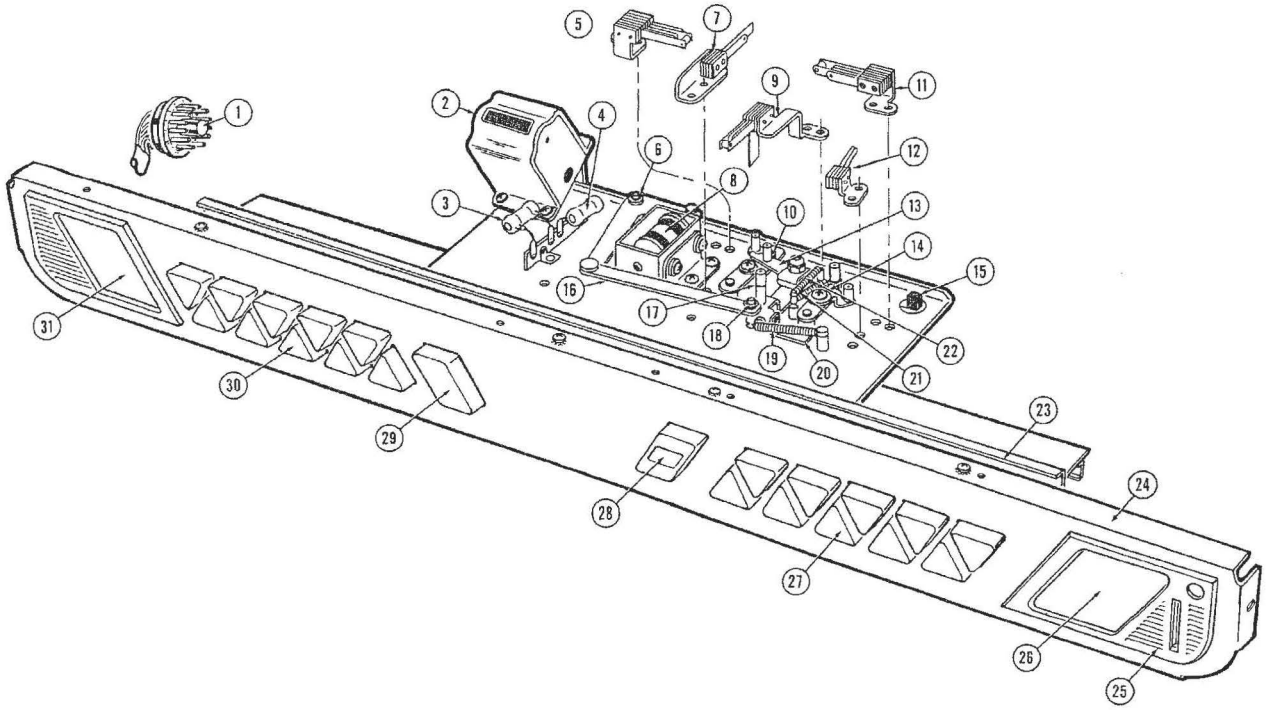

Fig. 119. SELECTOR SWITCH ASSEMBLY, 2410-2410S

1. Plug, 12 Prong	114324
2. Electric Counter	45345
3. Resistor, 150 Ohm, 5 Watt	71883-2
4. Resistor, 85 Ohm, 5 Watt	71886-3
5. Switch Assembly, Letter Latch, 2410 - 2410S	60518
6. Retaining Ring	73724-18
7. Switch Assembly, Letter Series	64981
8. Solenoid, Latch	112104
Plunger	112104-1
Pin	65947
9. Switch Assembly, Control	56704
Switch Assembly, Control 2410S	114336
10. Pawl, Stud and Spacer Assembly, Letters	65009
Shaft Link and Lever Assembly, Letters	111897
Taper Pin	65362
11. Switch Assembly, Number Latch, 2410 - 2410S	60518
12. Switch Assembly, Number Series	64982
13. Trip Lever Stud and Spacer Assembly	56714
14. Trip Lever and Spacer Assembly, Numbers	65010
15. Switch, Slide, Spring Return	116723
16. Crank and Link Assembly	111720
17. Release Lever Stud and Spacer Assembly	56713
18. Retaining Ring	73724-15
19. Spring Solenoid Return	57130
20. Stop Bracket	56628
Bumper	54246
21. Spring, Letter Trip	57128
22. Spring, Number Pawl	57129
23. Mounting Channel	116266
24. Plate, Program Selector	116261
25. Casting, R.H.	116157
Lamp, #12, 2410S	111816
Socket, #12 Lamp, 2410S	111817
Cover and Bracket Assembly, Light Box, 2410S	116309
Separator, Light Box, 2410S	116312
Light Diffuser, 2410S	116954
26. Window Blank, Coin Denomination, Clear	116258
Coin Denomination Plate Assembly, 2410S	116622
27. Selector Button 1 - 5	116136 - 116140
Selector Buttons 6-0	116103 - 116107
Selector Switch Assembly, Numbers	114092
28. Select Button	116317
Select Blank and Silk Screen Assembly	116314
Shield, Select Blank	116315
Lamp #44	24689
Socket, #44 Lamp	66241
29. Reset Button	116318
Switch, Reset	113249
Bracket, Reset Button	116253
30. Selector Buttons A & B	116078 - 116079
Selector Buttons C - K	116080 - 116087
Connector Link, Letters	116259
Adjusting Clip, Letter	112417
Selector Switch Assembly, Letters	116178
Selector Switch Assembly, Letters 2410S	114093
31. Casting, L.H.	116158
Instruction Plate Assembly, L.H., Insert Half Dollars, Quarters, Dimes, Nickels	116624

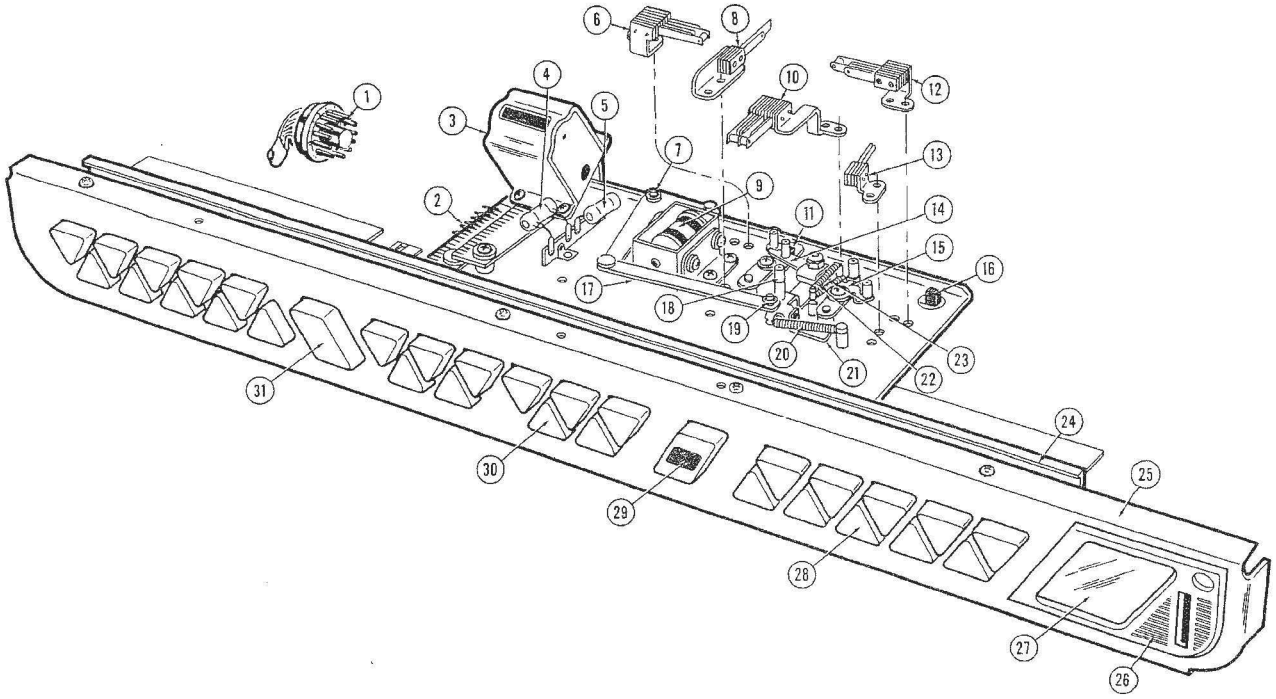

Fig. 120. SELECTOR SWITCH ASSEMBLY, 2400-2400S

1. Plug, 12 Prong	114324
2. Pricing Plate, 2400S	113997
Edge Connector 2400S	114033
3. Electric Counter	45345
4. Resistor, 150 Ohm, 5 Watt	71883-2
5. Resistor, 85 Ohm, 5 Watt	71886-3
6. Switch Assembly, Letter Latch	60518
7. Retaining Ring	73724-18
8. Switch Assembly, Letter Series	64981
9. Solenoid, Latch	112104
Plunger	112104-1
Pin	65947
10. Switch Assembly, Control, 2400	56704
Switch Assembly, Control, 2400S	114336
11. Pawl, Stud and Spacer Assembly, Letters	65009
Taper Pin	65362
12. Switch Assembly, Number Latch	60518
13. Switch Assembly, Number Series	64982
14. Trip Lever, Stud and Spacer Assembly	56714
15. Trip Lever, and Spacer Assembly, Numbers	117695 or 65010
Shaft, Link and Lever Assembly, Numbers	111898
16. Switch, Slide, Spring Return	116723
17. Crank and Link Assembly	111720
18. Release Lever Stud and Spacer Assembly	56713
19. Retaining Ring	73724-15
20. Spring, Solenoid Return	57130
21. Stop Bracket	56628
Bumper	54246
22. Spring, Letter Trip	57128
23. Spring, Number Pawl	57129
24. Mounting Channel	116265
25. Plate, Program Selector	116263
26. Casting, R.H.	116157
Lamp #12 2400S	111816
Socket #12 Lamp	111817
Cover and Bracket Assembly, Light Box, 2400S	116309
Separator, Light Box, 2400S	116312
Light Diffuser, 2400S	116954
27. Window Blank, Coin Denomination, Clear	116258
Window Blank	116257
Coin Denomination Plate	
7 Plays Half Dollar, 3 Plays Quarter, 1 Play Dime, 2400	116623
5 Plays Quarter, 2 Plays Dime, 1 Play Nickel, 2400	116625
10 Plays Half Dollar, 4 Plays Quarter, 1 Play Dime	116770-S
9 Plays Half Dollar, 4 Plays Quarter, 1 Play Dime	116769-S
10 Plays Half Dollar, 5 Plays Quarter, 1 Play Dime	116768-S
28. Selector Buttons "A"-"B"	116078 - 116079
Selector Buttons "C"-"V"	116080 - 116097
Selector Buttons, Complete Set,	116078-A
Selector Switch, Letter 2400	116167
2400S	116178
Connector Link, Letters	116260
Adjusting Clip, Letters	112417
29. Select Button	116317
Select Blank and Silk Screen Assembly	116314
Shield, Select Blank	116315
Lamp, #44 24689 Socket	66241
30. Selector Buttons, Numbers 1-5	116098 - 116102
Selector Buttons, Number 6-0	116103 - 116107
Connector Link, Number	116255
Adjusting Clip, Number	116369
Selector Switch Assembly, Number	116168
31. Reset Button	116318
Switch, Reset	113249
Bracket, Reset Button	116253

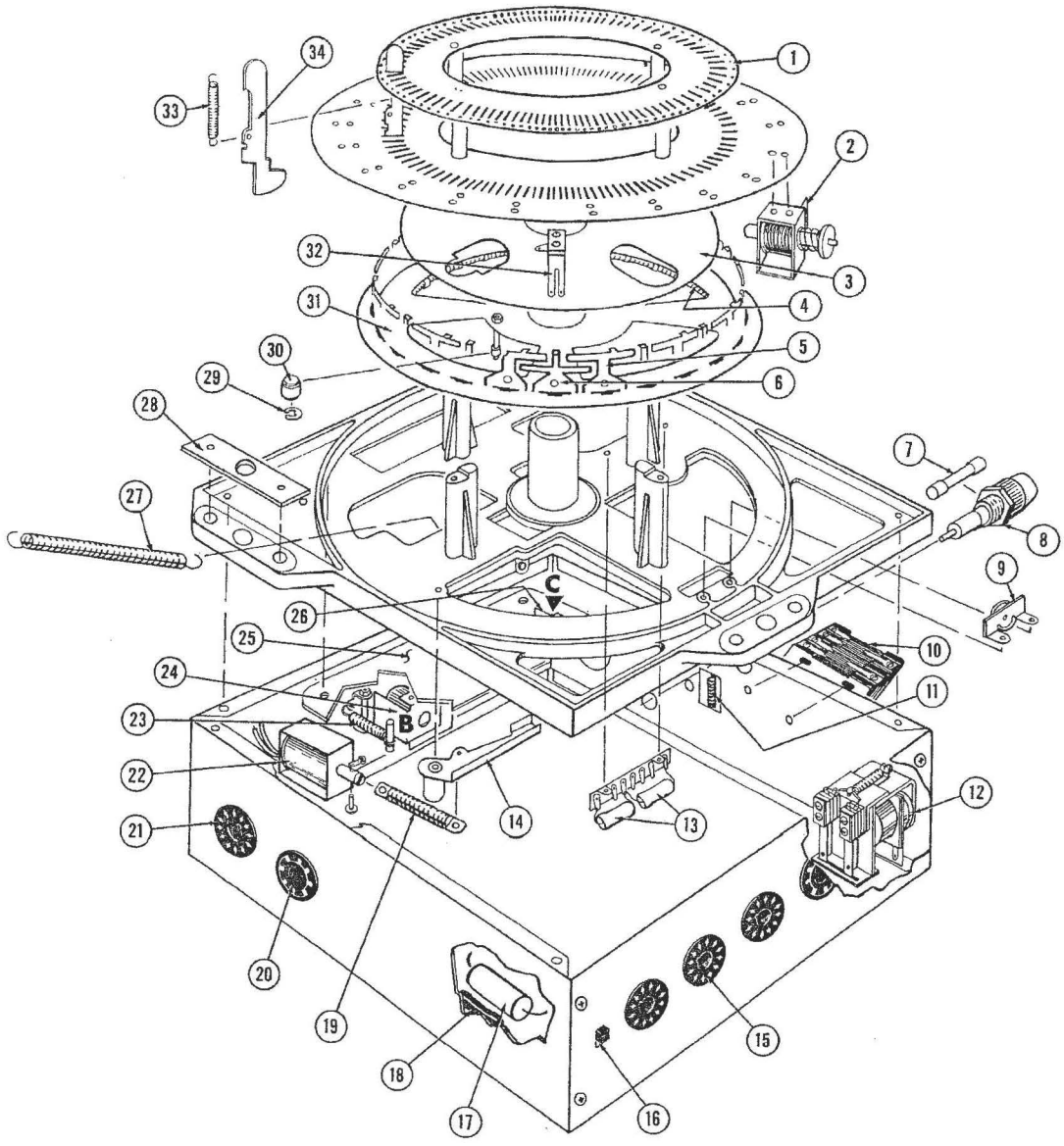

Fig. 121. ELECTRIC SELECTOR 2404-2404S

1.	Plate and Spacer Assembly	64590	17.	Capacitor, 150 Mfd., 50V	73889-620
2.	Solenoid, Selector (26)	64602	18.	Resistor, 50 Ohm, 5W	72986-2
3.	Wobble Plate and Contact Assembly	64605	19.	Spring and Plug Assembly	64783
4.	Spring, Selector Rockers	53489	20.	Socket, 6 Prong	32881
5.	Rocker, Long, Even (13)	64619	21.	Socket, 12 Prong (5)	114325
6.	Rocker, Short, Odd (13)	64618	22.	Solenoid, Driver	64722
7.	Fuse, 4/10 Amp.	45509	23.	Spring, Stop Arm (2)	64773
8.	Fuse Post	45352	24.	Magnet and Frame Assembly L.H.	64651
9.	Roller and Bracket Assembly (3)	64630	25.	Mounting Plate and Magnet Assembly	64645
10.	Micro Switch, Reversing (2)	61596	26.	Magnet and Frame Assembly R.H.	64650
11.	Spring, Reversing Switch	61173	27.	Spring, Return	64781
12.	Relay, Timing, No. 2	64711	28.	Guide Plate, (3)	61850
13.	Resistor, 120 Ohm, 5W (2)	71885-2	29.	Retaining Ring	73124-18
14.	Pin, Hub and Arm Assembly	64637	30.	Roller and Bracket Assembly	64613
	Retaining Ring	73724-18	31.	Rotating Plate	64609
	Retaining Ring	73724-15	32.	Contact Assembly (3)	64601
15.	Socket, 11 Prong (5)	38492	33.	Spring, Latch Pin	57110
16.	Switch	116724	34.	Latch Pin (104)	64606

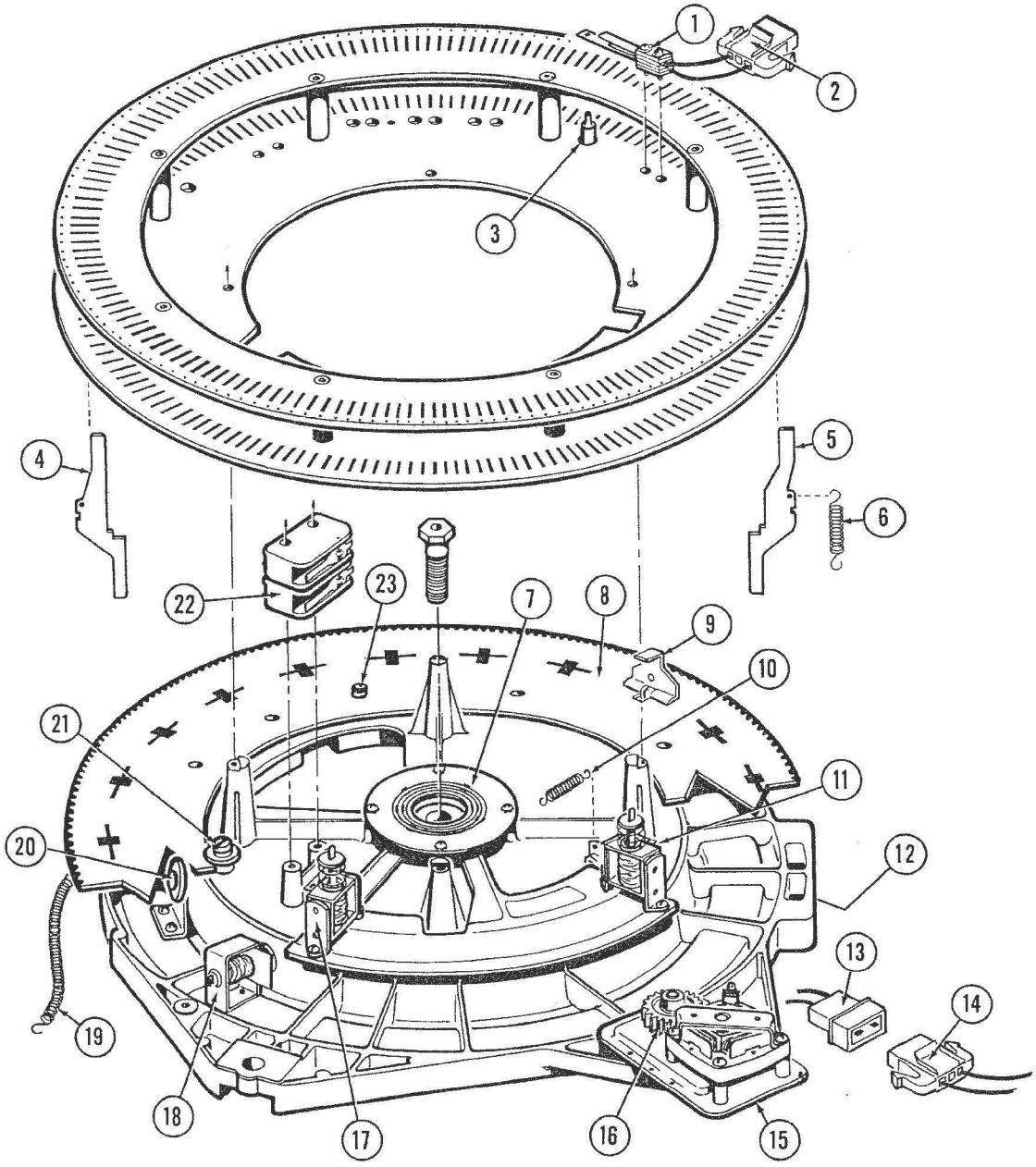

Fig. 122. ELECTRIC SELECTOR 2400-2400S 115848

1. Switch Assembly, Over-ride	65952	14. Socket, 3 Circuit	111528
2. Socket, 3 Circuit	111528	15. Motor and Gear Assembly	111913
3. Wobble Ring 67927	Spacer 68650	16. Gear and Hub Assembly	68717
4. Latch Pin, Inner (100)	110941	Roll Pin	73782-32
5. Latch Pin, Outer (100)	110942	17. Solenoid, Selector, Number (9)	68617
6. Spring, Latch Pin (200)	110480	18. Solenoid, Selector, Letter (20)	68594
7. Contact Plate	66186	19. Spring, Rotating Plate Assembly	68755
8. Rotating Plate	67920	20. Bracket and Roller Assembly (3)	68651
9. Rocker, Rotating Plate (20)	67926	21. Roller, Guide (3)	68656
10. Spring, Number Quadrant	62773	Stud, Eccentric Guide Roller	69659
11. Solenoid Selector, Number (1)	68804	Stud, Guide Roller (2)	68657
12. Socket, 11 Prong (3)	38492	Retaining Ring, Guide Roller (3)	73724-31
Plug, 11 Prong (1)	48501	22. Micro Switch,	
13. Cap, 3 Circuit	111526	Start and Reverse (2)	61596
Contact (5)	111527	23. Stop Pin (10)	115411

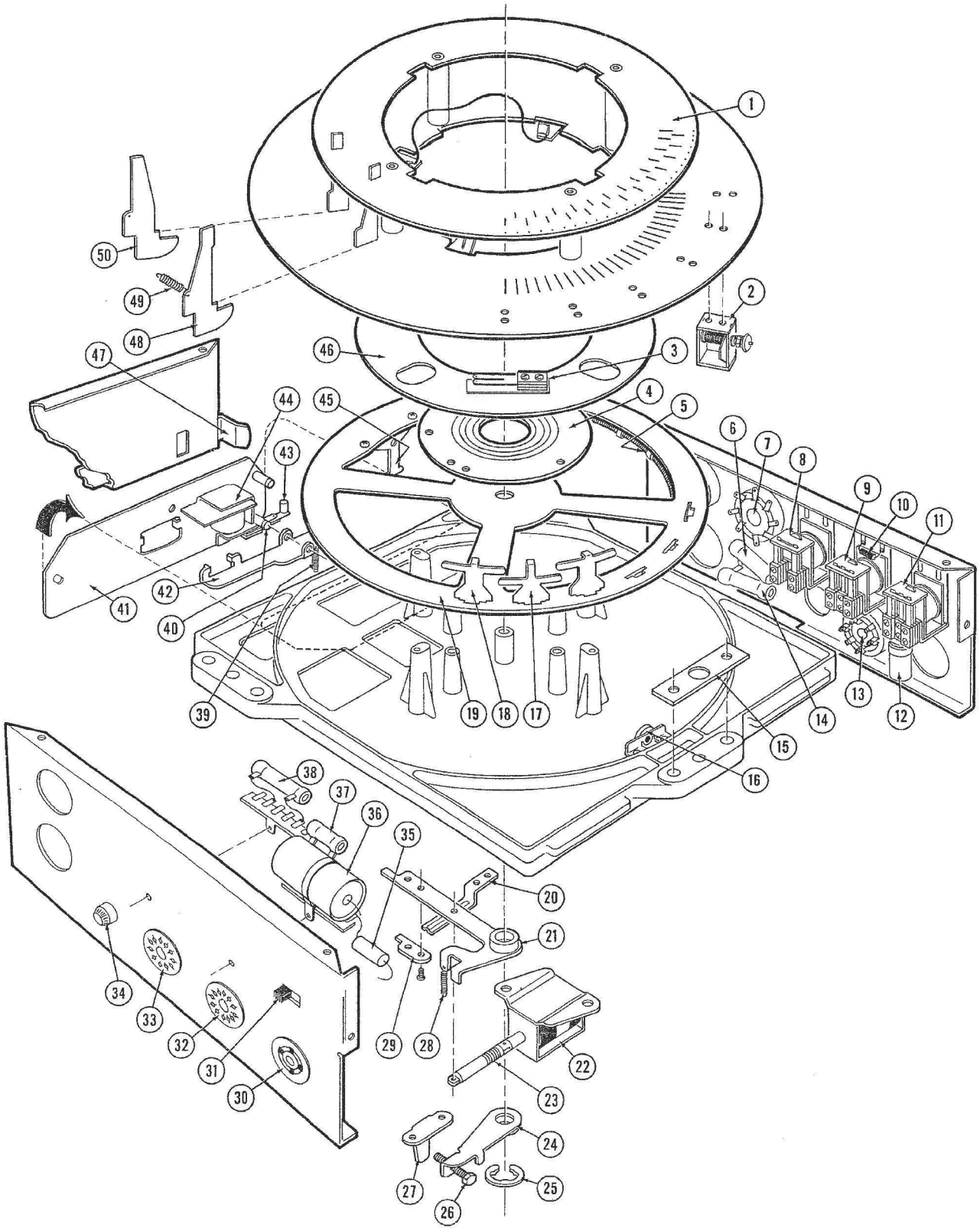

Fig. 123. ELECTRIC SELECTOR, 2410 - 2410S

Fig. 123. ELECTRIC SELECTOR, 2410-2410S

1. Plate and Spacer Assembly	115909	26. Screw 8-32 x 7/8" Hex.	73793-87
2. Solenoid, Selector (20)	64602	27. Stop, Centering Yoke	115824
3. Contact Assembly (4)	115918	28. Spring, Centering Yoke	115821
4. Contact Plate Assembly	66186	29. Guide Plate, Centering Yoke	115822
5. Spring	115973	30. Socket, 4 Prong	30495
6. Resistor, 8 Ohm, 10 Watt	73476-2	31. Slide Switch	116724
7. Socket, 8 Prong	10964	32. Socket, 12 Prong (2)	114325
8. Relay, Indexing	115900	33. Socket, 11 Prong	38492
9. Relay, Reverse	69240	34. Fuse Post	51485
10. Resistor, 2200 Ohm, 1/2W	72200-32	Fuse 8/10 Amp.	71591-10
11. Relay, Timing #2	117007	35. Capacitor, .022 Mfd., 400V	71220-24
12. Capacitor .1, 400V	73093-142	36. Capacitor, 250 Mfd., 50V	71499
13. Socket, 6 Prong	32881	37. Resistor, 50 Ohm, 5W	72986-2
14. Resistor, 310 Ohm	72999-2	38. Resistor, 125 Ohm, 10W	72935-2
15. Guide, Selector Mounting Stud	61850	39. Spring, Stop Arm	64773
16. Roller Assembly	64630	40. Stop Pivot	64649
17. Rocker, Short (10)	64618	41. Mounting Plate and Magnet Assembly	115879
18. Rocker, Long (10)	115788	42. Stop Arm and Rivet Assembly	115862
19. Rotating Plate	115787	43. Contact Assembly	115914
20. Guide, Centering Yoke	115823	44. Magnet and Frame Assembly	64651
21. Yoke and Hub Assembly	115804	45. Stop Bracket, Selector	115789
22. Solenoid (2)	115975	46. Wobble Plate	115796
23. Spring	64784	47. Latch Bar, Stepper	115837
24. Adjusting Bracket, Hub and Stop		48. Latch Pin, Inner (50)	115806
Nut Assembly	115798	49. Spring, Selector Latch Pins (100)	57110
25. Retaining Ring	73724-50	50. Latch Pin, Outer	115807

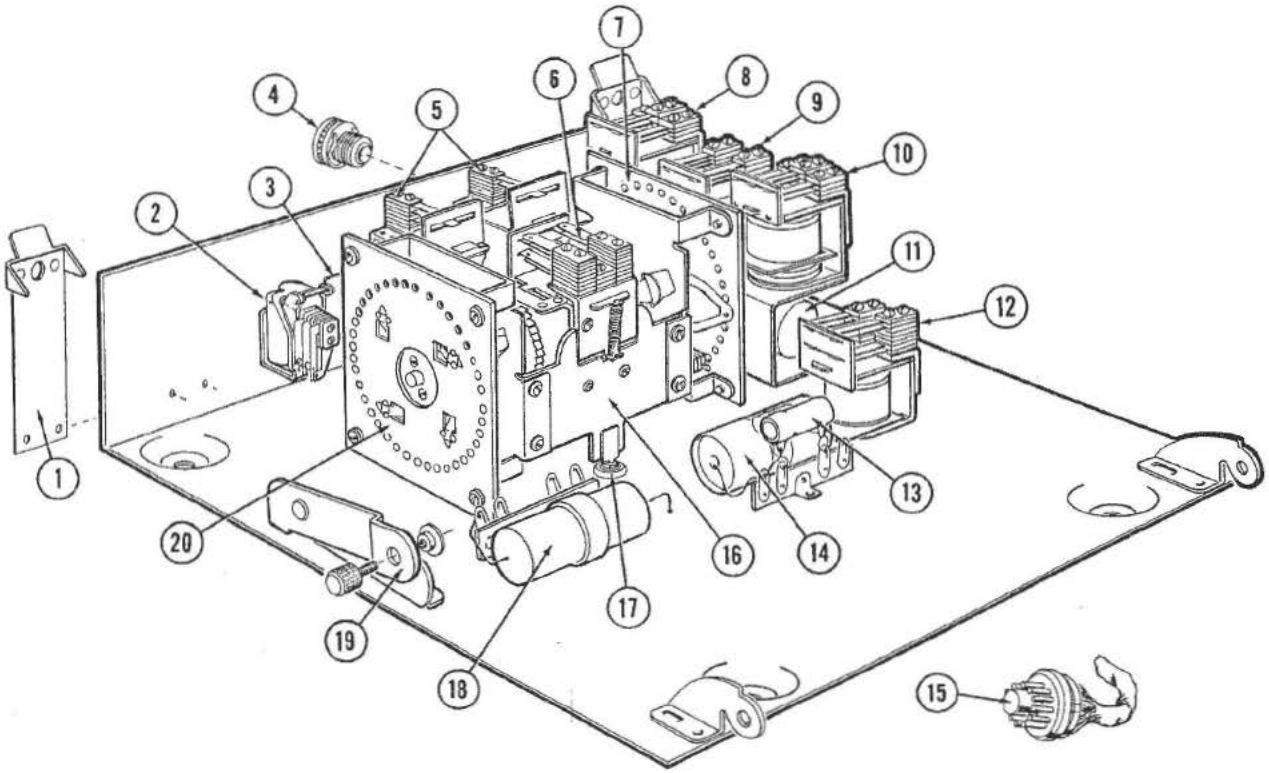

Fig. 124. MODEL 259 STEPPER

1. Spring and Clip Assembly (2)	115832
2. Relay, Pulse	117048
3. Terminal Strip	62496
4. Fustat, 3 Amp.	61858
Socket, Fustat	61857
5. Step Magnet (2)	114346-B
6. Relay, Release Latch	114346-A
7. Contact Plate Assembly, 2 Circuit, Numbers	114528-E
Contact Arm Assembly, 2 Circuit, Numbers	114528-G
Nylon Ratchet Wheel, Numbers	114346-C
8. Relay, Letter Pulse	68940
9. Relay, Transfer	115884
10. Relay, Timing, Letters	117061
11. Capacitor, 250 Mfd., 50V	71499
Capacitor, .01 Mfd., 400V	71217-14
12. Relay, Timing, Numbers	115889
13. Resistor, 50 Ohm, 5W	72986-2
Resistor, 560 Ohm, 2W	72474-32
Resistor, 150 Ohm, 5W	71883-2
14. Capacitor, 100 Mfd., 50V (2)	73862
15. Plug, 11 Prong	54878
16. Dual Stepper Switch Assembly	116050
17. Grommet, (3)	60574
Cup Washer (3)	60575
18. Capacitor, .5 Mfd., 400V	73099-240
19. Fall Support Assembly	115825
Thumb Screw	59280
Spacer	115831
20. Contact Plate Assembly, 4 Circuit, Letters	114528-F
Contact Arm, 4 Circuit, Letters	114528-H
Nylon Ratchet Wheel, Letters	114346-D

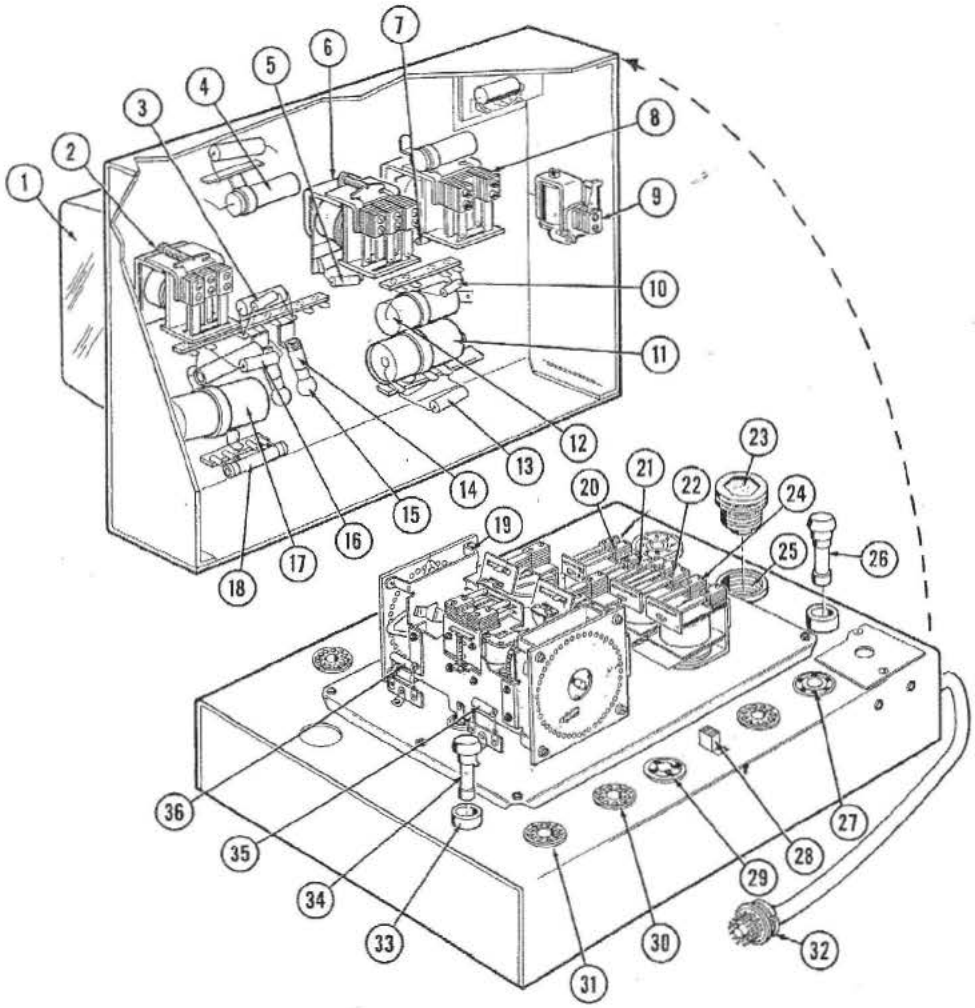

Fig. 125. JUNCTION BOX AND STEPPER UNIT, 2400 - 2400S

1. Cover, Plastic	65801
2. Relay, Timing, #3	68943
3. Resistor, 27 Ohms, 1W	72298-32
4. Capacitor, .1 Mfd., 400 V.	73093-24
5. Resistor, 120 Ohms, 1 W	72314-32
6. Relay, Timing, #2	68942
7. Resistor, 2200 Ohms, 1W	72200-32
8. Relay, Reverse	69240
9. Pulse Relay	111494
10. Resistor, 27 Ohms, 1W	72298-32
11. Capacitor, 250 Mfd.	71499
12. Capacitor, .5 Mfd.	73099-240
13. Resistor, 220 Ohms, 2W	72464-32
14. Lamp, Socket Assembly	110453
15. Lamp, Mazda 55 (2)	67439
16. Resistor, 50 Ohms, 2W	72449-31
17. Capacitor, 75 Mfd., 50V, A.C.	70901
18. Resistor, 125 Ohms, 10W	72935-2
19. Stepper, Dual	114346
Step Magnet	114346-B
Release Relay	114346-A
Nylon Ratchet Wheel - Number	114346-C
Nylon Ratchet Wheel - Letter	114346-D
Contact Plate - Number	114346-E
Contact Plate - Letter	114346-F
Contact Wiper - Number	114346-G
Contact Wiper - Letter	114346-H
20. Relay, Timing, Letters	68941
21. Relay, Transfer	114501
22. Relay, Timing, Numbers	68940
23. Fustat, 3 Amp.	61858
24. Relay, Number Pulse	114505
25. Socket, Fustat	61857
26. Fusetron, 0.3 Amp.	71591-3
27. Socket, 6 Prong	32881
28. Switch, Slide Type	116724
29. Socket, 4 Prong	30495
30. Socket, 11 Prong (2)	38492
31. Socket, 12 Prong (5)	114325
32. Plug, 11 Prong	54878
33. Fuse Post (2)	45352
34. Fusetron, 0.8 Amp.	71591-10
35. Resistor, 820 Ohms, 2W	72478-32
36. Resistor, 560 Ohms, 2W	72474-32

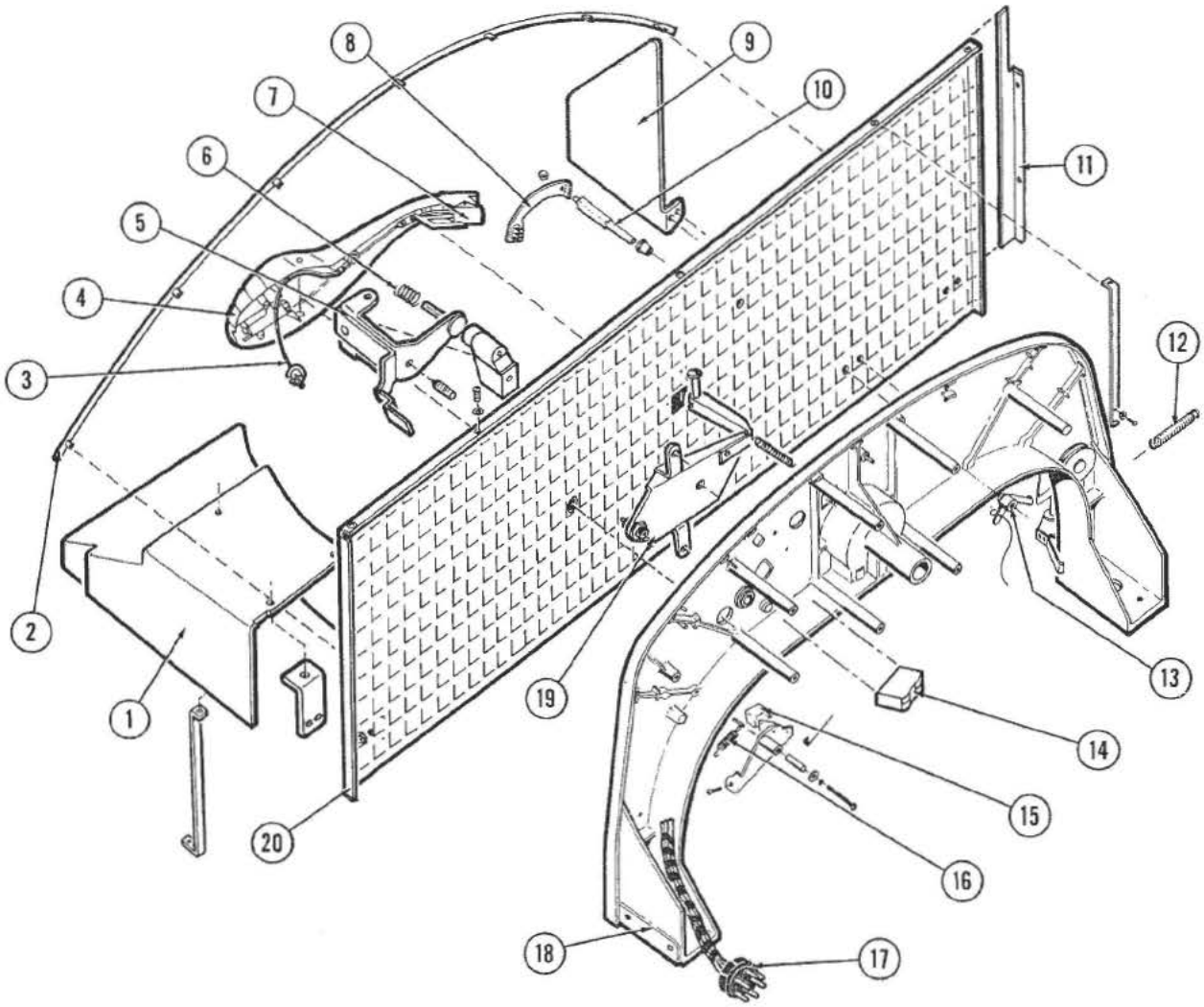

Fig. 126. TOP SUPPORT CASTING ASSEMBLY

1. Decorative Shelf and Decal Assembly
   (Model 2404) R.H. 116564 L.H. 116565
   Decorative Shelf and Decal Assembly
   (Model 2410) R.H. 116560 L.H. 116561
   Screw, 8-32 x 1/4" Truss Hd. 73787-85
2. Extrusion, Decorative Background 116300
3. Wire and Plug Assembly (Stereo) 114323
   Plug, 4 Prong (Stereo) 69089
   Wire Assembly, Monophonic 59792
4. Tone Arm and Wire Assembly (Stereo) 113320
   Latch, Tone Arm 64423
5. Gimbal and Stop Nut Assembly 113454
   Pivot Screw 59394 Nut, Nylock 73865-8
6. Spring, Tone Arm Pressure 114484
7. Connector Cartridge, Stereo 113325
   Cartridge, Sonotone, Stereo 116725
   "Cobra" Cartridge, Green 59042
   Washer, Rubber 59351
8. Arm and Brush Assembly 116075
   Acorn Nut 50324 Brush 59830
9. Shield (Model 2400) L.H. 116522 R.H. 116523
10. Shaft, Tone Arm Brush 116069
11. Shield (Model 2404) L.H. 116509 R.H. 116575
    Shield (Model 2410) L.H. 116508 R.H. 116577
12. Spring, Record Indicator Bracket 59710
13. Shaft and Hub Assembly, Tone Arm Brush 116070
    Cable, Tone Arm Brush 59888
    Cable, Clip #7 73804-7
    Spring, Tone Arm Brush 59607
14. Micro Switch, Safety 60655
15. Trip Switch 57851
16. Spring, Trip Switch 59615
17. Plug, 6 Prong, Chassis 16607
18. Support Casting and Bushing Assembly 113199
19. Tone Arm Stop Pin Assembly 115660
    Adjusting Screw, Tone Arm Release 64427
    Spring, Tone Arm Stop Pin Assembly 65096
20. Decorative Background - Blue 116407
    Gold Over-lay 116426
    Plastic Compound 110048

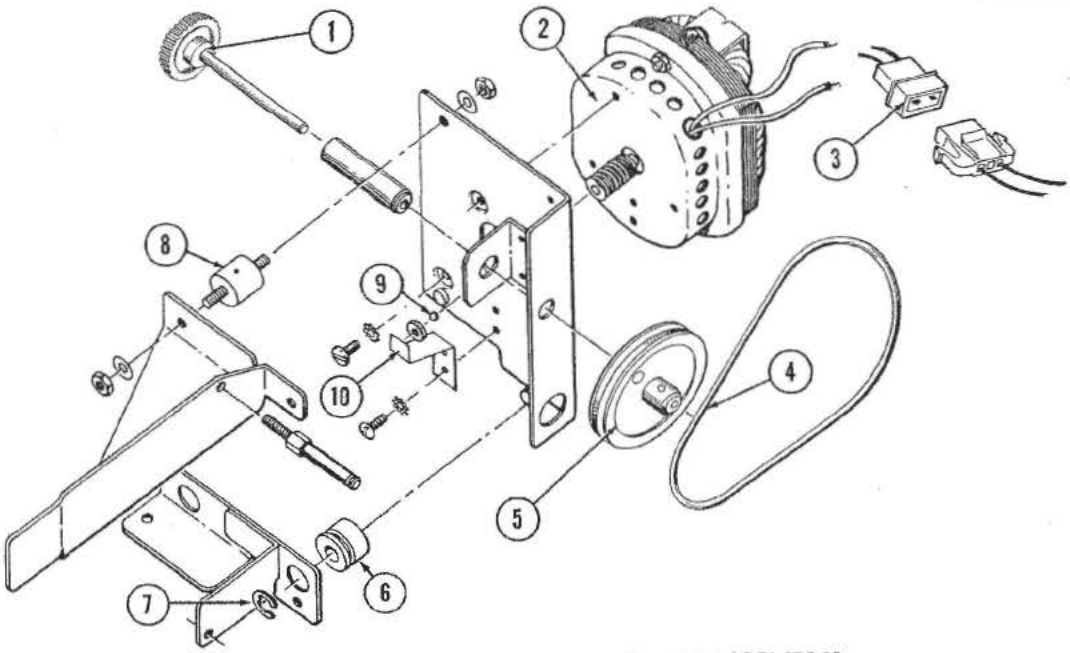

Fig. 127. TURNTABLE MOTOR AND GEAR SHAFT ASSEMBLY

1. Gear and Shaft Assembly	65203
2. Turntable Motor and Worm Assembly	116905
Worm, Turntable Motor	115206
Roll Pin	73782-11
3. Socket, 6 Circuit, Turntable Motor	113528
Cap 113527 Contacts	113789
4. "O" Ring, Turntable Drive Motor	60881
5. Pulley, Turntable Drive Motor	115023
Set Screw, 6-32 x 3/16	73513-19
6. Grommet, Turntable Motor	49884
7. Retaining Ring, Turntable Motor	73724-25
8. Rubber Mount (2 used)	60882
9. Steel Ball	25202
10. Spring Clip	60893

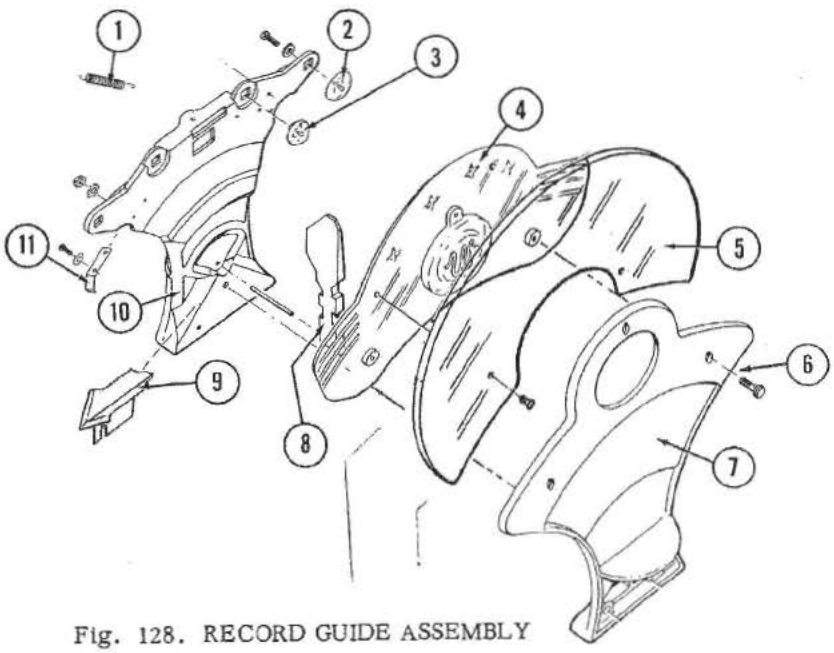

Fig. 128. RECORD GUIDE ASSEMBLY

1. Spring Return	59606
2. Bumper Record Guide, Outer	117254
3. Bumper Record Guide, Inner	59396
4. Plate, Record Guide, Stereo	114508
5. Overlay, Record Guide Plate, Stereo	114507
Screw, 8-32 x 5/16" (2 used)	73787-86
6. Screw, 6-32 x 7/16 Truss Hd.	73787-69
7. Casting, Front, Record Guide	114087
8. Track, Record Guide	59425
9. Record Guide and Bracket Assembly	
L.H. 68375 R.H.	68376
10. Casting, Rear, Record Guide	59467
11. Stop Bracket, Track (2 used)	59434
Screw, 4-40 x 5/16 R.H. (4 used)	73533-3

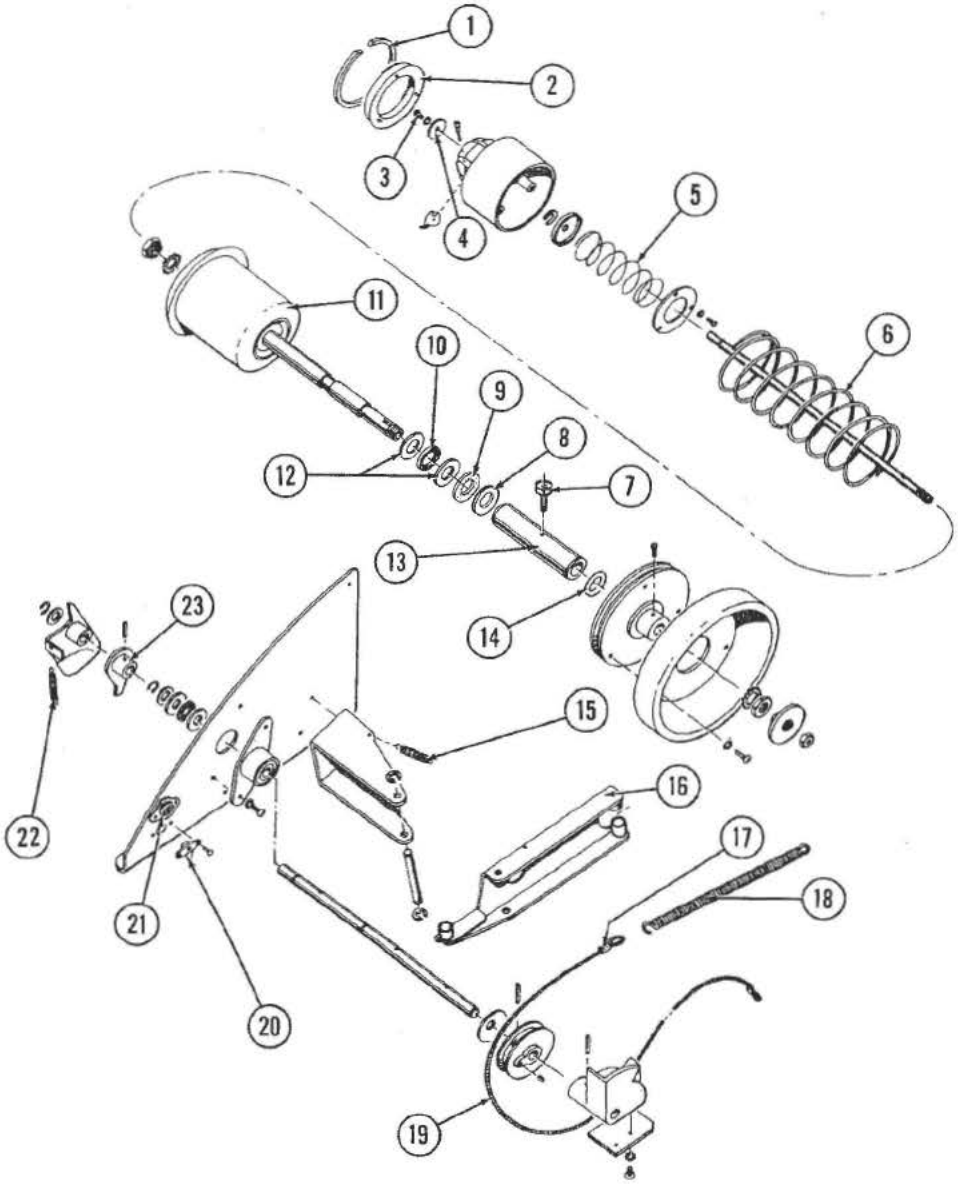

Fig. 129. TURNTABLE SHAFT ASSEMBLY, RECORD CLAMP SHAFT, AND MOUNTING PLATE AND BALL BEARING ASSEMBLY

1. Retaining Ring	60681	13. Sleeve and Bushing Assembly	64520
2. Pad, Turntable	60680	14. Washer	56530
3. Screw, 4-40 x 1/4 Rd. Hd.	73503-23	15. Spring, Turntable Release Lever	65096
4. Washer, Record Clamp	59423	16. Arm and Roller Assembly	59922
5. Spring, Record Clamp	59418	17. Sleeve, Cable, Turntable Actuating (2)	61658
6. Spring, Pilot, Record Clamp	59424	18. Spring, Idler Pulley	61174
7. Screw, Turntable Sleeve	64513	19. Cable, Turntable Actuating	59871
8. Shim, Metal	63731	20. Socket, Single Prong	43341
9. Shim, Fiber	63732	21. Socket, 4 Prong, (Stereo)	69090
10. Ball Race	59867	Cable Assembly, Input	110190
11. Turntable and Shaft Assembly	68102	22. Spring	59606
12. Washers (2 used)	59864	23. Arm and Hub Assembly	59406

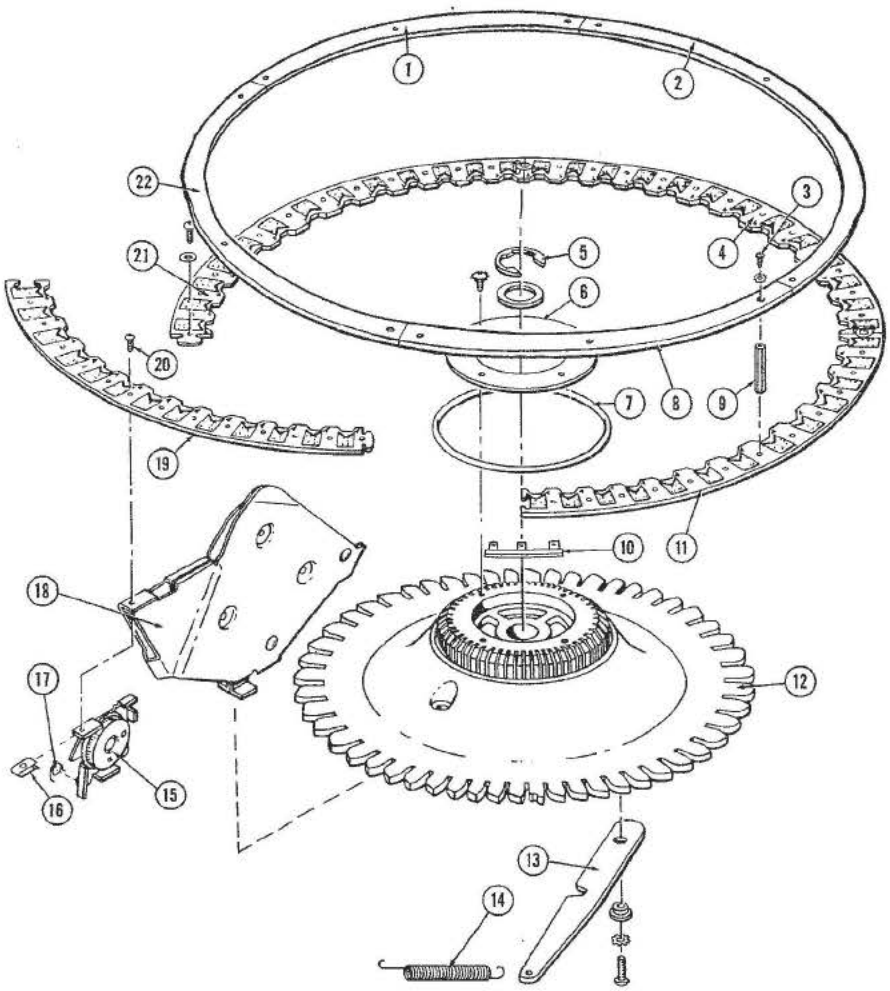

Fig. 130. RECORD CARRIER ASSEMBLY

MODEL 2404-2404S

1.	Segment, Record Indicator Ring, C4-D9	113189
2.	Segment, Record Indicator Ring, B24-C3	113190
3.	Screw 4-40 x 3/16	73533-1
4.	Carrier Ring and Silk Screen, C13-C20	114062
5.	Retaining Ring	73724-87
6.	Clamp, Record Holder	59734
7.	Ring, Rubber Gasket	59714
8.	Segment, Record Indicator Ring, A18-B23	113188
9.	Spacer Stud (12)	113202
10.	Not used on this model	
11.	Carrier Ring and Silk Screen, B7-B14	114061
12.	Casting, Record Carrier	59573
13.	Arm, Carrier Drive	59721
14.	Spring, Carrier Drive Arm	59709
15.	Record Play Counter Assembly (52)	59859
16.	Tinnerman Nut	73637-10
17.	Spring, Play Counter	59901
18.	Record Holder Assembly (52)	59601
19.	Carrier Ring and Silk Screen, A1-A8	114060
20.	Screw 4-40 x 3/8	73503-25
21.	Carrier Ring and Silk Screen, D19-D26	114063
22.	Segment, Record Indicator Ring, A17-D10	113187

MODEL 2410-2410S

1.	Segment, Record Indicator Ring, G4-J8	113718
2.	Segment, Record Indicator Ring, D7-G1	113719
3.	Screw 4-40 x 3/16 (10)	73533-1
4.	Carrier Ring and Silk Screen, F3-H5	113410
5.	Retaining Ring	73724-87
6.	Clamp, Record Holder	59734
7.	Ring, Rubber Gasket	59714
8.	Segment, Record Indicator Ring, B4-D8	113720
9.	Spacer Stud (10)	113202
10.	Connecting Bracket	113387
11.	Carrier Ring and Silk Screen, H9-K0	113411
12.	Casting, Record Carrier	115750
13.	Not used on this model	
14.	Not used on this model	
15.	Record Play Counter	59859
16.	Tinnerman Nut	73637-10
17.	Spring, Play Counter	59901
18.	Record Holder, Assembly (50)	59601
19.	Carrier Ring and Silk Screen, A1-C5	113408
20.	Screw 4-40 x 3/8 (40)	73503-25
21.	Carrier Ring and Silk Screen, C9-E0	113409
22.	Segment, Record Indicator Ring, J7-B1	113717

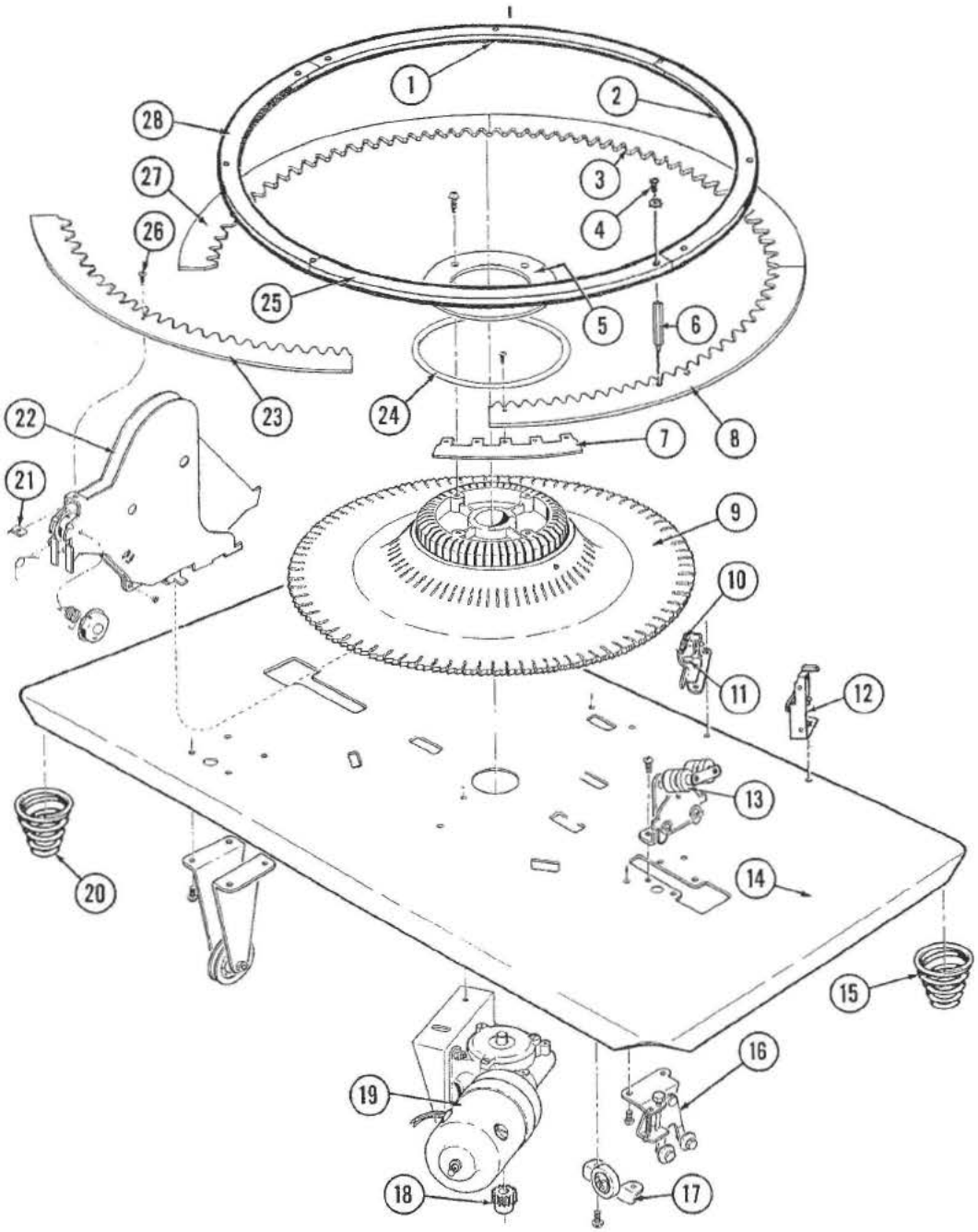

Fig. 131. CHASSIS MOUNTING PLATE AND RECORD CARRIER GROUP, 2400-2400S

1. Segment, Record Indicator Ring, H6-N5	113195
2. Segment, Record Indicator Ring, C6-H5	113196
3. Carrier Ring and Silk Screen, L2-R1	114066
4. Screw, 4-40 x 3/16"	73533-1
5. Clamp, Record Holder	59734
6. Spacer, Stud (10)	113202
7. Connecting Bracket	65548
8. Carrier Ring and Silk Screen, F2-L1	114064
9. Casting, Record Carrier	115684
10. Spring, Back Stop Pawl	59710
11. Bumper, Back Stop Pawl	54246
12. Play Meter, Reset Lever Assembly	113210
13. Roller, Lift Arm Guide	65939
14. Chassis Mounting Plate Assembly	59827
15. Conical Spring (Yellow for identification)	61059
16. Bracket and Roller Assembly	
R.H. 65886	L.H. 65885
17. Bracket and Roller Assembly	59844
18. Pinion	116997
Roll Pin	73782-48
19. Motor and Pinion	69067
20. Conical Spring (Red for identification)	53774
21. Nut, Tinnerman	73637-10
22. Record Holder Assembly	65908
23. Carrier Ring and Silk Screen, A2-F1	114067
24. Ring, Rubber Gasket	59714
25. Segment, Record Indicator Ring, T6-C5	113197
26. Screw, 4-40 x 3/8	73503-25
27. Carrier Ring and Silk Screen, R2-A1	114065
28. Segment, Record Indicator Ring, N6-T5	113194

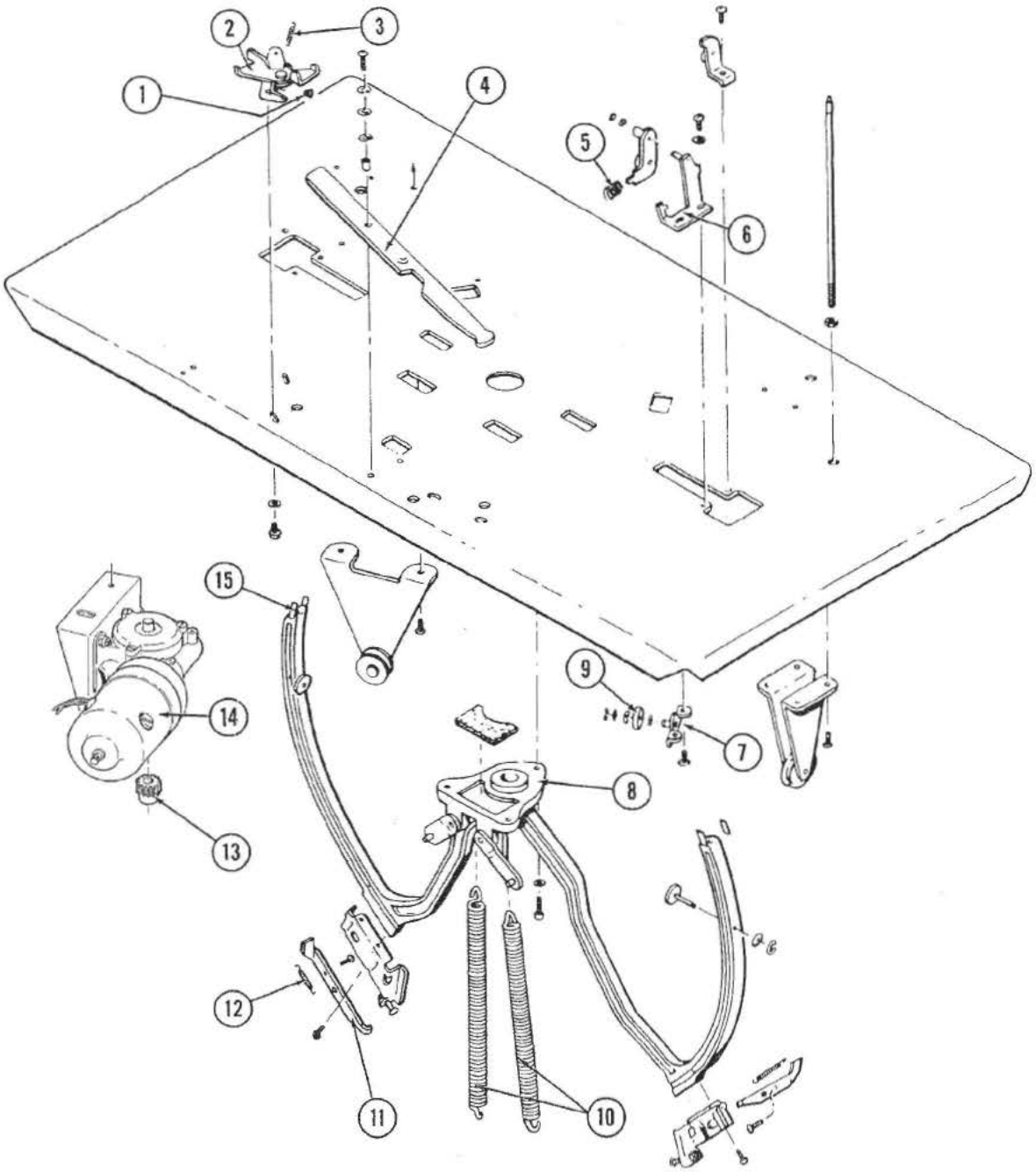

Fig. 132. CHASSIS MOUNTING PLATE, PIVOT CASTING AND ARM ASSEMBLY, 2404 - 2404S, 2410 - 2410S

1. Bumper, Rubber	54246	9. Ball Bearing	59672
2. Back Stop Pawl Assembly (2)	59575	10. Spring, Record Lift Arm (2)	59697
3. Spring, Back Stop Pawl	59710	11. Bracket and Nut Assembly	113216
4. Hub and Lever Assembly (2404 only)	59793	12. Spring, Actuator, Playmeter (2)	59894
5. Spring, Roller Arm	60677	13. Pinion	116997
6. Mounting Bracket		14. Motor and Pinion Assembly	69067
and Roller Assembly	60658	15. Guide Tip L.H. 60711	R.H. 61484
7. Bracket and Roller Assembly	59844	Lockwasher #2 Countersunk (4)	73606-1
8. Pivot Casting and Arm Assembly	113215	Screw, 2-56 x 3/16" F.H. (4)	73586-2

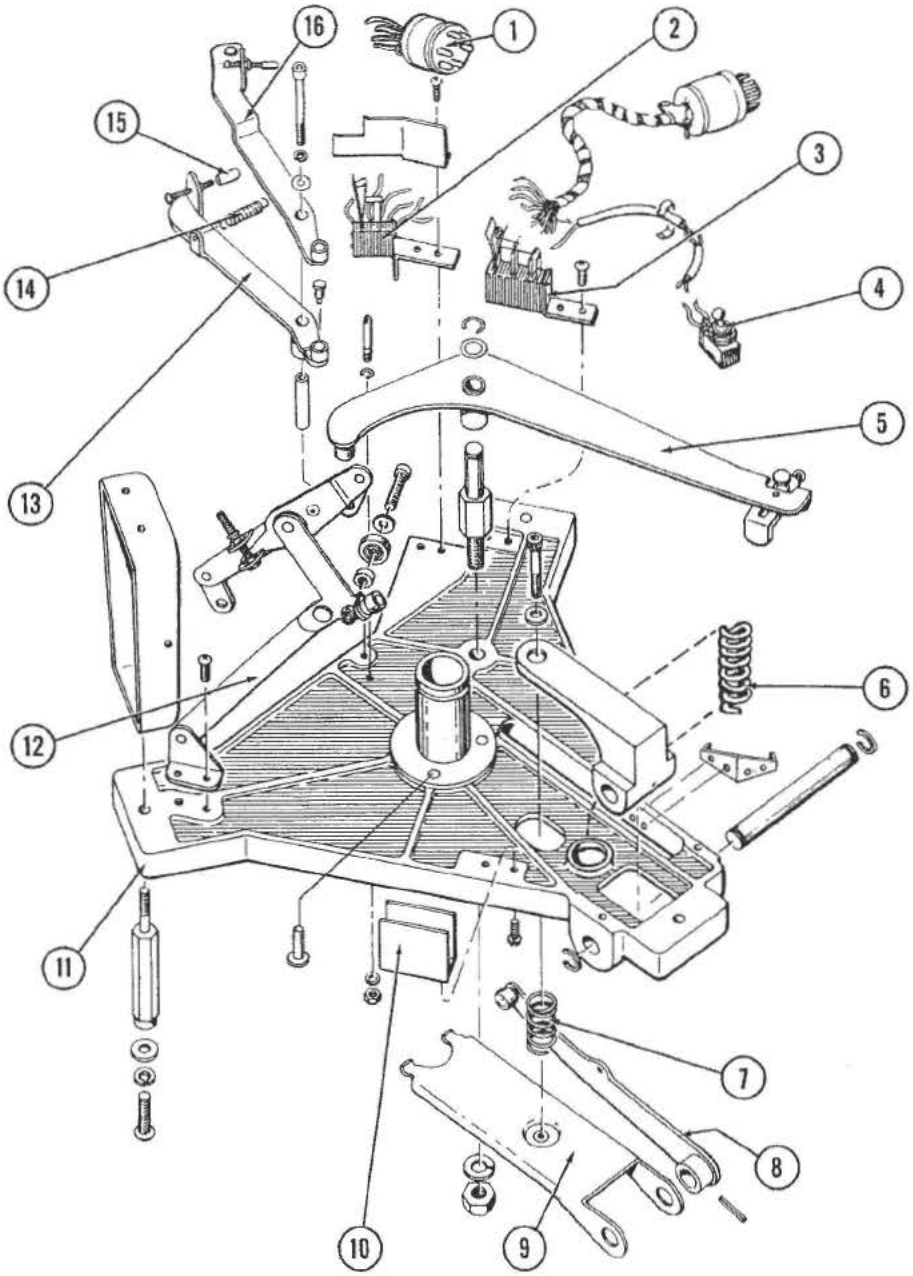

Fig. 133. CHASSIS FRAME CASTING AND SHAFT ASSEMBLY, 2404-2404S

1. Plug, 6 Prong	16607	9. Cancel Arm, Lower Assembly	59661
2. Mute and Play Switch and Bracket Assembly	65170	10. Bracket, Guide	110004
3. Transfer Switch and Bracket Assembly	59569	11. Casting, Chassis Frame and Shaft Assembly	115874
Over Center Spring, Stainless Steel	59569-2	12. Link and Lever Assembly, Record Arm	59599
4. Switch, Toggle, S.P.S.T.	53648	13. Actuator Arm Assembly	62761
5. Lever Assembly, Record Clamp	59688	14. Spring, Mute and Play Lever	62773
6. Spring, Cancel Arm Return	110934	15. Actuator, Nylon	58255
7. Spring, Cancel Arm	65809	16. Actuator Arm Assembly, Transfer Switch	113299
8. Cancel Lever, Hub and Roller Assembly	59513		

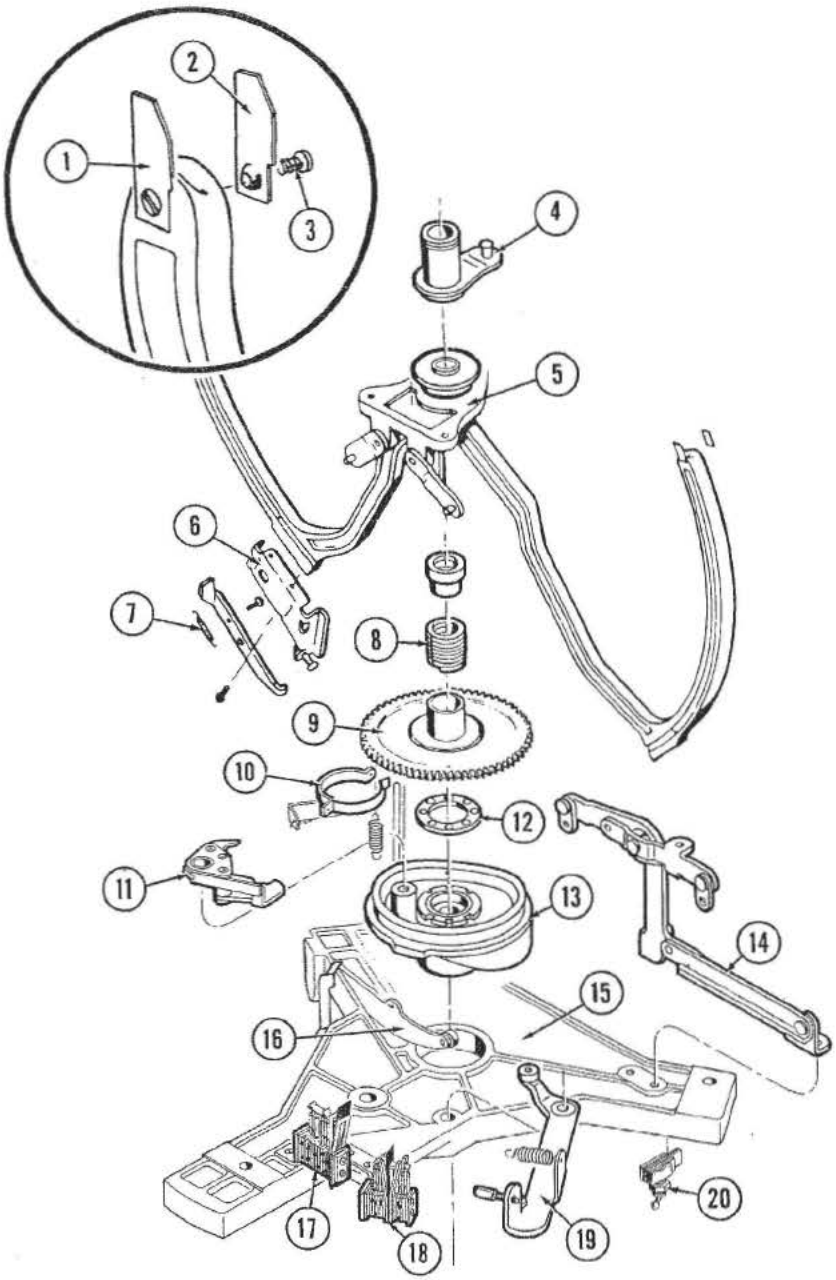

Fig. 134. RECORD CHANGER 2410-2410S

1. Guide Tip, L.H.	60711
2. Guide Tip, R.H.	61484
3. Screw, 2-56 x 3/16" F.H. (2)	73586-2
Lockwasher, Countersunk (2)	73606-1
4. Arm and Rivet Assembly	115668
5. Pivot Casting and Arm Assembly	113215
Ball Bearing	59654
6. Bracket and Nut Assembly	113216
7. Spring	59894
8. Spring, Drive Clutch	59584
9. Gear and Ratchet Wheel Assembly	116986
10. Strap and Spring Assembly	59626
Spring	59612
11. Pawl Assembly	59537
12. Ball Race	59637
13. Main Cam and Bushing Assembly	62792
14. Link and Lever Assembly	59599
15. Chassis Frame Casting and Shaft Assembly	115856
16. Cancel Lever Hub and Roller Assembly	59513
Spring, Return (Light)	65809
Spring, Cancel (Heavy)	110934
17. Transfer Switch and Bracket Assembly	59569
Toggle Spring, Stainless Steel	59569-2
18. Mute and Play Switch and Bracket Assembly	65170
Toggle Apring	65170-1
Fiber	65170-A
19. Actuator Arm Assembly, Mute and Play Switch	62761
Actuator	58255
20. Switch, Toggle	53648

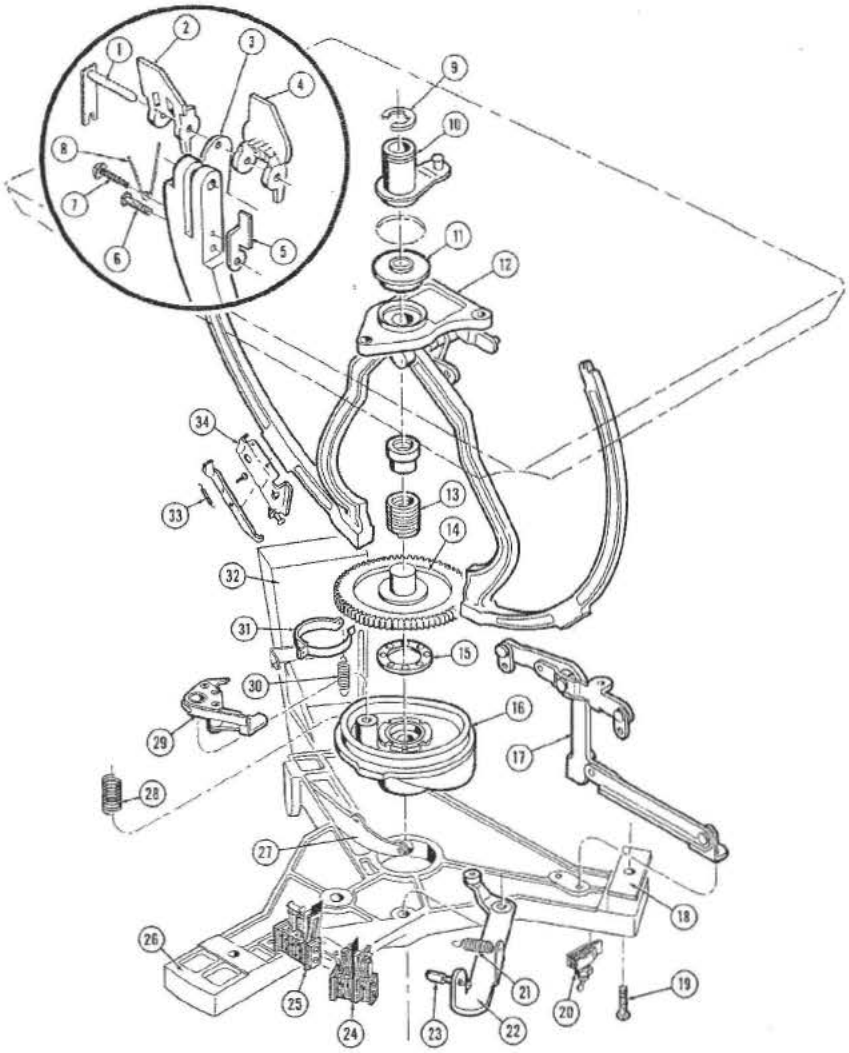

Fig. 135. RECORD LIFT ARM, MAIN CAM AND CHASSIS FRAME GROUPS, 2400-2400S

1. Plate and Pin Assembly	117252
2. Guide Tip, L.H.	65731
3. Guide Plate	68290
4. Guide Tip, R.H.	65730
5. Stop, Guide Tips	65526
6. Screw 4-40 x 5/8 R.H. Sems	73533-7
7. Screw, 3-48 x 7/16" R.H., Sems	73533-105
8. Spring	65812
9. Retaining Ring	73724-87
10. Arm and Rivet Assembly	115668
Roll Pin	73782-88
11. Ball Bearing	59654
12. Pivot Casting and Arm Assembly	113204
13. Spring, Drive Clutch	59584
Washer	110077
Felt Washer (2)	59655
Washer (2)	59647
14. Gear and Ratchet Wheet Assembly	116986
15. Ball Race	59637
Washer	59641
Retaining Ring	73727-112
Oil Guard	66580
16. Main Cam and Bushing Assembly	62792
17. Link and Lever Assembly Record Arm	59599
18. Tapping Plate (2)	68521
19. Screw, Hex	73793-151
20. Switch, Toggle	53648
21. Spring	62773
22. Actuator Arm Assembly, Play Switch	62761
23. Actuator (2)	58255
24. Mute and Play Switch and Bracket Assembly	65170
Toggle Spring	65170-1
25. Transfer Switch and Bracket Assembly	59569
Toggle Spring, Stainless Steel	59569-2
26. Chassis Frame and Shaft Assembly	116023
27. Cancel Lever Hub and Roller Assembly	59513
28. Spring	110934
29. Pawl Assembly	59537
30. Spring	59612
31. Strap and Spring Assembly	59626
32. Support Casting R.H. 67928 L.H.	68700
33. Spring, Playmeter Actuating Arm	59894
34. Bracket and Stop Nut Assembly (2)	113205

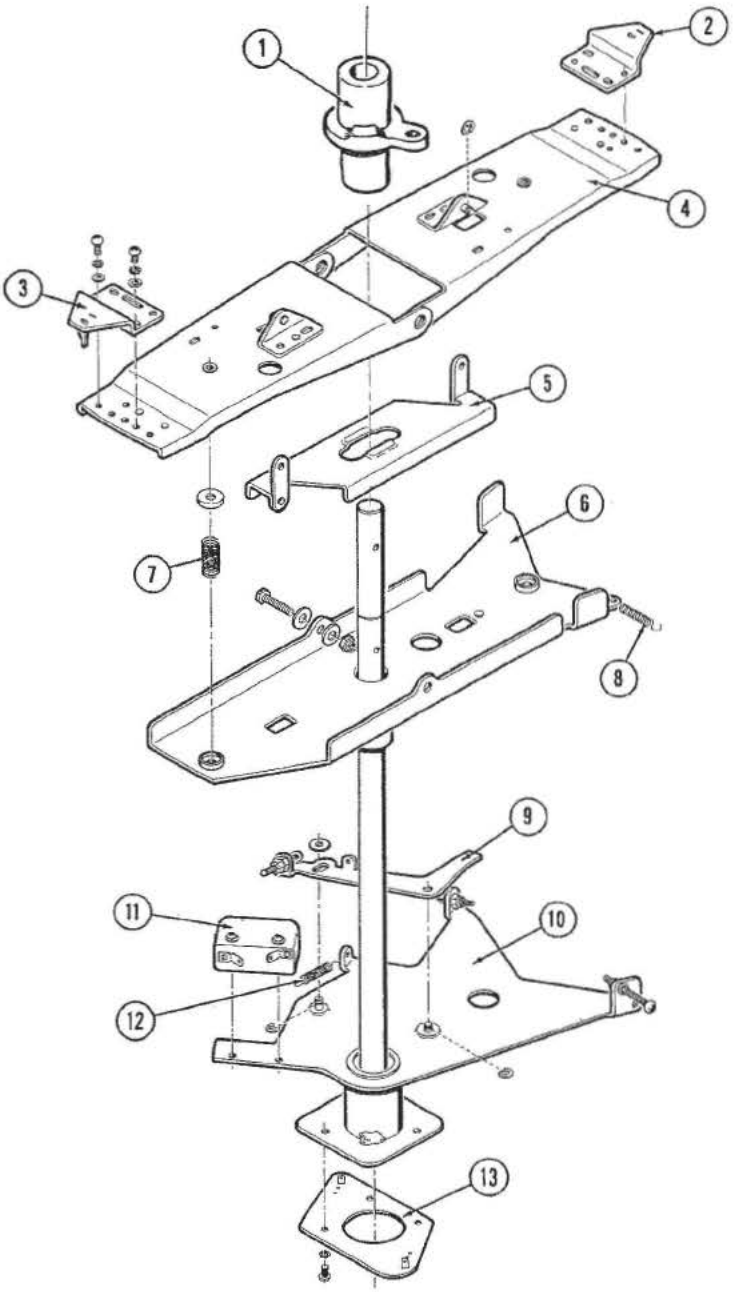

Fig. 136. SELECTOR CRANK AND SHAFT ASSEMBLY

MODEL 2400-2400S

1.	Sleeve and Bushing Assembly	68483
2.	Tip and Mounting Bracket Assembly, Inner	110936
3.	Tip and Mounting Bracket Assembly, Outer	110930
4.	Selector Crank and Stop Nut Assembly	110943
5.	Actuator Arm and Link Assembly	110939
6.	Mounting Plate and Stop Nut Assembly	110949
7.	Spring, Selector Crank	65809
8.	Spring, Kick-off	110480
9.	Switch Lever and Stop Nut Assembly	110937
10.	Selector Shaft Assembly	115669
11.	Micro Switch	60655
12.	Spring Switch Lever	68774
13.	Contact Plate Assembly	68582

MODEL 2410-2410S

1.	Sleeve and Bushing Assembly	115772
2.	Tip and Mounting Bracket Assembly, Inner	116733
3.	Tip and Mounting Bracket Assembly, Outer	116732
4.	Selector Crank and Stop Nut Assembly	115770
5.	Actuator Arm and Link Assembly	115767
6.	Mounting Plate and Bushing Assembly	115761
7.	Spring, Selector Crank	65809
8.	Spring, Kick-off	116737
9.	Switch Lever and Stop Nut Assembly	115765
10.	Selector Shaft Assembly	115752
11.	Micro Switch	60655
12.	Spring Switch Lever	68774
13.	Contact Plate Assembly	115769

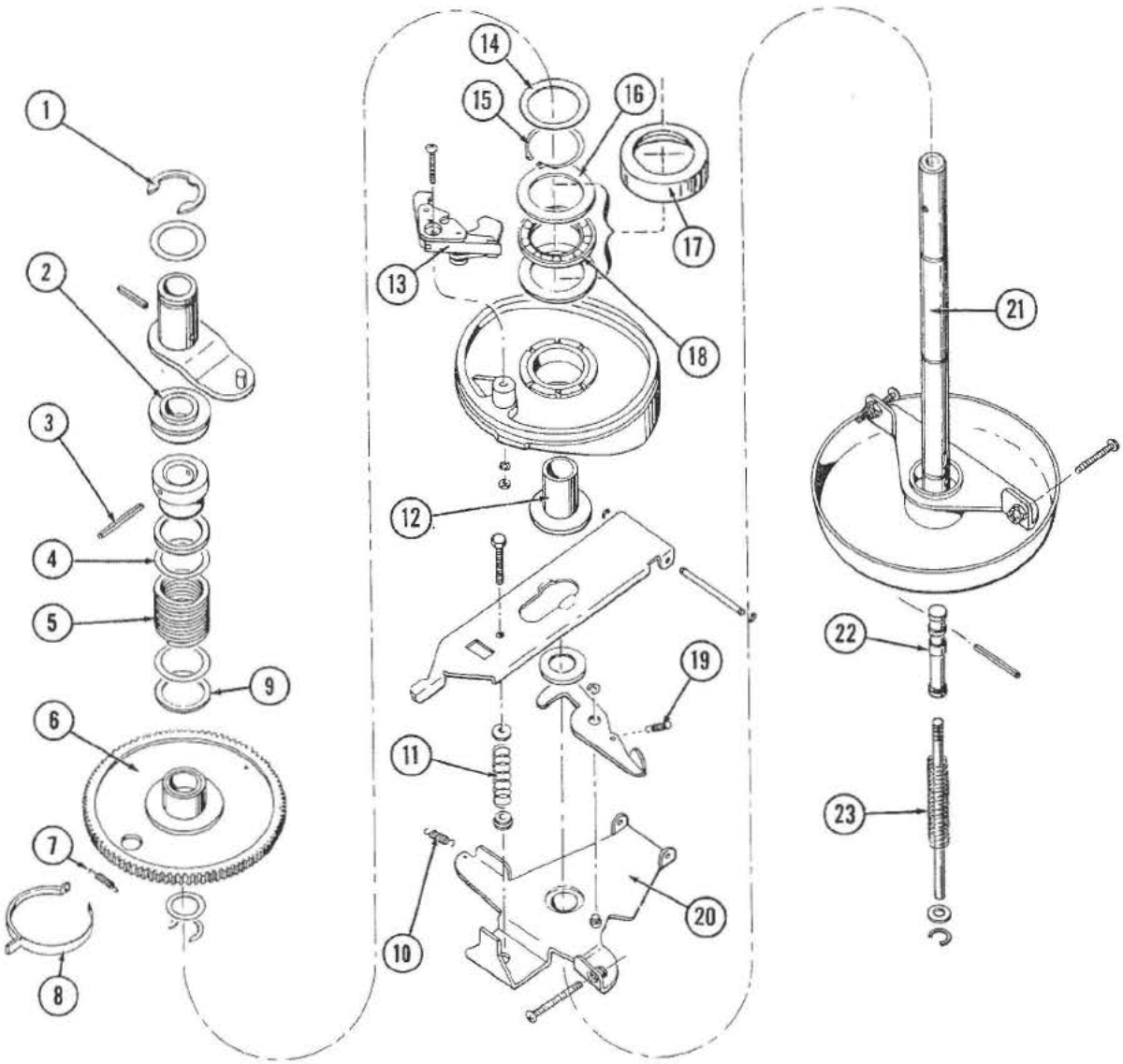

Fig. 137. SELECTOR SHAFT ASSEMBLY AND MAIN CAM AND BUSHING ASSEMBLY, 2404 - 2404S

1. Retaining Ring	73724-87	13. Pawl Assembly	59537
2. Ball Bearing, Selector Shaft	59654	14. Washer	110077
3. Roll Pin	73782-88	15. Retaining Ring	73727-112
4. Washer (2)	59647	16. Washer (2)	59641
5. Spring, Selector Drive Clutch	59584	17. Oil Guard	66580
6. Gear and Ratchet Wheel Assembly	116986	18. Ball Race, Main Cam Shaft	59637
7. Spring, Friction Drive Gear	59612	19. Spring, Release Arm	59613
8. Strap and Spring Assembly		20. Mounting Plate Assembly	59516
Friction,Drive Pawl	59626	21. Selector Shaft and Clutch Assembly	59666
9. Felt Washer (2)	59655	22. Plunger	59642
10. Spring, Kick-off	59614	23. Actuator	115143
11. Spring, Selector Crank	57107	Spring, Selector Shaft Plunger	59609
12. Sleeve, Cancel Arm	59657	Washer 59659 C, Inside	73783-37

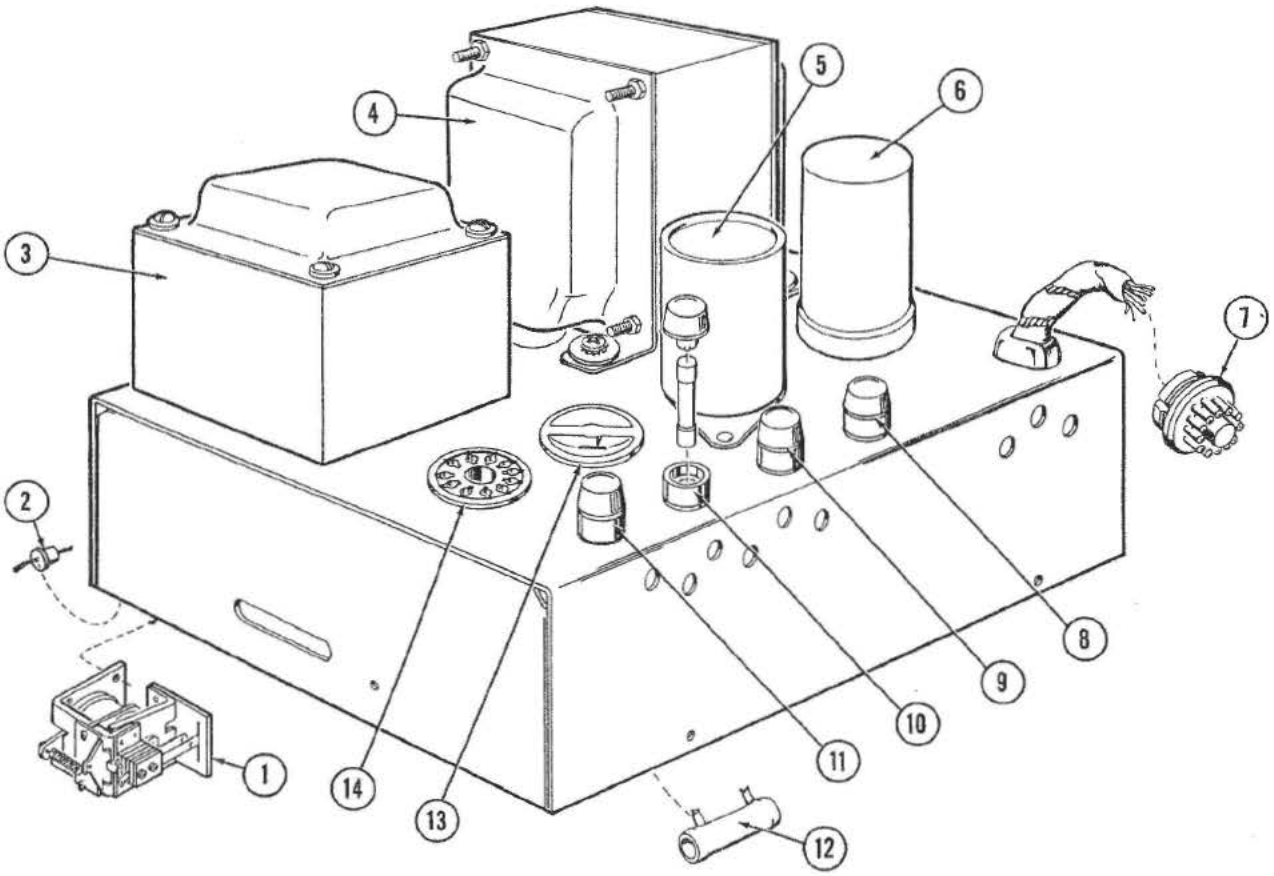

Fig. 138. POWER SUPPLY, STEREO

1. Relay Override	56321	8. Fuse Post (4)	51485
2. Rectifier, Silicon, Green	71588-2	Fuse, 1.6 Amp., Slo-Blow	71591-15
Brown	71588-1	9. Fuse, 8 Amp.	71590-33
Red	71588-3	10. Fuse, 3 Amp.	71590-22
3. Transformer, Amplifier	116645	11. Fuse, 2 Amp., Slo-Blow	71591-19
4. Transformer, Low Voltage	116644	12. Resistor, 8 Ohms 10W	73476-2
5. Capacitor, 100 Mfd, 250V	71595	Resistor, 1.5 Ohms 10W	73479-2
6. Capacitor, 100 Mfd and 20 Mfd.	71594	13. Socket, 2 Pin	13037
7. Plug, 12 Prong	114324	14. Socket, 11 Prong	38492

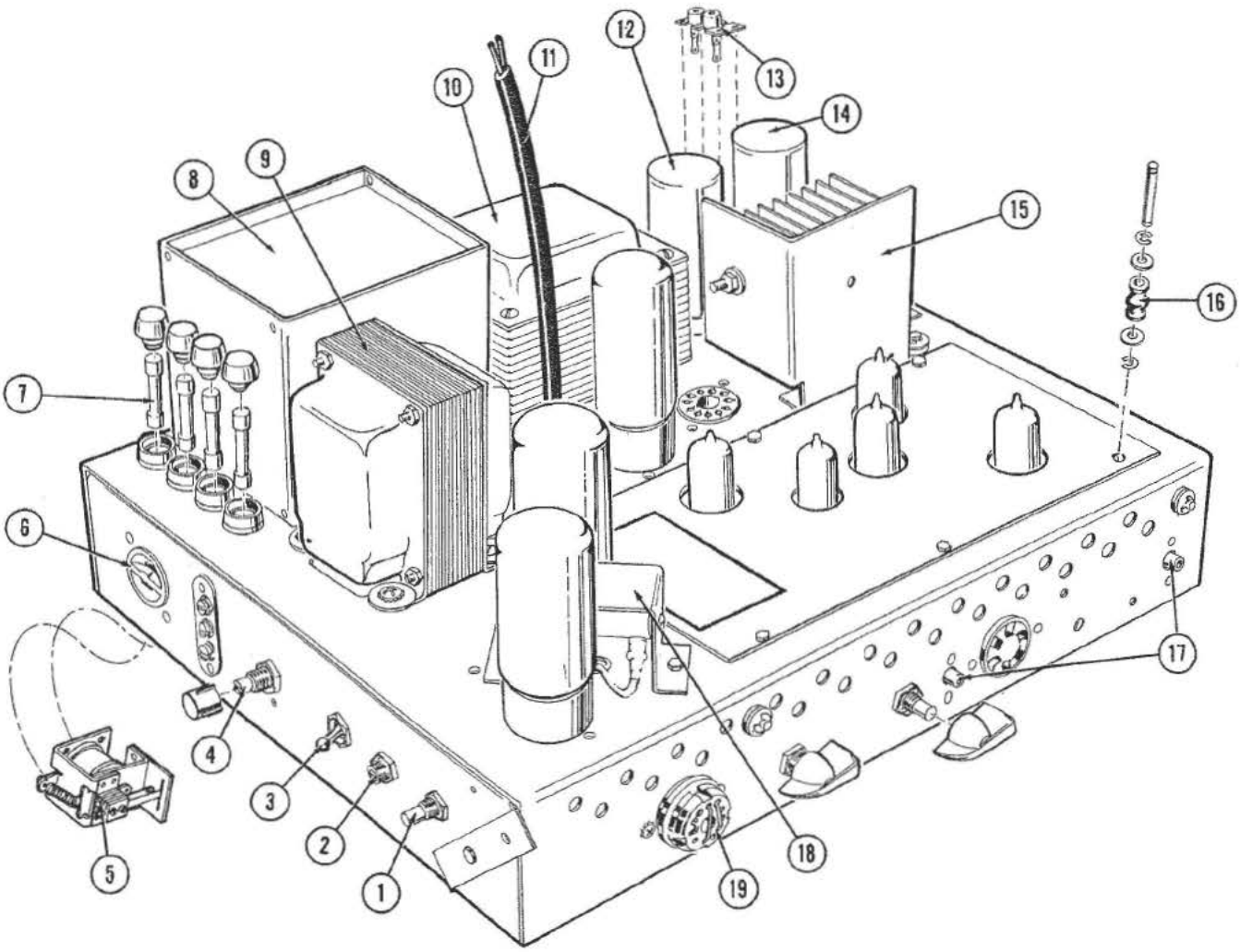

Fig. 139. 536 AMPLIFIER

1. Switch, Cancel	68770
2. Volume Control	64996
3. Switch, Power	48836
4. Switch, Fader	62507
Seal Cap, Plastic	115866
5. Relay, Over-ride	56321
6. Socket, 2 Prong	13037
7. Fuse Post	51485
Fuse, 2 Amp., Slo Blo	56325
Fuse, 15 Amp.	52196
Fuse, 8 Amp.	15845
8. Transformer, Amplifier	112631
9. Transformer, Output	62430
10. Transformer, Low Voltage	112632
11. Line Cord	67464
12. Electrolytic Capacitor 20-20-10-20	73474
13. Receptacle, Dual Single Prong	113420
14. Electrolytic Capacitor 30-20-20-25	73475
15. Rectifier, Selenium	56188
16. Isolator (4 used)	15137
17. Socket, Single Prong	43341
18. Bracket and Resistor Assembly	68771
Resistor	70897
19. Plug and Wire Assembly, Shorting	65462
Socket, 11 Prong (2 Used)	38492

TUBE LIST

12AU7A	58420
6AU6	64858
12AX7 (2)	58427
6AN8	64914
5U4GB	62742
6L6GB (2)	28157

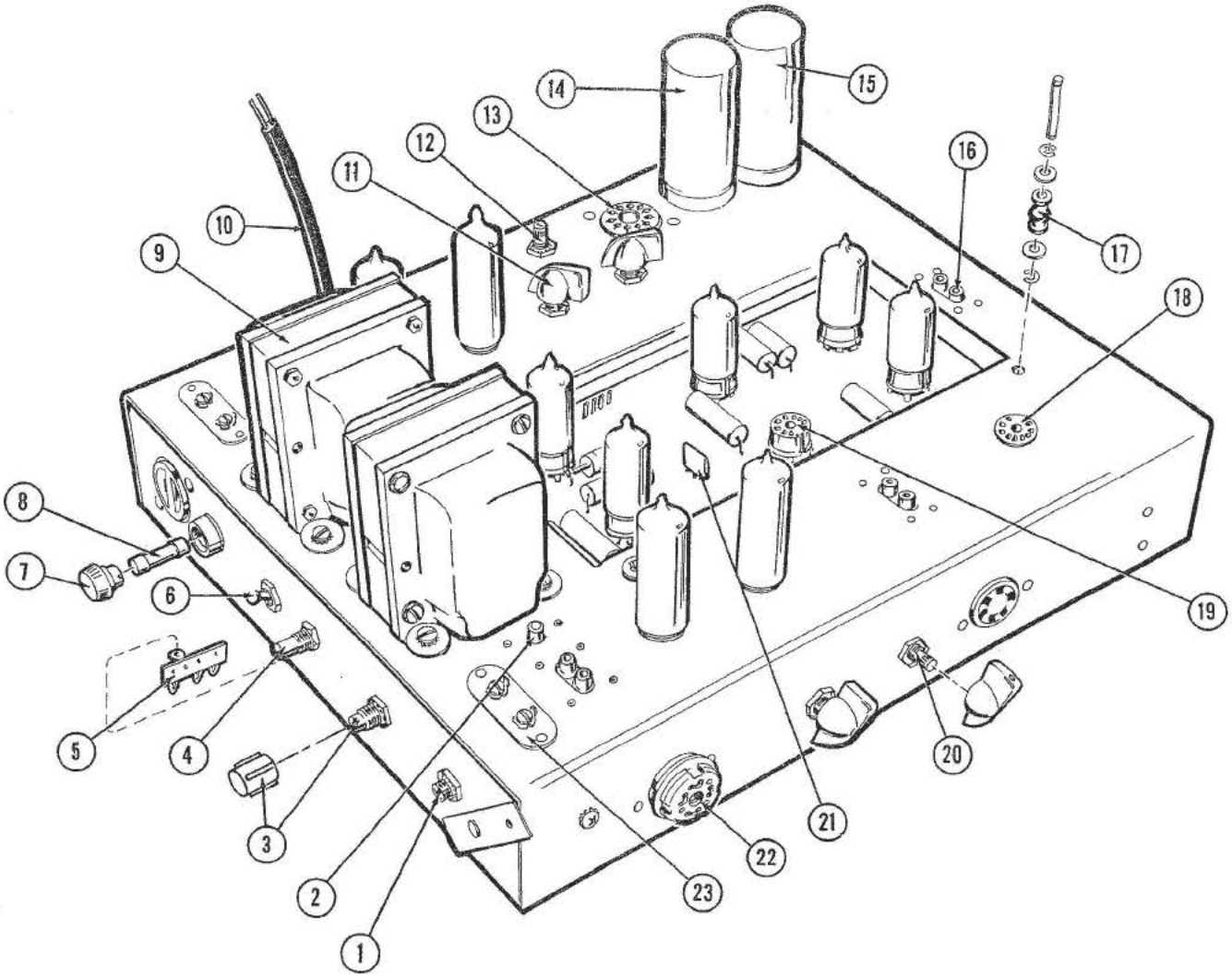

Fig. 140. 538 AMPLIFIER

1. Volume Control		114264
2. Socket, Single Prong		43341
3. Switch Fader		113936
Cap, Plastic		115866
4. Switch, Cancel		68770
5. Insulated Mounting Strip, 3 Terminal		20812
Mounting Bracket and Terminal Assembly, 4 Terminal		114412
6. Switch, Power		53648
7. Fuse Post		51485
8. Fuse, 15 Amp.		71590-48
9. Transformer, Audio		114259
10. Line Cord		67464
11. Knob,	Black 20263	Red 114527
12. Potentiometer, Balance		114463
13. Socket, 12 Prong		114325
14. Capacitor, Electrolytic 30-20-20-25		73475
15. Capacitor, Electrolytic 20-20-150		74150
16. Receptacle, Dual Single Prong		113420
17. Isolator		15137
Stud		66378
Washer		53638
Retaining Ring		73724-18
18. Socket, 9 Prong Miniature (5)		58425
19. Socket, 9 Prong		64920
20. Switch, Bass and Treble		64857
21. Tone Control, Treble, Printed Circuit		112231
22. Plug and Wire Assembly, Stereo		114489
Socket, 11 Prong		38492
23. Insulated Mounting Strip		18831

TUBE LIST

7025 (2)	114046
12AU7 A (2)	58420
12AX7 (3)	58427
6973 (4)	114048

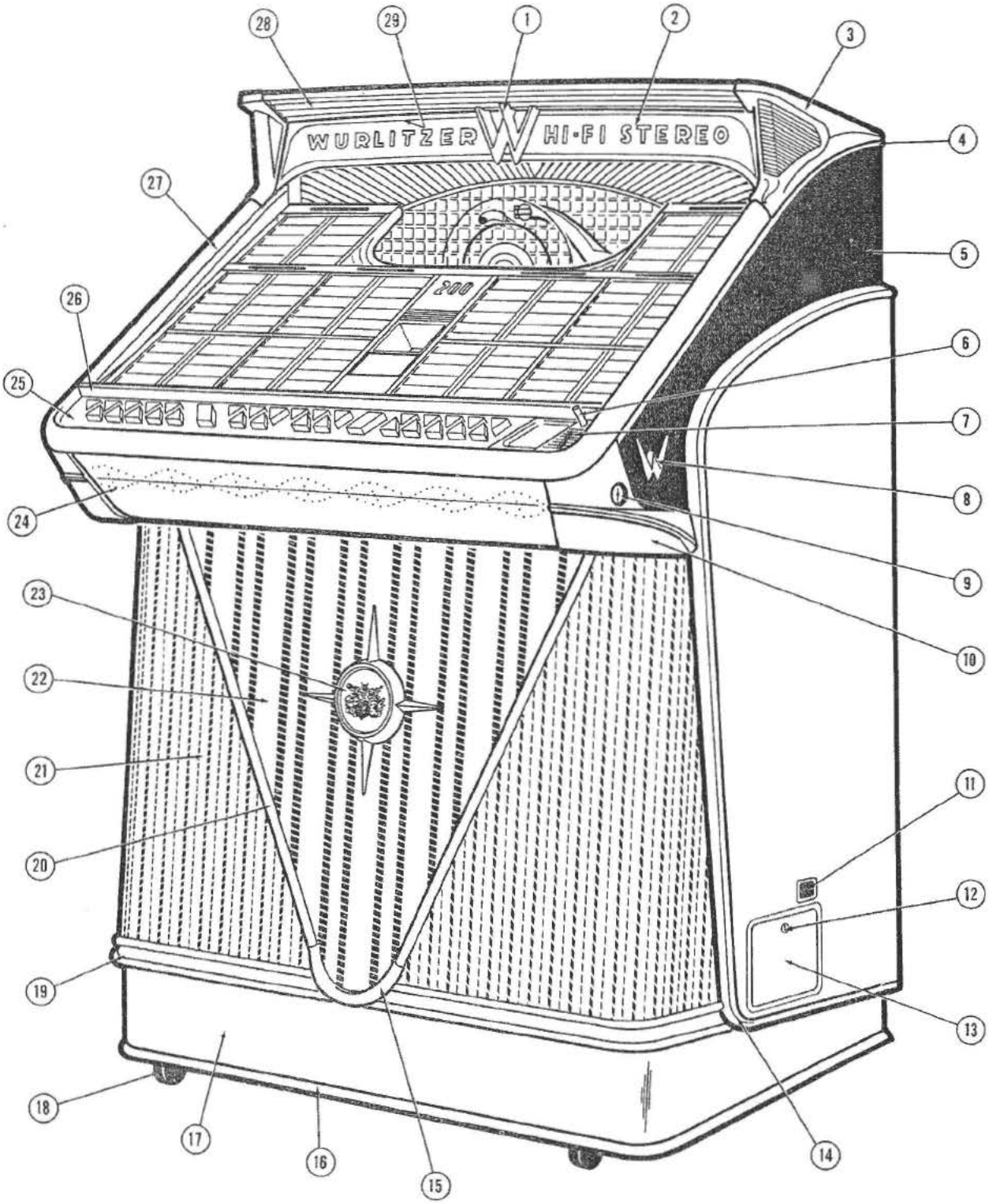

Fig. 141. TRIM AND MOUNTING - FRONT VIEW.

Fig. 141. TRIM AND MOUNTING - FRONT VIEW

1. "W" Casting, Dome			116151
2. Glass, Stereo			116235
Glass, Hi-Fi			116236
3. Top Casting, Dome	R.H. 116155	L.H.	116156
4. Extrusion, Side Plate	R.H. 116188	L.H.	116189
5. Side Plate Assembly	R.H. 116341	L.H.	116342
Decorative Side, Dinoc	R.H. 116594	L.H.	116596
Welding Solution			60195
Dinoc, Lower Panel	R.H. & L.H.		116647-A
Tinnerman Nut			71587-5
6. Reject Button			113327
7. Casting, Window and Coin Entry		R.H.	116157
Casting, Window (Model 2410 Only)		L.H.	116158
Coin Stop Bracket			114026
8. "W" Casting		L.H. & R.H.	116152
"W" Casting, Tinnerman Nuts			73834-4
9. Lock Assembly		L.H. & R.H.	116503
Key			RW90
Lock Strike Assembly			117005
10. Cheek Casting	R.H. 116153	L.H.	116154
11. Coin Cup			68172
Anti-cheat Guard and Bracket Assembly			116216
12. Lock and Key, Cash Box			113291
13. Coin Box Door			116180
Frame, Coin Box Door			116715
Catch Plate, Lock			116428
14. Extrusion, Side	R.H. 116183	L.H.	116184
15. Casting, Lower Grille			116150
16. Extrusion, Bottom			116196
17. Cover, Cabinet Base			116327
18. Caster (4 Used)			110680
Socket, Caster			69569
19. Extrusion, Lower Grille	L.H. 116198	R.H.	116197
20. Extrusion, Grille	L.H. 116194	R.H.	116195
21. Grille, Screen	L.H. 116231	R.H.	116232
22. Grille Screen, Center			116230
23. Star Casting, Grille			116149
Medallion			116073
24. Grille Plate			116248
Shield, Grille Plate			116585
25. Plate, Program Selector (2400)			116263
Plate, Program Selector (2410)			116261
Plate, Program Selector (2404)			116262
26. Extrusion, Lower Door Glass			116193
27. Extrusion, "U" Door Glass			116185
28. Extrusion, Top			116203
29. Wire, Plug and Socket Assembly, Dome			116606

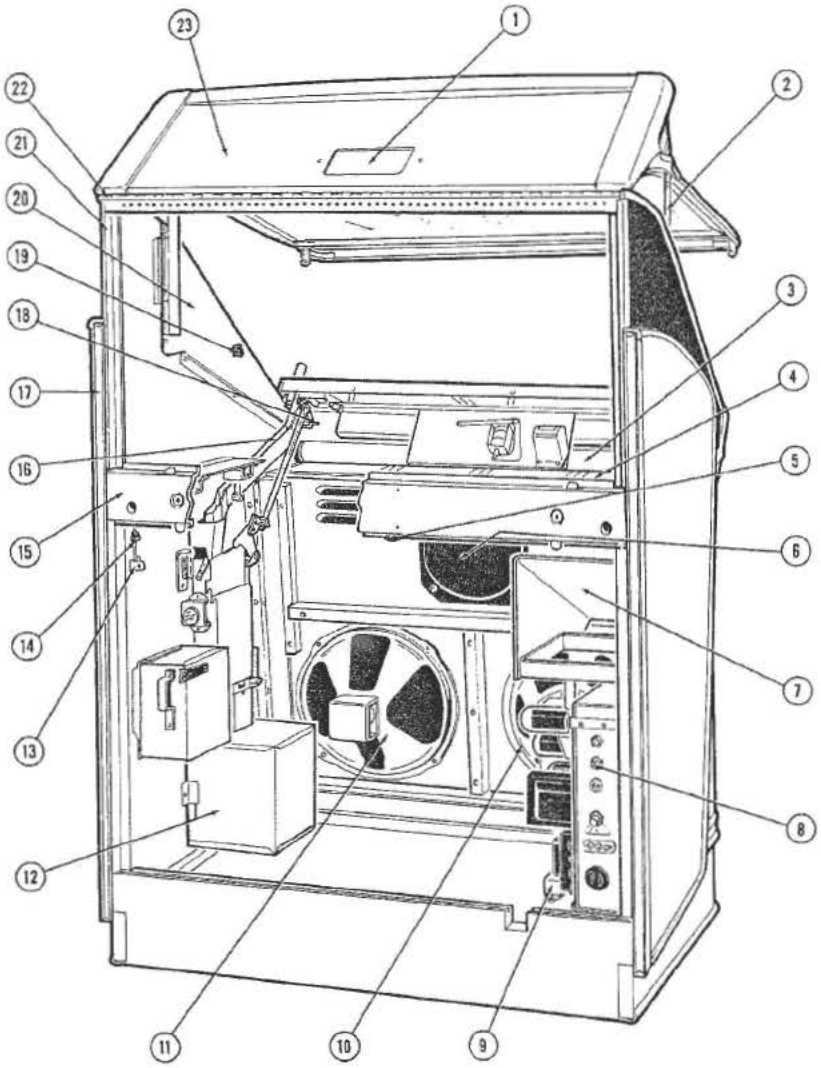

Fig. 142. TRIM AND MOUNTING - REAR VIEW

1. Glass, Card Holder	113654	9. Light Ballast Assembly	110996
Service Card	113849	Plug, 2 prong	53672
Card Holder	113651	Shell, 2 prong plug	53671
Screw, 8-32 x 3/8", Truss Hd.	73787-87	10. Heavy Duty Speaker	114006
2. Fall Support Assembly	116570	11. Middle Range Speaker	65192
Spring, Fall Support	116453	12. Coin Bag Housing Assembly	116352
3. Flourescent Lamp	110965	Coin Bag	62670
Flourescent Starter Switch	57365	13. Bracket for Dual Price Service	117244
Lamp Socket, Flourescent	53673	14. Centering Shaft Assembly	115043
Socket, Starter, Flourescent	53674	15. Back Rail Assembly	116581
4. Light Diffuser Assembly, Glass	116604	16. Coin Chute Assembly	116303
Gasket, Light Diffuser	114888	17. Extrusion, Rub Rail L.H. 116191	R.H. 116190
5. Spring, Back Door Lock	69104	18. Stud, Reject Lever	113314
6. 7" Speaker	114054	Torsion Spring	113906
Mounting Plate and Weld Screw Assembly	114094	19. Spring Stop and Bracket Assembly L.H. 116336	R.H. 116337
Cover	114058	20. Liners L.H. 116510	R.H. 116511
7. Heat Shield	116735	21. Extrusion, Side Plate L.H. 116186	R.H. 116187
Support Bracket Assembly, Heat Shield	116740	22. Hinge, Dome	116458
8. Key, Volume Control	984	23. Top Plate	116461

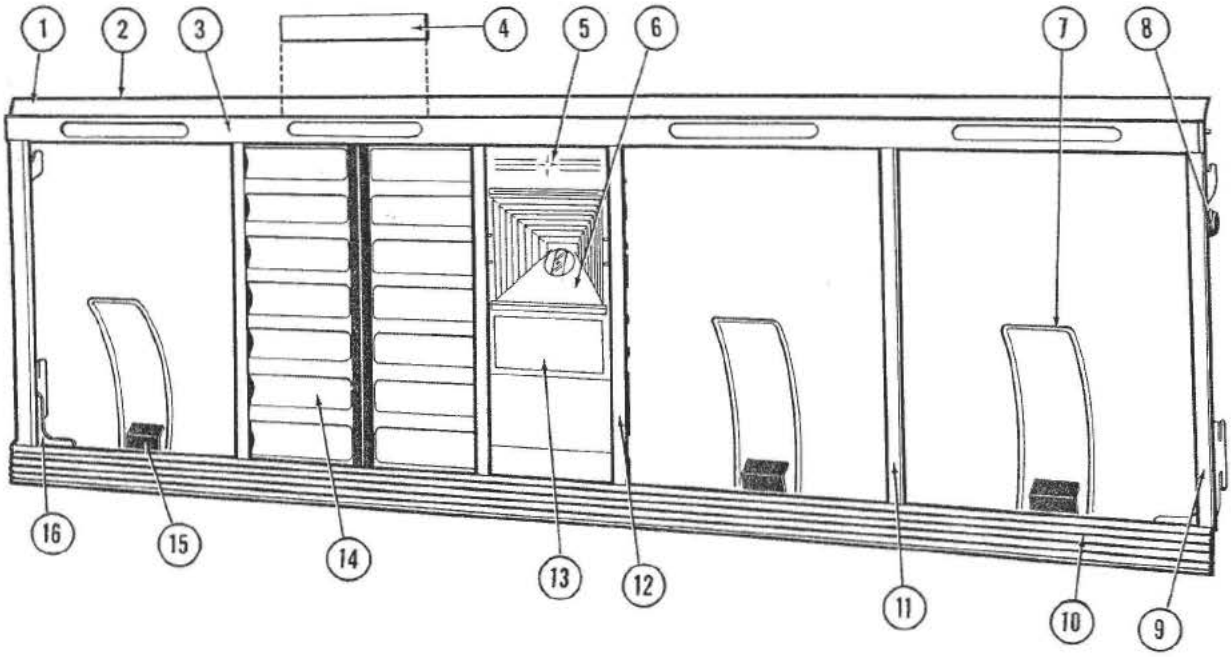

Fig. 143. PROGRAM HOLDER ASSEMBLY, 2404-2404S

1. Program Holder and Frame Assembly	116392
2. Extrusion, Top	116272
3. Extrusion, Top	116277
4. Classification Slip, "E.P. Show Albums"	113824
"Country and Western"	113820
"Rhythm and Blues"	113821
"Rock and Roll"	113822
"New Pop Records"	113823
"Classical and Old Favorites"	113826
"Jazz and Novelty"	113827
"Polkas and Waltzes"	113828
"Wurlitzer Music" (4)	113818
"Today's Top Tunes" (2)	113819
5. Spacer	116381
6. Record Indicator Panel	116331
7. Spring 113700, Clamp 113697, Rivet (20)	71596-114
8. Rubber Bumper 115109 Rivet (6)	71596-116
9. Extrusion, Vertical End	116274
10. Extrusion, Bottom	116273
11. Extrusion, Vertical Intermediate (2)	116275
12. Extrusion, Vertical Center (2)	116276
13. Instruction Panel	116380
14. Program Holder and Silk Screen Assembly	
A1 - A26	116436
B1 - B26	116437
C1 - C26	116438
D1 - D26	116439
Descriptive Escutcheons, 2404	
"Pressing Reset Button Corrects Error in Letter or Number Choice"	116431
"You Get Bonus Tunes for Each Half Dollar"	116432
"Make Selections Until Light Goes Out"	116433
"Bent Coin Return Plunger Located Beside Coin Entry"	116434
"Your Favorite Recording Artists Offer the Music of Your Choice"	116435
15. Clamp	113697
16. Reinforcement Bracket, L.H.	113959
Reinforcement Bracket, R.H.	113958

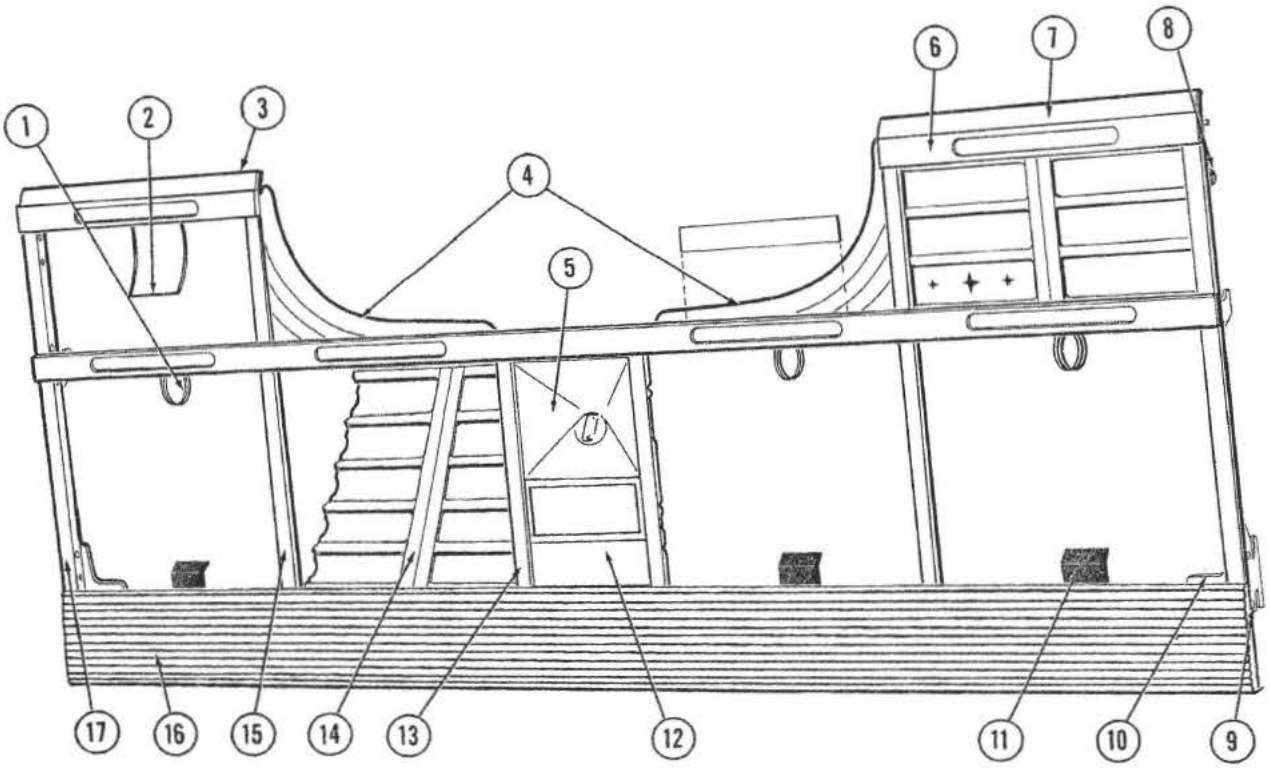

Fig. 144. PROGRAM HOLDER ASSEMBLY 2410

1. Torsion Spring 115054
   Spring Plate 115056
2. Spring 113716
   Spring Clamp (2) 113697
3. Program Holder Assembly 116562
4. Gusset L.H. 116148
   Gusset R.H. 116147
   Speed Nut (8) 73658-8
5. Record Indicator Panel 116331
6. Extrusion, Top 116305
7. Extrusion, Top 116291
8. Rivet (2) 71596-118
9. Rivet (4) 71596-116
10. Reinforcing Bracket. R.H. 113958 L.H. 113959
11. Spring Clamp (4) 113699
12. Instruction Panel 116519
    Label, Coin Denomination 116563

    Stereo and E.P. Selections
    5 Plays Half Dollar
    2 Plays Quarter
    1 Play 15¢

    Single Tune Selections
    7 Plays Half Dollar
    3 Plays Quarter
    1 Play 10¢

    Label, Coin Denomination 116722-S

    Stereo and E.P. Selections
    6 Plays Half Dollar
    2 Plays Quarter
    1 Play 10¢

    Single Tune Selections
    9 Plays Half Dollar
    4 Plays Quarter
    1 Play 10¢

    Label, Coin Denomination 116767-S

    Stereo and E.P. Selections
    6 Plays Half Dollar
    2 Plays Quarter
    1 Play 15¢

    Single Tune Selections
    10 Plays Half Dollar
    4 Plays Quarter
    1 Play 10¢

13. Extrusion, Vertical Center (2) 116289
14. Program Holder and Silk Screen Assembly
    A1-A0 116362
    B1-C0 116363
    D1-E0 116364
    F1-G0 116365
    H1-H0 116367
    J1-K0 116366
15. Extrusion, Inter R.H. 116386 L.H. 116287
16. Extrusion, Button 116290
17. Extrusion, Vertical End (2) 116288

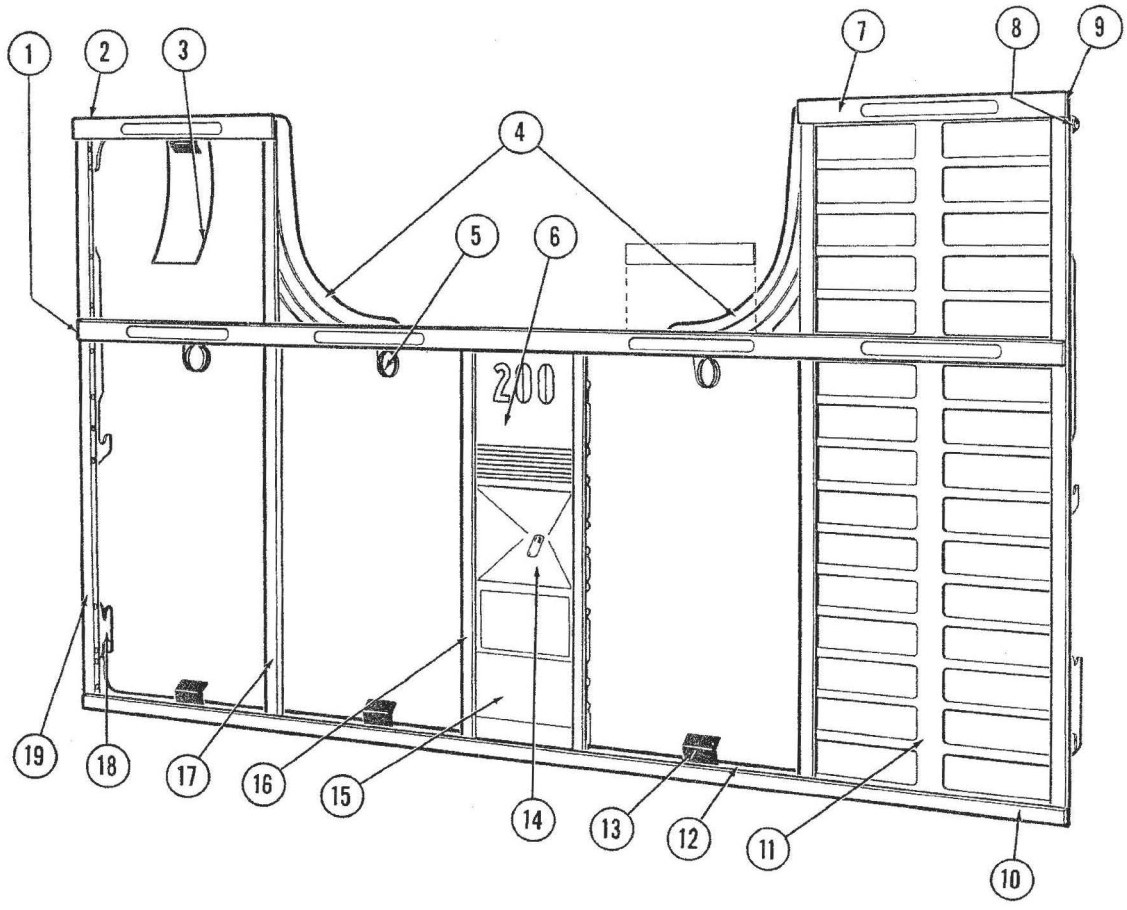

Fig. 145. PROGRAM HOLDER ASSEMBLY 2400

1. Extrusion, Center Outer 116277 Inner 116282
2. Program Holder Assembly 116566
3. Spring 113700
4. Gusset R.H. 116147 L.H. 116148
5. Torsion Spring 115054
   Spring Clamp 115056
6. Spacer, Record Indicator Panel 116491
7. Extrusion, Top 116284
8. Rubber Bumper 115109
   Rivet 71596-118
9. Extrusion, Top 116305
10. Extrusion, Bottom 116283
11. Program Holder and Silk Screen Assembly
    A1 - B0 116354
    C1 - F0 116355
11. Program Holder and Silk Screen Assembly Cont'd
    G1 - K0 116356
    L1 - P0 116357
    Q1 - R0 116359
    S1 - V0 116358
12. Reinforcing Angle, Bottom 116304
    Rivet 71596-114
13. Spring Clamp Lower 113699 Upper 115056
14. Record Indicator Panel 116331
15. Instruction Panel 116507
16. Extrusion, Vertical Center (2) 116285
17. Extrusion, Intermediate, L.H.
    L.H. 116279 R.H. 116280
18. Reinforcing Bracket, L.H. 113959 R.H. 113958
19. Extrusion, Vertical End (2) 116281

INDEX TO ADJUSTMENTS...2400 SERIES

COMBINED NUMERICAL PARTS LIST

Part No.	Description	Page No.	2400	2400S	2404	2404S	2410	2410S
RW 90	Key	95	x	x	x	x	x	x
984	Key, Volume Control	96	x	x	x	x	x	x
10964	Socket, 8 Prong	76	x	x			x	x
13037	Socket, 2 Prong	91, 92	x	x	x	x	x	x
13089	Plug, 5 Prong	69	x		x		x	
15137	Isolator	92, 93	x	x	x	x	x	x
15845	Fuse, 8 Amp., Little Fuse or Bussman, M.T.H.	92	x	x	x	x	x	x
16607	Plug, 6 Prong	80, 86	x	x	x	x	x	x
16617	Plug, Female, 5 Prong	2, 69	x		x		x	
18831	Insulated Mounting Strip	93	x	x	x	x	x	x
20263	Knob, Tone Control	93	x	x	x	x	x	x
20812	Mounting Strip, Cinch, 3 Lug, Insulated	93	x	x	x	x	x	x
23879	Stop Nut, Elastic	12, 30	x	x	x	x	x	x
24689	Lamp, 6.3V, G.E., No. 44	71, 72, 73	x	x	x	x	x	x
25202	Steel Ball	81	x	x	x	x	x	x
28157	Tube, Type 6L6GB	92	x		x		x	
30495	Socket, 4 Prong	76, 79	x	x	x	x	x	x
32881	Socket, 6 Prong	74, 76, 79	x	x	x	x	x	x
38492	Socket, 11 Prong	40, 75, 76, 79, 91, 92, 93	x	x	x	x	x	x
X42226	Record Disc	31	x	x	x	x	x	x
42868	Adjusting Cam, Eccentric Hex Hd.	6, 69	x		x		x	
43341	Socket Connector, Single Prong	82, 92, 93	x	x	x	x	x	x
45345	Electric Counter	10, 71, 72, 73	x	x	x	x	x	x
45352	Fuse Post	74, 79	x	x	x	x	x	x
45509	Fuse 4/10 Amp. Fusetron	74			x	x		
45663	Accumulator Coil	70		x				x
45787	Coil and Lamination Assembly Accumulator	8		x				x
48501	Plug, 11 Prong	75	x	x	x	x	x	x
48836	Opt. Toggle Switch, S.P.S.T.	92	x	x	x	x	x	x
49884	Grommet, Turntable Motor	29, 81	x	x	x	x	x	x
50324	Acorn Nut, Tone Arm Brush	80	x	x	x	x	x	x
51485	Fuse Post	2, 40, 69, 76, 91, 92, 93	x	x	x	x	x	x
52196	Fuse, 15 Amp., Type A.B.C.	92	x	x	x	x	x	x
53489	Spring, Selector Rockers	74			x	x		
53638	Washer	93	x	x	x	x	x	x
53648	Opt., Toggle Switch, S.P.S.T.	86, 87, 88, 93	x	x	x	x	x	x
53671	Shell	96	x	x	x	x	x	x
53672	Plug	96	x	x	x	x	x	x
53673	Socket, Fluorescent Lamp	96	x	x	x	x	x	x
53674	Socket, Starter	96	x	x	x	x	x	x
53774	Conical Spring, Chassis Mount (Red Dot)	84	x	x	x	x	x	x
54024	Washer	19, 20	x	x				
54246	Bumper	11, 71, 72, 73, 84, 85	x	x	x	x	x	x
54878	Plug, 11 Prong	15, 35, 78, 79	x	x	x	x	x	x
56188	Rectifier, Selenium	92	x		x		x	
56321	Relay, Override	40, 91, 92	x	x	x	x	x	x
56325	Fuse, 2Amp., Type 3A, G. Slo Blo	92	x	x	x	x	x	x
56530	Washer, Special	32, 82	x	x	x	x	x	x
56592	Roller and Bearing Assembly	27	x	x	x	x	x	x
56594	Roller, Transfer Switch, Actuating Arm	26	x	x	x	x	x	x
56628	Stop Bracket, Latch Solenoid	11, 71, 72, 73	x	x	x	x	x	x
56704	Switch Assembly Control	72, 73	x					
56712	Pawl, Stud and Spacer Assembly, Numbers	11, 12	x	x	x	x	x	x
56713	Release Lever, Stud and Spacer Assembly.	71, 72, 73	x	x	x	x	x	x
56714	Trip Lever and Stud Assembly	12, 71, 72, 73	x	x	x	x	x	x

Part No.	Description	Page No.	2400	2400S	2404	2404S	2410	2410S
57107	Spring, Selector Crank	90			x	x		x
57110	Spring, Selector Latch Pin	74, 76			x			x
57128	Spring, Retracting, Letter Latch	10, 71, 72, 73	x	x	x	x	x	x
57129	Retracting Spring, Number Latch	10, 71, 72, 73	x	x	x	x	x	x
57130	Spring, Solenoid Return	10, 11, 71, 72, 73	x	x	x	x	x	x
57365	Fluorescent Starting Switch, 25W.	96	x	x	x	x	x	x
57525	Pick-Up, Cobra, Green	29, 31	x		x			x
57851	Micro Switch	31, 80	x	x	x	x	x	x
58255	Actuator, Switch Contact	4, 5, 26, 69, 86, 87, 88	x		x		x	x
58420	Tube, Type 12AU7	92, 93	x	x	x	x	x	x
58425	Socket, Miniature, 9 Prong	93	x	x	x	x	x	x
58427	Tube, Type 12AX7	92, 93	x	x	x	x	x	x
58781	Cancel Spring	69, 70	x		x		x	x
59042	Needle and Cartridge Assembly (Green)	80	x		x		x	x
59280	Thumb Screw	78					x	x
59351	Rubber Washer, .092" x .218" x 1/16"	80		x		x	x	x
59394	Pivot Screw	80	x	x	x	x	x	x
59396	Bumper, Record Guide	22, 81	x	x	x	x	x	x
59399	Screw, Special	32	x	x	x	x	x	x
59406	Arm and Hub Assembly, Tone Arm Release	82	x	x	x	x	x	x
59415	Drive Pulley, Turntable Clamp	32	x	x	x	x	x	x
59418	Spring, Record Clamp	82	x	x	x	x	x	x
59423	Washer, Shaft	82	x	x	x	x	x	x
59424	Spring, Record Pilot	82	x	x	x	x	x	x
59425	Track, Record Guide	21, 81	x	x	x	x	x	x
59432	Stop Bracket, Trip Switch	31	x	x	x	x	x	x
59434	Stop Bracket, Record Track	21, 81	x	x	x	x	x	x
59449	Pilot, Turntable	28	x	x	x	x	x	x
59456	Fly Wheel, Turntable	32	x	x	x	x	x	x
59464	Cam, Record Clamp	27, 32	x	x	x	x	x	x
59467	Casting, Rear, Record Guide	81	x	x	x	x	x	x
59470	Nut, 7/16"-20, Special	32	x	x	x	x	x	x
59484	Release Arm, Turntable	27	x	x	x	x	x	x
59485	Roller, and Shaft Assembly	18, 27, 32	x	x	x	x	x	x
59487	Guide Pulley	32	x	x	x	x	x	x
59513	Cancel Lever Hub and Roller Assembly	18, 86, 87, 88	x	x	x	x	x	x
59516	Mounting Plate Assembly, Selector	90			x	x		
59519	Crank Selector	17, 18			x	x		
59521	Adjusting Bracket and Stop Nut Assembly	24			x	x		
59522	Adjusting Bracket, Selector Crank	24			x	x		
59537	Pawl Assembly	87, 88, 90	x	x	x	x	x	x
59569	Transfer Switch and Bracket Assembly	26, 86, 87, 88	x	x	x	x	x	x
59569-1	Toggle Spring for Switch 59569	26	x	x	x	x	x	x
59569-2	Over-Center Spring, Stainless Steel	86, 87, 88	x	x	x	x	x	x
59571	Oil Slinger	32	x	x	x	x	x	x
59572	Release Arm, Reversing Switch Plunger	23			x	x		
59573	Casting, Record Holder	83			x	x		
59575	Back Stop Pawl	85	x	x	x	x	x	x
59583	Arm, Trip Switch	31	x	x	x	x	x	x
59584	Spring, Selector Drive Clutch	87, 88, 90	x	x	x	x	x	x
59599	Link and Lever Assembly, Record Lift	19, 86, 87, 88	x	x	x	x	x	x
59601	Record Holder Assembly	23, 83			x	x	x	x
59606	Spring, Record Guide, Retracting	81, 82	x	x	x	x	x	x
59607	Spring, Tone Arm Brush	80	x	x	x	x	x	x
59609	Spring, Selector Shaft Plunger	90			x	x		
59612	Spring, Friction, Drive Gear	87, 88, 90	x	x	x	x	x	x
59613	Spring, Release Arm	90			x	x		

Part No.	Description	Page No.	2400	2400S	2404	2404S	2410	2410S
59614	Spring, Kick-Off	24, 90			x	x		
59615	Spring, Trip Switch	80	x	x	x	x	x	x
59626	Strap and Spring Assembly	87, 88, 90	x	x	x	x	x	x
59631	Upper Cancel Arm, Casting	18	x	x	x	x	x	x
59635	Arm, Record Actuator	23			x	x	x	x
59637	Ball Race	87, 88, 90	x	x	x	x	x	x
59640	Shaft, Cancel Arm	18	x	x	x	x	x	x
59641	Washer, Special	88, 90	x	x	x	x	x	x
59642	Plunger, Motor Reversing Switch	90			x	x		
59647	Washer	88, 90	x	x	x	x	x	x
59654	Ball Bearing	87, 88, 90	x	x	x	x	x	x
59655	Felt Washer	88, 90	x	x	x	x	x	x
59657	Sleeve, Cancel Arm	19, 90			x	x		
59659	Washer, Plunger Shaft	90			x	x		
59661	Cancel Arm Assembly, Lower	18, 19, 86	x	x	x	x	x	x
59666	Selector Shaft Assembly	90			x	x		
59672	Ball Bearing	85	x	x	x	x	x	x
59686	Slide Pin	32	x	x	x	x	x	x
59688	Lever Assembly, Record Clamp	32, 86	x	x	x	x	x	x
59697	Spring, Lift Arm	85	x	x	x	x	x	x
59704	Mounting Bracket and Roller Assembly	20			x	x	x	x
59709	Spring, Carrier Drive	83			x	x		
59710	Spring, Back Stop Pawl	80, 84, 85	x	x	x	x	x	x
59714	Ring, Rubber Gasket	83, 84	x	x	x	x	x	x
59717	Guide Pulley and Bracket Assembly, Tone Arm Brush	31	x	x	x	x	x	x
59721	Arm, Carrier Drive	83			x	x		
59734	Clamp, Record Holder	83, 84	x	x	x	x	x	x
59739	Mounting Bracket, Trip Switch	31	x	x	x	x	x	x
59792	Wire, Tone Arm	80	x		x		x	
59793	Hub and Lever Assembly	85			x	x		
59827	Chassis Mounting Plate	84	x	x	x	x	x	x
59830	Brush, Tone Arm	31, 80	x	x	x	x	x	x
59844	Bracket and Roller Assembly	84, 85	x	x	x	x	x	x
59859	Record Play Counter	83			x	x	x	x
59864	Washer, Turntable Shaft	32, 82	x	x	x	x	x	x
59867	Ball Race, Turntable Shaft	32, 82	x	x	x	x	x	x
59871	Cable, Record Clamp and Tone Arm	32, 82	x	x	x	x	x	x
59888	Cable, Tone Arm Brush	31, 80	x	x	x	x	x	x
59894	Retracting Spring, Lower Coin Stop Arm	9, 70, 85, 87, 88	x	x	x	x	x	x
59901	Spring, Pawl, Record Play Counter	83			x	x	x	x
59922	Record Clamp Arm and Roller Assem.	32, 82	x	x	x	x	x	x
60195	Welding Solution, Dinoc Transfer	95	x	x	x	x	x	x
60518	Latch Switch, Letters	10, 72, 73	x	x	x	x	x	x
60574	Grommet	78	x	x			x	x
60575	Cup Washer	78	x	x			x	x
60599	Stop Plate, Turntable Cam	32	x	x	x	x	x	x
60655	Micro, Switch	80, 89	x	x	x	x	x	x
60658	Mounting Bracket & Roller Assem.	20, 85			x	x	x	x
60677	Spring, Roller Arm	20, 85			x	x	x	x
60680	Pad, Turntable	82	x	x	x	x	x	x
60681	Retaining Ring, Turntable Pilot	82	x	x	x	x	x	x
60711	Guide Tip, Record Lift Arm	23, 85, 87			x	x	x	x
60717	Latch Solenoid, Interlock	7, 8, 70	x	x	x	x	x	x
60717-1	Plunger, Cancel Solenoid	8	x	x	x	x	x	x
60881	"O" Ring, Turntable Drive	81	x	x	x	x	x	x

Part No.	Description	Page No.	2400	2400S	2404	2404S	2410	2410S
60882	Rubber Mount, T.T.Drive Motor	29, 81	x	x	x	x	x	x
60889	Mounting Bracket, Upper, T.T. Drive	29	x	x	x	x	x	x
60893	Spring Clip, Thrust	28, 81	x	x	x	x	x	x
60946	Motor Mounting Plate	28	x	x	x	x	x	x
61059	Spring, Concial, Chassis Mount, Yellow Dot	84	x	x	x	x	x	x
61111	Spring Pin, Stud	29	x	x	x	x	x	x
61173	Spring, Reversing Switch	74			x	x		
61174	Spring, Turntable Cam	32, 82	x	x	x	x	x	x
61484	Guide, Record Lift Arm, R.H.	23, 85, 87			x	x	x	x
61596	Micro Switch, Start and Reverse	13, 25, 26, 74, 75	x	x	x	x		
61658	Stud and Screw Assembly, Tone Arm Cable	32, 82	x	x	x	x	x	x
61672-6	Centering Attachment	17			x	x		
61850	Alignment Plate (Guide)	17, 74, 76			x	x	x	x
61857	Socket, Fustat	35, 78, 79	x	x			x	x
61858	Fustat, 3 Amp.	35, 78, 79	x	x			x	x
62145	Spring, Lock-Out and Pawl	69	x		x	x	x	
62430	Transformer, Out-Put, Hi.Fi.	92	x		x		x	
62496	Terminal Strip, 3 Posts	35, 78	x	x	x	x	x	x
62507	Switch, Fader Control	76	x		x		x	
62670	Coin Bag	92	x	x	x	x	x	x
62742	Tube, 5U4GB	96	x		x		x	
62761	Actuating Arm, Mute and Play Switch	27, 86, 87, 88	x	x	x	x	x	x
62768	Adjustable Cam, Mute and Play Switch	27	x	x	x	x	x	x
62769	Stop Plate, Mute and Play Switch, Arm	27	x	x	x	x	x	x
62773	Spring, Retracting	13, 75, 86, 88	x	x	x	x	x	x
62792	Main Cam and Bushing Assembly	19, 26, 87, 88	x	x	x	x	x	x
62886	Slide Switch	2, 69	x	x	x	x	x	x
63205	Plate, Record Clamp	27, 28, 32	x	x	x	x	x	x
63623	Pivot Pin, Pawl	69	x		x	x	x	
63731	Shim, Metal, Turntable Shaft	32, 82	x	x	x	x	x	x
63732	Washer, Turntable Shaft, Fibre	32, 82	x	x	x	x	x	x
64190	Pulley, Turntable	32	x	x	x	x	x	x
64423	Latch Bracket, Tone Arm	29, 30, 31, 80	x	x	x	x	x	x
64427	Set Screw, Special Allen Head	29, 32, 80	x	x	x	x	x	x
64513	Screw, Turntable Sleeve	82	x	x	x	x	x	x
64520	Sleeve and Bushing Assembly, Turntable	32, 82	x	x	x	x	x	x
64543	Mounting Stud	17			x	x		
64590	Plate and Spacer Assembly	74			x	x		
64601	Contact Assembly Override Switches	74			x	x		
64602	Solenoid, Selector	15, 74, 76			x	x	x	x
64605	Wobble Plate and Override Switch Assembly	74			x	x		
64606	Latch Pin, Selector	18, 24, 74			x	x		
64609	Rotating Plate	74			x	x		
64613	Bushing and Roller Assembly	74			x	x		
64618	Rocker Arm, Short	15, 74, 76			x	x	x	x
64619	Rocker Arm, Long	74			x	x		
64630	Roller and Bracket Assembly	74, 76			x	x	x	x
64637	Pin, Hub, and Arm Assembly, Rotating Plate	74			x	x		
64645	Mounting Plate and Stop Magnet Assembly	16, 74			x	x		
64649	Stop Pivot, Selector	76					x	x
64650	Magnet and Frame Assembly, R. H. (B)	74			x	x		
64651	Magnet and Frame Assembly L. H. (C)	74, 76			x	x	x	x
64653	Stop Arm (C) R.H.	16			x	x		
64654	Stop Arm (B) L.H.	16			x	x		
64711	Timing Relay No. 2	74			x	x		
64722	Driver Solenoid	16, 74			x	x		
64773	Spring, Stop Arm	74, 76			x	x	x	x

Part No.	Description	Page No.	2400	2400S	2404	2404S	2410	2410S
64781	Retracting Spring, Rotating Plate	16, 74			x	x		
64783	Spring and Plug Assembly Driver Solenoid	74			x	x	x	x
64784	Spring, Driver Solenoid	76			x	x	x	x
64857	Switch, Tone Control	93	x	x	x	x	x	x
64858	Tube, 6AU6	92	x		x		x	
64883	Catch and Spring Assembly, Coin Register	2	x		x	x	x	
64914	Tube, 6AN8	92	x		x		x	
64920	Socket, 9 Prong	93	x	x	x	x	x	x
64981	Series Switch Assembly	10, 71, 72, 73	x	x	x	x	x	x
64982	Series Switch, Letters	10, 71, 72, 73	x	x	x	x	x	x
64996	Volume Control, Dual	92	x		x		x	
65007	Latch Solenoid Switch	12, 71			x	x		
65009	Pawl, Stud, and Spacer Assembly							
	Letters	11, 12, 71, 72, 73	x	x	x	x	x	x
65010	Trip Lever and Spacer Assembly	12, 71, 72, 73	x	x	x	x	x	x
65069	Cancel Solenoid	69	x		x	x	x	
65096	Spring, Turntable Release Lever	80, 82	x	x	x	x	x	x
65170	Mute and Play Switch and Bracket Assembly	86, 87, 88	x	x	x	x	x	x
65170-1	Toggle Spring, Mute and Play Switch	87, 88	x	x	x	x	x	x
65170-A	Fiber, Mute and Play Switch	87	x	x	x	x	x	x
65192	Speaker, 12" R. H.	39, 96	x	x	x	x	x	x
65203	Gear and Shaft Assembly, Turntable							
	Drive Motor	28, 81	x	x	x	x	x	x
65273	Balancing Weight and Bracket Assembly	30	x	x	x	x	x	x
65362	Taper Pin	71, 72, 73	x	x	x	x	x	x
65462	Plug and Wire Assembly, Shorting	92	x		x		x	
65487	Record Lift Arm	20	x	x				
65526	Stop, Guide Tip	20, 88	x	x				
65548	Connector Bracket, Carrier	84	x	x				
65625	Motor, Record Changer	31	x	x	x	x	x	x
65730	Guide Tip, R. H.	20, 88	x	x				
65731	Guide Tip, L. H.	20, 88	x	x				
65770	Coin Magnet (Coil Assembly)	4	x		x	x	x	
65801	Cover, Plastic, Stepper	79	x	x				
65809	Spring, Selector Crank	86, 87, 89	x	x	x	x	x	x
65812	Spring, Guide Tips	20, 88	x	x				
65885	Bracket and Roller Assembly, L. H.	84	x	x				
65886	Bracket and Roller Assembly, R. H.	84	x	x				
65908	Record Holder Assembly	84	x	x				
65937	Washer, Lift Arm Guide Tip	20	x	x				
65938	Shaft, Guide Tips	20	x	x				
65939	Roller, Record Lift Arm Guide	84	x	x				
65940	Strap, Lift Arm Guide	19	x	x				
65942	Spacer, Lift Arm Guide	19	x	x				
65947	Pin, Solenoid Shaft	10, 69, 71, 72, 73	x	x	x	x	x	x
65952	Switch, Over-ride	13, 14, 75	x	x				
65958	Spring, Record Lift Arm, Centering Bracket	21	x	x				
65985	Stud, Fixed	21	x	x				
65986	Stud, Eccentric	21	x	x				
65989	Roller, Lift Arm Guide	20	x	x				
66007	Switch and Bracket Assembly, Series, Numbers	12	x	x	x	x	x	x
66039	Front Plate, Coin Mechanism Playrak	2	x		x	x	x	
66045	Driver Pin, Cancel Wheel	4	x		x	x	x	
66049	Mounting Stud, Lock-out Lever	69	x		x	x	x	
66069	Stop Bracket, Cancel Pawl	6	x		x	x	x	
66071	Spring, Cancel	69	x		x	x	x	
66072	Spring	69	x		x	x	x	

Part No.	Description	Page No.	2400	2400S	2404	2404S	2410	2410S
66074	Spring, Accumulator Wheel	69	x		x	x	x	
66082	Switch Assembly, Key	69	x		x	x	x	
66124	Cancel Wheel	69	x		x	x	x	
66125	Pivot, Arm and Pawl Assembly	6, 69	x		x	x	x	
66126	Pivot Arm Assembly	5	x		x	x	x	
66127	Pin and Pawl Assembly	6	x		x	x	x	
66128	Coin Magnet and Bracket Assembly	69	x		x	x	x	
66129	Lever, Hub and Stud Assembly	4, 69	x		x	x	x	
66130	Lock-out Lever and Hub Assembly	5	x		x	x	x	
66131	Accumulator Wheel	4, 5, 69	x		x	x	x	
66132	Stop Lever and Spring Assembly	2, 5, 69	x		x	x	x	
66133	Indexing Strip, Quarter	5, 69	x		x	x	x	
66135	Indexing Strip, Dime - Half-Dollar	5, 69	x		x	x	x	
66182	Plate, Adjusting, Lift Arm Guide	19	x	x				
66186	Contact Plate Assembly	13, 15, 75, 76	x	x			x	x
66241	Socket and Wire Assembly	10, 11, 71, 72, 73	x	x	x	x	x	x
66378	Stud, Shock Mount	93	x	x	x	x	x	x
66393	Guard, Cancel Pawl	5	x		x	x	x	
66445	Pin, Hinge	2	x		x	x	x	
66580	Oil Guard	88, 90	x	x	x	x	x	x
67439	Lamp, Mazda No. 55	79	x	x				
67464	Line Cord Assembly	92, 93	x	x	x	x	x	x
67920	Rotating Plate, Selector	75	x	x				
67926	Rocker, Rotating Plate	13, 75	x	x				
67927	Wobble Ring	13, 14	x	x				
67928	Support Casting, R. H.	88	x	x				
68033	Turntable	28	x	x	x	x	x	x
68102	Turntable and Shaft Assembly	32, 82	x	x	x	x	x	x
68192	Coin Return Cup Casting	95	x	x	x	x	x	x
68247	Switch and Bracket Assembly, Latch	12			x	x		
68290	Guide Plate, Record Lift Arm	19, 20, 88	x	x				
68311	Coin Switch Assembly	69	x		x	x	x	
68375	Record Guide and Bracket Assembly, L.H.	81	x	x	x	x	x	x
68376	Record Guide and Bracket Assembly, R.H.	81	x	x	x	x	x	x
68483	Sleeve and Bushing Assembly	18, 25, 89	x	x				
68521	Tapping Plate	88	x	x				
68545	Pin and Actuator Assembly	2, 3	x		x	x	x	
68552	Lower Coin Chute Assembly	2, 3, 7, 70	x	x	x	x	x	x
68582	Contact Plate Assembly	89	x	x				
68594	Solenoid, Letters	75	x	x				
68601	Switch Assembly, Latch	71			x	x		
68617	Number Solenoid (2 to 0)	13, 75	x	x				
68649	Shoulder Screw, Selector	13	x	x				
68650	Spacer, Wobble Ring	13, 14, 75	x	x				
68651	Bracket and Roller Assembly	75	x	x				
68656	Plastic Roller, Rotating Plate	75	x	x				
68657	Stud, Guide Roller	13, 75	x	x				
68700	Support Casting, L.H.	88	x	x				
68717	Gear and Hub Assembly, Selector Motor	13, 75	x	x				
68755	Spring, Rotating Plate and Rocker Assembly	75	x	x				
68757	Guide Bracket, L.H., Selector Support	16	x	x				
68758	Guide Bracket, R.H., Selector Support	16	x	x				
68759	Guide Bracket, L.H., Selector Casting	16	x	x				
68760	Guide Bracket, R.H., Selector Casting	16	x	x				
68770	Switch, Cancel	92, 93	x	x	x	x	x	x
68771	Bracket and Resistor Assembly	92	x		x		x	
68774	Spring, Retracting	25, 89	x	x			x	x

Part No.	Description	Page No.	2400	2400S	2404	2404S	2410	2410S
68799	Silk Screen and Support Plate Assembly	13	x	x				
68804	Solenoid, Selector, No. 1	13,75	x	x				
68940	Relay, Letter Pulse	35,78,79	x	x			x	x
68941	Relay, Timing, Letter Unit	79	x	x				
68942	Timing Relay, No. 2	79	x	x				
68943	Timing Relay, No. 3	79	x	x				
69066	Mounting Bracket and Motor Assembly	31	x	x	x	x	x	x
69067	Motor, Record Changer	84,85	x	x	x	x	x	x
69089	Plug, 4 Prong, Tone Arm	80		x		x		x
69090	Socket, 4 Prong, (Stereo)	82		x		x		x
69104	Spring, Back Door Lock	96	x	x	x	x	x	x
69240	Relay, Reversing	76,79	x	x			x	x
69244	Relay, Pulse	69	x		x	x	x	
69247	Centering Shaft, Selector Shaft	16	x	x			x	x
69492	Lower Plate and Spacer Assembly	14	x	x				
69569	Socket, Center	95	x	x	x	x	x	x
69659	Shoulder Stud, Eccentric, Guide Roller	13,75	x	x				
70897	Resistor, 1650 ohm, 15 W; 9000 ohm, 10 W	92	x		x		x	
70901	Capacitor 65 to 93 mfd., 50 V	79	x	x				
71217-14	Capacitor, .01 mfd., 400 V.	78	x	x	x	x	x	x
71218-12	Capacitor, .015 mfd., 200 V	70	x	x			x	x
71220-24	Capacitor, .022 mfd., 400 V.	76	x	x	x	x	x	x
71224-12	Capacitor, .047 mfd., 200 V	70	x	x	x	x	x	x
71499	Capacitor, .250 mfd., 50 V	35,76,78,79	x	x			x	x
71587-5	Tinnerman Nut	95	x	x	x	x	x	x
71588-1	Rectifier, Silicon Diode, Brown	40,91		x		x		x
71588-2	Rectifier, Silicon Diode, Green	40,91		x		x		x
71588-3	Rectifier, Silicon Diode, Red	40,91		x		x		x
71590-22	Fuse, 3 Amp	40,91		x		x		x
71590-33	Fuse, 8 Amp	40,91	x	x	x	x	x	x
71590-48	Fuse, 15 Amp	93	x	x	x	x	x	x
71591-3	Fusetron, 0.3 Amp	79	x	x				
71591-10	Fuse, Slo Blo, .8 Amp	69,76,79	x	x	x	x	x	x
71591-15	Fuse, Slo Blo, 1.6 Amp	40,91		x		x		x
71591-19	Fuse, Slo Blo, 2 Amp	40,91	x	x	x	x	x	x
71594	Capacitor, 20 mfd., 250 W.V.	40,91	x	x		x		x
71595	Capacitor, 100 mfd., 250 W.V.	40,91	x	x		x		x
71596-114	Rivet	97,99	x	x	x	x	x	x
71596-116	Rivet	97,98	x	x	x	x	x	x
71596-118	Rivet, Aluminum, Semi-Tubular	98,99	x	x	x	x	x	x
71883-2	Resistor, 150 ohm, 5W.	10,35,71,72,73,78	x	x	x	x	x	x
71885-2	Resistor, 120 ohms, 5 W	74			x	x		
71886-3	Resistor, 85 ohms, 5W	10,71,72,73	x	x	x	x	x	x
72200-32	Resistor, 2200 ohm, 1/2 W	76,79	x	x			x	x
72290-32	Resistor, 12 ohm, 1W	70		x				x
72298-32	Resistor, 27 ohms, 1 W	79	x	x				
72312-32	Resistor, 100 ohm, 1 W	70		x				x
72314-32	Resistor, 120 ohm, 1 W	79	x	x				
72449-31	Resistor, 50 ohm, 2 W.	79	x	x				
72464-32	Resistor, 220 ohm, 2 W	79	x	x				
72474-32	Resistor, 560 ohms, 2 W	35,78,79	x	x			x	x
72478-32	Resistor, 820 ohms, 2 W	79	x	x				
72935-2	Resistor, 125 ohms, 10 W	76,79	x	x			x	x
72986-2	Resistor, 50 ohms, 5 W	35,74,76,78	x	x	x	x	x	x
72999-2	Resistor, 310 ohms, 5 W.	76					x	x
73093-24	Capacitor, .1 mfd., 400 V.	79	x	x				
73093-142	Capacitor	76					x	x

Part No.	Description	Page No.	2400	2400S	2404	2404S	2410	2410S
73099-240	Capacitor, 0.5 mfd., 400 V	35, 78, 79	x	x			x	x
73474	Capacitor, Electrolytic, 20, 20, 10, 20, Mfd., 400, 400, 400, 50 W.V.	92	x		x		x	
73475	Capacitor, Electrolytic, 30, 20, 20, 25, Mfd., 500, 400, 400, 50 W.V.	92, 93	x	x	x	x	x	x
73476-2	Resistor, 8 Ohms, 10W	40		x		x		x
73476-2	Resistor, 8 Ohms, 10W	76, 91		x		x		x
73479-2	Resistor, 1.5 Ohm, 10W	40		x		x		x
73479-2	Resistor, 1.5 Ohm, 10W	91		x		x		x
73502-95	Screw, 10-32 x 1", R.H.	23, 24, 25, 26	x	x	x	x		
73502-97	Screw, 10-32 x 1-1/4", R.H.	24			x	x		
73502-99	Screw, 10-32 x 1-3/4", R.H.	32	x	x	x	x	x	x
73503-23	Screw, 4-40 x 1/4" Cartridge Mount	82	x	x	x	x	x	x
73503-25	Screw, 4-40 x 3/8", Machine, R.H. Phillips	83, 84	x	x	x	x	x	x
73503-72	Screw, 6-32 x 3/4" R.H.	25					x	x
73503-73	Adjusting Screw, 6-32 x 7/8" R.H.	26			x	x		
73503-91	Screw, 8-32 x 3/4" R.H.	20, 25	x	x	x	x	x	x
73503-93	Screw, 8-32 x 1" R.H.	25					x	x
73503-95	Screw, 8-32 x 1-1/4" R.H.	25	x	x	x	x	x	x
73513-19	Screw, Socket Head, 6-32 x 3/16"	29, 81	x	x	x	x	x	x
73531-1	Screw, #4 x 1/4" Type "L"	2	x		x		x	
73533-1	Screw, 4-40 x 3/16", Adjusting, Index Strip	5, 83, 84	x	x	x	x	x	x
73533-3	Screw, 4-40 x 5/16" Sems R.H.	21, 81	x	x	x	x	x	x
73533-7	Screw, 4-40 x 5/8" R.H.	19, 88	x	x				
73533-21	Screw, 6-32 x 3/16" R.H., Adjusting	6	x		x	x	x	
73533-22	Screw, 6-32 x 1/4" R.H.	4, 5, 8, 27, 28	x	x	x	x	x	x
73533-33	Screw, 8-32 x 3/16" Sems R.H.	14					x	x
73533-34	Screw, 8-32 x 1/4" R.H. Sems.	7, 9, 10, 19, 27	x	x	x	x	x	x
73533-38	Screw, 8-32 x 1/2" R.H.	29, 32	x	x	x	x	x	x
73533-40	Screw, 8-32 x 3/4" R.H.	17			x			
73533-44	Sems. Screw R.H. 8-32 x 1-1/4"	10	x	x				
73533-105	Screw, 3-48 x 7/16" R.H.	88	x	x				
73534-14	Screw, Adjustable Cam	27	x	x	x	x	x	x
73551-23	Screw, Thread Cutting, R.H.	3		x				x
73568-106	Adjusting Screw, 10-32 x 5/16" R.H. Thread Cutting	20			x	x	x	x
73571-187	Screw, 6-32 x 1" Socket Head	8		x				x
73574-31	Adjusting Screw 4-40 x 1" R.H.	26, 27	x	x	x	x	x	x
73575-100	Adjusting Screw, 10-32 x 2" R.H.	30	x	x	x	x	x	x
73586-2	Screw, 2-56 x 3/16"	85, 87			x	x	x	x
73592-21	Screw, 5/8" x 8 R.H. P.K. Type A	3		x				x
73601-6	Nut, 6-32 Hex	20	x	x				
73601-7	Nut, 8-32 Hex	29	x	x	x	x	x	x
73601-10	Nut, 1/4 - 20 Hex	27, 28, 32	x	x	x	x	x	x
73605-5	Lockwasher, #6	20	x	x				
73606-1	Lock Washer #2, Countersunk	85, 87			x	x	x	x
73607-12	Lock Washer 1/2" Internal	32	x	x	x	x	x	x
73637-10	Nut, Tinnerman	83, 84	x	x	x	x	x	x
73658-8	Speed Nut, Tinnerman	98	x	x	x	x	x	x
73660-161	Adjusting Screw, Hex Head, 10-32 x 1-1/4"	19, 21	x	x	x	x	x	x
73676-46	Screw, 10-32 x 1/4" R.H.	23	x	x	x	x	x	x
73676-47	Adjusting Screw, 10-32 x 5/16" R.H.	20			x	x	x	x
73692-49	Screw, 10-32 x 7/16" Sems	14					x	x
73724-9	Retaining Ring No. 9	20	x	x				
73724-15	Retaining Ring No. 15	10, 69, 71, 72, 73, 74	x	x	x	x	x	x
73724-18	Retaining Ring No. 18	10, 69, 71, 72, 73, 74, 93	x	x	x	x	x	x
73724-21	Retaining Ring No. 21	69	x		x		x	

Part No.	Description	Page No.	2400	2400S	2404	2404S	2410	2410S
73724-25	Retaining Ring	10, 19, 29, 69, 81	x	x	x	x	x	x
73724-31	Retaining Ring	75	x	x				
73724-50	Retaining Ring	76					x	x
73724-87	Retaining Ring	83, 88, 90	x	x	x	x	x	x
73727-112	Retaining Ring	88, 90	x	x	x	x	x	x
73728-50	Retaining Ring	18	x	x	x	x	x	x
73782-11	Roll Pin	81	x	x	x	x	x	x
73782-32	Roll Pin	19, 75, 88	x	x				
73782-48	Roll Pin	84	x	x	x	x	x	x
73782-88	Roll Pin	88, 90	x	x	x	x	x	x
73783-37	Tru Arc Retaining Ring, Internal	90			x	x		
73785	Lock Nut 10-32 Hex Special	19	x	x	x	x	x	x
73787-69	Screw, 6-32 x 7/16" Truss Head	81	x	x	x	x	x	x
73787-85	Screw, 8-32 x 1/4" Truss Head	80			x	x		x
73787-86	Screw, 8-32 x 5/16"	81		x		x		x
73787-87	Screw, 8-32 x 3/8" Truss Head	96	x	x	x	x	x	x
73790-139	Cap Screw, Hex Hd. 8-32 x1-3/8"	18			x	x		
73793-86	Adjusting Screw, Trip Switch	31	x	x	x	x	x	x
73793-87	Screw 8-32 x 7/8" Hex Hd.	14, 76					x	x
73793-88	Screw, 8-32 x 1" Hex Hd.	13	x	x				
73793-118	Cap Screw, 10-32 x 1/2"	31	x	x	x	x	x	x
73793-122	Screw, 10-32 x 1" Hex Hd.	13	x	x				
73793-124	Cap Screw, Hex Hd.	17	x	x				
73793-125	Cap Screw, 10-32 x 1-3/4"	18, 25	x	x	x	x	x	x
73793-150	Cap Screw, Hex Hd. 1/4"-20 x 1"	17			x	x	x	x
73793-151	Screw, 1/4-20 x 1-1/4" Hex Hd	88	x	x				
73804-7	Cable Clip No. 7	80	x	x	x	x	x	x
73834-4	Tinnerman Nut 1/8" Stud	95	x	x	x	x	x	x
73862	Capacitor, Electrolytic, Tubular, 100 mfd. 50 V.	35, 78	x	x			x	x
73864	Capacitor, 20 mfd., 50 V		x	x				
73865-8	Nut, 1-32	30, 80	x	x	x	x	x	x
73889-620	Capacitor, 150 mfd., 50 W.V.	74			x	x		
74150	Capacitor, Electrolytic, 20-20-150 450 V-450V-50V.	93		x		x		x
110004	Bracket, Guide, Lift Arm Linkage	86	x	x	x	x	x	x
110048	Elastic Compound	80	x	x	x	x	x	x
110077	Washer	88, 90	x	x	x	x	x	x
110190	Cable Assembly, Input (Stereo)	39, 82	x	x	x	x	x	x
110453	Lamp Socket Assembly	79	x	x				
110480	Spring, Latch Pin	14, 17, 25, 75, 89	x	x				
110557	Switch, Carriage	25	x	x			x	x
110558	Switch, Reversing (2 used)	13, 25	x	x			x	x
110680	Caster.	95	x	x	x	x	x	x
110928	Link, Selector Crank, Actuator Arm	25	x	x				
110930	Tip and Mounting Bracket Assembly, Outer	17, 18, 89	x	x				
110934	Spring, Cancel Lever	18, 86, 87, 88	x	x	x	x	x	x
110936	Tip and Mounting Bracket Assembly, Inner	25, 89	x	x				
110937	Switch Lever and Stop Nut Assembly.	25, 89	x	x				
110939	Actuator Arm and Link Assembly	18, 25, 89	x	x				
110941	Latch Pin, Inner	14, 25, 26, 75	x	x				
110942	Latch Pin, Outer	14, 17, 26, 75	x	x				
110943	Selector Crank and Stop Nut Assembly	18, 89	x	x				
110949	Mounting Plate and Stop Nut Assembly	89	x	x				
110952	Selector Shaft and Adjustment Plate Assembly.	25	x	x				
110965	Lamp, 25W. Fluorescent	96	x	x	x	x	x	x
110982	Slug Rejector Assembly	2	x		x	x	x	

Part No.	Description	Page No.	2400	2400S	2404	2404S	2410	2410S
110996	Light Ballast Assembly	96	x	x	x	x	x	x
111044	Plate, Record Guide	22	x		x		x	
111125	Slide Lock, Slug Rejector	2, 3, 7, 70	x	x	x	x	x	x
111481	Rotating Plate and Rocker Assembly	13	x	x				
111494	Pulse Relay, Junction Box, Stepper	79	x	x				
111526	Housing, Male, 3 Circuit	13, 75	x	x				
111527	Contact for Connector Housing	14, 29, 75	x	x	x		x	
111528	Housing, Female, 3 Circuit	13, 14, 75	x	x				
111720	Crank and Link Assembly, Latch Linkage	10, 11, 71, 72, 73	x	x	x	x	x	x
111810	Switch and Bracket Assembly, Letter Series	12	x	x	x	x	x	x
111816	Lamp, 2 Prong, G12	72, 73		x				x
111817	Socket, 2 Prong, for G12 Lamp (4 used)	72, 73		x				x
111897	Shaft, Link and Lever Assembly, Letters	10, 11, 72	x	x	x	x	x	x
111898	Shaft, Link and Lever Assembly, Numbers	10, 11, 71	x	x	x	x	x	x
111913	Motor and Gear Assembly, Selector	13, 75	x	x				
112104	Solenoid Assembly, Latch	10, 71, 72, 73	x	x	x	x	x	x
112104-1	Plunger, Latch Solenoid	12, 71, 72, 73	x	x	x	x	x	x
112231	Tone Control, Treble, Printed Circuit	93	x	x	x	x	x	x
112417	Adjusting Clip, Selector Switch, Letter	11, 71, 72			x		x	x
112494	Relay, Timing No. 1	69	x	x	x	x	x	x
112631	Transformer, Amplifier	92	x		x		x	
112632	Transformer, Low Voltage	92	x		x		x	
113153	Amplifier, Mod. 536 (less tubes)	37	x		x		x	
113187	Segment, Record Indicator Ring, A17, D10	83			x	x		
113188	Segment, Record Indicator Ring, A18, B23	83			x	x		
113189	Segment, Record Indicator Ring, C4-D9	83			x	x		
113190	Segment, Record Indicator Ring, B24-C3	83			x	x		
113194	Segment, and Silk Screen Assembly N6-T5	84	x	x				
113195	Segment, and Silk Screen Assembly H6-N5	84	x	x				
113196	Segment, and Silk Screen Assembly C6-H5	84	x	x				
113197	Segment, and Silk Screen Assembly T6-C5	84	x	x				
113199	Support Casting and Bushing Assembly	80	x	x	x	x	x	x
113202	Spacer Stud, Record Carrier	83, 84	x	x	x	x	x	x
113204	Pivot Casting and Arm Assembly	88	x	x				
113205	Bracket and Stop Nut Assembly, L. H.	20, 88	x	x				
113210	Reset Lever Assembly, Play Meter	84	x	x				
113215	Pivot Casting and Arm Assembly	85, 87			x	x	x	x
113216	Bracket and Nut Assembly	85, 87			x	x	x	x
113229	Coin Chute Lower - Coin Casting	9		x				x
113249	Switch, Reset	10, 11, 71, 72, 73	x	x	x	x	x	x
113291	Lock and Key, Coin Box	95	x	x	x	x	x	x
113299	Actuating Arm, Transfer Switch	31, 86	x	x	x	x	x	x
113314	Stud, Reject Lever	96	x	x	x	x	x	x
113320	Tone Arm and Wire Assembly, Stereo	80		x		x		x
113325	Connector, Sonotone Cartridge	80		x		x		x
113327	Reject Button	95	x	x	x	x	x	x
113350	Slug Rejector	70		x				x
113387	Connecting Bracket, Carrier Ring	83					x	x
113408	Carrier Ring and Silk Screen Assembly A1-C4	83					x	x
113409	Carrier Ring and Silk Screen Assembly E0-C6	83					x	x
113410	Carrier Ring and Silk Screen Assembly H5-F1	83					x	x
113411	Carrier Ring and Silk Screen Assembly K0-H6	83					x	x
113420	Receptacle, Dual, Single Prong	92, 93	x	x	x	x	x	x
113427	Coin Stop Arm, Upper	7, 9, 10, 70		x				x
113454	Gimbal and Stop Nut Assembly	80	x	x	x	x	x	x
113527	Cap, 6 Circuit	7, 29, 70, 81	x	x	x	x	x	x

Part No.	Description	Page No.	2400	2400S	2404	2404S	2410	2410S
113528	Socket, 6 circuit	7, 70, 81	x	x	x	x	x	x
113529	Cap, 9 Circuit	3, 7, 70		x				x
113530	Socket, 9 Circuit	3, 7, 70		x				x
113566	Contact Spring, L.H.	8, 10		x				x
113571	Washer	70		x				x
113585	Pin, Coin Stop	9		x				x
113627	Switch, Full Cycle	7, 10		x				x
113651	Card Holder	96	x	x	x	x	x	x
113654	Glass, Card Holder	96	x	x	x	x	x	x
113697	Spring Clamp, Program Holder (4)	97, 98			x	x	x	x
113699	Clamp, Program Holder	98, 99	x	x	x	x	x	x
113700	Spring	97, 99	x	x	x	x		
113716	Spring, Upper Program Holder	98					x	x
113717	Segment, Record Indicator Ring, B1-J7	83					x	x
113718	Segment, Record Indicator Ring, J8-G4	83					x	x
113719	Segment, Record Indicator Ring, G1-D7	83					x	x
113720	Segment, Record Indicator Ring, D8-B4	83					x	x
113789	Contact, #20 to #15 Wire	81	x	x	x	x	x	x
113818	Classification Strip "Wurlitzer Music"	97	x	x	x	x	x	x
113819	Classification Strip "Today's Top Tunes"	97	x	x	x	x	x	x
113820	Classification Strip "Country and Western"	97	x	x	x	x	x	x
113821	Classification Strip "Rhythm and Blues"	97	x	x	x	x	x	x
113822	Classification Slip "Rock and Roll"	97	x	x	x	x	x	x
113823	Classification Slip "New Pop Records"	97	x	x	x	x	x	x
113824	Classification Slip "E. P. Show Albums"	97	x	x	x	x	x	x
113826	Classification Slip "Classical and Old Favorites"	97	x	x	x	x	x	x
113827	Classification Slip "Jazz and Novelty"	97	x	x	x	x	x	x
113828	Classification Slip"Polkas and Waltzes"	97	x	x	x	x	x	x
113849	Service Card	96	x	x	x	x	x	x
113854	Lever and Bracket Assembly	2	x	x	x	x	x	x
113854	Lever and Bracket Assembly, Reject Arm	3	x	x	x	x	x	x
113906	Torsion Spring, Reject Rod	96	x	x	x	x	x	x
113909	Printed Board, Pricing Strip	3, 7, 70		x				x
113916	Contact Spring, Accumulator	10		x				x
113927	Coin Stop Arm and Bracket Assembly, Lower	7, 9, 10		x				x
113936	Switch, Dual Fader	93		x		x		x
113945	Escapement Pawl Assembly	8		x				x
113957	Relay, Timing No. 1	70		x				x
113958	Reinforcing Bracket, R.H.	97, 98, 99	x	x	x	x	x	x
113959	Reinforcing Bracket, L.H.	97, 98, 99	x	x	x	x	x	x
113960	Printed Board, Credit Lights	7, 70		x				x
113961	Coin Casting and Support Assembly	3, 7		x				x
113980	Drive Arm and Contact Assembly	7, 10, 70		x				x
113983	Adjusting Screw and Bearing Assembly	10		x				x
113984	Motor and Pin Assembly	7, 70		x				x
113991	Arm and Contact Assembly, Credit Lights	7		x				x
113992	Ratchet Wheel and Contact Assembly	7, 8, 70		x				x
113997	Pricing Plate, Shorting	10, 73		x				x
113999	Spring, Cancel Pawl	8, 70		x				x
114000	Spring, Coin Block Arm	10, 70		x				x
114003	Spring, Ratchet Wheel	8, 70		x				x
114006	Speaker, 12", L.H.	39, 96	x	x	x	x	x	x
114026	Coin Stop, Coin Chute	95	x		x		x	
114029	Coin Paddles, Coin Switch	7, 70		x				x
114032	Cancel Pawl and Lever Assembly	8, 70		x				x
114033	Edge Receptacle	10, 73		x				x
114037	Accumulator Assembly	3, 7, 70		x				x

Part No.	Description	Page No.	2400	2400S	2404	2404S	2410	2410S
114038	Coin Stop Arm and Switch Assembly	70		x				x
114046	7025 Tube	93		x		x		x
114048	6973 Tube	93		x		x		x
114054	Speaker, 7"	39, 96	x	x	x	x	x	x
114058	Cover, 7" Speaker	39, 96	x	x	x	x	x	x
114060	Carrier Ring and Silk Screen Assembly, A1-A8	83			x	x		
114061	Carrier Ring and Silk Screen Assembly, B7-B14	83			x	x		
114062	Carrier Ring and Silk Screen Assembly, C13-C20	83			x	x		
114063	Carrier Ring and Silk Screen Assembly, D19-D26	83			x	x		
114064	Carrier Ring, F2-L1	84	x	x				
114065	Carrier Ring, R2-A1	84	x	x				
114066	Carrier Ring, L2-R1	84	x	x				
114067	Carrier Ring, A2-F1	84	x	x				
114087	Casting, Front, Record Guide	81	x	x	x	x	x	x
114092	Selector Switch, Numbers	72					x	x
114093	Selector Switch Assembly, Letters	72						x
114094	Mounting Plate and Weld Screw Assembly	96	x	x	x	x	x	x
114259	Transformer, Audio Out-Put	93		x		x		x
114264	Dual Volume Control	93		x		x		x
114323	Wire and Plug Assembly, Tone Arm	80		x		x		x
114324	Plug, 12 Prong, Amphenol	40, 69, 71, 72, 73, 91	x	x	x	x	x	x
114325	Socket, 12 Prong	74, 76, 79, 93	x	x	x	x	x	x
114336	Switch, Latch Solenoid	10, 72, 73		x				x
114346	Dual Stepper	79	x	x				
114346A	Relay, Latch	35, 78, 79	x	x			x	x
114346B	Step Magnet, Letters	35, 78, 79	x	x			x	x
114346C	Nylon Ratchet Wheel, Numbers	35, 78, 79	x	x			x	x
114346D	Nylon Ratchet Wheel, Letters	35, 78, 79	x	x			x	x
114346E	Contact Plate Assembly, Numbers	35, 79	x	x				
114346F	Contact Plate Assembly, Letters	35, 79	x	x				
114346G	Contact Arm, Numbers and Letters	35, 79	x	x				
114346H	Contact Arm, Letters and Numbers	35, 79	x	x				
114412	Mounting Bracket and Terminal Strip	93		x		x		x
114430	Spring, Escapement Pawl	8, 70		x				x
114463	Potentiometer, Balance Control	93		x		x		x
114479	Stop, Cancel Pawl	8, 70		x				x
114484	Spring, Tone Arm Pressure	80	x	x	x	x	x	x
114489	Plug and Wire Assembly, Stereo	93		x		x		x
114501	Relay, Transfer	79	x	x				
114505	Relay, Number Pulse	79	x	x				
114507	Overlay, Record Guide, Stereo	81		x		x		x
114508	Plate, Record Guide, Stereo	81		x		x		x
114527	Knob, A Channel, Red	93		x		x		x
114528E	Contact Plate Assembly	78					x	x
114528F	Contact Plate Assembly	78					x	x
114528G	Contact Arm Assembly	78					x	x
114528H	Contact Arm	78					x	x
114643	Cover and Liner Assembly, Pricing Unit	3		x				x
114888	Gasket, Light Diffuser	96	x	x	x	x	x	x
114889	Relay, Pricing	3, 7		x				x
114928	Relay, Anti Cheat	3, 7, 70		x				x
114929	Relay, TR1	3, 7		x				x
114949	Relay, Pulse	3, 7, 70		x				x
115023	Drive Pulley	28, 81	x	x	x	x	x	x
115043	Centering Shaft Assembly	96	x	x			x	x
115054	Torsion Spring, Program Holder	98, 99	x	x	x	x	x	x
115056	Spring Plate, Program Holder	98, 99	x	x	x	x	x	x

Part No.	Description	Page No.	2400	2400S	2404	2404S	2410	2410S
115058	Motor, Turntable	28	x	x	x	x	x	x
115109	Rubber Bumper	97,99	x	x	x	x	x	x
115143	Actuator, Reversing Switch	90			x	x		
115206	Worm Gear	28,81	x	x	x	x	x	x
115411	Stop Pin, Rotating Plate	13,75	x	x				
115660	Stop Pin Assembly, T.A. Feed-in Adjust	29,30,31,80	x	x	x	x	x	x
115668	Arm and Rivet Assembly Selector Shaft	87,88	x	x	x	x	x	x
115669	Selector Shaft and Adjusting Plate Assembly	25,89	x	x				
115684	Casting, Record Carrier	84	x	x				
115750	Casting, Record Carrier	83					x	x
115752	Selector Shaft Assembly	89					x	x
115761	Mounting Plate and Bushing Assembly	89					x	x
115765	Switch Lever and Stop Nut Assembly	89					x	x
115767	Actuator Arm and Link Assembly	89					x	x
115769	Contact Plate Assembly	89					x	x
115770	Selector Crank and Bracket Assembly	89					x	x
115772	Sleeve and Bushing Assembly	89					x	x
115787	Rotating Plate	76					x	x
115788	Rocker, Long	15,76					x	x
115789	Stop Bracket, Selector	76					x	x
115796	Wobble Plate, Selector	15,76					x	x
115798	Adjustment Bracket, Hub and Stop Nut Assembly	76					x	x
115804	Centering Yoke and Hub Assembly	76					x	x
115806	Latch Pin, Selector, Inner	15,76					x	x
115807	Latch Pin, Selector, Outer	15,76					x	x
115812	Centering Shaft and Plate Assembly	14					x	x
115821	Spring, Centering Yoke	76					x	x
115822	Guide Plate, Centering Yoke	76					x	x
115823	Guide, Centering Yoke	76					x	x
115824	Stop, Centering Yoke	14,76					x	x
115825	Fall Support Assembly	78					x	x
115829	Pivot Bracket Assembly, Fall Support	35					x	x
115831	Spacer	78					x	x
115832	Spring and Clip Assembly	35,78					x	x
115835	Hinge Bracket	35					x	x
115837	Latch Bar, Junction Box	76					x	x
115848	Electric Selector	75	x	x				
115851	Coin Register Mechanism Playrak	2	x		x	x	x	
115856	Chassis Frame Casting and Plate Assembly	87					x	x
115862	Stop Arm and Rivet Assembly	14,76					x	x
115866	Plastic Cap, Fader Switch	92,93	x	x	x	x	x	x
115874	Casting, Chassis Frame and Shaft Assembly	86			x	x		
115879	Mounting Plate and Magnet Assembly	76					x	x
115884	Relay, Transfer	35,78					x	x
115889	Relay, Number Timing	35,78					x	x
115900	Relay, Indexing	76					x	x
115909	Plate and Spacer Assembly	76					x	x
115914	Contact Assembly, Electric Selector	14,76					x	x
115915	Mounting Casting Assembly, Electric Selector	13,15	x	x				
115918	Contact Assembly, Electric Selector	15,76					x	x
115973	Spring, Selector	76					x	x
115974	Cable and Plug Assembly, Dual Price	3		x				x
115975	Solenoid, Driver	76					x	x
116023	Chassis Frame and Shaft Assembly	88	x	x				
116050	Dual Stepper Switch Assembly	78					x	x
116069	Shaft, Tone Arm Brush	80	x	x	x	x	x	x
116070	Shaft and Hub Assembly, Tone Arm	80	x	x	x	x	x	x

Part No.	Description	Page No.	2400	2400S	2404	2404S	2410	2410S
116075	Arm and Brush Assembly	31, 80	x	x	x	x	x	x
116078 to	116097 Selector Buttons A - V	71, 72, 73	x	x	x	x	x	x
116078-A	Selector Buttons Complete Set	73	x	x				
116078-B	Selector Buttons, Complete Set	71			x	x		
116080 to								
116087	Selector Buttons C - K	72					x	x
116098 to								
116107	Selector Buttons 1 - 0	72	x	x				
116103 to								
116107	Selector Buttons 6 - 0	72					x	x
116108	Letter Button C	71			x	x		
116109	Letter Button D	71			x	x		
116110 to								
116135	Selector Buttons 1 to 26	71			x	x		
116136 to								
116140	Selector Buttons 1 to 5	72					x	x
116142	Tone Arm	30	x		x		x	
116147	Gusset, Program Holder, R.H.	98, 99	x	x	x	x	x	x
116148	Gusset, Program Holder, L.H.	98, 99	x	x	x	x	x	x
116149	Star Casting, Grille	95	x	x	x	x	x	x
116150	Casting, Lower Grille	95	x	x	x	x	x	x
116151	"W" Casting, Dome	95	x	x	x	x	x	x
116152	"W" Casting, L.H. and R.H.	95	x	x	x	x	x	x
116153	Cheek Casting, R.H.	95	x	x	x	x	x	x
116154	Cheek Casting, L.H.	95	x	x	x	x	x	x
116155	Top Casting, Dome, R.H.	95	x	x	x	x	x	x
116156	Top Casting, Dome, L.H.	95	x	x	x	x	x	x
116157	Casting, R.H. Window and Coin Entry	71, 72, 73, 95	x	x	x	x	x	x
116158	Casting, L.H., Window	72, 95					x	x
116167	Tone Arm Assembly	39		x		x		x
116168	Selector Switch, Numbers	73	x	x				
116169	Selector Switch, Letters	11, 71			x	x		
116178	Selector Switch Assembly, Letters	72					x	
116179	Selector Switch, Assembly, Numbers	11, 71			x	x		
116180	Coin Box Door	95	x	x	x	x	x	x
116181	Amplifier, Mod. 538, Less Tubes	39		x		x		x
116183	Extrusion, Side, R.H.	95	x	x	x	x	x	x
116184	Extrusion, Side, L.H.	95	x	x	x	x	x	x
116185	Extrusion, "U", Door Glass	95	x	x	x	x	x	x
116186	Extrusion, Side Plate, L.H.	96	x	x	x	x	x	x
116187	Extrusion, Side Plate, R.H.	96	x	x	x	x	x	x
116188	Extrusion, Side Plate, R.H.	95	x	x	x	x	x	x
116189	Extrusion, Side Plate, L.H.	95	x	x	x	x	x	x
116190	Extrusion, Rub Rail, R.H.	96	x	x	x	x	x	x
116191	Extrusion, Rub Rail, L.H.	96	x	x	x	x	x	x
116193	Extrusion, Lower Door Glass	95	x	x	x	x	x	x
116194	Extrusion, Grille, L.H.	95	x	x	x	x	x	x
116195	Extrusion, Grille, R.H.	95	x	x	x	x	x	x
116196	Extrusion, Bottom	95	x	x	x	x	x	x
116197	Extrusion, Lower Grille, R.H.	95	x	x	x	x	x	x
116198	Extrusion, Lower Grille, L.H.	95	x	x	x	x	x	x
116203	Extrusion, Top Dome	95	x	x	x	x	x	x
116216	Anti-cheat Guard and Bracket Assembly	95	x	x	x	x	x	x
116230	Grille Screen, Center	95	x	x	x	x	x	x
116231	Grille Screen, L.H.	95	x	x	x	x	x	x
116232	Grille Screen, R.H.	95	x	x	x	x	x	x
116235	Glass, Stereo	95		x		x		x

Part No.	Description	Page No.	2400	2400S	2404	2404S	2410	2410S
116236	Glass, Hi-Fi	95	x		x		x	
116248	Grille Plate	95	x	x	x	x	x	x
116249	Connector Link, Number Switch	11,71			x	x		
116250	Support Bracket, Switch Mounting Channel	11,71	x	x	x	x	x	x
116251	Connector Link, Letter Switch	71			x	x		
116253	Stop Bracket, Reset Button	71,72,73	x	x	x	x	x	x
116255	Connector Link, Numbers Switch	73	x	x				
116257	Window Blank (Even Glo)	71,73	x	x	x	x	x	x
116258	Window Blank, Coin Denomination, Clear	71,72,73	x	x	x	x	x	x
116259	Connector Link, Letters	72					x	x
116260	Connector Link, Letter Switches	10	x	x				
116261	Plate, Program Selector	72,95					x	x
116262	Plate, Program Selector	71,95			x	x		
116263	Plate, Program Selector	73,95	x	x				
116264	Mounting Channel, Selector Switch	11,71			x	x		
116265	Mounting Channel, Selector Switch	10,73	x	x				
116266	Mounting Channel, Selector Switch	72					x	x
116268	Relay Shield & Silk Screen Assembly	3		x				x
116272	Extrusion, Top, Program Holder	97			x	x		
116273	Extrusion, Bottom	97			x	x		
116274	Extrusion, Vertical End	97			x	x		
116275	Extrusion, Vertical, Intermediate	97			x	x		
116276	Extrusion, Vertical, Center	97			x	x		
116277	Extrusion, Top, Program Holder, Outer	97,99	x	x	x	x		
116279	Extrusion, Intermediate, L.H.	99	x	x				
116280	Extrusion, Intermediate, R.H.	99	x	x				
116281	Extrusion, Vertical End	99	x	x				
116282	Extrusion, Center, Inner	99	x	x				
116283	Extrusion, Bottom	99	x	x				
116284	Extrusion, Top	99	x	x				
116285	Extrusion, Vertical Center	99	x	x				
116286	Extrusion, Program Holder, Frame, Intermediate, R.H.	98					x	x
116287	Extrusion, Program Holder, Frame, Intermediate, L.H.	98					x	x
116288	Extrusion, Program Holder Frame, Vertical End	98					x	x
116289	Extrusion, Program Holder Frame, Vertical Center	98					x	x
116290	Extrusion, Program Holder, Frame, Bottom	98					x	x
116291	Extrusion, Program Holder, Frame, Top	98					x	x
116300	Extrusion, Decorative Background	80	x	x	x	x	x	x
116303	Coin Chute Assembly	2,96	x	x	x	x	x	x
116304	Reinforcing Angle, Bottom	99	x	x				
116305	Extrusion, Program Holder, Frame, Top	98	x	x			x	x
116309	Cover and Bracket Assembly, Light Box	72,73		x				x
116312	Separator, Light Box	72,73		x				x
116314	Select Blank and Silk Screen Assembly	71,72,73	x	x	x	x	x	x
116315	Shield, Select Blank	71,72,73	x	x	x	x	x	x
116317	Select Button	71,72,73	x	x	x	x	x	x
116318	Reset Button	71,72,73	x	x	x	x	x	x
116327	Cover, Cabinet Base	95	x	x	x	x	x	x
116331	Record Indicator Panel	97,98,99	x	x	x	x	x	x
116336	Spring, Stop and Bracket Assembly, L.H.	96	x	x				
116337	Spring, Stop and Bracket Assembly, R.H.	96	x	x				
116341	Side Plate Assembly, R.H.	95	x	x	x	x	x	x
116342	Side Plate Assembly, L.H.	95	x	x	x	x	x	x
116352	Coin Bag Housing Assembly	2,3,96	x	x	x	x	x	x
116354	Program Holder and Silk Screen Assembly A1-B0	99	x	x				

Part No.	Description	Page No.	2400	2400S	2404	2404S	2410	2410S
116355	Program Holder and Silk Screen Assembly C1-F0	99	x	x				
116356	Program Holder and Silk Screen Assembly G1-K0	99	x	x				
116357	Program Holder and Silk Screen Assembly L1-P0	99	x	x				
116358	Program Holder and Silk Screen Assembly S1-V0	99	x	x				
116359	Program Holder and Silk Screen Assembly Q1-R0	99	x	x				
116362	Program Holder and Silk Screen Assembly A	98					x	x
116363	Program Holder and Silk Screen Assembly B-C	98					x	x
116364	Program Holder and Silk Screen Assembly D-E	98					x	x
116365	Program Holder and Silk Screen Assembly F-G	98					x	x
116366	Program Holder and Silk Screen Assembly H & J	98					x	x
116367	Program Holder and Silk Screen Assembly H	98					x	x
116369	Adjusting Clip, Selector Switch, Number	11, 71, 73	x	x	x	x	x	x
116380	Instruction Panel	97			x	x		
116381	Spacer	97			x	x		
116392	Program Holder and Frame Assembly	97			x	x		
116407	Decorative Background	80	x	x	x	x	x	x
116426	Overlay, Decorative Background	80	x	x	x	x	x	x
116428	Catch Plate, Lock	95	x	x	x	x	x	x
116429	Reject Rod	2	x	x	x	x	x	x
116431	Descriptive Escutcheons	97			x	x		
116432	Descriptive Escutcheons	97			x	x		
116433	Descriptive Escutcheons	97			x	x		
116434	Descriptive Escutcheons	97			x	x		
116435	Descriptive Escutcheons	97			x	x		
116436	Program Holder & Silk Screen Assembly A1-A26	97			x	x		
116437	Program Holder & Silk Screen Assembly B1-B26	97			x	x		
116438	Program Holder & Silk Screen Assembly C1-C26	97			x	x		
116439	Program Holder & Silk Screen Assembly D1-D26	97			x	x		
116453	Spring, Fall Support	96	x	x	x	x	x	x
116458	Hinge, Dome	96	x	x	x	x	x	x
116461	Top Plate	96	x	x	x	x	x	x
116491	Spacer, Record Indicator Panel	99	x	x				
116503	Lock Assembly, R.H. and L.H.	95	x	x	x	x	x	x
116507	Instruction Panel	99	x	x				
116508	Shield, Decorative Background, L.H.	80					x	x
116509	Shield, Decorative Background, L.H.	80	x	x	x	x		
116510	Decorative Liner, L.H.	96	x	x	x	x	x	x
116511	Decorative Liner, R.H.	96	x	x	x	x	x	x
116519	Instruction Panel, Program Holder	98					x	x
116522	Shield, Program Holder, L.H.	80	x	x				
116523	Shield, Program Holder, R.H.	80	x	x				
116560	Decorative Shelf & Decal Assembly, R.H.	80					x	x
116561	Decorative Shelf & Decal Assembly, L.H.	80					x	x
116562	Program Holder Assembly	98					x	x
116563	Label, Coin Denomination, Stereo	98					x	x
	5 Plays Half Dollar / 7 Plays Half Dollar							
	2 Plays Quarter / 3 Plays Quarter							
	1 Play 15¢ / 1 Play 10¢							
116564	Decorative Shelf and Decal Assembly, R.H.	80			x	x		
116565	Decorative Shelf and Decal Assembly, L.H.	80			x	x		
116566	Program Holder Assembly	99	x	x				
116570	Fall Support Assembly	96	x	x	x	x	x	x
116575	Shield, Decorative Background, R.H.	80			x	x		
116577	Shield, Decorative Background, R.H.	80					x	x
116581	Back Rail Assembly	96	x	x	x	x	x	x
116585	Shield, Grille Plate	95	x	x	x	x	x	x
116594	Decorative Side, Dinoc, Upper, R.H.	95	x	x	x	x	x	x

Part No.	Description	Page No.	2400	2400S	2404	2404S	2410	2410S
116596	Decorative Side, Dinoc, Upper, L.H.	95	x	x	x	x	x	x
116604	Light Diffuser Assembly, Glass	96	x	x	x	x	x	x
116606	Wire, Plug and Socket Assembly, Dome	95	x	x	x	x	x	x
116622	Coin Denomination Plate, " 5 cent Credit, 10 cent Selection, Make any Selection"	72		x				x
116623	Coin Denomination, 7 Plays Half Dollar, 3 Plays Quarter, 1 Play 10¢	71,73	x		x		x	
116624	Instruction Plate "Insert Half Dollars, Quarters, Dimes, Nickels"	72					x	x
116625	Coin Denomination Plate, 5 Plays Quarter, 2 Plays Dime, 1 Play Nickel	73	x		x		x	
116639	Mounting Bracket and Insulator Assembly	11,71	x	x	x	x	x	x
116644	Transformer, Low Voltage	40,91		x		x		x
116645	Transformer, Amplifier Power	40,91		x		x		x
116647A	Dinoc, Lower Panel, R.H. & L.H.	95	x	x	x	x	x	x
116715	Frame, Coin Box Door	95	x	x	x	x	x	x
116716	Shoulder Screw, Bottom Mount	2	x	x	x	x	x	x
116717	Shoulder Screw, Top Mount	2	x	x	x	x	x	x
116722S	Label, Coin Denomination, Stereo 6 Plays Half Dollar 9 Plays Half Dollar 2 Plays Quarter 4 Plays Quarter 1 Play 10¢ 1 Play 10¢	98		x				x
116723	Slide Switch, Spring Return	10,11,71,72,73	x	x	x	x	x	x
116724	Switch, Slide Type	74,76,79	x	x	x	x	x	x
116725	Cartridge, Sonotone, Stereo	31,80		x		x		x
116727	.7 Mil Sapphire Tip Needle, Stereo	29,31		x		x		x
116732	Tip and Mounting Bracket Assembly, Outer	89					x	x
116733	Tip and Mounting Bracket Assembly, Inner	89					x	x
116735	Heat Shield	96	x	x	x	x	x	x
116737	Spring, Kick-off	89					x	x
116740	Support Bracket Assembly, Heat Shield	96	x	x	x	x	x	x
116767S	Label, Coin Denomination 6 Plays Half Dollar 10 Plays Half Dollar 2 Plays Quarter 4 Plays Quarter 1 Play 15¢ 1 Play 10¢	98		x				x
116768S	Coin Denomination, 10 Plays Half Dollar, 5 Plays Quarter, 1 Play Dime	71,73	x		x	x	x	
116769S	Coin Denomination, 9 Plays Half Dollar, 4 Plays Quarter, 1 Play Dime	73	x		x	x	x	
116770S	Coin Denomination, 10 Plays Half Dollar, 4 Plays Quarter, 1 Play Dime	73	x		x	x	x	
116831	Stud, Eccentric, Lift Arm Guide	19	x	x				
116833	Roller, Lift Arm Guide	20	x	x				
116836	Mounting Bracket, Hub and Pin Assembly	19	x	x				
116905	Motor and Worm Assembly	29,81	x	x	x	x	x	x
116921	T.A. Release Bracket and Pivot Assembly	29	x	x	x	x	x	x
116954	Light Diffuser	72,73		x				x
116986	Gear and Ratchet Wheel Assembly	31,87,88,90	x	x	x	x	x	x
116997	Pinion	31,84,85	x	x	x	x	x	x
117005	Lock Strike Assembly	95	x	x	x	x	x	x
117006	Selector Centering Clip	16	x	x			x	x
117007	Relay, TR#2	76					x	x
117048	Relay, Pulse	35,78					x	x
117061	Relay, Letter Timing	35,78					x	x
117244	Bracket for Dual Price, Service	96		x				x
117252	Plate and Pin Assembly	88	x	x				
117254	Bumper, Record Guide, Outer	22,81	x	x	x	x	x	x

INDEX TO ADJUSTMENTS...2400 SERIES

TROUBLE SHOOTING

TROUBLE SHOOTING

TROUBLE SHOOTING

TROUBLE SHOOTING CHART 2400 SERIES

POWER AND LIGHT FAILURE

SERVICE CALL	SYMPTOMS	CAUSE	CORRECTIONS
1. No power to phonograph.	Fluorescent lamps fail to light Phonograph fails to operate.	(a) Line cord plug not making contact in outlet.	Repair or replace plug or outlet.
		(b) Line cord broken.	Repair or replace cord.
		(c) Fuse blown in amplifier.	Replace 15 amp. fuse in amplifier.
		(d) "House" fuse blown.	Check for overload. Replace fuse.
		(e) Main switch broken.	Replace main switch in amplifier.
2. Fluorescent lamp fails to light.	Phonograph operates normally. No fluorescent lights available for program and cabinet.	(a) Defective lamp.	Replace lamp.
		(b) Defective starter.	Replace starter.
		(c) Faulty ballast.	Replace ballast.
		(d) Open circuit in lamp or ballast wiring.	Trace and repair. See Wiring Diagram Pages 63 and 64.
		(e) Lamp loose in socket.	Seat lamp firmly in socket.
3. Fluorescent lamps light. Select lamp fails to light.	Phonograph operates normally.	(a) Lamp burned out.	Replace with No. 44 Mazda Lamp.
		(b) 150 ohm resistor open on selector button panel.	Replace resistor. Refer to schematic applicable to model in question.
		(c) Open circuit to select lamp.	Trace and repair. Refer to schematic applicable to model in question.
	Phonograph fails to select or operate.	(a) Safety switch open.	Adjust safety switch. Normally held closed by record guide assembly.
		(b) Warped record jammed between record carrier and record guide casting.	Remove Warped record.
4. Select lamp lights Phonograph fails to operate.	Phonograph selection circuit operates. Mechanism fails to operate.	(a) Record loading switch turned off or fails to operate.	Turn on record loading switch. Front of chassis mounting plate.
		(b) Service switch turned off.	Turn service switch on.
		(c) Defective service switch.	Replace switch.
		(d) Transfer switch contacts fail to make in at rest position.	Clean and adjust contacts. See Page 26.
		(e) Reverse relay N. C. contacts fail to make in at rest position.	Clean and adjust contacts. Located in junction box.
		(f) Play switch contacts fail to make in at rest position.	Clean and adjust contacts. See Page 26.
		(g) Over-ride switches fail to close.	Clean and adjust switches. See Page 14.

COIN AND CREDIT FAILURE

SERVICE CALL	SYMPTOMS	CAUSE	CORRECTIONS
1. Rejects coins.	Coins are returned or hang up in rejector.	(a) Bind in scavenger rod holding reject gate open.	Remove bind in scavenger rod linkage.
		(b) Incorrect adjustment in rejector.	Adjust rejectors in accordance to National Rejectors bulletin.
		(c) Rejector needs cleaning.	Clean dirt and foreign matter from rejectors.
2. Quarter and half dollar coins drop through to cash bag. No credits.	Quarters and half dollars fail to establish credits. Nickels and dimes establish credits.	(a) 8/10 amp. fuse blown in playrak. 25¢ and 50¢ coins hang on coin switches.	Adjust coin switches. See Page 4. Replace fuse.
		(b) Open or burnt coin magnet coils.	Replace coin magnet coils in playrak. See Page 4, Fig. 6.
		(c) Incorrect alignment of rejector and coin switch levers.	Seat rejector fully into mounting frame. Align coin switch levers as shown on Page 4, Fig. 5.
		(d) Dirty or incorrectly adjusted key switch.	Clean and adjust key switch as shown on pages 4 & 5, Figs. 7 & 8.
		(e) Excessive spring pressure or poor contact on coin switches.	Clean and adjust coin switches. See Page 4, Fig. 5.
3. All coins drop through to cash bag. No credits. "Select" light fails to come on.	All coins fail to establish credits.	(a) Coin switch plug not seated in slug rejector socket.	Seat plug firmly in socket.
		(b) Open ground connection of coin switch assembly.	Check common circuit feeding all coin switches. See schematic for model in question.
		(c) Open circuit or faulty solder connection in coin mechanism.	Check wiring and connections. See diagram of model in question.
		(d) 2 amp. fuse blown in D. C. circuit. 8 amp. fuse blown in 24 V A.C. circuit.	Check for short circuit. Check fuses for right size.
4. Free credits on nickel or dime deposit only.	Continuous free credits on nickels or dimes Quarters and half dollars establish correct credits.	(a) Nickel or dime coins hang on coin switch.	Adjust and check coin switch as shown on Page 4.
		(b) Nickel or dime coins hang at bottom of rejector, holds coin switch closed.	Check coin exits of rejector with coins. Remove burrs or obstruction causing coins to hang.
		(c) Nickel or dime coin switch incorrectly adjusted - contacts stay closed.	Adjust and check contact clearance and pressure as shown on Page 4.
5. Occasional extra credits on quarter and half dollar coins.	More than normal number of credits for coin deposited.	(a) Cancel pawl occasionally fails to engage next ratchet tooth of cancel wheel.	Adjust cancel solenoid position and pawl adjusting cam for correct pawl stroke as shown on Pages 5 & 6.
		(b) Accumulator wheels bounce when cancel coil operates.	Same as above. See Pages 5 and 6.
		(c) Key switch occasionally fails to open.	Adjust key switch. See Pages 4 & 5, Figs. 7 & 8.

COIN AND CREDIT FAILURE CONT'D.

SERVICE CALL	SYMPTOMS	CAUSE	CORRECTIONS
6. Occasionally fails to give the right amount of plays for coins deposited.	Occasionally selector latch pin fails to release. Occasionally fails to establish correct amount of credits when coins are deposited.	(a) TR-1 relay releases too early Condenser across relay defective. or open 50Ω resistor in series with capacitor.	Replace 20 mfd. condenser across TR-1, used for time delay or replace open 50Ω 5W resistor. Check playrak for proper adjustment. See pages 4, 5 and 6.

SELECTION CIRCUIT

SERVICE CALL	SYMPTOMS	CAUSE	CORRECTIONS
1. Selector buttons lock in, fail to release. Select light on.	Selection circuit and mechanism fails to operate.	(a) 3/10 amp. fuse blown in number coil circuit.	Check for grounded number coils. Replace 3/10 amp. fuse.
		(b) Burnt out #55 bulb in bottom of stepper junction box.	Replace #55 lamp in bottom of stepper junction box.
		(c) Start switch fails to make contact.	Check start switch adjustment. See Page 13, Fig. 30.
		(d) Open contacts 3 and 4 or 5 and 6 on TR-2 relay.	Clean and adjust contacts on TR-2 located in junction box.
		(e) Latch switches fail to close.	Clean and adjust number and letter latch switches. See Page 12.
		(f) N. C. phonograph hold out contacts 9 and 10 on latch relay in stepper dirty.	Clean and adjust contacts. See Page 42.
		(g) N. C. contacts 3 and 4 on number pulse relay in stepper dirty.	Clean and adjust contact. See page 42 and Functional Drawing for model in question.
		(h) Letter coil plunger caught between rocker arms.	See instructions on adjustment of start switch and number quadrant on Pages 13 and 14.
2. Selector buttons fail to latch in.	Select light on, latch solenoid fails to energize.	(a) N. C. control contacts 3 and 4 of latch solenoid dirty or fail to make.	Clean and adjust N. C. control contacts as shown on Page 12.
		(b) Open circuit to latch solenoid coil.	Check wiring diagram. See schematic for model in question.
		(c) Reset button N. C. switch held open.	Check for bind in rod or button. Check contacts.
	No select light. Latch solenoid fails to energize.	(a) TR-1 relay fails to energize. Relay coil open.	Check TR-1 relay coil in coin register mechanism.
		(b) N.C. contacts 3 and 4 on pulse relay open.	Clean and adjust. See Page 42.
		(c) Contacts 5 and 6 on TR-1 relay dirty.	Clean and adjust contacts on TR-1. in coin register mechanism. See page 42.
		(d) Check contacts 5 & 6 on TR-2	Clean and adjust. See Page 42.

SELECTION CIRCUIT CONT'D.

SERVICE CALL	SYMPTOMS	CAUSE	CORRECTIONS
3. Select light on. Electric selector operates. Phonograph fails to operate.	Selector pins fail to release.	(a) 8/10 amp. fusetron blown in letter coil circuit.	Check for grounded letter coil. Replace fuse.
		(b) Mechanical bind in latch solenoid plunger.	Adjust latch solenoid coil for free movement of solenoid plunger. Clean plunger.
		(c) Dirty contacts 5 and 6 on latch relay in stepper or contacts 1 and 2 on TR-3 when stepper is used.	Clean and adjust contacts. See Wiring Diagram for locations of contacts and page 42.
	Selector pins released. Changer motor, turntable motor and amplifier fail to turn on.	(a) Bind in wobble ring or over-ride switches not making contact.	See Page 14. for adjustments.
4. Plays extra records when a certain selection is made.	Two or more selector pins released when one selection is made.	(a) Selector coil selected shorted to adjacent coil or coils.	Remove short between coils in selector drum assembly.
		(b) Short between selection circuits in selector button switches, selector button switch cables, or plug and sockets.	Check cable, plugs and sockets for short. Repair.

MECHANICAL AND ELECTRICAL FAILURES

SERVICE CALL	SYMPTOMS	CAUSE	CORRECTIONS
1. Selects, but fails to start mechanism.	Fails to release selector pins.	(a) Letter or number selector button backs out too far after a selection is made opening the selector circuit to the number or letter coils.	Take up lost motion in the selector button switch connector link. Check selector switch latch adjustment for minimum overtravel. See Page 12, paragraph c.
		(b) 8/10 amp. fuse blown in letter coil circuit.	Check for right size fuse. Replace fuse.
		(c) Open letter coil.	Replace letter coil.
	Selector pins release. Mechanism fails to start.	(a) Open over-ride switch.	Clean and adjust switch. Page 14.
		(b) Open contact on reverse relay.	Clean and adjust switches. Located in junction box.
		(c) Open contact on transfer switch.	Clean and adjust switches. Page 26.
		(d) Open record loading switch.	Replace switch. Located at front of changer.
		(e) Open service switch.	Replace switch. Located in junction box.
		(f) Changer motor trouble.	Clean commutator or replace motor.
2. Selects, searches, brings up record. Then blows 2 amp. fuse.	Changer motor is jammed in search position with record lift arm in carrier.	(a) Transfer switch failed to actuate in reverse cycle of Changer motor.	Adjust transfer switch actuator screw. Clean contacts. See Page 26.

MECHANICAL AND ELECTRICAL FAILURES CONT'D.

SERVICE CALL	SYMPTOMS	CAUSE	CORRECTIONS
3. Plays wrong selections.	Occasionally repeats same selection.	(a) Not cancelling selector pin.	See instructions for proper adjustment. See Pages 17 and 18.
		(b) Improper adjustment of carriage switch or stop screw.	
		(c) Selector pin assembly not properly centered.	See Page 16.
		(d) Short at commutator rings.	Check for short, carriage switch must make and break.
4. Repeats same selection continuously.	Main cam motor turns in a reverse position but does not drive record carrier.	(a) Driving pawl tension spring broken or weak.	Turn mechanism manually until hole in main drive gear is directly over driving pawl mounting screw. Remove nut and screw and work driving pawl out. Replace with new driving pawl.
5. Repeats same selection occasionally.	Selector crank jammed against cancelled selector pin.	(a) Wrong holding pawl engaged tooth on record carrier casting.	Check adjustment of actuating screw and stop screw. See Pages 22, 23, 24 and 25.
		(b) Cancelled selector pin fails to latch.	Check selector pin cancelling adjustment. Pages 17 and 18.
6. Some records fail to play.	Record fails to clamp on turntable.	(a) Record hole off center.	Remove bad record.
		(b) Worn turntable clamp washer.	Replace worn clamp washer.
		(c) Record guide track stop brackets not properly adjusted.	See instructions for adjustments, page 21.
		(d) Record lift arm up position not properly adjusted.	See instructions for adjustments, page 20.
7. Turntable turns, no music.	Tone arm misses record.	(a) Undersize record.	Remove undersize record.
		(b) Tone arm feed-in start position not properly adjusted.	Adjust tone arm start position. See Page 29, w (1).
		(c) No record in carrier selected space.	Place record in empty space. See pages 21 & 22 for back stop pawl adjustment.
8. Turntable fails to run.	Amplifier dead.	(a) Over-ride relay fails to energize.	Check Schematic for model in question.
		(b) Dirty contact on over-ride relay.	Clean and check contacts for proper action.
	Amplifier on.	(a) Loose drive pulley.	Tighten Allen set screw and pulley.
		(b) Defective turntable motor.	Repair or replace motor.
		(c) Turntable belt broken ("O" ring).	Replace "O" Ring.
9. Record fails to cancel.	Record fails to return to carrier after playing.	(a) Trip switch not operating.	Adjust trip switch. Page 30 (5).
		(b) Defective trip switch.	Replace defective switch.

MECHANICAL AND ELECTRICAL FAILURES CONT'D.

SERVICE CALL	SYMPTOMS	CAUSE	CORRECTIONS
		(c) Open contact in play switch.	Clean and adjust contacts.
		(d) Open in reject button.	Repair or replace reject button.
		(e) Open contact on remote cancel relay if used.	Clean and adjust relay contacts.
10. Mechanism runs slow.	Changer motor slow.	(a) Defective selenium rectifier.	Replace defective rectifier.
		(b) Dirty commutator on changer motor.	Clean changer motor commutator
11. Record comes up. Returns without playing.	Puts record back without playing.	(a) Open contact on play switch.	Clean and adjust contacts.
		(b) Dynamic brake circuit not working.	Check schematic circuit at play switch, trip switch, reject button, transfer switch.
		(c) Defective trip switch.	Replace trip switch.
		(d) Reject button sticking.	Repair reject switch.
12. Throws records.	Throws records.	(a) Bind in record lift arm guide rollers.	Adjust guide rollers. See pages 18 and 19.
		(b) Guide tips on record lift arms not properly aligned.	Straighten guide tips. See Page 19.
		(c) Bent record separators.	Straighten record separators.
		(d) Carrier not properly indexed.	See Page 21 for back stop pawl adjustment.
13. One side of record okay. The other side distorted tone.	One side of record turns at 45 RPM. The other side does not.	(a) Record track stop brackets not adjusted properly, causing record to drag.	Adjust record stop bracket. See Page 21.
		(b) Record lift arm coming up too high.	Adjust record lift arm stop. See Page 20.
14. Music skips.	Tone arm jumps one or two grooves, giving a thumping sound while record is playing.	(a) Worn needle.	Replace needle.
		(b) Too much end play in turntable shaft.	Shim between turntable pulley and bushing. See Pages 32 and 33.
		(c) Tone arm not balanced properly.	Check tone arm balance. See Page 30 (4).
		(d) Tracking pressure of tone arm too light	Check tone arm gram pressure. See Page 30 (3).
15. Excessive record wear.	Record wear faster than normal.	(a) Worn or chipped needle.	Replace needle. Replace worn record.
		(b) Bind in tone arm.	Check for freedom of tone arm cable. Free bind in tone arm.
		(c) Incorrect needle pressure.	Adjust tone arm for proper gram pressure. See Page 30 (3).

MECHANICAL AND ELECTRICAL FAILURES CONT'D.

SERVICE CALL	SYMPTOMS	CAUSE	CORRECTIONS
		(d) Poor material in records.	Replace worn records. Check needle wear.
16. Excessive lint accumulation on needle.	Needle skips, sound distorted.	(a) Excessive lint and dust from records.	Remove lint from needle and brush with small brush. Spray needle, cartridge and brush with Anti-Static Cleaner.
		(b) Tone arm brush incorrectly adjusted.	Adjust tone arm brush. See page 30 (6).

SOUND FAILURE

SERVICE CALL	SYMPTOMS	CAUSE	CORRECTIONS
1. No sound.	Turntable turning. No sound from record.	(a) Pick up cartridge open or shorted.	Check contacts on cartridge. Replace if defective.
		(b) Pick up cable not connected or open.	Check pick up cable for open.
		(c) Blown 2 amp. amplifier fuse.	Replace fuse in amplifier with proper size.
		(d) Defective tube.	Replace defective tube.
		(e) Volume control turned off.	Turn up volume control.
		(f) Remote volume control jumper plug out.	Replace jumper plug.
		(g) Mute switch shorted.	Clean and adjust mute and play switch contacts. Page 26.
		(h) Open speaker circuit.	Check and repair open speaker circuit.
2. Sound blasts in at start of record.	Automatic level control not squelched.	(a) Mute and squelch switch not connected.	Insert mute and squelch plug.
		(b) Open contact on squelch switch.	Adjust play switch to operate squelch circuit. Check contacts.
		(c) Defective 12AU7 or 12AX7 tube.	Replace defective tubes.
		(d) Selector pins released before phonograph is connected to line.	Selector pins should all be down before line cord is connected.
3. Poor tone quality.	Tone distortion.	(a) Remote speakers mismatched.	Check remote speakers for proper phasing.
		(b) Wrong remote volume control used.	Check model of remote volume control.
		(c) Remote volume control not properly connected.	Check wiring of volume control.
		(d) Worn or defective cartridge.	Replace defective cartridge.
		(e) Defective tubes.	Replace bad tubes.

SOUND FAILURE CONT'D.

SERVICE CALL	SYMPTOMS	CAUSE	CORRECTIONS
Poor tone quality.	Tone distortion	(f) Fader switch not properly adjusted.	Check fader switch settings.
		(g) Distortion without remote speakers connected to phonograph.	If no auxiliary speakers are used, be sure fader switch is set on "Phonograph Only".
	Waver in music.	(a) Drag in turntable assembly.	Check record clamp setting. See Pages 27 and 28.
		(b) Bind in turntable drive gear.	Check adjustment on Page 28, Fig. 75.
		(c) Loose drive pulley or flywheel.	Tighten pulley. Check for proper clearance. See Page 28, Fig. 75.
			Tighten flywheel.
		(d) Too much end play in turntable shaft.	Add shim between turntable bushing and pulley. See Page's 32 and 33.
		(e) Warped record.	Replace record.
		(f) Eccentric hole in record.	Replace record.
4. Hum or other noise	Noise from speakers when mechanism is changing records.	(a) Mute switch not connected.	Check mute switch socket on amplifier.
		(b) Mute switch fails to close.	Clean and adjust mute, play and squelch switches.
	Noise from speakers while record is playing.	(a) Defective filter condenser in amplifier.	Replace filter condenser.
		(b) Defective tube.	Replace defective tube.
		(c) Remote volume control or speaker cables near neon lamps, transformers or wiring.	Use only closely woven shielded cable. Reroute shielded cable.
		(d) Open ground on shielded cable of remote volume controls.	Check for open ground on shield. Repair.
		(e) Tone arm wire too close to safety and trip switch cable.	Reroute tone arm cable.
		(f) Open or poor connection at remote volume plug.	Check plug for open jumper wires or poor connections.

DUAL PRICE PHONOGRAPH

SERVICE CALL	SYMPTOMS	CAUSE	CORRECTIONS
1. Fails to accumulate credits on 10¢-25¢-50¢ coins.	Accumulator motor fails to run.	(a) Dirty contacts at coin trip switches.	Clean and adjust. See page 9, paragraph f.
		(b) Coins jammed in coin tracks.	Clean coin tracks. Check for bent coins.
		(c) Lower coin stop hung open.	Check full cycle switch page 9, paragraph g. Check for freedom of action.
		(d) Dirty contact 5 and 6 on anti-cheat relay.	Clean and adjust contact.
		(e) Open contact at rotary wiper arm and accumulator printed board.	Adjust contacts. See page 9, paragraph h.
		(f) Anti-cheat relay fails to operate.	Clean and adjust coin trip switches, page 9, paragraph f. Clean and adjust rotary contact arms on accumulator printed board, page 9, paragraph h.
	Motor runs, fails to accumulate credits.	(a) Dirty contacts 1 and 2 on anti-cheat relay.	Clean and adjust contacts.
	Accumulator motor starts then stalls.	(a) Full cycle switch fails to close.	Clean and adjust contacts, page 9, paragraph g.
2. Phonograph won't select.	Credits add and make select light is on. Latch coil is energized, buttons won't latch.	(a) Dirty contacts 3 and 4 on anti-cheat relay.	Clean and adjust contacts.
		(b) Dirty contacts 1 and 2 on TR-1.	Clean and adjust contacts.
		(c) Poor contact at rotary wiper arm and interlock circuits - printed board.	Adjust Contacts. See page 9, paragraph h.
		(d) Trying to select a 15¢ selection with only 10¢ credit.	Insert another coin.
		(e) Dirty contact 3 and 4 on pricing relay.	Clean and adjust contact.
		(f) Open circuit at 10¢ pricing bar.	Check for proper group connections on 10¢ price bar.
		(g) Open circuit at 15¢ pricing bar.	Check for loose connections.
	Buttons lock in - won't select.	(a) Dirty contact 1 and 2 at control switch of latch coil.	Clean and adjust contacts, page 12, paragraph e.
		(b) Dirty contact, letter or number latch switch.	Clean and adjust latch switches, page 12, paragraph f.
		(c) Dirty contact 3 and 4 on number pulse relay in stepper.	Clean and adjust contact.
		(d) Dirty contact 9 and 10 on latch relay in stepper.	Clean and adjust contact.
		(e) Open contact at number selector switch.	Adjust latch lever, page 12, paragraph c.
		(f) Open number selector coil.	Replace defective coil.

DUAL PRICE PHONOGRAPH CONT'D

SERVICE CALL	SYMPTOMS	CAUSE	CORRECTIONS
		(g) Blown 3/10 Amp. selector coil fuse.	Check for grounds in circuit and replace fuse. Check start switch operation and contacts 5 and 6 on TR-2. Check contacts 5 and 6 on TR-3 - clean and adjust.
		(h) Burned out #55 lamp in TR-2 circuit - bottom of stepper.	Check for burned out number coils. Replace lamp.
		(i) Dirty contact 7 and 8 on TR-2.	Clean and adjust contact.
		(j) Dirty contact 5 and 6 on TR-2.	Clean and adjust contact.
		(k) "Start" micro switch fails to operate.	Check switch action and adjustment, page 13, paragraph b.
		(o) Rocker plate jammed. Cannot rotate.	Check for bent letter coil plungers. Check rocker plate adjustments, page 13, paragraph a.
		(p) Dirty contact 5 and 6 on TR-3.	Clean and adjust contact.
	Takes off credits but does not relase selector pin.	(a) Blown 8/10 selector coil fuse.	Check for grounded circuits. Replace fuse.
		(b) Open at letter selector switch.	Latch levers not properly adjusted. See page 12, paragraph c.
		(c) Open letter selector coil.	Replace defective coil.
		(d) Dirty contact 1 and 2 on pulse relay.	Clean and adjust contact.
3. Cheats customers	Does not give correct number of selections but accumulates correct number of credits.	(a) Fails to add extra credit on accumulator when making 10¢ selections due to dirty contacts 1 and 2 on pricing relay.	Clean and adjust contacts.
		(b) Dirty contact 9 and 10 on pulse relay.	Clean and adjust contact.
		(c) Dirty contact 4 and 5 on transfer relay in stepper.	Clean and adjust contact.
		(d) Dirty contact 7 and 8 on TR-3 in bottom of stepper.	Clean and adjust contact.
		(e) Cancel pawl stop bracket not properly adjusted.	See pages 6 and 7, paragraphs b and d for adjustment.
4. Plays free.	Fails to cancel credits.	(a) Dirty contact 7 and 8 on pulse relay.	Clean and adjust contact.
		(b) Mechanical bind in cancel linkage or spring off cancel pawl.	Check for proper cancel action and missing or broken springs. See pages 6 and 7, paragraphs b and d.
	Adds too many credits	(a) Escapement pawl of accumulator not properly adjusted.	See page 6, paragraph a for proper adjustment.
		(b) Coin trip switches not opening.	See page 9, paragraph f for switch adjustment.

2410 MODEL

SERVICE CALL	SYMPTOMS	CAUSE	CORRECTIONS
1. Phonograph won't select.	Buttons lock in.	(a) No jumper plug in stepper socket number 4.	Install jumper plug. Pins number 6,7,8 must be common.
		(b) Dirty contact 9 and 10 on latch relay in stepper if stepper is used.	Clean and adjust contact.
		(c) Dirty contact, number or letter latch switches.	Clean and adjust.
		(d) Dirty contact 1 and 2 control switch at latch coil when D.P. is used.	Clean and adjust.
	Takes credit off and does not release selector pin.	(a) Open circuit at number selector switch	Adjust latch lever. See page 12, paragraph c.
		(b) Blown 8/10 selector coil fuse.	Check for grounded colls. Replace fuse.
		(c) Dirty contact 3 and 4 on TR-1.	Clean and adjust contact.
		(d) Dirty contact 1 and 2 on TR-2.	Clean and adjust contact.
		(e) Open at letter selector switches.	Adjust letter latch lever. See page 12, paragraph c.
2. Gives wrong selection.	Selects a 3 or 8 selection.	(a) Drive coil linkage loose or binding or rocker plate binding.	Check rocker plate and driver linkage for freedom of action.
	Cannot select 2 or 7.	(a) Open contacts Index switch.	Clean and adjust switch. See page 15, paragraph g.
		(b) Rocker plate stop positions not properly adjusted.	See page 14, paragraph f, for adjustment.
	Cannot select 2, 7, 4 or 9.	(a) Dirty contact 4 and 5 on index relay.	Clean and adjust contact.
		(b) Rocker plate stop positions not properly adjusted.	See page 14, paragraph f, for adjustment.