W-1181-3c

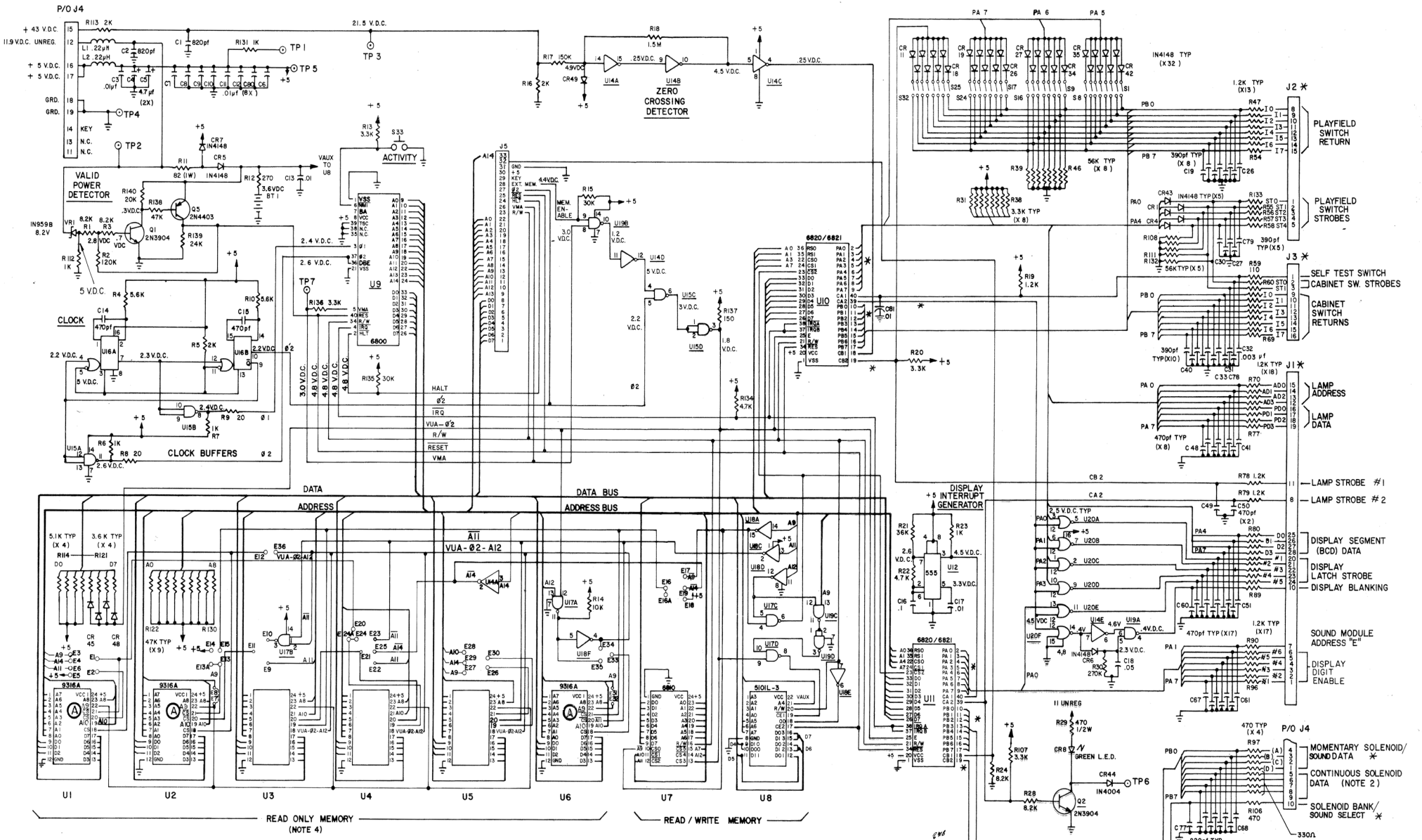

NOTES

1. ✱ INDICATES "AID" TEST POINT.
2. REMOVE A3J4 BEFORE USING AS AID TEST POINT
3. PREFIX ALL REFERENCE DESIGNATIONS WITH "A4"
4. EXACT CHIP COMPLEMENT USED IN SOCKETS U1 THRU U6 CAN VARY FOR DIFFERENT GAMES AND PRODUCTION LOTS. TABLES OF MEMORY CHIPS AND CORRESPONDING JUMPERS FOR DIFFERENT GAMES AVAILABLE FROM BALLY FIELD SERVICE DEPARTMENT.

No.	LET.	CHANGE	DATE	BY	CK.
1	A	A9 was VCC2 on U1, U2, U6 A10 was CS	12-76	S.T.	

ALL DESIGN, OPERATIVE AND PROCESS DATA PERTAINING TO THE ARTICLE SHOWN ON THIS SHEET IS THE PROPERTY OF BALLY MFG. CORP., CHICAGO, ILL. THIS INFORMATION IS DISCLOSED IN CONFIDENCE AND IS NOT TO BE COPIED, REPRODUCED, REVEALED TO OR APPROPRIATED BY OTHERS, IN PART OR IN WHOLE, WITHOUT THE EXPRESS CONSENT OF THE OWNERS. THE PRINT IS LOANED AND MUST NOT BE USED IN ANY MANNER DETRIMENTAL TO THE INTEREST OF THE OWNERS, AND MUST BE RETURNED ON DEMAND.

REMOVE ALL BURRS

TOLERANCES ON DIMENSIONS UNLESS OTHERWISE SPECIFIED
FRACTIONS ± 1/64
DECIMALS ± .005
ANGLES ± 1°

DO NOT SCALE DRAWING

DR. BY E.V.	DATE 5-11-78	
CK. BY E.C.M.	DATE 5-15-78	
APP'D. BY	DATE	
APP'D. BY	DATE	
FINISH:		
HARDENING:		

Bally MANUFACTURING CORP.
2640 BELMONT AVENUE
CHICAGO, ILLINOIS

1119-E

PRINT CONTROL | PROD. CONT. | PLAN. DEPT. | ENG. DESIGN | CONT. DEPT. | MAT. MGR. | TOOL DEPT. | MAT'L. MGR. | TOTAL | SCALE

NAME: M.P.U. CONTROL BOARD SCHEMATIC

ASSEM. NO. USED ON W

MATERIAL

PART NO. W-1181-3c