REALISTIC®

Service Manual

20-214

DX-390

AM/FM WORLD-BAND PORTABLE RADIO

Catalog Number: 20-214

CONTENTS

SPECIFICATIONS

FM

TEST ITEM	CONDITION	NOMINAL	LIMIT	UNIT
Tuning Range	Min.	87.5	± 0.15	MHz
	Max.	108.0	± 0.15	MHz
Intermediate Freq.		10.7	± 0.15	MHz
Max. Sens.	90MHz		18	dBμ
	98MHz		18	dBμ
	106MHz		18	dBμ
Usable Sens. (S/N 30dB)	90MHz	18	24	dBμ
	98MHz	18	24	dBμ
	106MHz	18	24	dBμ
Dial Calibration	90MHz		± 100	kHz
	98MHz		± 100	kHz
	106MHz		± 100	kHz
Audio Fidelity -3dB (W/Pre-emphasis)	98MHz		150	Hz
	98MHz		8K	Hz
3dB Limiting (1mV)	98MHz	18	24	dBμ
Image Rejection	106MHz	36	30	dB
I. F. Rejection	90MHz	60	50	dB
Spurious Rejection	98MHz		50	dB
T. H. D. (75kHz. Dev.)	98MHz	2	4	%
Lowest Battery Voltage	98MHz	3.9	4.2	V
Max. Output Power	98MHz			mW
Output Power At 10% T. H. D.	98MHz		700	mW
Alter. Channel Select. 100μV	98MHz		25	dB
Stereo Indicator Sens.	98MHz		24	dBμ
Tuning indicator Sens. (2nd. dot)	98MHz		24	dBμ
Stereo Separation (1kHz)	98MHz	25	20	dB
Auto Scanning Stop Sens.	98MHz		24	dBμ
Overload Capacity	98MHz		100	dBμ
AM. Suppression (66dBμ)	98MHz		30	dB
Min. Output	98MHz		3	mV
Tone Action (10kHz)	98MHz		18	dB
S/N (22.5kHz Dev.)	98MHz	50	44	dB
Supply Voltage: DC 6V R.O.: 50mW	Load: 4 ohm	Modulation: 1kHz/22.5kHz Dev.		

MW

TEST ITEM	CONDITION	NOMINAL	LIMIT	UNIT
Tuning Range	Min.	520	± 5	kHz
	Max.	1620/1710	± 5	kHz
Intermediate Freq.	1st. IF	55845	± 1	kHz
	2nd.IF	450		
Max. Sens.	600kHz		58	dBμ/m
	1000MHz		56	dBμ/m
	1400MHz		56	dBμ/m
Usable Sens. (S/N 20dB)	600kHz	58	64	dBμ/m
	1000kHz	56	62	dBμ/m
	1400kHz	56	62	dBμ/m
Dial Calibration	600kHz		± 5	kHz
	1000kHz		± 5	kHz
	1400kHz		± 5	kHz
Audio Fidelity (-6dB)	1000kHz		150	Hz
	1000kHz		2100	Hz
A. C. A. (± 10kHz)	1000kHz		28	dB
T. H. D. (5mV)	1000kHz	2	4	%
A.G.C. F.O.M.	1000kHz		40	dB
Image Rejection	1400kHz		26	dB
I. F. Rejection (450kHz)	1000kHz		40	dB
Whistle Modulation (5mV/m)	21F/31F		15	%
Lowest Battery Voltage	1000kHz	3.9	4.2	V
Hum Modulation (5mV)	1000kHz			dB
Tuning Indicator Sens. (2nd. dot)	1000kHz		58	dBμ/m
Auto Scanning Stop Sens.	1000kHz		60	dBμ/m
Tone Action (3kHz)	1000kHz			dB
S/N Ratio (5mV)	1000kHz		32	dB
Current Consumption				
Output Power At 10% T.H.D.	1000kHz		700	mW
Overload Capacity (30% Mod 10% T.H.D.)	1000kHz		100	dBμ/m
Bandwidth 6dB (Wide)	1000kHz	7	4 ~ 9	kHz
Bandwidth 6dB (Narrow)	1000kHz	4.5	2.5 ~ 7	kHz
Supply Voltage: DC 6V R.O.: 50mW	Load: 4 ohm	Modulation: 1kHz 30% Mod.		

SW

TEST ITEM	CONDITION	NOMINAL	LIMIT	UNIT
Tuning Range	Min.	1621/1711	± 5	kHz
	Max.	29999	± 5	kHz
Intermediate Freq.	1st. IF	55845	± 1	kHz
	2nd. IF	450		
Max. Sens.	2300kHz		24	dBμ
	15100kHz		22	dBμ
	25600MHz		22	dBμ
Usable Sens. (S/N 20dB)	2300kHz	22	28	dBμ
	15100kHz	22	28	dBμ
	25600kHz	22	28	dBμ
Dial Calibration	2300kHz		± 5	kHz
	15100kHz		± 5	kHz
	25600kHz		± 5	kHz
Audio Fidelity (-6dB)	15100kHz		150	Hz
	15100kHz		2200	Hz
A. C. A. (± 10kHz)	15100kHz		28	dB
T. H. D. (60 dBμ)	15100kHz	2	4	%
A.G.C. F.O.M. (86 dBμ)	15100kHz		50	dB
Image Rejection	15100kHz	26	20	dB
I. F. Rejection (450kHz)	15100kHz		50	dB
Whistle Modulation (5mV)	21F/31F			%
Lowest Battery Voltage	15100kHz	3.9	4.2	V
Hum Modulation (5mV)	1000kHz			dB
Tuning Indicator Sens. (2nd. dot)	15100kHz		24	dBμ
Auto Scanning Stop Sens.	15100kHz		26	dBμ
RF Gain Control	15100kHz	25	± 6	dB
S/N Ratio (60 dBμ)	15100kHz		40	dB
SSB/CW Sens. (S/N = 10 dB)	15100kHz	-3	+ 3	dBμ
Output Power At 10% T.H.D.	15100kHz		700	mW
Overload Capacity (30% Mod 10% T.H.D.)	15100kHz	86	80	dBμ
Bandwidth 6dB (Wide)	15100kHz	7	4 ~ 9	kHz
Bandwidth 6dB (Narrow)	15100kHz	4.5	3 ~ 7	kHz
Supply Voltage: DC 6V R.O.: 50mW	Load: 4 ohm	Modulation: 1kHz 30% Mod.		

LW

TEST ITEM	CONDITION	NOMINAL	LIMIT	UNIT
Tuning Range	Min.	150	± 5	kHz
	Max.	519	± 5	kHz
Intermediate Freq.	1st.IF	55845	± 1	kHz
	2nd.IF	450		
Max. Sens.	173kHz		68	dBμ/m
	218MHz		66	dBμ/m
	281MHz		64	dBμ/m
Usable Sens. (S/N 20dB)	173kHz	68	74	dBμ/m
	218kHz	66	72	dBμ/m
	281kHz	64	70	dBμ/m
Dial Calibration	173kHz		± 5	kHz
	218kHz		± 5	kHz
	281kHz		± 5	kHz
Lowest Battery Voltage	218kHz	3.9	4.2	V
Hum Modulation (5mV)	1000kHz			dB
Tuning Indicator Sens. (2nd. dot)	218kHz		70	dBμ/m
Auto Scanning Stop Sens.	218kHz		72	dBμ/m
Tone Action (3kHz)	1000kHz			dB
S/N Ratio (5mV)	218kHz		24	dB
Supply Voltage: DC 6V R.O.: 50mW	Load: 4 ohm	Modulation: 1kHz 30% Mod.		

Note : Nominal specs represent the design specs. All units should be able to approximate these-some will exceed and some may drop slightly below these specs. Limit specs represent the absolute worst condition that still might be considered acceptable ; in no case should a unit fall to meet limit specs.

DISASSEMBLY INSTRUCTIONS

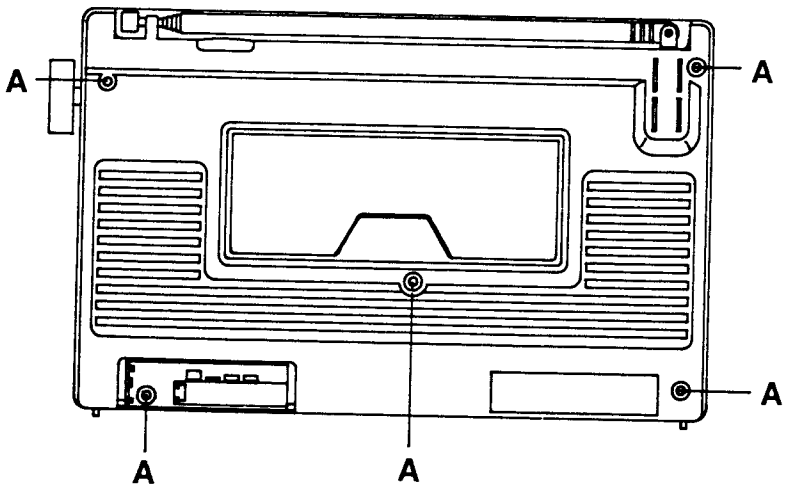

TO REMOVE BACK COVER

a. Unscrew 5 screws A.

b. Separate front and back cabinet.

TO REMOVE CONTROL PCB

a. Remove 5 screws E.

b. Remove Control PCB.

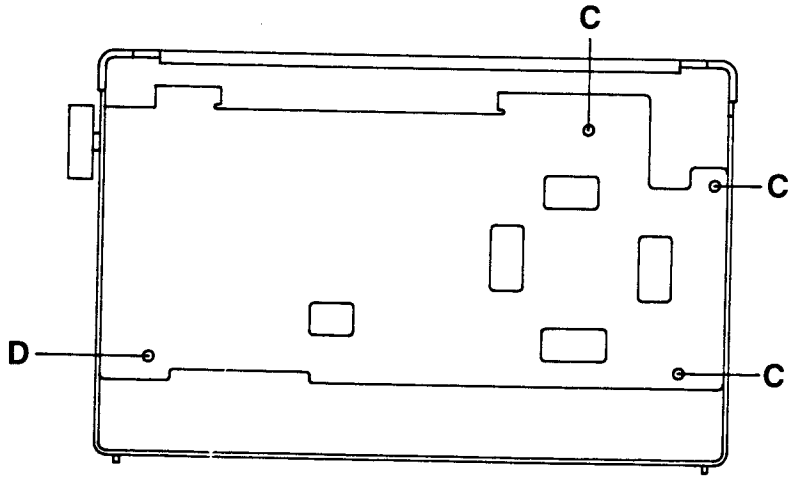

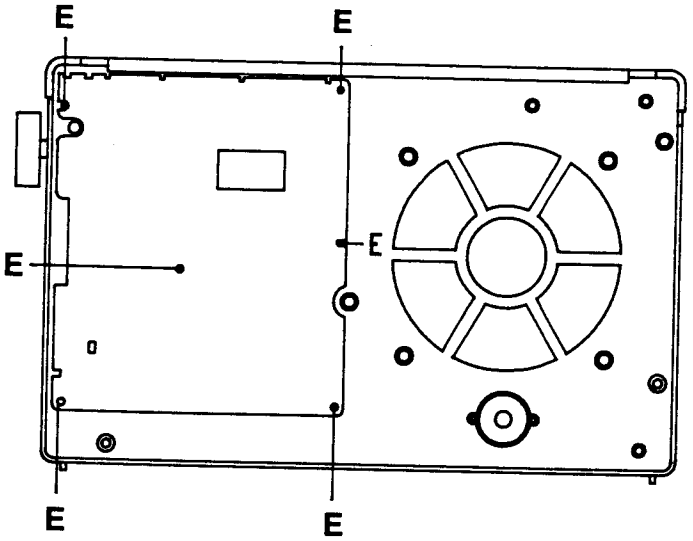

TO REMOVE MAIN PCB

a. Remove 3 screws C.

b. Remove Main PCB and 1 screw D.

BLOCK DIAGRAM

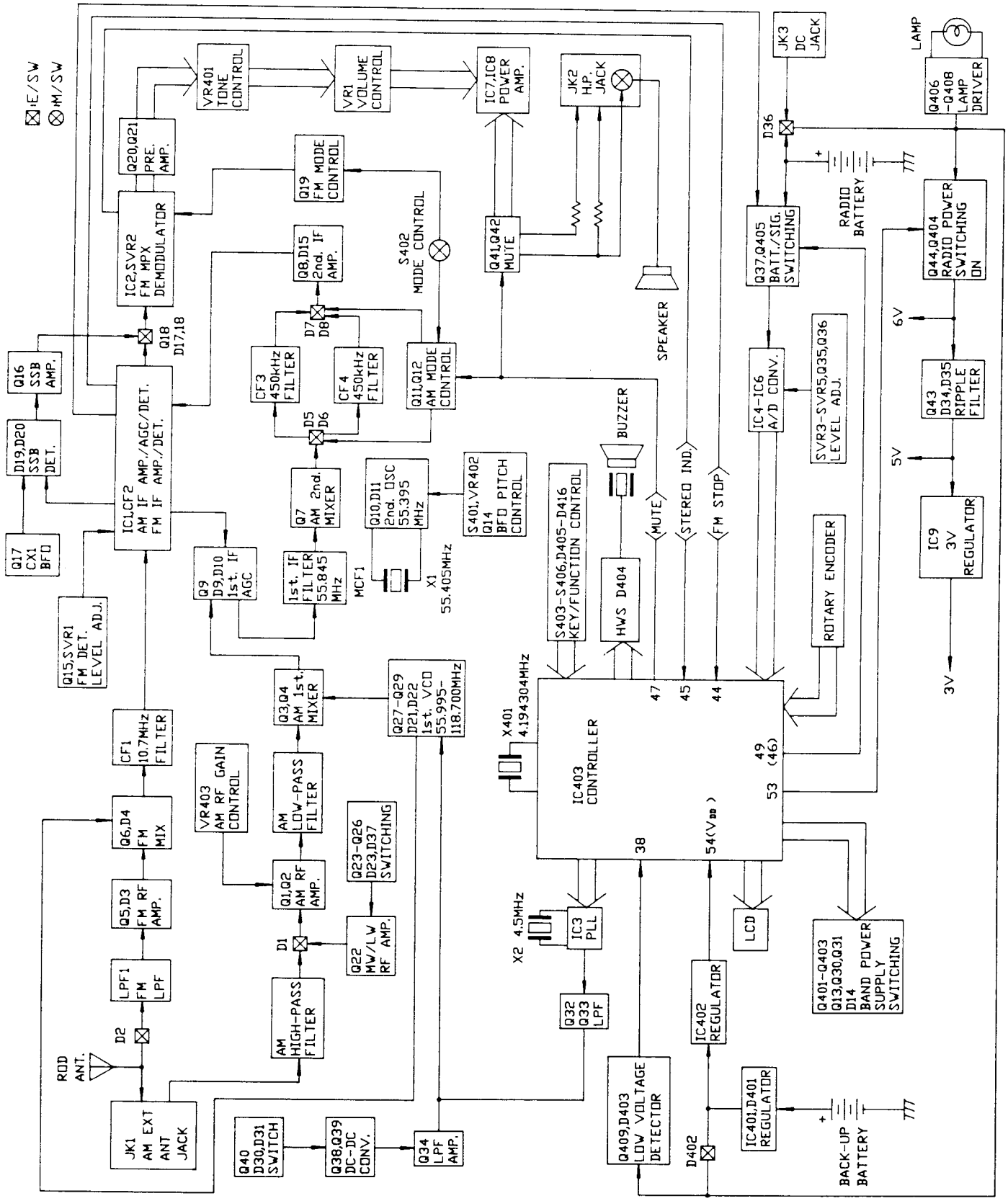

ALIGNMENT INSTRUCTIONS

Note: (1) All test points are shown both on schematic diagram and figures 1-13.
(2) Load in fresh batteries before any alignment procedures.

(1) ALIGNMENT FOR CLOCK TIME ACCURACY

a. Required Instrument
Frequency Counter

b. Alignment Procedure

Adjustment	Procedure
TC 401	(1) Turn the radio to SLEEP ON mode. (2) Set the SAFETY switch upward to electrically lock all push buttons. (3) Remove the batteries from the RADIO BATTERY compartment. The monitor TIME BASE signal starts functioning. (4) Connect a frequency counter to TP 15. (5) Adjust TC401 to reach a reading 524288 ± 4Hz (± 7.6PPM or ± 20sec/month) on counter.

c. Instrument Connection

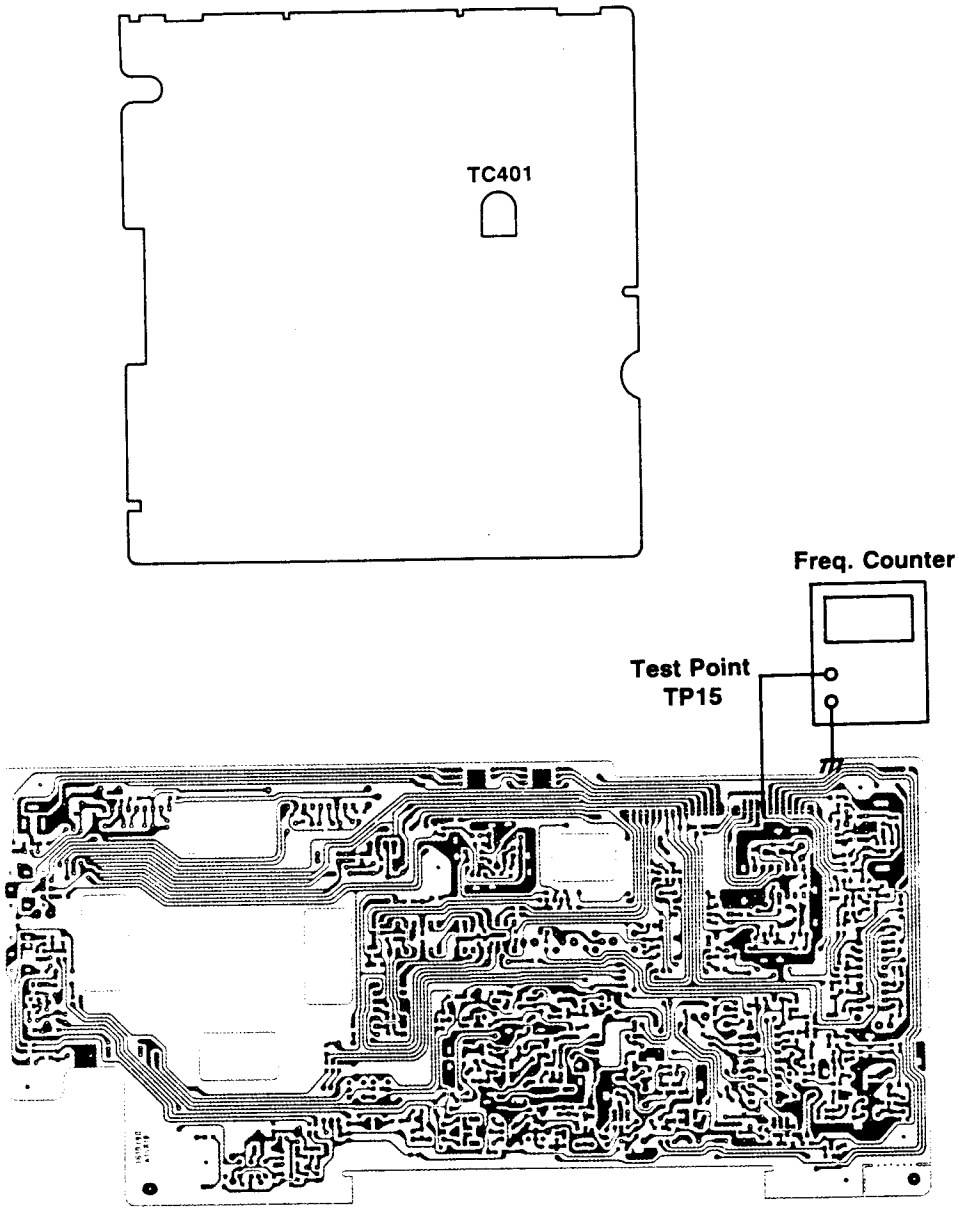

(2) **ALIGNMENT FOR PLL FREQUENCY**

a. Required Instrument
Frequency Counter

b. Alignment Procedure

Mode	Adjustment	Procedure
FM	TC4	(1) Turn the radio ON. (2) Select the tuner frequency at 108 MHz. (3) Connect the test probes of frequency counter to TP7 and ground. The ground point should be as near as possible to the test point TP7 (4) Adjust TC4 to have a reading of 118.69975MHz-118.70025MHz.

c. Instrument Connection

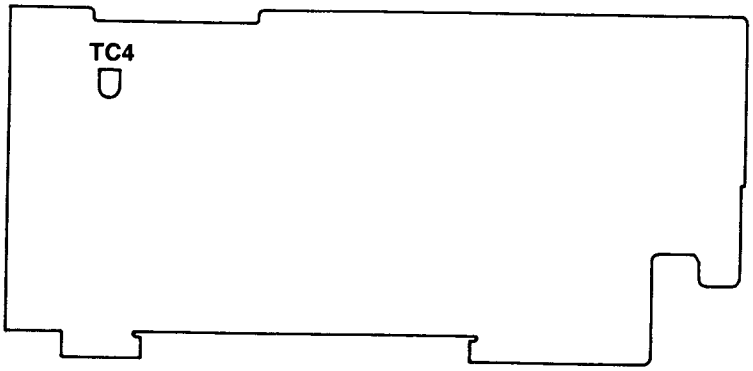

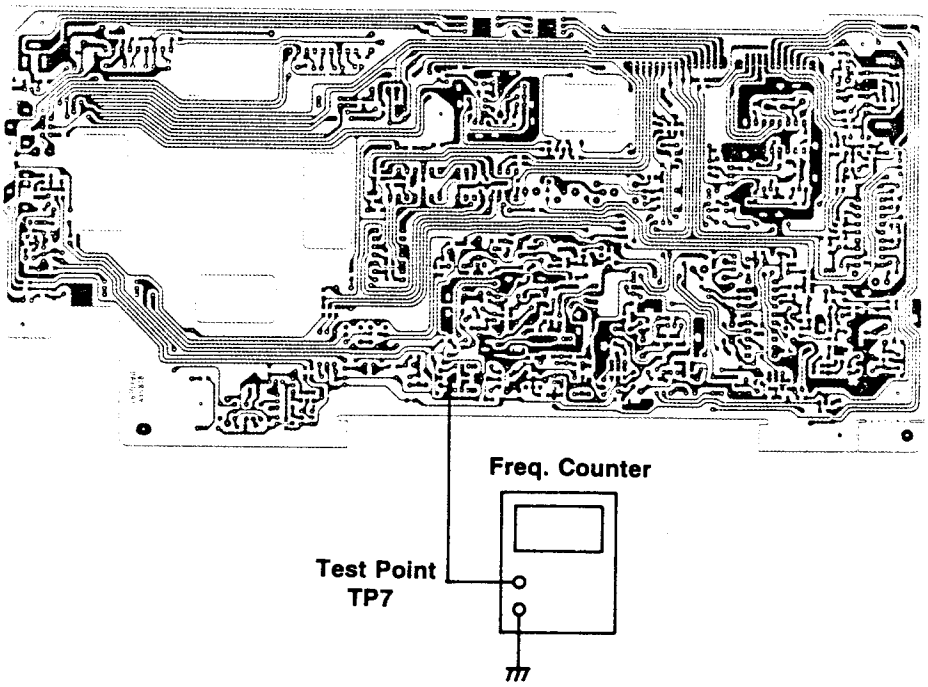

(3) **ALIGNMENT FOR AM 2ND LOCAL OSC**

a. Required Instrument

Frequency counter with higher impedance probe.

b. Alignment Procedure

Mode	Adjustment	Procedure
AM	L14	(1) Turn the radio ON. (2) Tune the frequency far away from any station to avoid interference. (3) Connect the test probes of frequency counter to TP8 and ground. (4) Adjust L14 to have a reading of 55.39485MHz-55.39515MHz.

Caution : A loading effect could emerge in the circuit if inserted with a lower impedance probe of frequency counter.

c. Instrument Connection

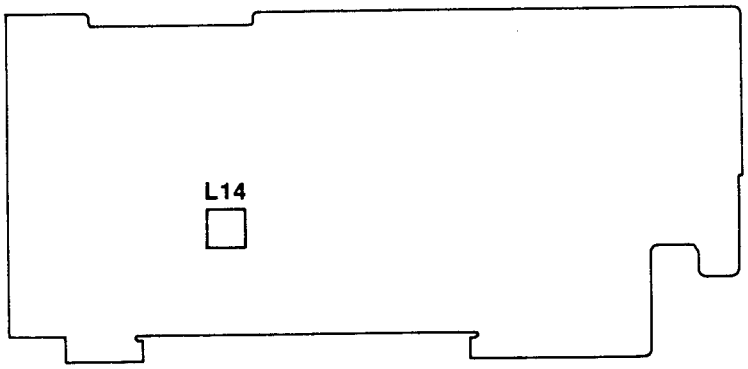

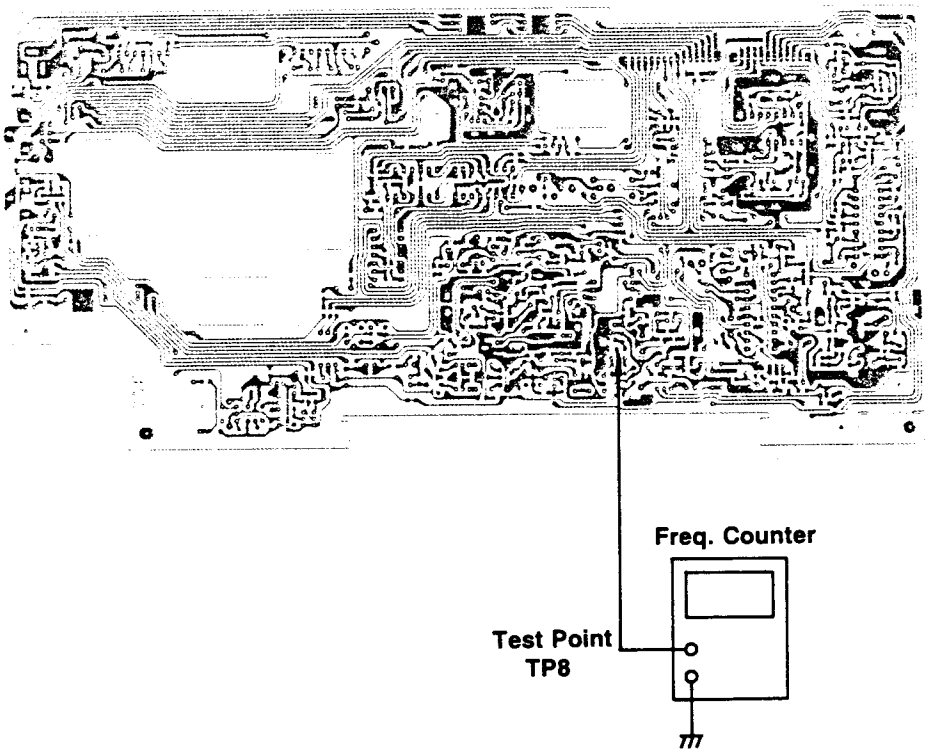

(4) ALIGNMENT FOR AM 2ND IF

a. Required Instrument

AM IF Sweep Generator with Scope

b. Alignment Procedure

Mode	Adjustment	Procedure
AM	T 4 T 6	(1) Turn the radio ON. (2) Set the bandwidth switch to WIDE position. (3) Connect the input terminal of AM IF sweep generator in series with a capacitor of 10μF to the test point TP5. (4) Connect the RF output terminal of AM IF sweep generator in series with a capacitor 0.1μF to another test point TP8. (5) Adjust T4 to have a max. output with a marker frequency of 450kHz on the sweep scope. (6) Adjust T6 to have a max. output with a marker frequency of 450kHz on the sweep scope. (7) Repeat (5) and (6) until a max. 450kHz output is reached.

c. Instrument Connection

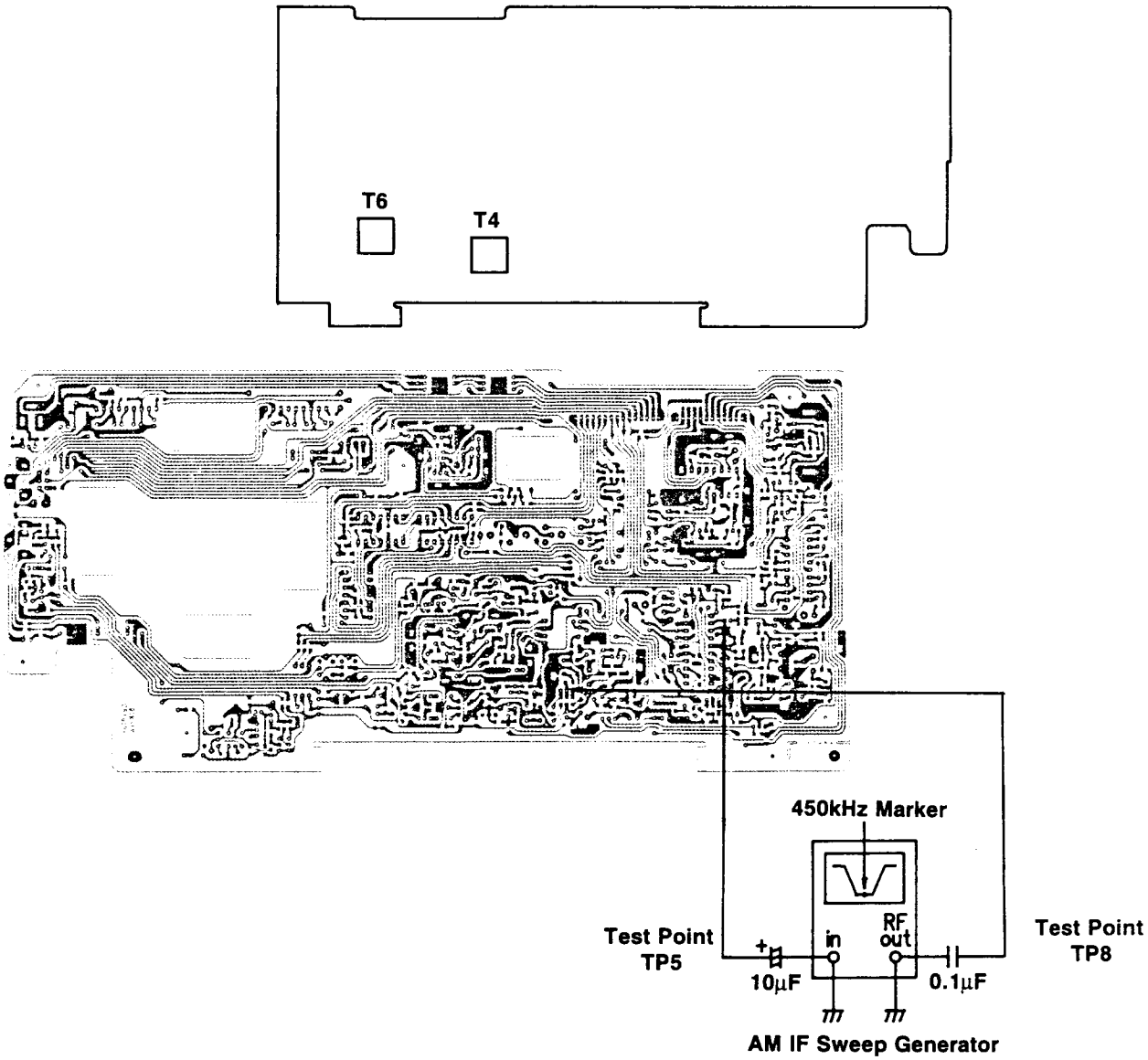

(5) **ALIGNMENT FOR FM IF**

a. Required Instruments

FM IF Sweep Generator with Scope.

b. Alignment Procedure

Mode	Adjustment	Procedure
FM	T5 T7	(1) Turn the radio ON. (2) Connect the input of FM IF sweep generator in series with a resistor of 1.2K ohm to the test point TP5. (3) Connect the RF output of FM IF sweep generator in series with a resistor of 2.2K ohm to another test point TP3. (4) Adjust T5 and T7 to have a max output and best symmetrical S curve with respect to the center marker frequency of 10.7MHz.

c. Instrument Connection

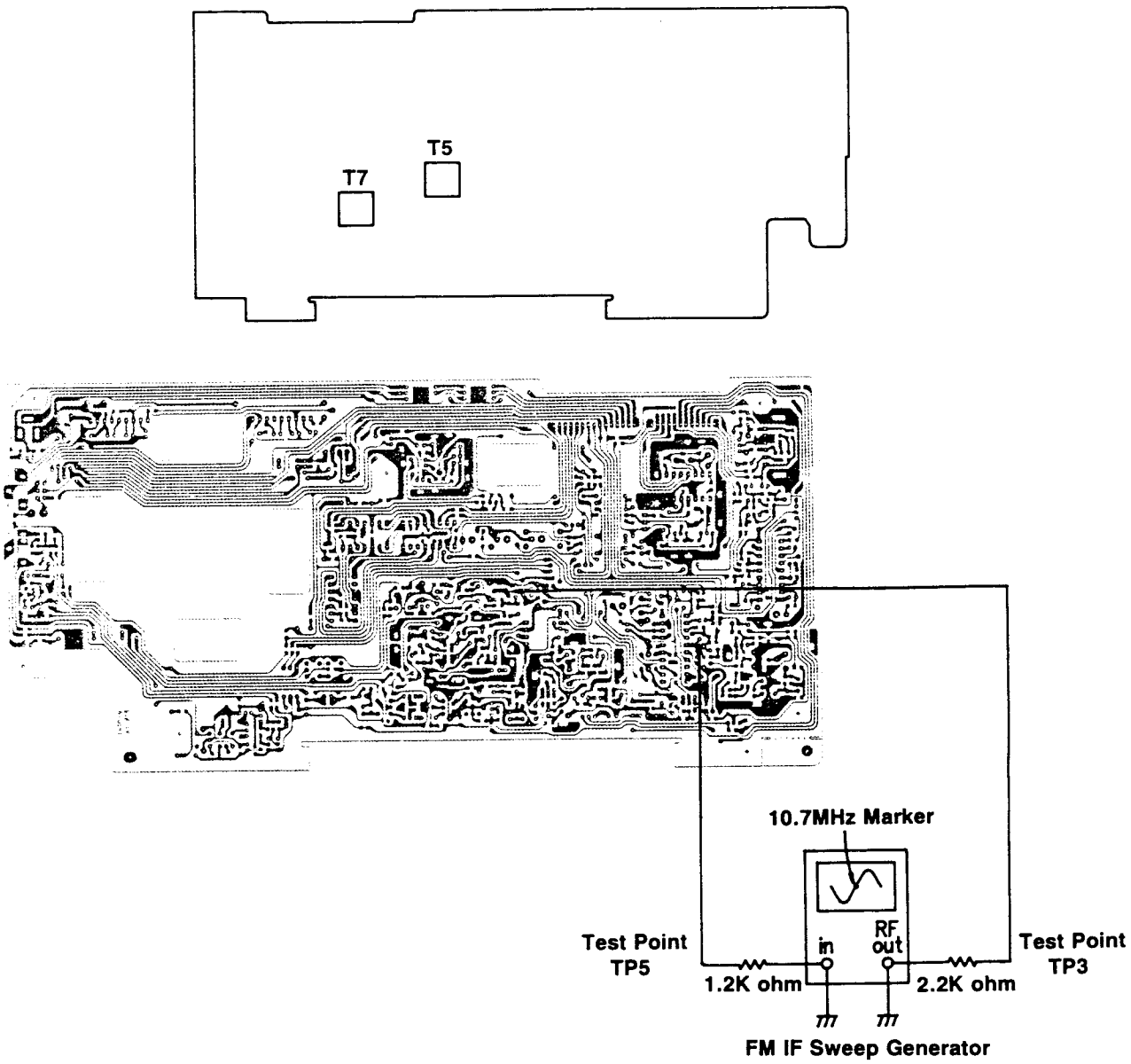

(6) ALIGNMENT FOR AM SENSITIVITY

a. Required Instruments

AM Signal Generator
SSVM
Frequency Counter

b. Alignment Procedure

Mode	Adjustment	Procedure
AM	T1 T3 L14	(1) Turn the radio ON. (2) Set the bandwidth switch to WIDE and RF GAIN VR to MAX position. (3) Tune the radio band frequency to 15.100MHz. (4) Feed a signal with modulation from AM signal generator output to the test point TP1 and connect a SSVM to speaker (TP14). (5) Tune the generator frequency exactly the same as that of the radio frequency displayed. (6) Adjust T1 and T3 to have a max. audio output. (7) Connect the probe of frequency counter at the test point TP4. (8) Adjust L14 to meet the specification frequency 450kHz ± 0.15kHz. (9) Remove the counter and repeat (6) to (8) until the specification frequency is met.

c. Instrument Connection

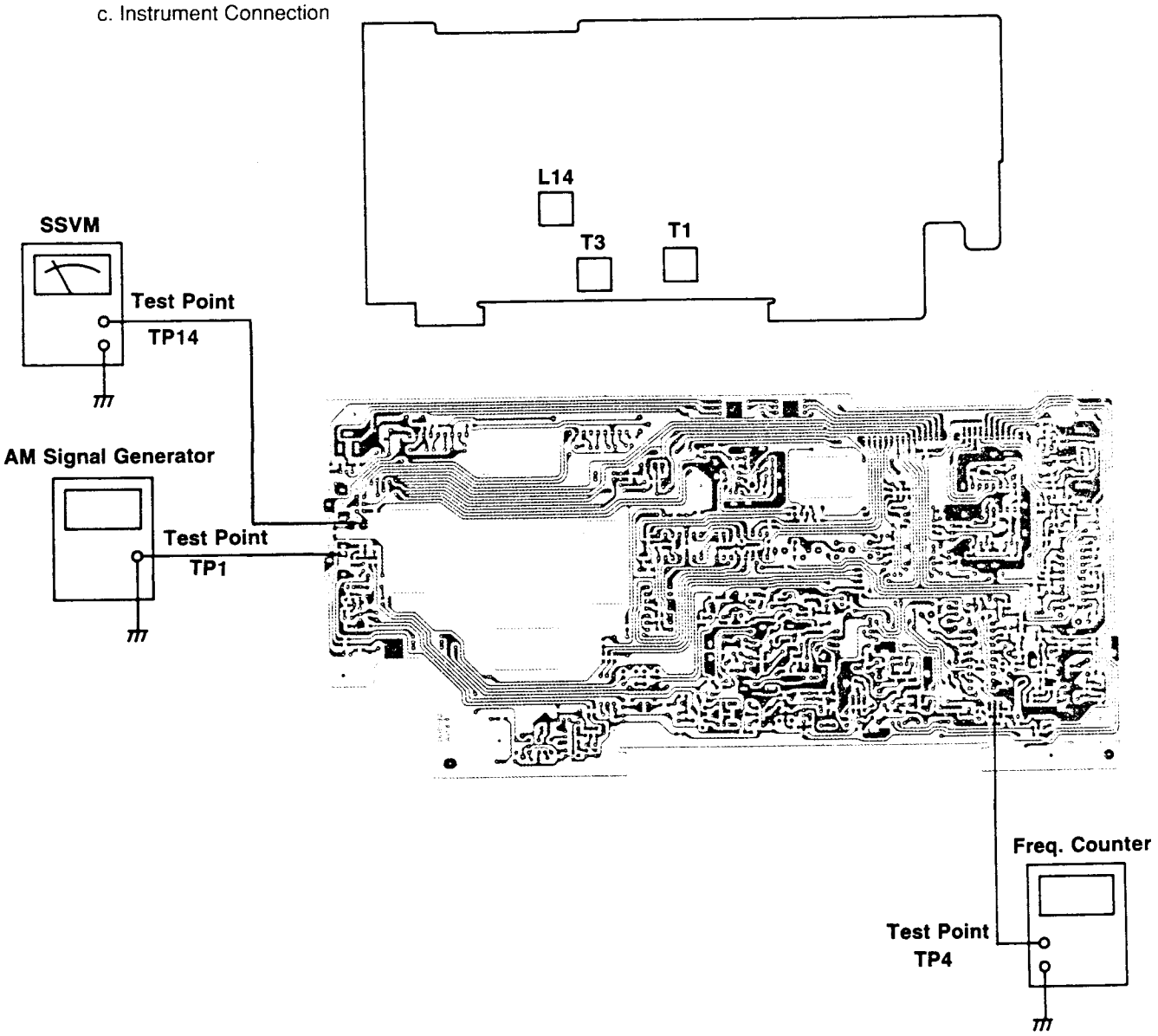

(7) **ALIGNMENT FOR BFO**

a. Required Instruments

AM Signal Generator

SSVM

b. Alignment Procedure

Mode	Adjustment	Procedure
AM	TC3	(1) Turn the radio ON. (2) Set the BFO switch to ON and BFO pitch to center position. (3) Tune the raido bank frequency to 15.100MHz. (4) Feed a signal without modulation from AM signal generator output to the test point TP1 and connect a SSVM to speaker (TP14). (5) Tune the generator frequency exactly displayed. (6) Adjust TC3 to have a minimum reading on SSVM.

c. Instrument Connection

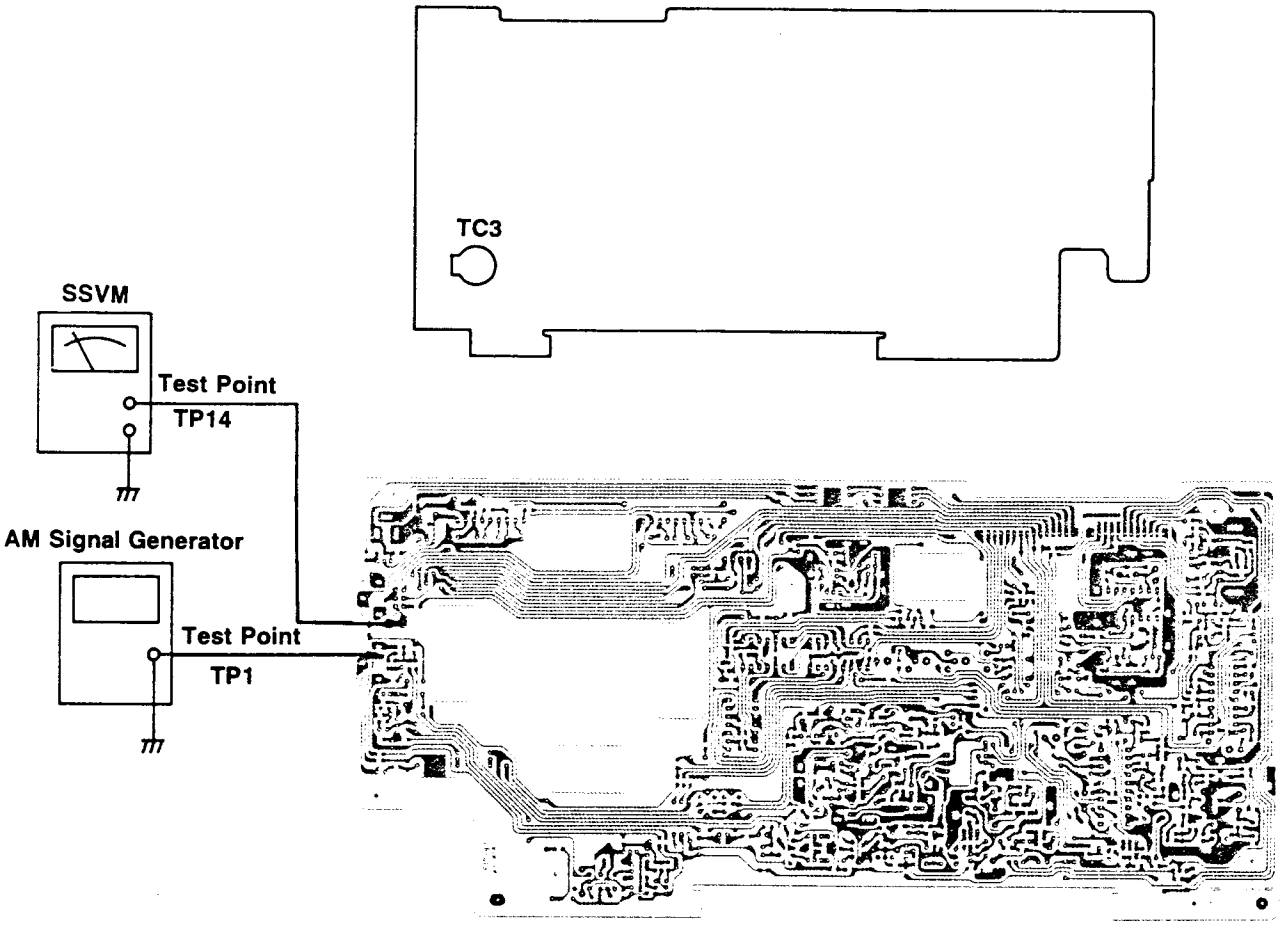

(8) ALIGNMENT FOR FM SENSITIVITY

a. Required Instruments
FM Signal Generator
SSVM

b. Alignment Procedure

Mode	Adjustment	Procedure
FM	L11, L12 TC1, TC2	(1) Turn the radio ON. (2) Connect a SSVM to speaker (TP14). (3) Connect a FM signal generator to the input terminal of Rod Ant. (TP2). (4) Set the signal generator to 22.5kHz deviation with 1kHz modulation. (5) Tune the radio band frequency to 90MHz and adjust L11, L12 to have a max. reading on SSVM. (6) Return the radio band frequency to 106MHz and adjust TC1, TC2 to have a max. reading on SSVM. (7) Repeat (5) and (6) until a best sensitivity on these two frequencies are formed.

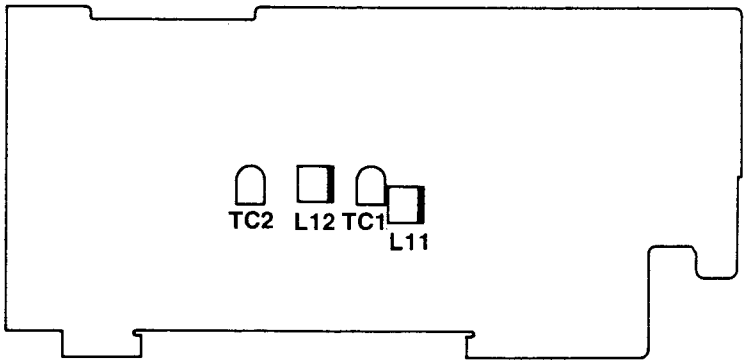

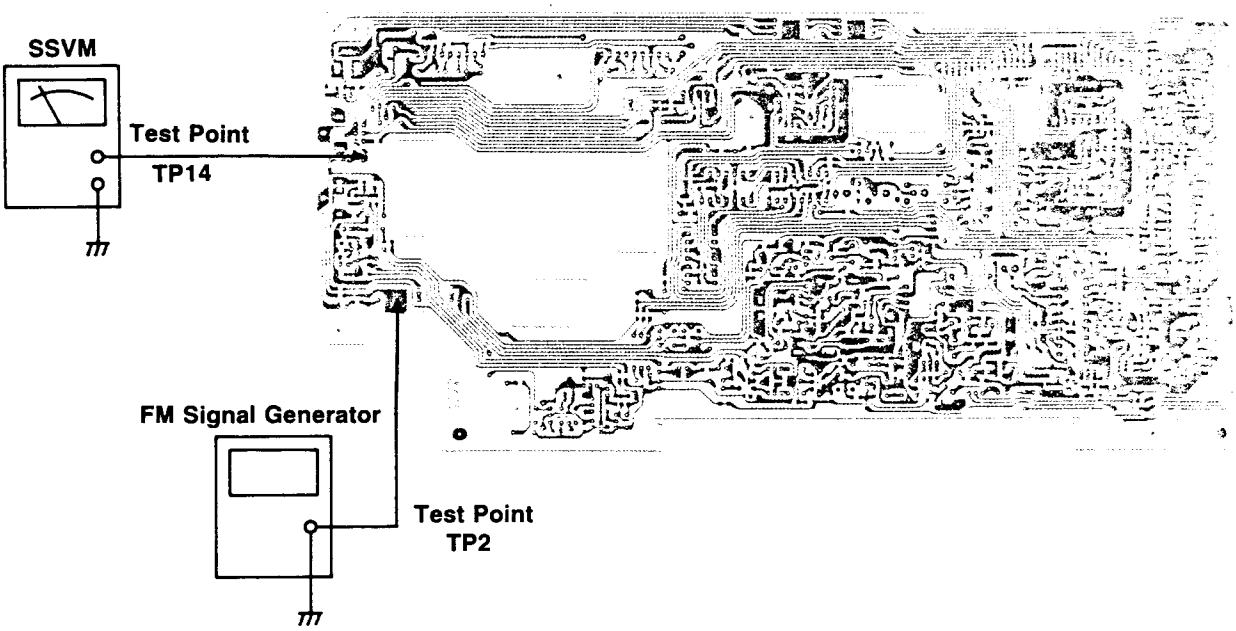

9) **ALIGNMENT FOR MPX**

a. Required Instrument
Frequency Counter

b. Alignment Procedure

Mode	Adjustment	Procedure
FM	SVR2	(1) Turn the radio ON. (2) Set the FM mode switch to STEREO position. (3) Insert a plug of headphone into the HEADPHONE JACK (JK2) (4) Connect the test point TP5 in series with a capacitor of 1μF to ground. (5) Connect a frequency counter to TP6. (6) Adjust SVR2 to have a reading of 18.95kHz-19.05kHz on frequency counter.

c. Instrument Connection

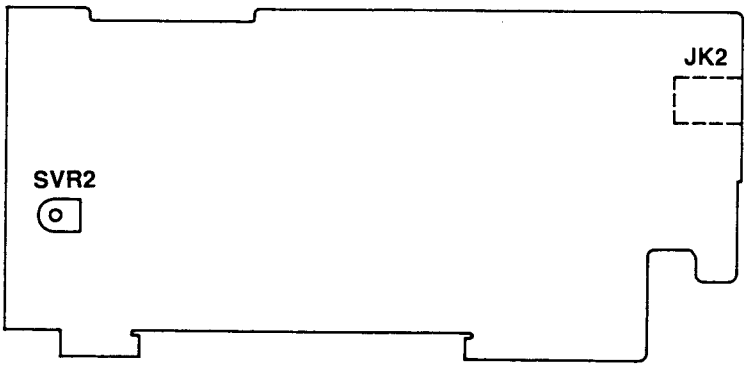

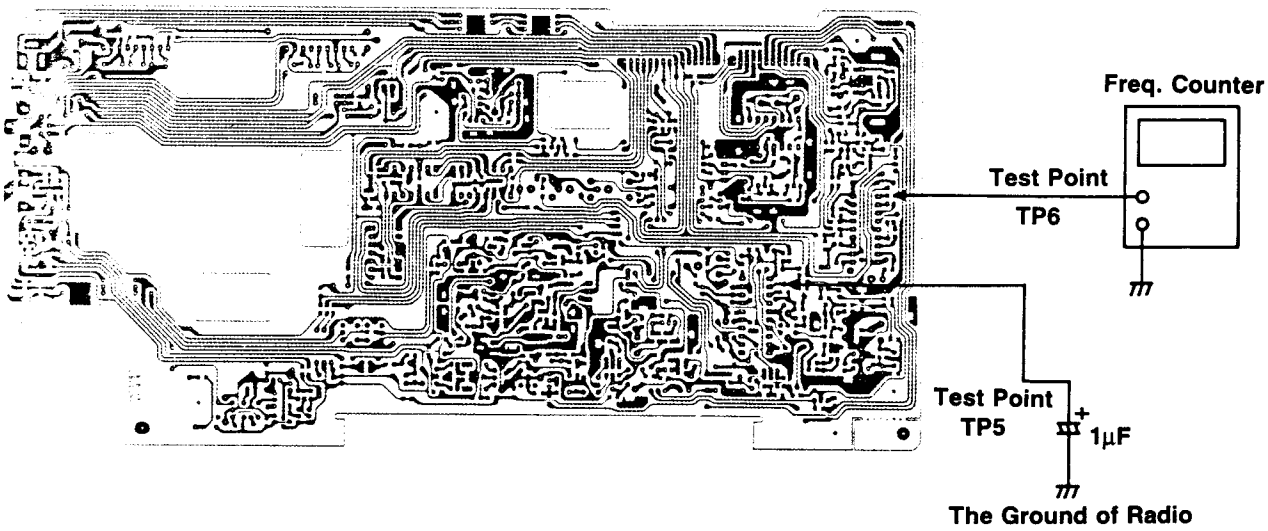

(10) ALIGNMENT FOR INDICATION LEVEL OF BATTERY

a. Required Instrument

DC Power Supply with voltage meter

b. Alignment Procedure

Adjustment	Procedure
SVR5	(1) Remove batteries away from the RADIO BATTERY compartment. (2) Connect a DC power supply to the test point TP12. (3) Set the voltage to a reading of 4.4V. (4) Turn the radio ON and adjust SVR5. (5) Push POWER key again to shut off the radio and the BATTERY LEVEL INDICATOR appears for 5 seconds. (6) Repeat (4) and (5) until the level is indicated on the 2nd. scale.

c. Instrument Connection

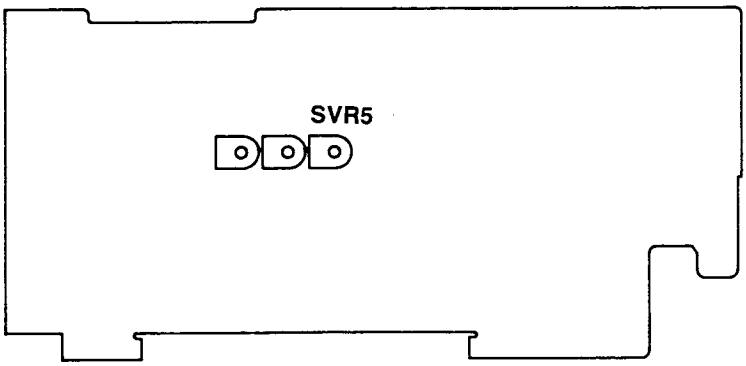

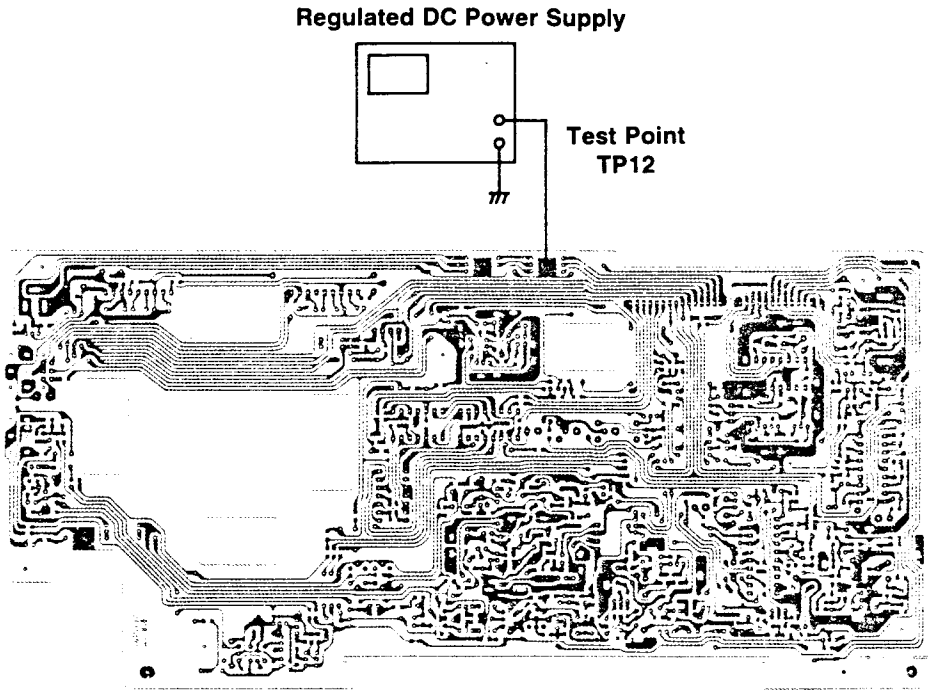

(11) **ALIGNMENT FOR SIGNAL STRENGTH LEVEL**

a. Required Instrument
FM Signal Generator
AM Signal Generator

b. Alignment Procedure

Mode	Adjustment	Procedure
FM	SVR3	(1) Turn the radio ON. (2) Connect a FM signal generator to the input terminal of Rod Ant. (TP2) (3) Set the signal generator to 98MHz with 1kHz Mod, 22.Hz deviation and 36 emf dBμ/75 ohm output level. (4) Tune the radio band frequency to 98MHz and adjust SVR3 to have a strength level reading of 6th scale.
AM	SVR4	(1) Turn the radio ON. (2) Set the bandwidth switch to WIDE and RF GAIN VR to MAX position. (3) Tune the radio band frequency to 15.100MHz. (4) Feed a signal with 30% modulation and 36 emf dBμ/50 ohm output level into the AM EXT. ANT. Jack. (5) Tune the generator frequency exactly the same as that of the radio frequency displayed (6) Adjust SVR4 to have a strength level reading of 5th scale.

Caution : Before these signal strength alignment procedures, the SVR5 (for Battery level) should be in correct position.

c. Instrument Connection

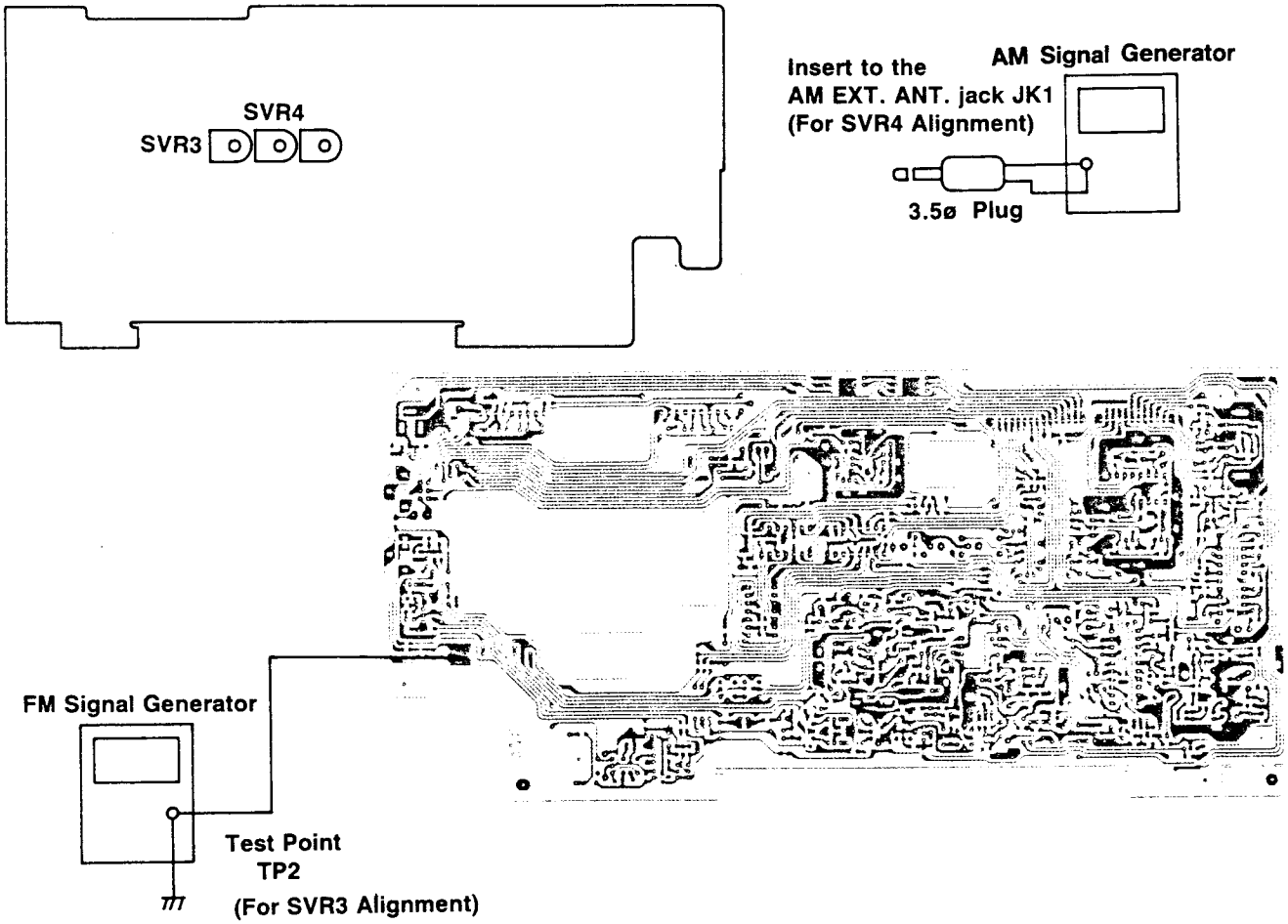

(12) ALIGNMENT FOR 450kHz TRAP

a. Required Instruments

AM Signal Generator
Loop Antenna
SSVM

b. Alignment Procedure

Mode	Adjustment	Procedure
AM	T8	(1) Turn the radio ON. (2) Set the bandwidth switch to WIDE and RF GAIN VR ro MAX position. (3) Tune the radio band frequency to 450kHz. (4) Connect a AM signal generator together with standard loop dummmy antenna and feed a stronger signal to the MW/LW ferrite bar antenna. (5) Tune the generator frequency to 450kHz and set modulation depth to 30%~50% (6) Connect a SSVM to speaker (TP14). (7) Adjust T8 to have a min. audio output.

c. Instrument Connection

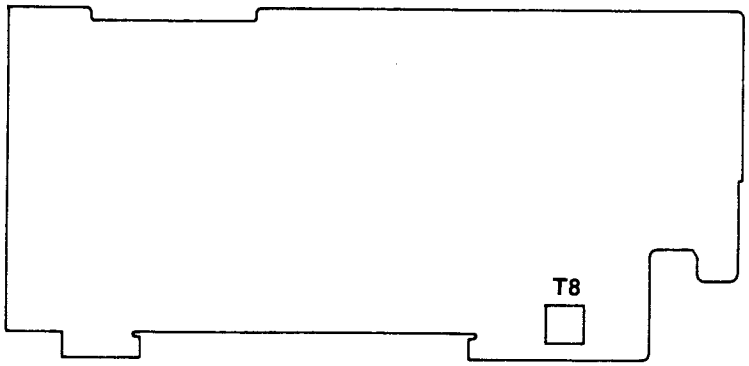

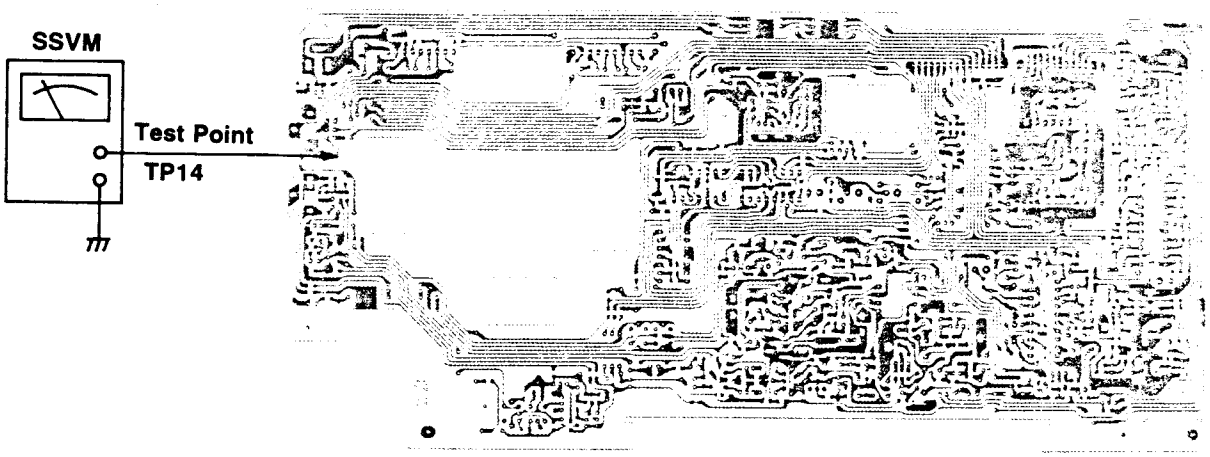

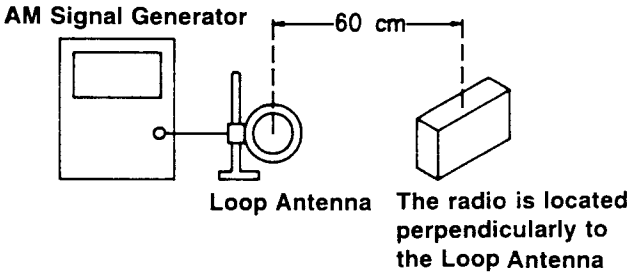

(13) **ALIGNMENT FOR FM STATION DETECTION**

a. Required Instruments
FM Signal Generator
Voltage Meter

b. Alignment Procedure

Mode	Adjustment	Procedure
FM	SVR1	(1) Turn the radio ON. (2) Connect a voltage meter between pin (8) and pin (17) of IC1 TA7758P. (3) Connect a FM signal generator to the input terminal of Rod Ant. (TP2). (4) Set the signal generator to 98MHz with 1kHz Mod. 22.5kHz deviation and 66 emf dBμ/75 ohm output level. (5) Tune the radio band frequency to 98MHz and adjust SVR1 until the voltage difference between pin(8) and pin (17) is less than 0.3 Volt.

c. Instrument Connection

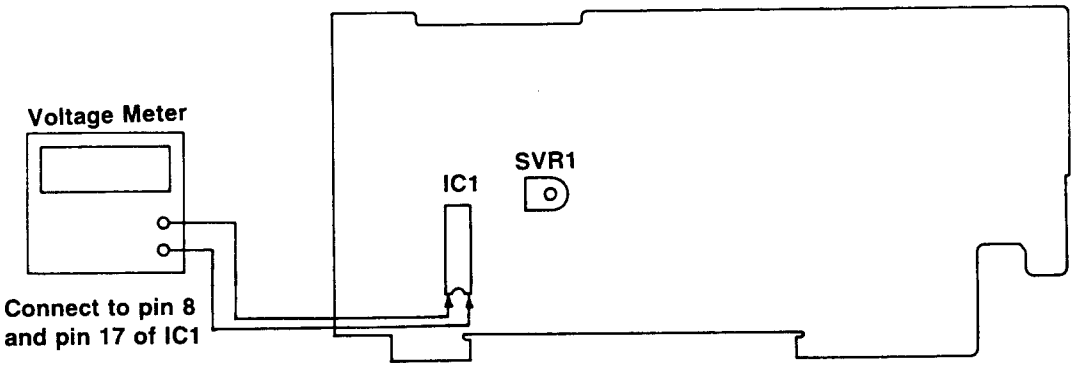

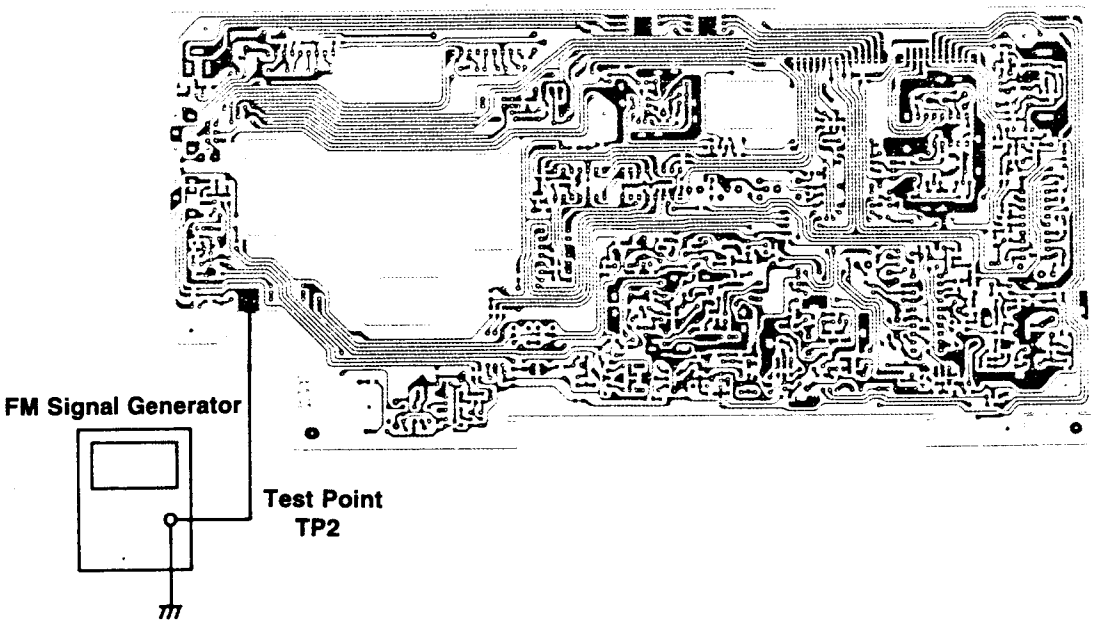

TROUBLESHOOTING FLOW CHART

(1) Weak sensitivity on FM mode

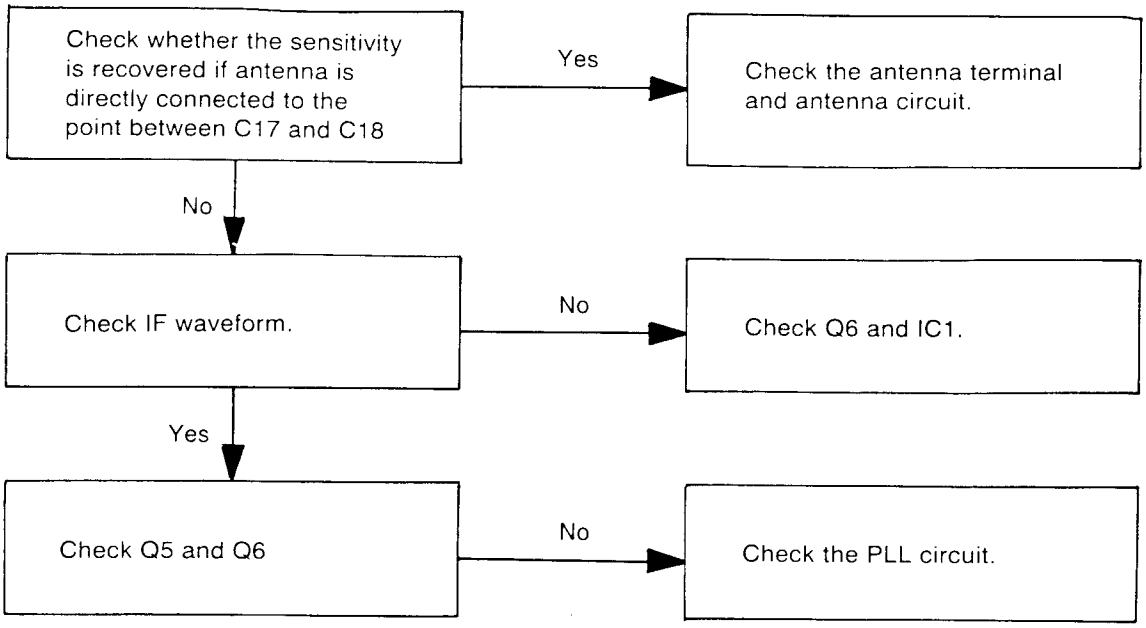

(2) Weak sensitivity in AM band

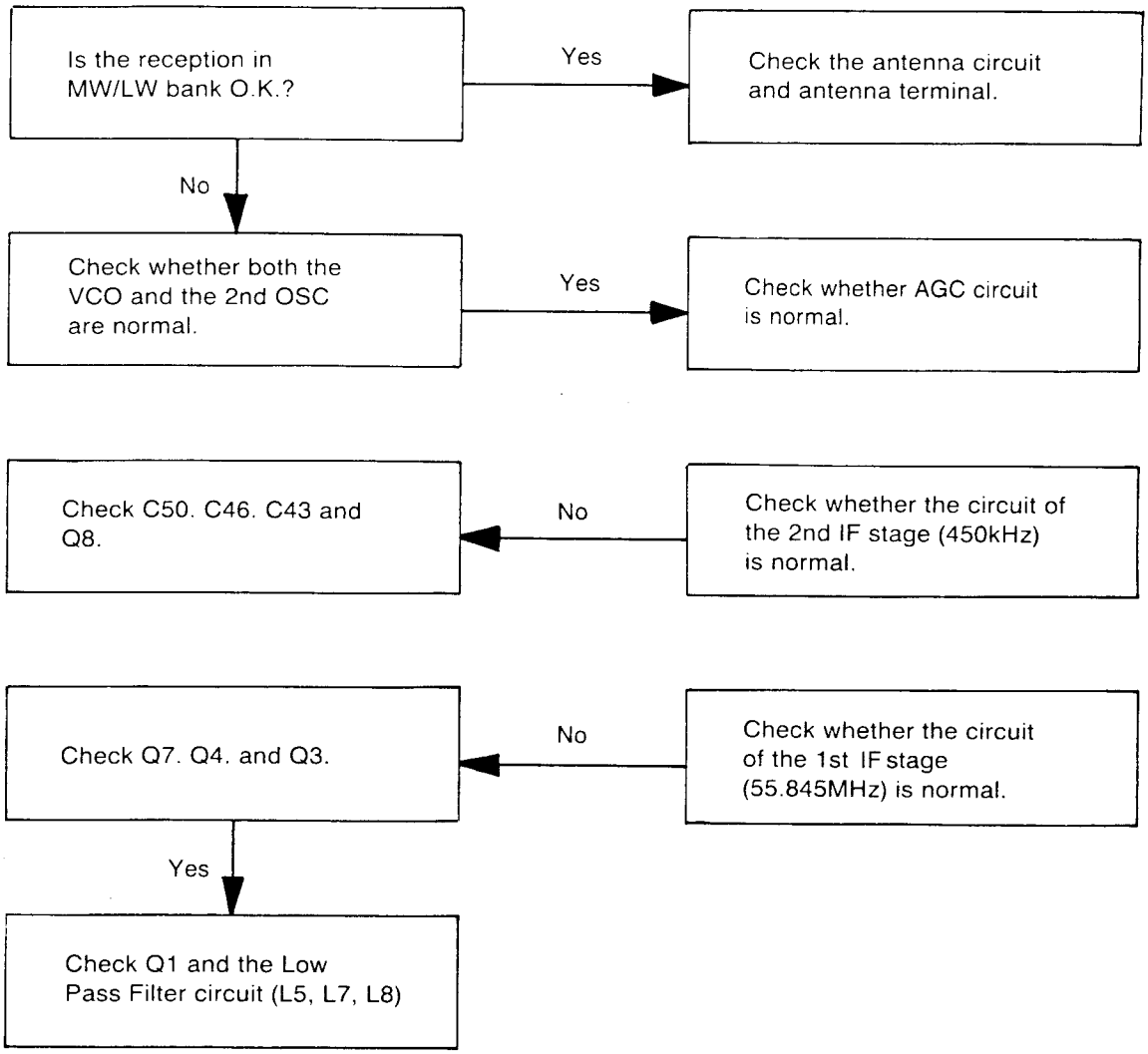

(3) PLL does not work

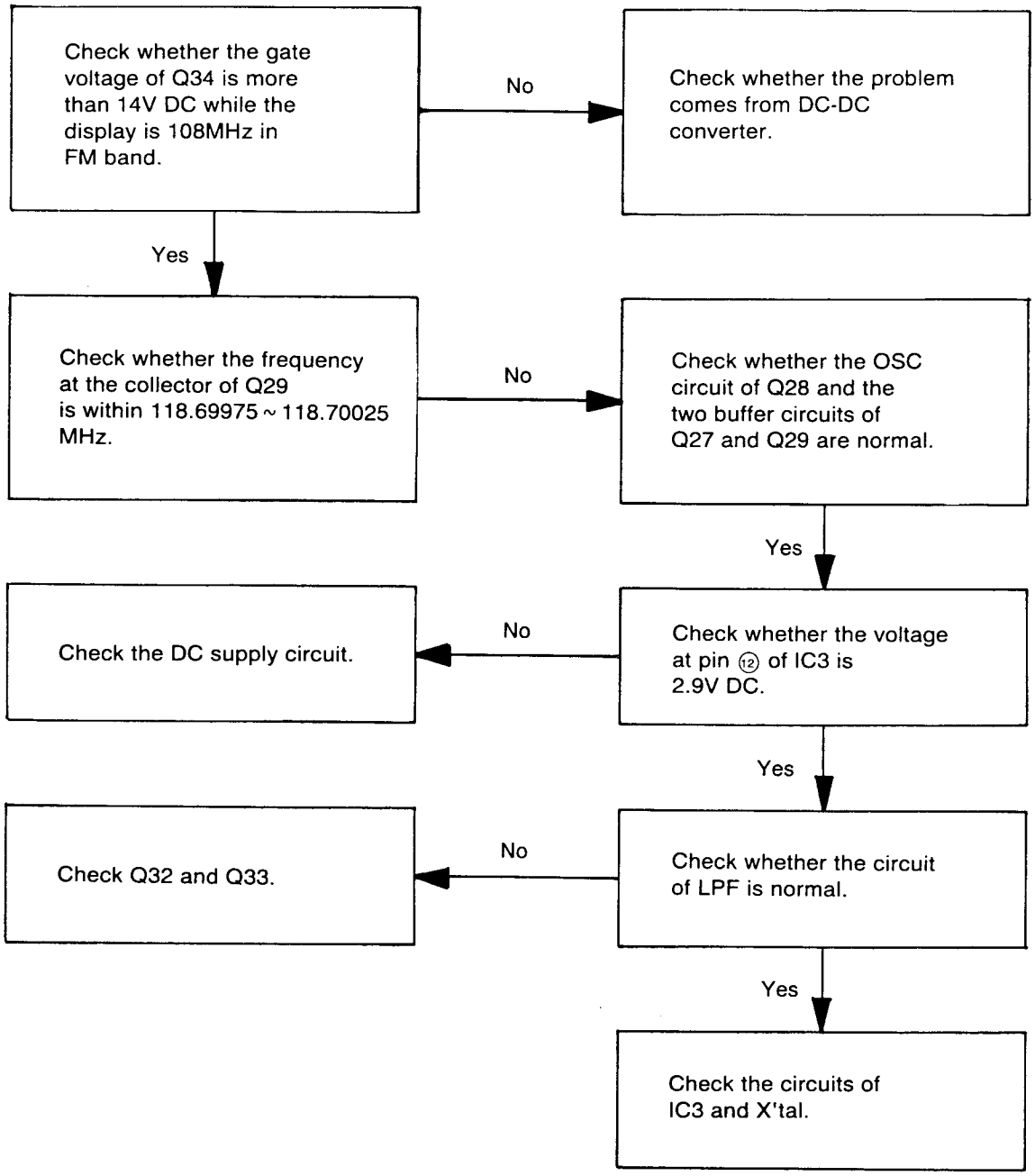

(4) Power cannot be turned on

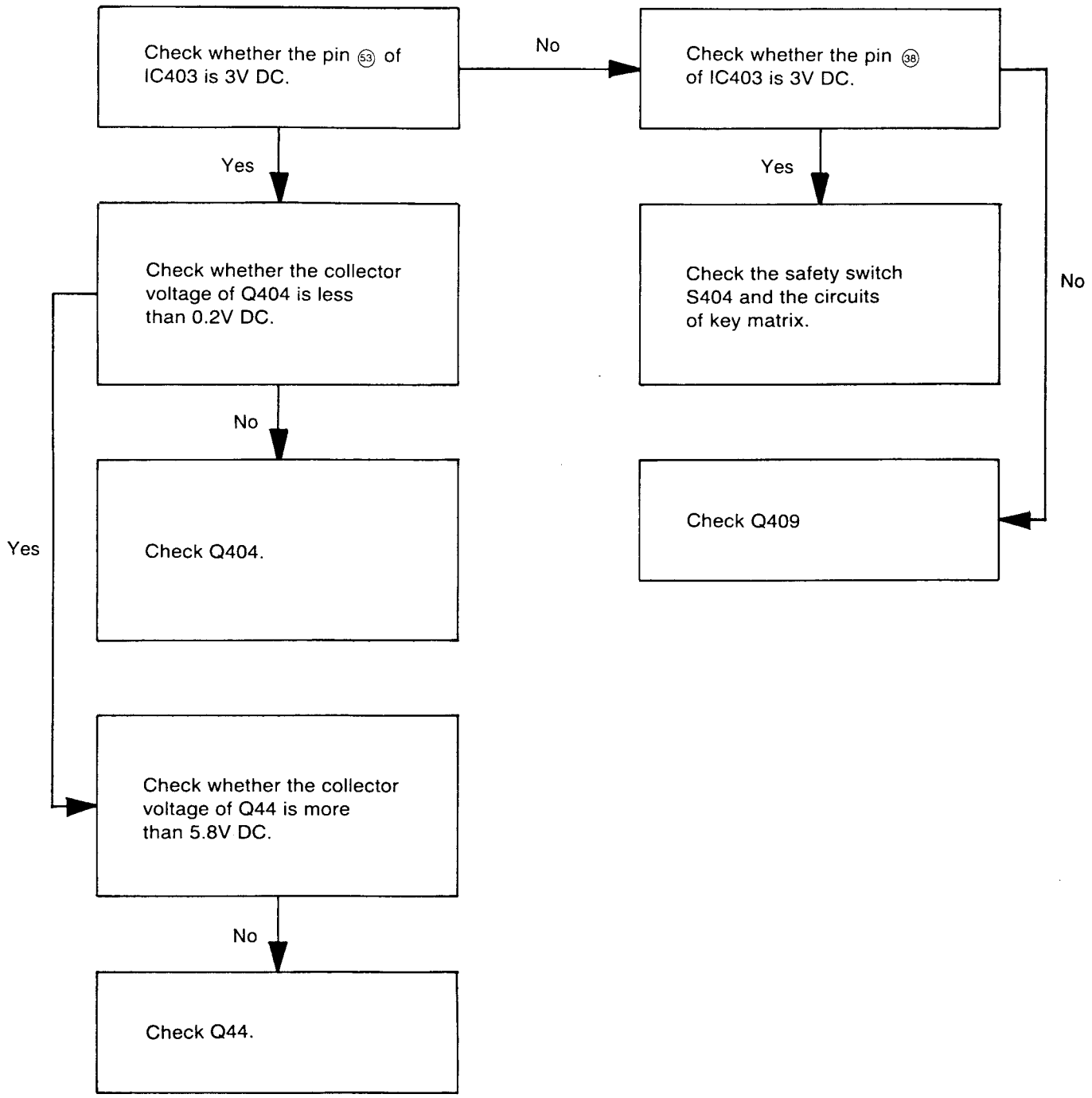

WIRING DIAGRAM

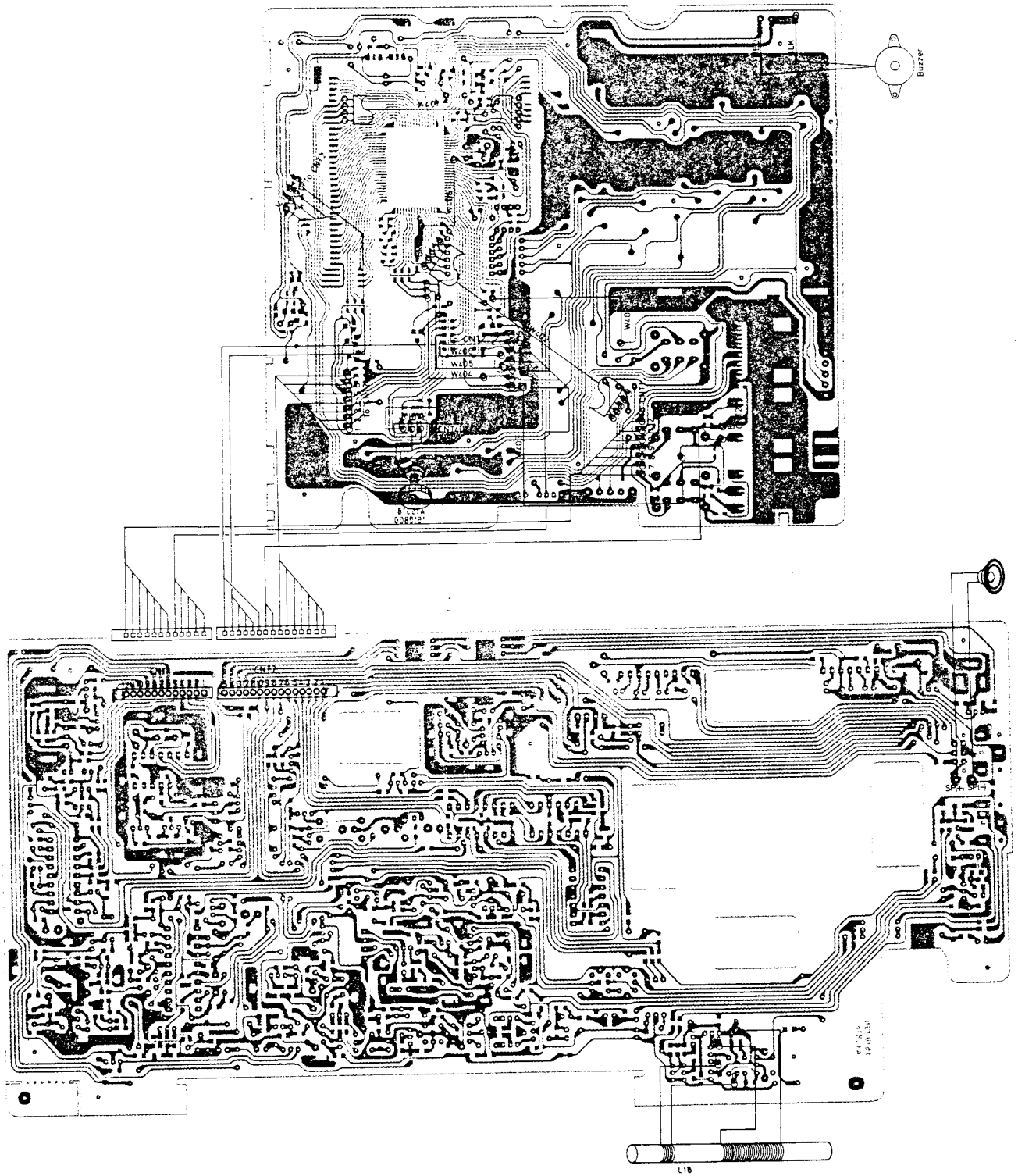

MAIN PCB CHIP SIDE

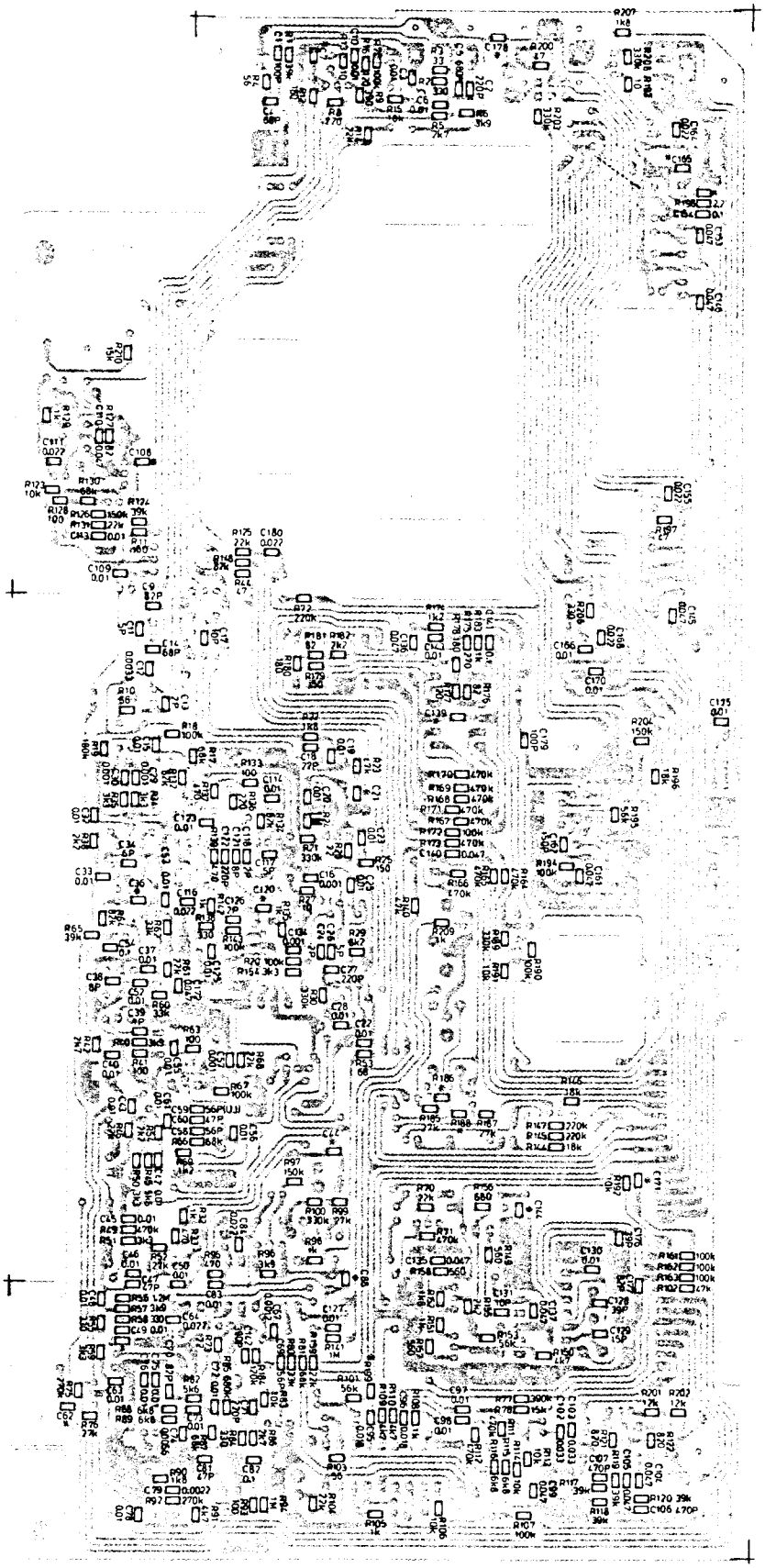

MAIN PCB TOP VIEW

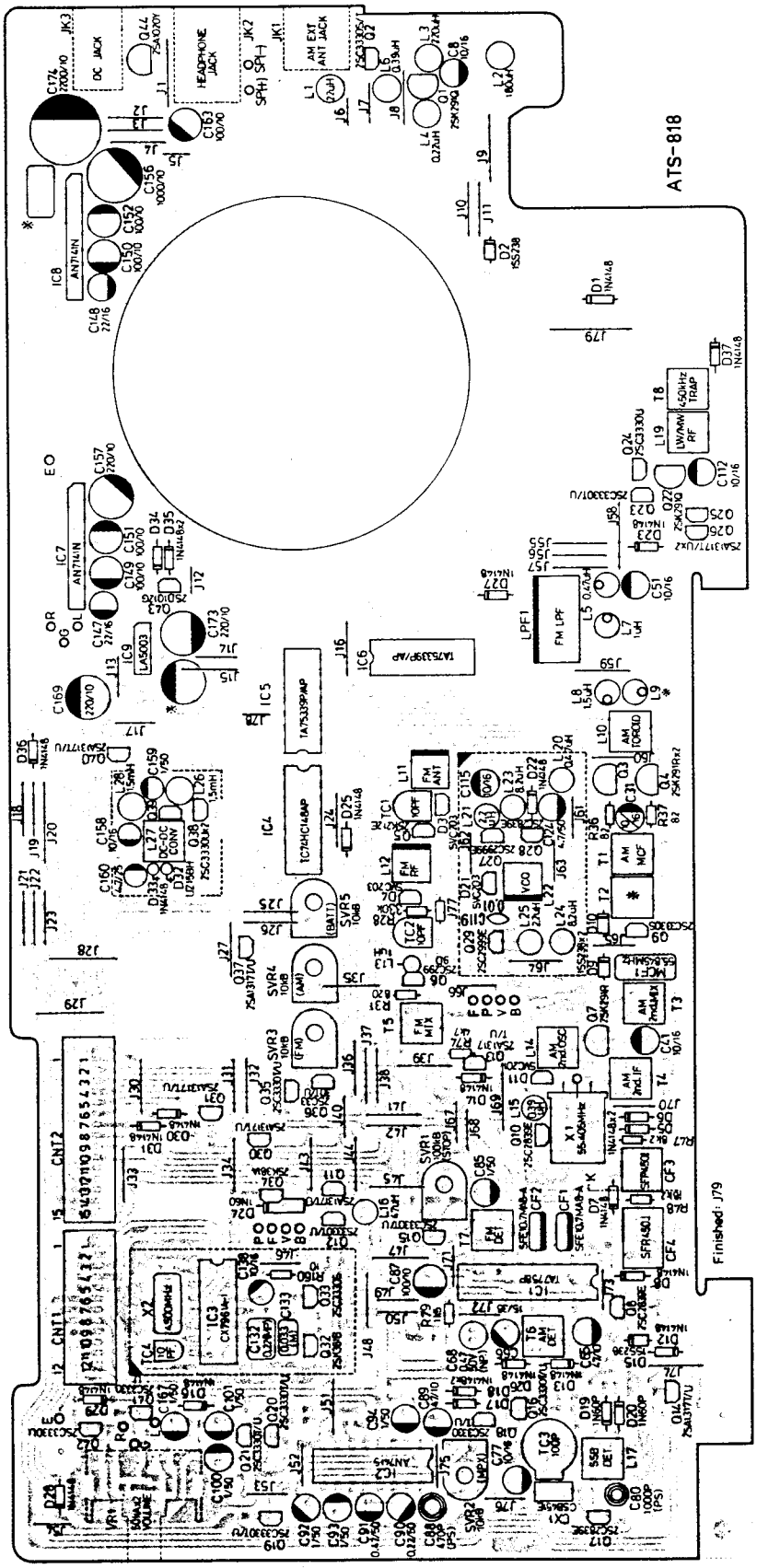

CONTROL PCB CHIP SIDE

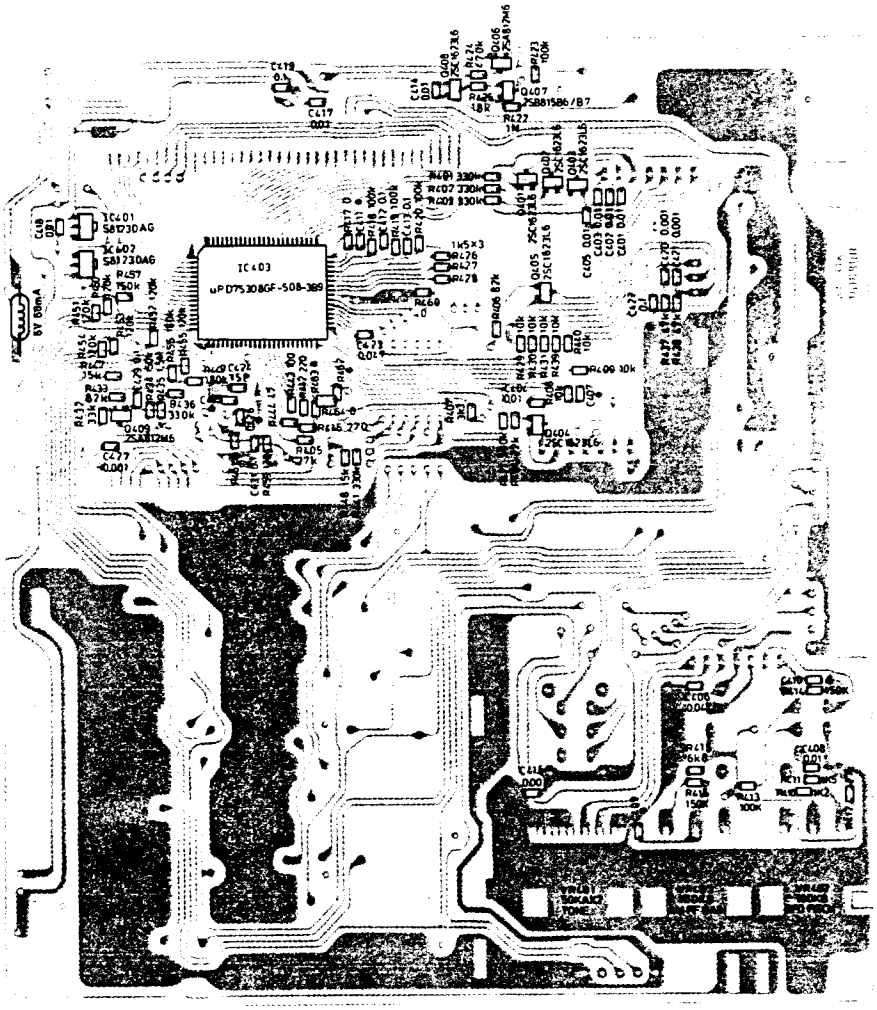

CONTROL PCB TOP VIEW

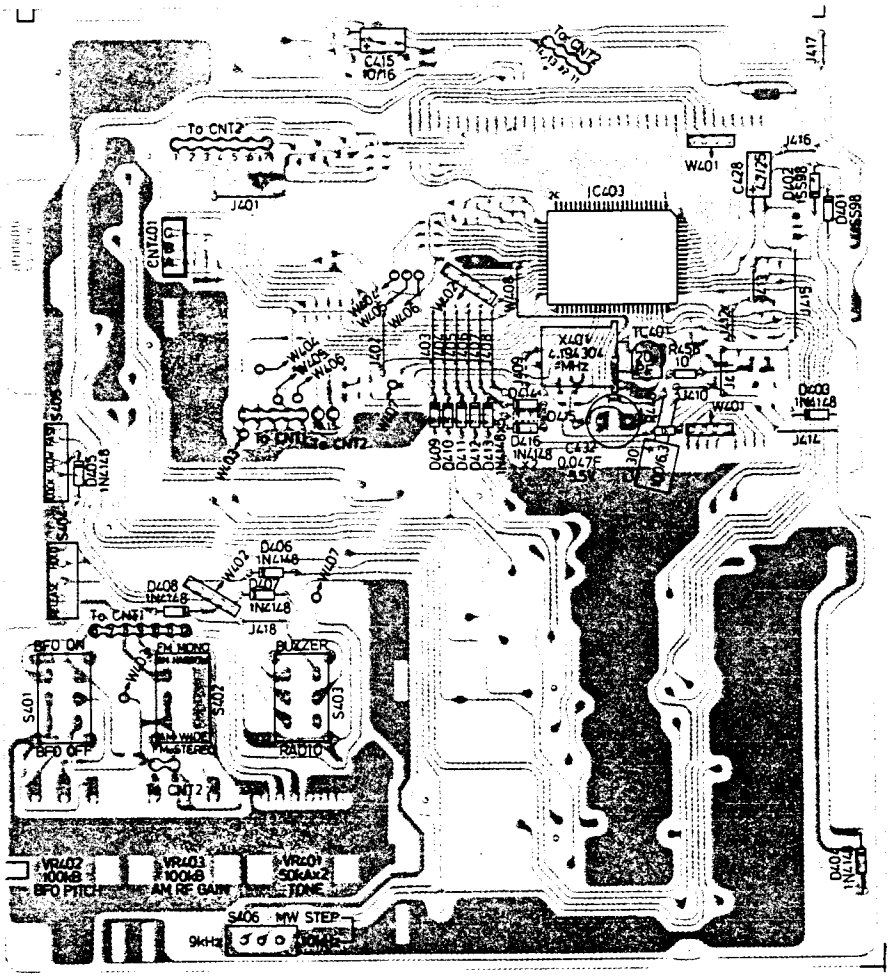

ELECTRICAL PARTS LIST

Ref. No.	Description					RS Part No.	Mfr. Part No.
	PCB-A Ass'y (Main Board)						06016602
	PCB-A Blank						1610790
CAPACITORS (All Chip Type. CeramicType-A 2.0 x 1.25 m/m,Type-B 3.2 x 1.6 m/m Unless Noted Otherwise)							
C1		100pF	50V	± 5%	NPO-A		4010101
C2		220pF	50V	± 5%	NPO-A		4022101
C3		0.01μF	25V	± 10%	X7R-A		4010367
C4		68pF	50V	± 5%	NPO-A		4068001
C5		680pF	50V	± 5%	SL-A		4068119
C6		0.01μF	25V	± 10%	X7R-A		4010367
C7	Not Used						
C8	Elect.	10μF	16V	± 20%	5x11		4410632
C9		82pF	50V	± 5%	NPO-A		4082001
C10		0.01μF	25V	± 10%	X7R-A		4010367
C11		5pF	50V	± 0.25p	NPO-A		4005001
C12		0.0033μF	50V	± 10%	X7R-A		4033261
C13		2pF	50V	± 0.25p	NPO-A		4002001
C14		68pF	50V	± 5%	NPO-A		4068001
C15		0.01μF	25V	± 10%	X7R-A		4010367
C16		0.001μF	50V	± 5%	SL-A		4010219
C17		10pF	50V	± 0.5%	NPO-A		4010002
C18		22pF	50V	± 5%	NPO-A		4022001
C19		0.01μF	25V	± 10%	X7R-A		4010367
C20		0.01μF	25V	± 10%	X7R-A		4010367
C21	Not Used						
C22		0.01μF	25V	± 10%	X7R-A		4010367
C23		0.01μF	25V	± 10%	X7R-A		4010367
C24		2pF	50V	± 0.25p	NPO-A		4002001
C25		0.01μF	25V	± 10%	X7R-A		4010367
C26		5pF	50V	± 0.25p	NPO-A		4005001
C27		220pF	50V	± 5%	NPO-A		4022101
C28		0.01μF	25V	± 10%	X7R-A		4010367
C29		0.001μF	50V	± 5%	SL-A		4010219
C30		0.001μF	50V	± 5%	SL-A		4010219
C31	Elect.	10μF	16V	± 20%	5x11		4410632
C32		0.01μF	25V	± 10%	X7R-A		4010367
C33		0.01μF	25V	± 10%	X7R-A		4010367
C34		6pF	50V	± 0.5p	NPO-A		4006002
C35	Not Used						
C36	Not Used						
C37		0.01μF	25V	± 10%	X7R-A		4010367
C38		8pF	50V	± 0.5p	NPO-A		4008002
C39		1pF	50V	± 0.25p	NPO-A		4001001
C40		0.01μF	25V	± 10%	X7R-A		4010367
C41	Elect.	10μF	16V	± 20%	5x11		4410632
C42		0.01μF	25V	± 10%	X7R-A		4010367
C43		0.01μF	25V	± 10%	X7R-A		4010367
C44	Not Used						
C45		0.01μF	25V	± 10%	X7R-A		4010367
C46		0.01μF	25V	± 10%	X7R-A		4010367
C47		47pF	50V	± 5%	NPO-A		4047001
C48		0.01μF	25V	± 10%	X7R-A		4010367
C49		0.01μF	25V	± 10%	X7R-A		4010367
C50		0.01μF	25V	± 10%	X7R-A		4010367
C51	Elect.	10μF	16V	± 20%	5x11		4410632
C52		0.01μF	25V	± 10%	X7R-A		4010367
C53		0.01μF	25V	± 10%	X7R-A		4010367
C54		0.1μF	25V	+80%-20%	Y5V-A		4010471
C55		0.01μF	25V	± 10%	X7R-A		4010367

Ref. No.	Description					RS Part No.	Mfr. Part No.
C56		0.01μF	25V	± 10%	X7R-A		4010367
C57		0.001μF	50V	± 5%	SL-A		4010219
C58		56pF	50V	± 5%	NPO-A		4056001
C59		56pF	50V	± 5%	UJ-A		4056016
C60		47pF	50V	± 5%	NPO-A		4047001
C61		0.01μF	25V	± 10%	X7R-A		4010367
C62		0.001μF	50V	± 5%	SL-A		4010219
C63		0.01μF	25V	± 10%	X7R-A		4010367
C64		0.022μF	25V	± 20%	X7R-A		4022368
C65	Elect.	47μF	10V	± 20%	5x11		4447620
C66	Elect.	15μF	35V	± 20%	5x11		4415650
C67		0.0012μF	50V	± 10%	X7R-A		4012261
C68	Non-Polar C.	0.47μF	50V	± 20%	5x11		4447464
C69		56pF	50V	± 5%	NPO-A		4056001
C70		82pF	50V	± 5%	NPO-A		4082001
C71		220pF	50V	± 5%	NPO-A		4022101
C72		0.01μF	25V	± 10%	X7R-A		4010367
C73		0.01μF	25V	± 10%	X7R-A		4010367
C74		0.0056μF	50V	± 10%	X7R-A		4056261
C75		0.01μF	25V	± 10%	X7R-A		4010367
C76		0.01μF	25V	± 10%	X7R-A		4010367
C77	Elect.	10μF	16V	± 20%	5x11		4410632
C78		0.01μF	25V	± 10%	X7R-A		4010367
C79		0.0022μF	50V	± 10%	X7R-A		4022261
C80	PS	0.001μF	50V	± 5%			4501020
C81		47pF	50V	± 5%	NPO-A		4047001
C82		0.1μF	25V	+80%-20%	Y5V-A		4010471
C83		0.01μF	25V	± 10%	X7R-A		4010367
C84		0.022μF	25V	± 20%	X7R-A		4022368
C85	Elect.	1μF	50V	± 20%	5x11		4410561
C86	Not Used						
C87	Elect.	100μF	10V	± 20%	6.3x11.2		4410772
C88	PS	470pF	50V	± 5%			4504710
C89	Elect.	47μF	10V	± 20%	5x11		4447620
C90	Elect.	0.22μF	50V	± 20%	5x11		4422460
C91	Elect.	0.47μF	50V	± 20%	5x11		4447461
C92	Elect.	1μF	50V	± 20%	5x11		4410561
C93	Elect.	1μF	50V	± 20%	5x11		4410561
C94	Elect.	1μF	50V	± 20%	5x11		4410561
C95		0.018μF	25V	± 10%	X7R-A		4018367
C96		0.018μF	25V	± 10%	X7R-A		4018367
C97		0.01μF	25V	± 10%	X7R-A		4010367
C98		0.01μF	25V	± 10%	X7R-A		4010367
C99		0.047μF	25V	+80%-20%	Y5V-A		4047371
C100	Elect.	1μF	50V	± 20%	5x11		4410561
C101	Elect.	1μF	50V	± 20%	5x11		4410561
C102		0.033μF	25V	± 20%	X7R-A		4033368
C103		0.033μF	25V	± 20%	X7R-A		4033368
C104		0.047μF	50V	± 20%	Z5U-A		4047363
C105		0.047μF	50V	± 20%	Z5U-A		4047363
C106		470pF	50V	± 5%	NPO-A		4047101
C107		470pF	50V	± 5%	NPO-A		4047101
C108	Not Used						
C109		0.01μF	25V	± 10%	X7R-A		4010367
C110		0.047μF	25V	+80%-20%	Y5V-A		4047371
C111		0.022μF	25V	± 20%	X7R-A		4022368
C112	Elect.	10μF	16V	± 20%	5x11		4410632
C113		0.01μF	25V	± 10%	X7R-A		4010367

Ref. No.	Description					RS Part No.	Mfr. Part No.
C114		0.01μF	25V	± 10%	X7R-A		4010367
C115	Elect.	10μF	16V	± 20%	5x11		4410632
C116		0.022μF	25V	± 20%	X7R-A		4022368
C117							
C118		47pF	50V	± 0.25p	NPO-A		4002001
C119		0.01μF	50V	± 10%	X7R-A		4033261
C120	Not Used						
C121		8pF	50V	± 0.5p	NPO-A		4008002
C122		220pF	50V	± 5%	NPO-A		4022101
C123		0.01μF	25V	± 10%	X7R-A		4010367
C124	Elect.	4.7μF	50V	± 20%	5x11		4447562
C125		0.01μF	25V	± 10%	X7R-A		4010367
C126		2pF	50V	± 0.25p	NPO-A		4002001
C127		0.01μF	25V	± 10%	X7R-A		4010367
C128		39pF	50V	± 5%	NPO-A		4039001
C129		15pF	50V	± 5%	NPO-A		4015001
C130		0.01μF	25V	± 10%	X7R-A		4010367
C131		10pF	50V	± 0.5p	NPO-A		4010002
C132	Metal.Poly	0.22μF	50V	± 5%			4822460
C133	*Mylar®	0.033μF	50V	± 5%			4633360
C134		0.001μF	50V	± 5%	SL-A		4010219
C135		0.047μF	25V	+80%-20%	Y5V-A		4047371
C136		0.047μF	25V	+80%-20%	Y5V-A		4047371
C137		0.047μF	25V	+80%-20%	Y5V-A		4047371
C138	Elect.	10μF	16V	± 20%	5x11		4410632
C139	Not Used						
C140		0.047μF	25V	+80%-20%	Y5V-A		4047371
C141		0.1μF	25V	+80%-20%	Y5V-A		4010471
C142		390pF	50V	± 5%	NPO-A		4039101
C143		0.01μF	25V	± 10%	X7R-A		4010367
C144	Not Used						
C145		0.047μF	50V	± 20%	Z5U-A		4047363
C146		0.047μF	50V	± 20%	Z5U-A		4047363
C147	Elect.	22μF	16V	± 20%	5x11		4422630
C148	Elect.	22μF	16V	± 20%	5x11		4422630
C149	Elect.	100μF	10V	± 20%	6.3x11.2		4410722
C150	Elect.	100μF	10V	± 20%	6.3x11.2		4410722
C151	Elect.	100μF	10V	± 20%	6.3x11.2		4410722
C152	Elect.	100μF	10V	± 20%	6.3x11.2		4410722
C153		0.047μF	25V	+80%-20%	Y5V-A		4047371
C154		0.1μF	25V	+80%-20%	Y5V-A		4010471
C155		0.022μF	25V	± 20%	X7R-A		4022368
C156	Elect.	1000μF	10V	± 20%	10x16		4410820
C157	Elect.	220μF	10V	± 20%	8x11.2		4422720
C158	Elect.	10μF	16V	± 20%	4x7		4410631
C159	Elect.	1μF	50V	± 20%	4x7		4410560
C160	Elect.	4.7μF	50V	± 20%	4x7		4447540
C161		0.047μF	25V	+80%-20%	Y5V-A		4047371
C162		150μF	50V	± 5%	NPO-A		4015101
C163	Elect.	100μF	10V	± 20%	6.3X11.2		4410722
C164		0.022pF	25V	± 20%	X7R-A		4022368
C165	Not Used						
C166		0.01μF	25V	± 10%	X7R-A		4010367
C167	Elect.	1μF	50V	± 20%	5x11		4410561
C168		0.022μF	25V	± 20%	X7R-A		4022368
C169	Elect.	220μF	10V	± 20%	8x11.2		4422720
C170		0.01μF	25V	± 10%	X7R-A		4010367
C171	Not Used						

Note: * Mylar® is a registered trademark of E.I. DU PONT de nemours and company.

Ref. No.	Description					RS Part No.	Mfr. Part No.
C172		0.047µF	25V	+80%-20%	Y5V-A		4047371
C173	Elect.	220µF	10V	± 20%	8x11.2		4422720
C174	Elect.	2200µF	10V	± 20%	12.5x20		4422820
C175		0.01µF	25V	± 10%	X7R-A		4010367
C176		39pF	50V	± 5%	NPO-A		4039001
C177		82pF	50V	± 5%	NPO-A		4082001
C178	Not Used						
C179		100pF	50V	± 5%	NPO-A		4010101
C180		0.022µF	25V	± 20%	X7R-A		4022368
C181		39pF	50V	± 5%	NPO-A		4039001
CONNECTORS							
CNT1	CNT. Housing 12P				(JST/JAE)		1700110
CNT2	CNT. Housing 15P				(JST/JAE)		1700120
	CNT. Wire Ass'y 12P				(JST/JAE)		1703210
	CNT. Wire Ass'y 15P				(JST/JAE)		1703220
COILS							
L1	22µH						1132900
L2	180µH						1134000
L3	220µH						1134100
L4	0.22µH						1130500
L5	0.47µH						1130900
L6	0.39µH						1130800
L7	1µH						1131300
L8	1.5µH						1131500
L9	Not Used						
L10	Toroid Coil 720µH						1150000
L11	Adj. Coil 0258-404-W038B			(FM ANT)			1122211
L12	Adj. COIL 0258-404-W039B			(FM RF)			1122220
L13	1µH						1131370
L14	Adj. Coil 0237-404-W322A			(AM OSC)			1122300
L15	0.39µH						1130800
L16	47µH						1133300
L17	Adj. Coil 0950			(SSB DET)			1120950
L18	BAR & Coil			(LW/MW ANT)			1110470
L19	10mH			(LW/MW RF)			1136100
L20	0.47µH						1130900
L21	2.2µH						1131700
L22	Adj. Coil 0258-404-W040A			(VCO)			1122440
L23	8.2µH						1132400
L24	8.2µH						1132400
L25	2.2µH						1131700
L26	1.5mH						1135100
L27	Adj. Coil 4140-404-W120A			(DC CONV)			1122290
L28	1.5mH						1135100
T1	Adj. Coil 0237-404-W525			(AM MCF I)			1122420
T2	Not Used						
T3	Adj. Coil 0237-404-W402			(AM MCF II)			1122260
T4	Ift 4140-404-W121			(AM IF)			1122270
T5	Ift 4143-404-W188			(FM MIX)			1122231
T6	Adj. Coil 0990			(AM DET)			1120990
T7	Ift 22153-404-W275			(FM DET)			1122250
T8	Ift 2150-404-W387B			(AM TRAP)			1122280
CRYSTALS							
X1	X'TAL 55.405MHz						1650020
X2	X'TAL 4.500MHz						1650030
DIODES							
D1	1N4148TR						1040020T
D2	1SS238						1042010

Ref. No.	Description		RS Part No.	Mfr. Parts No.
D3	Varactor SVC203	(AA1/AA2)		1043060
D4	Varactor SVC203	(AA1/AA2)		1043060
D5	1N4148TR			1040020T
D6	1N4148TR			1040020T
D7	1N4148TR			1040020T
D8	1N4148TR			1040020T
D9	1SS238			1042010
D10	1SS238			1042010
D11	Varactor SVC201SP			1043030
D12	1N4148TR			1040020T
D13	1N4148TR			1040020T
D14	1N4148TR			1040020T
D15	1SS238			1042010
D16	1N4148TR			1040020T
D17	1N4148TR			1040020T
D18	1N4148TR			1040020T
D19	1N60P			1040040
D20	1N60P			1040040
D21	Varactor SVC203	(AA1/AA2)		1043060
D22	1N4148TR			1040020T
D23	1N4148TR			1040020T
D24	1N60P			1040030
D25	1N4148TR			1040020T
D26	1N4148TR			1040020T
D27	1N4148TR			1040020T
D28	1N4148TR			1040020T
D29	1N4148TR			1040020T
D30	1N4148TR			1040020T
D31	1N4148TR			1040020T
D32	Zener UZ - 15BH			1045090
D33	1N4148			1040020
D34	1N4148TR			1040020T
D35	1N4148TR			1040020T
D36	1N4148TR			1040020T
D37	1N4148TR			1040020T
FILTERS				
LPF1	LC Filter 0247-036	(FM Lpf)		1122200
MCF1	MCF 55.845MHz			1650041
CX1	Resonator 451kHz			1650061
CF1	CF. SFE10.7MA8-A			1660080
CF2	CF. SFE10.7MA8-A			1660080
CF3	CF. SFP450I			1660170
CF4	CF. SFR450J			1660360
INTEGRATED CIRCUITS				
IC1	TA7758P	FM IF, AM MIX & IF		1010300
IC2	AN7415	AM FM IC AMP		1010030
IC3	CX7961A-1	PLL		1010401
IC4	TC74HC148AP	A/D Converter		1011230
IC5	TA75339AP/P	A/D Converter		1011400
IC6	TA75339AP/P	A/D Converter		1011400
IC7	AN7141N	Power AMP		1011350
IC8	AN7141N	Power AMP		1011350
IC9	LA5003	3V Regulator		1010140
JACKS				
JK1	HSJ0912-01-022	(Ext Ant)		1649021
JK2	HSJ0914-01-040	(Headphone)		1640060
JK3	HEC047-01-230	(DC IN)		1647000
JUMP WIRES				
J1				8000050
J2				8000040

Ref. No.	Description	RS Part No.	Mfr. Parts No.
J3	10mm 0.6ø		8000040
J4	10mm 0.6ø		8000040
J5	5mm 0.6ø		8000010
J6	5mm 0.6ø		8000010
J7	7.5mm 0.6ø		8000030
J8	10mm 0.6ø		8000040
J9	12.5mm 0.6ø		8000050
J10	10mm 0.6ø		8000040
J11	10mm 0.6ø		8000040
J12	5mm 0.6ø		8000010
J13	7.5mm 0.6ø		8000030
J14	7.5mm 0.6ø		8000030
J15	10mm 0.6ø		8000040
J16	10mm 0.6ø		8000040
J17	7.5mm 0.6ø		8000030
J18	10mm 0.6ø		8000040
J19	10mm 0.6ø		8000040
J20	15mm 0.6ø		8000090
J21	10mm 0.6ø		8000040
J22	10mm 0.6ø		8000040
J23	10mm 0.6ø		8000040
J24	10mm 0.6ø		8000040
J25	10mm 0.6ø		8000040
J26	10mm 0.6ø		8000040
J27	10mm 0.6ø		8000040
J28	12.5mm 0.6ø		8000050
J29	12.5mm 0.6ø		8000050
J30	10mm 0.6ø		8000040
J31	10mm 0.6ø		8000040
J32	10mm 0.6ø		8000040
J33	10mm 0.6ø		8000040
J34	10mm 0.6ø		8000040
J35	10mm 0.6ø		8000040
J36	10mm 0.6ø		8000040
J37	10mm 0.6ø		8000040
J38	10mm 0.6ø		8000040
J39	10mm 0.6ø		8000040
J40	7.5mm 0.6ø		8000030
J41	10mm 0.6ø		8000040
J42	10mm 0.6ø		8000040
J43	10mm 0.6ø		8000040
J44	10mm 0.6ø		8000040
J45	10mm 0.6ø		8000040
J46	7.5mm 0.6ø		8000030
J47	10mm 0.6ø		8000040
J48	10mm 0.6ø		8000040
J49	7.5mm 0.6ø		8000030
J50	7.5mm 0.6ø		8000030
J51	10mm 0.6ø		8000040
J52	7.5mm 0.6ø		8000030
J53	7.5mm 0.6ø		8000030
J54	7.5mm 0.6ø		8000030
J55	10mm 0.6ø		8000040
J56	10mm 0.6ø		8000040
J57	10mm 0.6ø		8000040
J58	12.5mm 0.6ø		8000050
J59	10mm 0.6ø		8000040
J60	7.5mm 0.6ø		8000030
J61	7.5mm 0.6ø		8000030
J62	7.5mm 0.6ø		8000030

Ref. No.	Description	RS Part No.	Mfr. Parts No.
J63	7.5mm 0.6ø		8000030
J64	10mm 0.6ø		8000040
J65	7.5mm 0.6ø		8000030
J66	7.5mm 0.6ø		8000030
J67	7.5mm 0.6ø		8000030
J68	7.5mm 0.6ø		8000030
J69	10mm 0.6ø		8000040
J70	7.5mm 0.6ø		8000030
J71	7.5mm 0.6ø		8000030
J72	7.5mm 0.6ø		8000030
J73	7.5mm 0.6ø		8000030
J74	10mm 0.6ø		8000040
J75	7.5mm 0.6ø		8000030
J76	7.5mm 0.6ø		8000030
J77	5mm 0.6ø		8000010
J78	5mm 0.6ø		8000010
J79	15mm 0.6ø		8000090
	SP. Frame-GND 25mm 0.6ø		8000140
	PCB A GND-GND 25mm 0.6ø		8000140
	X1-GND 25mm 0.6ø		8000140
PVC JUMPER WIRES			
PCB A (K)	45(9+9)mm Grn (AWG28 1095)		8170565
PCB A (P)	90(9+9)mm Blk (AWG28 1095)		8171460
PCB A (F)	90(9+9)mm Grn (AWG28 1095) VCO		8171465
PCB A (V)	90(9+9)mm Wht (AWG28 1095) VT		8171469
PCB A (G)	180(9+9)mm Blk (AWG28 1095) AUDIO		8173260
PCB A (R)	180(9+9)mm Brn (AWG28 1095) AUDIO		8173261
PCB A (L)	180(9+9)mm Gry (AWG28 1095) AUDIO		8173268
Speaker (+)	120(3+6)mm Grn (AWG28 1095)		8172025
Speaker (-)	120(3+6)mm Wht (AWG28 1095)		8172029
Back-Up	110(9+9)mm Wht (AWG26 1095)m. Batt(-) -M.Batt(-)		8171869
	150(9+9)mm Red (AWG26 1095)m. Batt(+) -Batt.Contact(+)		8132662
	160(9+9)mm Blk (AWG26 1095)m. Batt(+) -Batt.Contact(+)		8232860
RESISTORS	(All Carbon Film 1/10W ± 5% Chip Type A 2.0x1.25m/mType-B 3.1x1.55m/m, Unless Noted Otherwise)		
R1	39kΩ		6160155
R2	330Ω		6160130
R3	33Ω		6160118
R4	56Ω		6160121
R5	2.7kΩ		6160141
R6	3.9kΩ		6160143
R7	100kΩ		6160160
R8	220Ω		6160128
R9	390Ω		6160131
R10	56Ω		6160121
R11	150Ω		6160126
R12	180Ω		6160127
R13	10Ω		6160112
R14	22kΩ		6160152
R15	18kΩ		6160151
R16	120Ω		6160125
R17	68kΩ		6160158
R18	100kΩ		6160160
R19	180kΩ		6160163
R20	100kΩ		6160160
R21	330kΩ		6160166
R22	1.8kΩ		6160139
R23	47kΩ		6160156
R24	100kΩ		6160160
R25	150Ω		6160126

Ref. No.	Description		RS Part No.	Mfr. Parts No.
R26	22Ω			6160116
R27	10Ω			6160112
R28	RD 100kΩ	1/6W ± 5% T		6050760T
R29	8.2kΩ			6160147
R30	330kΩ			6160166
R31	RD 820Ω	1/6W ± 5% T		6050735T
R32	1kΩ			6160136
R33	470Ω			6160132
R34	3.3kΩ			6160142
R35	3.3kΩ			6160142
R36	RD 82Ω	1/6W ± 5% T		6050723T
R37	RD 82Ω	1/6W ± 5% T		6050723T
R38	2.2kΩ			6160140
R39	Not Used			
R40	3.9kΩ			6160143
R41	100Ω			6160124
R42	2.7kΩ			6160141
R43	0Ω			6160194
R44	47Ω			6160120
R45	5.6kΩ			6160145
R46	22kΩ			6160152
R47	RD 8.2kΩ	1/8W ± 5% SM5		6010547
R48	RD 8.2kΩ	1/6W ± 5% T		6050747T
R49	470Ω			6160168
R50	3.3kΩ			6160142
R51	3.3kΩ			6160142
R52	27kΩ			6160153
R53	68Ω			6160122
R54	2.2kΩ			6160140
R55	330Ω			6160130
R56	1.2MΩ			6160173
R57	3.9kΩ			6160143
R58	330Ω			6160130
R59	3.3kΩ			6160142
R60	33kΩ			6160154
R61	22kΩ			6160152
R62	33kΩ			6160154
R63	100Ω			6160124
R64	82kΩ			6160159
R65	39kΩ			6160155
R66	68kΩ			6160158
R67	100kΩ			6160160
R68	22kΩ			6160152
R69	1.2kΩ			6160137
R70	22kΩ			6160152
R71	470kΩ			6160168
R72	220kΩ			6160134
R73	22Ω			6160116
R74	RD 4.7kΩ	1/6W ± 5% T		6050744T
R75	270kΩ			6160165
R76	27kΩ			6160153
R77	390kΩ			6160167
R78	15kΩ			6160150
R79	RD 1.5kΩ	1/6W ± 5% T		6050738T
R80	33kΩ			6160154
R81	68kΩ			6160158
R82	5.6kΩ			6160145
R83	10kΩ			6160148
R84	330kΩ			6160130
R85	680kΩ			6160170

Ref. No.	Description	RS Part No.	Mfr. Parts No.
R86	2.7kΩ		6160141
R87	68kΩ		6160158
R88	6.8kΩ		6160146
R89	6.8kΩ		6160146
R90	1.8kΩ		6160139
R91	4.7kΩ		6160144
R92	270kΩ		6160165
R93	100kΩ		6160124
R94	1MΩ		6160172
R95	470Ω		6160132
R96	3.9kΩ		6160143
R97	150kΩ		6160162
R98	1kΩ		6160136
R99	27kΩ		6160153
R100	330kΩ		6160166
R101	56kΩ		6160157
R102	47kΩ		6160156
R103	56kΩ		6160121
R104	22kΩ		6160152
R105	1kΩ		6160136
R106	10kΩ		6160148
R107	100kΩ		6160160
R108	1kΩ		6160136
R109	4.7kΩ		6160144
R110	4.7kΩ		6160144
R111	470kΩ		6160168
R112	470kΩ		6160168
R113	10kΩ		6160148
R114	10kΩ		6160148
R115	6.8kΩ		6160146
R116	6.8kΩ		6160146
R117	39kΩ		6160155
R118	39kΩ		6160155
R119	39kΩ		6160155
R120	39kΩ		6160155
R121	820Ω		6160135
R122	820Ω		6160135
R123	10kΩ		6160148
R124	39kΩ		6160155
R125	22kΩ		6160152
R126	150kΩ		6160162
R127	82Ω		6160123
R128	100Ω		6160124
R129	1kΩ		6160136
R130	68kΩ		6160158
R131	22kΩ		6160152
R132	82kΩ		6160159
R133	100Ω		6160124
R134	82kΩ		6160159
R135	1kΩ		6160136
R136	220Ω		6160128
R137	470Ω		6160132
R138	330Ω		6160130
R139	470Ω		6160132
R140	47kΩ		6160156
R141	1MΩ		6160172
R142	1kΩ		6160136
R143	100kΩ		6160160
R144	18kΩ		6160151
R145	220kΩ		6160164

Ref. No.	Description		RS Part No.	Mfr. Parts No.
R146	18kΩ			6160151
R147	220kΩ			6160164
R148	82kΩ			6160159
R149	560kΩ			6160133
R150	4.7kΩ			6160144
R151	1kΩ			6160136
R152	1.8kΩ			6160139
R153	56kΩ			6160157
R154	3.3kΩ			6160142
R155	2.2kΩ			6160140
R156	680Ω			6160134
R157	560Ω			6160133
R158	560Ω			6160133
R159	22kΩ			6160152
R160	RD 10Ω	1/6W ± 5% T		6050712T
R161	100kΩ			6160160
R162	100kΩ			6160160
R163	100kΩ			6160160
R164	470kΩ			6160168
R165	470kΩ			6160168
R166	470kΩ			6160168
R167	470kΩ			6160168
R168	470kΩ			6160168
R169	470kΩ			6160168
R170	470kΩ			6160168
R171	470kΩ			6160168
R172	100kΩ			6160160
R173	470kΩ			6160168
R174	1.2kΩ			6160137
R175	270Ω			6160129
R176	82Ω			6160123
R177	120Ω			6160125
R178	180Ω			6160127
R179	150Ω			6160126
R180	180Ω			6160127
R181	82Ω			6160123
R182	2.2kΩ			6160140
R183	1kΩ			6160136
R184	120kΩ			6160161
R185	27kΩ			6160153
R186	Not Used			
R187	27kΩ			6160153
R188	Not Used			
R189	330kΩ			6160166
R190	100kΩ			6160160
R191	10kΩ			6160148
R192	10kΩ			6160148
R193	10Ω			6160112
R194	100kΩ			6160160
R195	56kΩ			6160157
R196	18kΩ			6160151
R197	47Ω			6160120
R198	2.2Ω			6160104
R199	Not Used			
R200	47Ω			6160120
R201	12kΩ			6160149
R202	12kΩ			6160149
R203	330kΩ			6160166
R204	150kΩ			6160162
R205	Not Used			

Ref. No.	Description	RS Part No.	Mfr. Parts No.
R206	330Ω		6160130
R207	1.8kΩ		6160139
R208	330kΩ		6160166
R209	1kΩ		6160136
R210	15kΩ		6160150
R211	8.2kΩ		6160147
TRANSISTORS			
Q1	FET 2SK291Q		1030060
Q2	2SC3330S		O 1022020
	2SC3330T		R 1022023
Q3	FET 2SK291R		1030061
Q4	FET 2SK291R		1030061
Q5	FET 2SK212E		1030001
Q6	2SC2999D		1020181
Q7	FET 2SK291R		1030061
Q8	2SC2839E		1022000
Q9	2SC3330S		1022020
Q10	2SC2839E		1022000
Q11	2SA1317T		O 1020273
	2SA1317U		R 1020271
Q12	2SC3330T		O 1022023
	2SC3330U		R 1022021
Q13	2SA1317T		O 1020273
	2SA1317U		R 1020271
Q14	2SA1317T		O 1020273
	2SA1317U		R 1020271
Q15	2SC3330T		O 1022023
	2SC3330U		R 1022021
Q16	2SC3330T		O 1022023
	2SC3330U		R 1022021
Q17	2SC2839E		1022000
Q18	2SC3330T		O 1022023
	2SC3330U		R 1022021
Q19	2SC3330T		O 1022023
	2SC3330U		R 1022021
Q20	2SC3330T		O 1022023
	2SC3330U		R 1022021
Q21	2SC3330T		O 1022023
	2SC3330U		R 1022021
Q22	FET 2SK291Q		1030060
Q23	2SC3330T		O 1022023
	2SC3330U		R 1022021
Q24	2SC3330U		1022021
Q25	2SA1317T		O 1020273
	2SA1317U		R 1020271
Q26	2SA1317T		O 1020273
	2SA1317U		R 1020271
Q27	2SC2999E		1020180
Q28	2SC2839E		1022000
Q29	2SC2999E		1020180
Q30	2SA1317T		O 1020273
	2SA1317U		R 1020271
Q31	2SA1317T		O 1020273
	2SA1317U		R 1020271
Q32	FET 2SK381B		1030071
Q33	2SC3330S		1022020
Q34	FET 2SK381A		1030070
Q35	2SC3330T		O 1022023
	2SC3330U		R 1022021
Q36	2SC3330T		O 1022023

Ref. No.	Description	RS Part No.	Mfr. Parts No.
	2SC3330U		R 1022021
Q37	2SA1317T		O 1020273
	2SA1317U		R 1020271
Q38	2SC3330U		1022021
Q39	2SC3330U		1022021
Q40	2SA1317T		O 1020273
	2SA1317U		R 1020271
Q41	2SC3330U		1022021
Q42	2SC3330U		1022021
Q43	2SD1012G		1023000
Q44	2SA1020Y		1020250
TRIMMERS			
TC1	10pF 222-808-23109		1210010
TC2	10pF 222-808-23109		1210010
TC3	100pF 222-808-32101		1210030
TC4	10pF VCT31C213A		1210003
VARIABLE RESISTORS			
VR1	VR 50kAx2 (RK16K12A0039-SG) (Volume)		1310130
SVR1	SVR 100kB (D) (FM Scan Stop)		1320150
SVR2	SVR 10kB (E) (MPX VCO)		1320160
SVR3	SVR 10kB (E) (FM Strength)		1320160
SVR4	SVR 10kB (E) (AM Strength)		1320160
SVR5	SVR 10kB (E) (Batt. IND)		1320160
SHIELD			
	DC/DC Shield (Up)		2149020
	DC/DC Shield (Down)		2149030
	VCO Shield (Frame)		2149040
	VCO Shield (Cover)		2149050
	1st OSC Shield (W/Mylar Sheet)		2149060
	2nd OSC Shield (W/Mylar Sheet)		2149130
	End Of PCB-A Ass'y		
	PCB-C Ass'y (Control Board)		06216602
	PCB-C Blank		1610800
CAPACITORS (All Chip Capacitor Material Ceramic Unless Noted Otherwise)			
C401	0.01μF 25V ± 10% X7R-A		4010367
C402	0.01μF 25V ± 10% X7R-A		4010367
C403	0.01μF 25V ± 10% X7R-A		4010367
C404	0.01μF 25V ± 10% X7R-A		4010367
C405	0.01μF 25V ± 10% X7R-A		4010367
C406	0.047μF 25V +80%-20% Y5V-A		4047371
C407	Not Used		
C408	0.01μF 25V ± 10% X7R-A		4010367
C409	Not Used		
C410	Not Used		
C411	Not Used		
C412	0.1μF 25V +80%-20% Y5V-A		4010471
C413	0.1μF 25V +80%-20% Y5V-A		4010471
C414	0.01μF 25V ± 10% X7R-A		4010367
C415	Elect. 10μF 16V ± 20% 4x7		4410631S
C416	0.001μF 50V ± 5% SL-A		4010219
C417	0.01μF 25V ± 10% X7R-A		4010367
C418	0.01μF 25V ± 10% X7R-A		4010367
C419	0.1μF 25V +80%-20% Y5V-A		4010471
C420	0.001μF 50V ± 5% SL-A		4010219
C421	0.001μF 50V ± 5% SL-A		4010219
C422	0.1μF 25V +80%-20% Y5V-A		4010471
C423	0.047μF 25V +80%-20% Y5V-A		4047371
C424	15pF 50V ± 5% NPO-A		4015001
C425	Not Used		
C426	Not Used		

Ref. No.	Description	RS Part No.	Mfr. Parts No.
C427	0.001µF 50V ± 5% SL-A		4010219
C428	Elect. 4.7µF 50V ± 20% 4x7		4447540
C429	0.1µF 25V +80%-20% Y5V-A		4010471
C430	Elect. 100µF 6.3V ± 20% 6x8		4410710
C431	0.1µF 25V +80%-20% Y5V-A		4010471
C432	Sup. C. 0.047µF 5.5V +80%-20%		4947300
CONNECTOR			
CNT401	CNT. Housing 3P (JST/JAE)		1702000
	CNT. Wire Ass'y 15P (JST/JAE)		1703124
CRYSTAL			
X401	4.194304MHz		1650071
DIODES			
D401	1SS98-T2		1046000T
D402	1SS98-T2		1046000T
D403	1N4148TR		1040020T
D404	1N4148TR		1040020T
D405	1N4148TR		1046000T
D406	1N4148TR		1046000T
D407	1N4148TR		1040020T
D408	1N4148TR		1040020T
D409	1N4148TR		1046000T
D410	1N4148TR		1046000T
D411	1N4148TR		1040020T
D412	1N4148TR		1040020T
D413	1N4148TR		1046000T
D414	1N4148TR		1046000T
D415	Not Used		
D416	1N4148TR		1040020T
INTEGRATED CIRCUITS			
IC401	S81230AG-RB-T2 Voltage Regulator		1011360
IC402	S81230AG-RB-T2 Voltage Regulator		1011360
IC403	LSI µPD75308GF-508-3B9 Cmos Single-Chip Microcomputer		1000021
JUMP WIRES			
J401	10mm 0.6ø		8000040
J402	10mm 0.6ø		8000040
J403	12.5mm 0.6ø		8000050
J404	12.5mm 0.6ø		8000050
J405	12.5mm 0.6ø		8000050
J406	12.5mm 0.6ø		8000050
J407	12.5mm 0.6ø		8000050
J408	12.5mm 0.6ø		8000050
J409	5mm 0.6ø		8000010
J410	5mm 0.6ø		8000010
R446	5mm 0.6ø		8000010
J411	7.5mm 0.6ø		8000030
J412	5mm 0.6ø		8000010
J413	5mm 0.6ø		8000010
J414	10mm 0.6ø		8000040
J415	15mm 0.6ø		8000090
J416	5mm 0.6ø		
J417	5mm 0.6ø		
J418	7.5mm 0.6ø		8000030
LAMPS			
	3.2ø x 13 6V 60mA		1680020
LCD			1600120
PVC JUMPER WIRES			
W401	4 Wire 70 (6+6) P=2.0 GRY		8725350
W402	5 Wire 90 (6+6) P=2.0 GRY		8650010
W403	80 (9+9) WHT (AWG28 1095)		8171269
W404	60 (9+9) RED (AWG28 1095)		8170862

Ref. No.	Description	RS Part No.	Mfr. Parts No.
W405	60 (9 + 9) ORN (AWG28 1095)		8170863
W406	60 (9 + 9) YEL (AWG28 1095)		8170864
W407	60 (9 + 9) GRY (AWG28 1095)		8170868
W408	55 (9 + 9) GRN (AWG28 1095)		8170765
RESISTORS	(All Carbon Film 1/10W ± 5% Chip Type A, Unless Noted Otherwise)		
R401	330kΩ		6160166
R402	330kΩ		6160166
R403	330kΩ		6160166
R404	22kΩ		6160152
R405	27kΩ		6160153
R406	82kΩ		6160159
R407	3.3kΩ		6160142
R408	10kΩ		6160148
R409	10kΩ		6160148
R410	1.2kΩ		6160137
R411	1.5kΩ		6160138
R412	27kΩ		6160153
R413	100kΩ		6160160
R414	150kΩ		6160162
R415	6.8kΩ		6160146
R416	150kΩ		6160162
R417	0Ω		6160194
R418	100kΩ		6160160
R419	100kΩ		6160160
R420	100kΩ		6160160
R421	560kΩ		6160169
R422	1MΩ		6160172
R423	100kΩ		6160160
R424	470kΩ		6160168
R425	18kΩ		6160151
R426	1.5kΩ		6160138
R427	1.5kΩ		6160138
R428	1.5kΩ		6160138
R429	10kΩ		6160148
R430	10kΩ		6160148
R431	10kΩ		6160148
R432	33kΩ		6160154
R433	82kΩ		6160159
R434	150kΩ		6160162
R435	1.5kΩ		6160141
R436	330kΩ		6160166
R437	470kΩ		6160168
R438	470kΩ		6160168
R439	10kΩ		6160148
R440	10kΩ		6160148
R441	330kΩ		6160166
R442	220Ω		6160128
R443	100Ω		6160124
R444	47Ω		6160120
R445	270Ω		6160129
R446	Not Used		
R447	15kΩ		6160150
R448	15kΩ		6160150
R449	180kΩ		6160163
R450	120kΩ		6160161
R451	120kΩ		6160161
R452	120kΩ		6160161
R453	120kΩ		6160161
R454	120kΩ		6160161
R455	120kΩ		6160161

Ref. No.	Description		RS Part No.	Mfr. Parts No.
R456	180kΩ			6160163
R457	150kΩ			6160162
R458	RD 10Ω1/8W SM5			6010512
R459	Not Used			
R460	0Ω			6160194
R461	0Ω			6160194
SWITCHES				
S401	2P2C	(BFO On/Off)		1630600
S402	2P2C	(Wide/Narrow)		1630600
S403	2P2C	(Buzz/Radio)		1630600
S404	1P2C(H)	(Hold)		1630340
S405	1P3C	(Fast/Slow/Lock)		1630620
S406	1P2C	(9K/10K)		1630010
TRANSISTORS				
Q401	2SC1623L6 (T2)			1020240
Q402	2SC1623L6 (T2)			1020240
Q403	2SC1623L6 (T2)			1020240
Q404	2SC1623L6 (T2)			1020240
Q405	2SC1623L6 (T2)			1020240
Q406	2SA812M6 (T2)			1020230
Q407	2SB815B6			O 1020210
	2SB815B7			R 1020211
Q408	2SC1623L6 (T2)			1020240
Q409	2SA812M6 (T2)			1020230
TRIMMER				
TC401	20pF 2222-808-20123			1210050
VARIABLE RESISTORS				
VR401	VR 50kA x 2/50kD x 2	(Tone)		1310020
VR402	VR 100kB	(BFO)		1310050
VR403	VR 100kB	(Gain)		1310050
	Rotary Encoder	(W/O Detent)		1730030
End Of PCB-C Ass'y				

SEMICONDUCTOR LEAD IDENTIFICATIONS

Transistors

2SK212E

2SC2839E
2SD1012G
2SA1317T/U
2SC2999D/E
2SC3330S/T/U

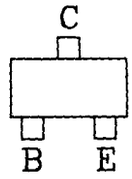

2SA812M6
2SC1623L6
2SB815B6/B7

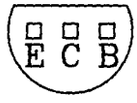

2SA1020Y

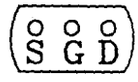

2SK381A/B

2SK291Q/R

(E: Emitter C: Collector B: Base S: Source G: Gate D: Drain)

Diodes

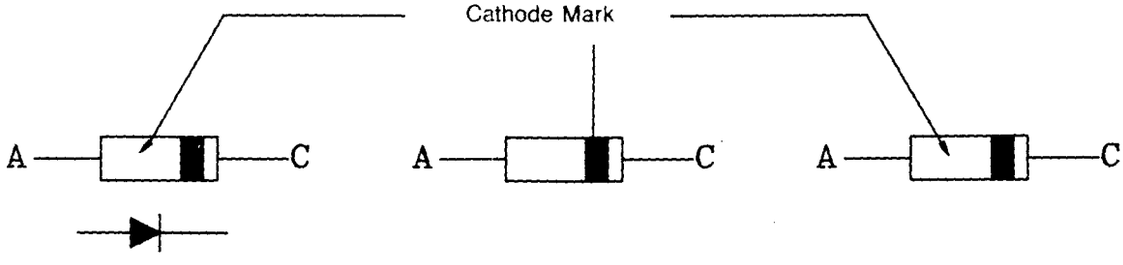

IN60 1SS238 UZ-15BH

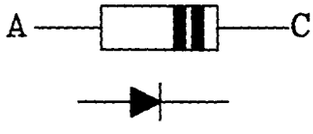

IN60P

(A: Anode C: Cathode)

EXPLODED VIEW

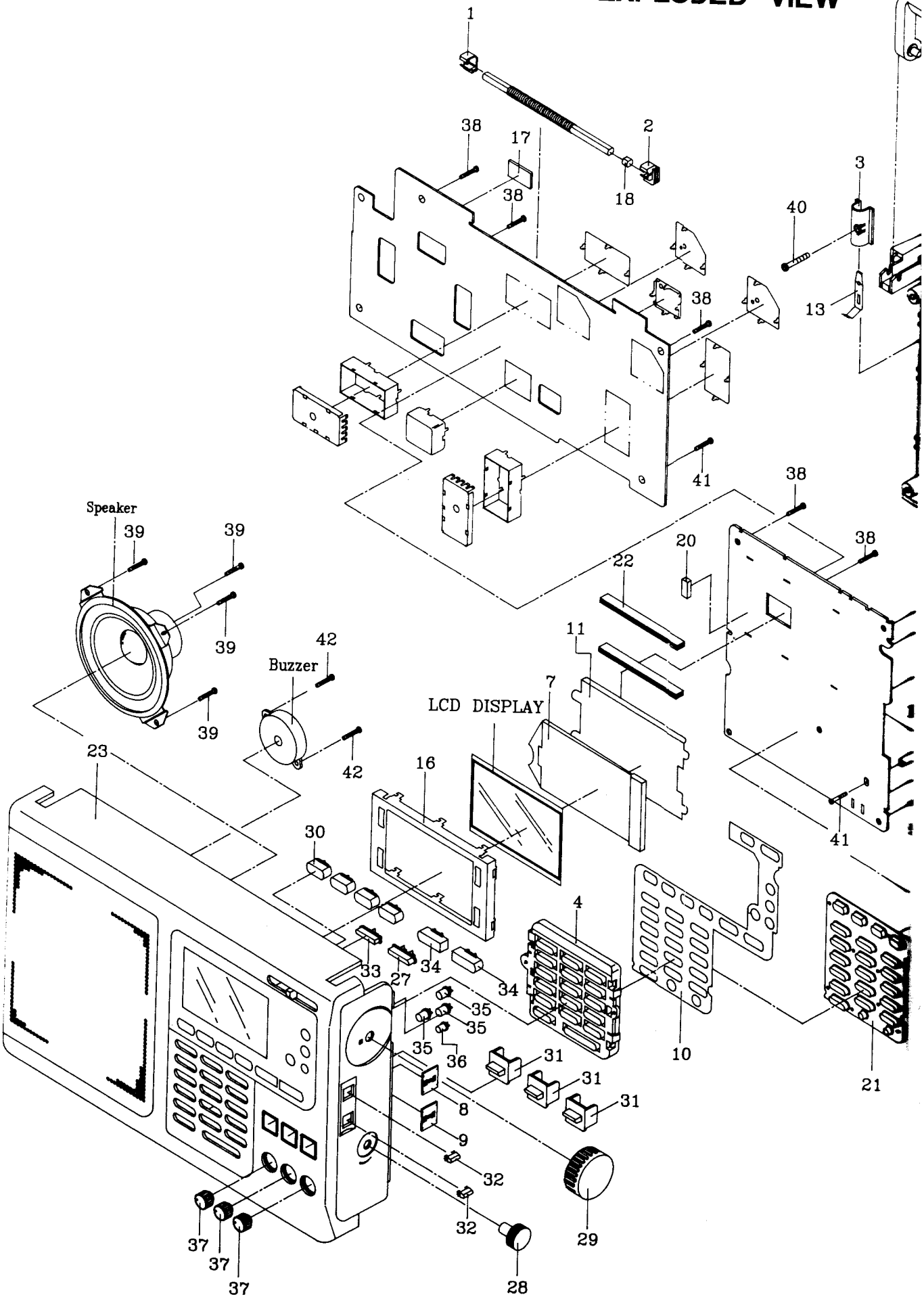

EXPLODED VIEW

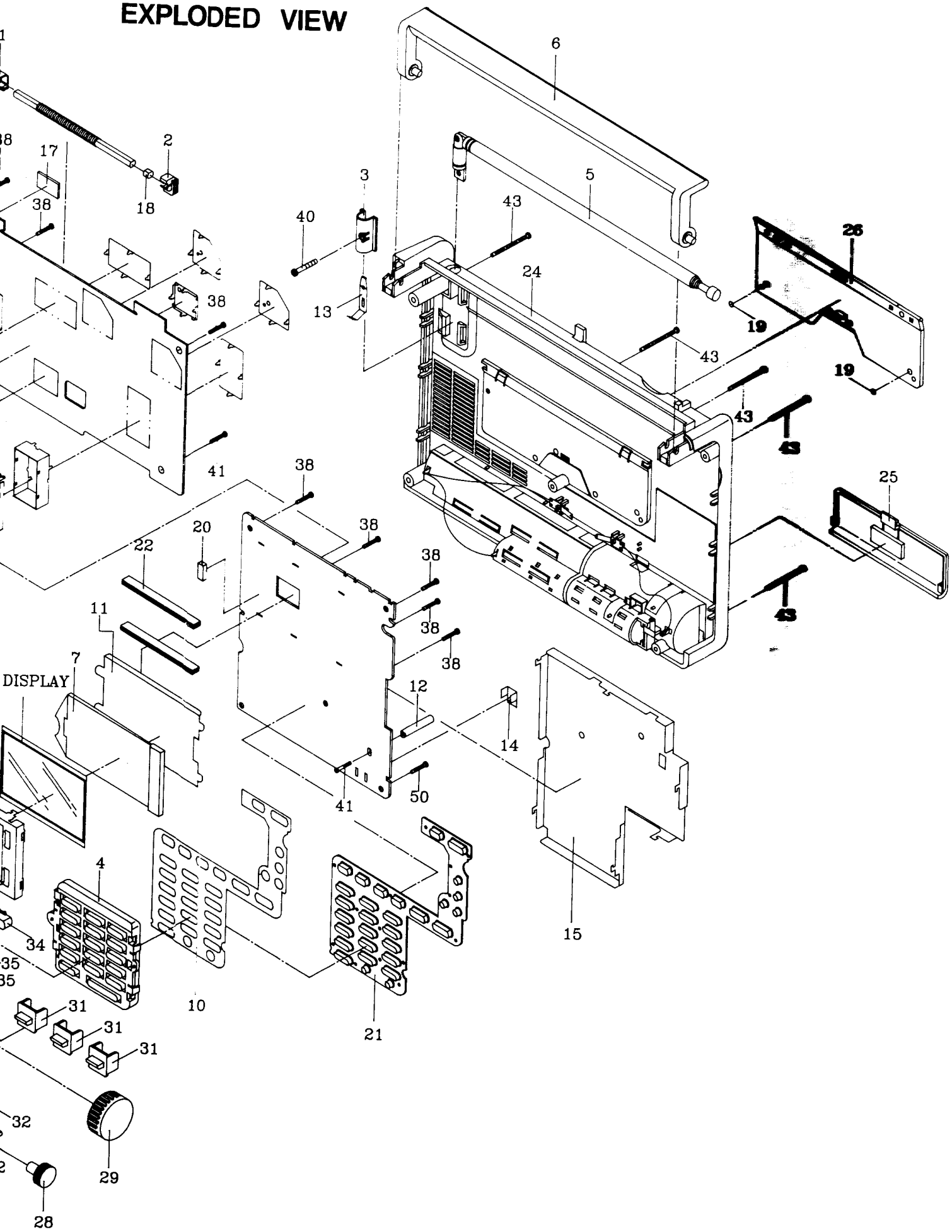

MECHANICAL PARTS LIST

Ref. No.	Description	RS Part No.	Mfr. Part No.
1	Ant. Bar Holder (L)		2018070
2	Ant. Bar Holder (R)		2018080
3	Rod Ant. Holder		2018100
4	Key Knob Panel Ass'y		07916602
	Key Knob Panel		2065010
	Key Knob Holder		2065030
	Key Knob Ass'y		3156501
	End of Key Knob Panel Ass'y		
5	Rod Ant.		3606301
6	Handle		2065050
7	LCD Illuminator		2065070
8	Slide Knob Holder (B)		2065080
9	Slide Knob Holder (A)		2065090
10	Key Board Shield		2166010
11	LCD Shield Plate		2165020
12	PCB Supporter		2165040
13	Rod Ant. Connector		2165080
14	Battery Terminal (For C-PCB)		2165090
15	Shield Plate (For C-PCB)		2165150
16	LCD Holder		2165170
17	P.C.B. Hemelon (For A-PCB)		2256000
18	Ant. Bat Fixed Sponge		2318000
19	EVA Cushion (For Back Supporter 4.5)		2365010
20	Lamp EVA Spacer		2365040
21	Key Board Rubber		2465000
22	Conductive Rubber (For LCD)		2465010
23	Front Cabinet Ass'y		06416602
	Front Cabinet		3016620
	Hemelon		2265000
	Speaker Grill		3436601
	LCD Window		3056531
	Dial Plate		3426520
	End of Front Cabinet Ass'y		
24	Back Cover Ass'y		
	(For USA)		06516602
	(For CAN/USA/AUS)		06516603
	Back Cover		3036501
	Battery Housing Case		2065000
	Battery Contact		2165060
	Battery Contact (+) (For UM-3 Battery)		2165070
	Battery Contact (+) (For UM-1 Battery)		2165140
	Ribbon (For UM-3 Battery)		2258020
	Battery Conductor (W/Spring) (For UM-3 Battery)		2104050
	Battery Contact (W/Spring) (For UM-1 Battery)		2165130
	TP Screw 2.6x8 P NI (Battery Contact)		9102082
	Ribbon (UM-1 Battery)		2265010
	PU Foot		2465030
	PVC Wire 160 (9+9)Blk(AWG26 M.Batt (–) –Batt. Contact (–)		8132860
	PVC Wire 150 (9+9)Red(AWG26 M.Bat(–) –Batt. Contac (–)		8132662
	PVC Wire 110 (9+9)Wht(AWG26 Back-Up Batt(–)–M. Batt (–)		8171869
	Rating Plate (For U.S.A.)		3406520
	(For CAN. U.K. AUS.)		3406523
	End of Back Cover Ass'y		
25	Battery Cover Ass'y		07916603
	Battery Cover		3056531
	PU Foot		2465030
	EVA Cushion		2365020
	End of Battery Cover Ass'y		
26	Back Supporter		3066520

Ref. No.	Description	RS Part No.	Mfr. Part No.
27	Power Knob		3106501
28	Volume Knob		3116501
29	Tuning Knob		3126501
30	Band Knob		3136501
31	Slide Knob (B)		3166501
32	Slide Knob (A)		3176501
33	Light Knob		3186501
34	Manual Tuning Knob		3196501
35	Time Set Knob (Sleep/Time/Dual)		3206501
36	Dual Time Knob		3216501
37	Rotary Knob		3276501
	Ext/Int Hardware Kit		07906601
38	TP Screw 2.6x8 PW NI (C-PCB x 6, A-PCB x 3)		9152082
39	TP Screw 3x8 PW NI (Speaker x 4)		9153082
40	M Screw 3x6 P NI (Rod Ant. x 1)		9003062
41	M Screw 2.6x4 PW NI (PCB Supporter x 2)		9052042
42	TP Screw 2x6 P NI (Buzzer x 2)		9101062
43	TP Screw 2.6x16 P ZK (Back Cover & Front Cabinet x 5)		9102161
	End of Hardware Kit		

IC CIRCUIT BLOCK DIAGRAM

(1) IC1-TA7758P

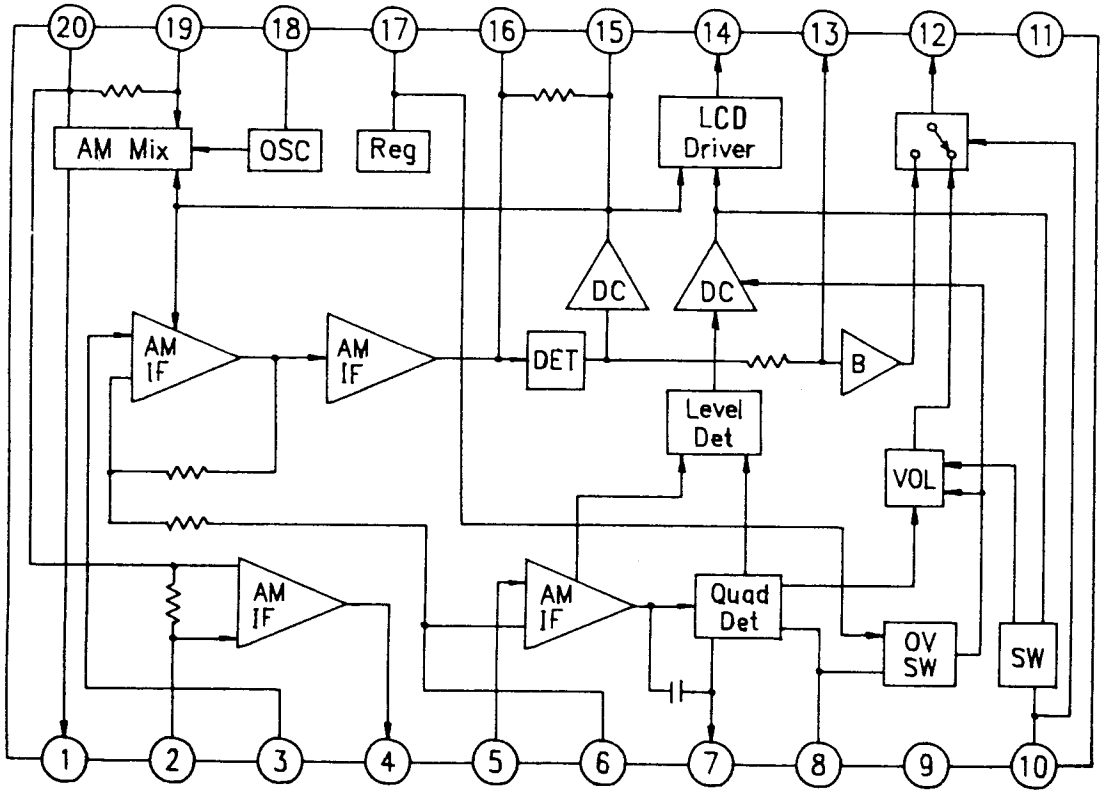

(2) IC2-AN7415

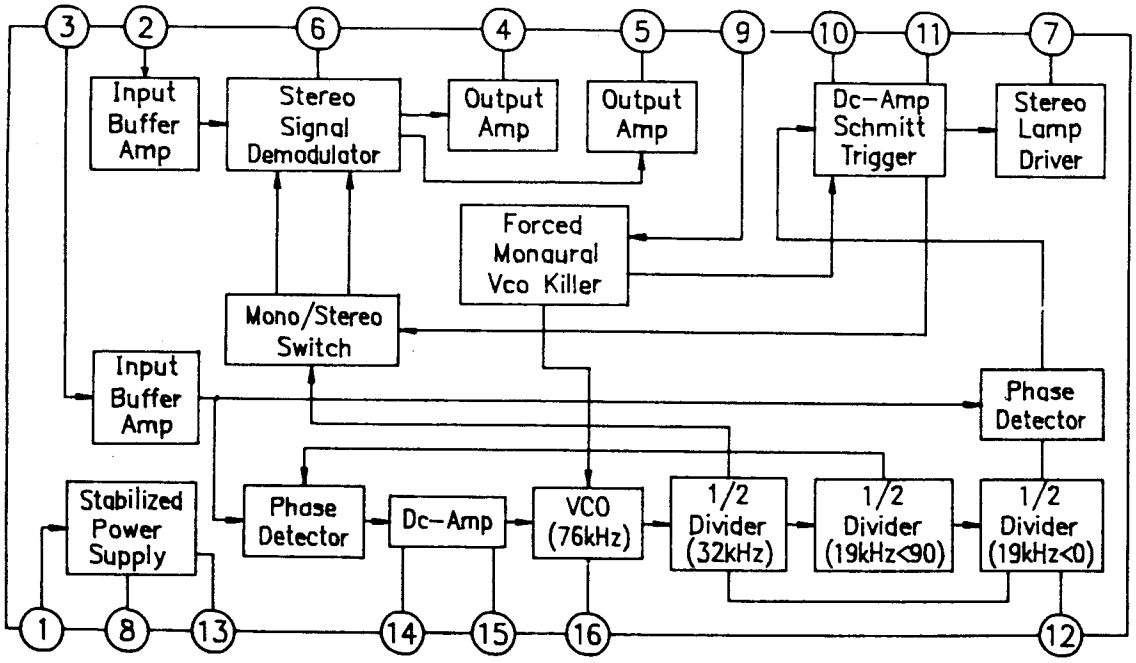

(3) IC3-CX7961A-1

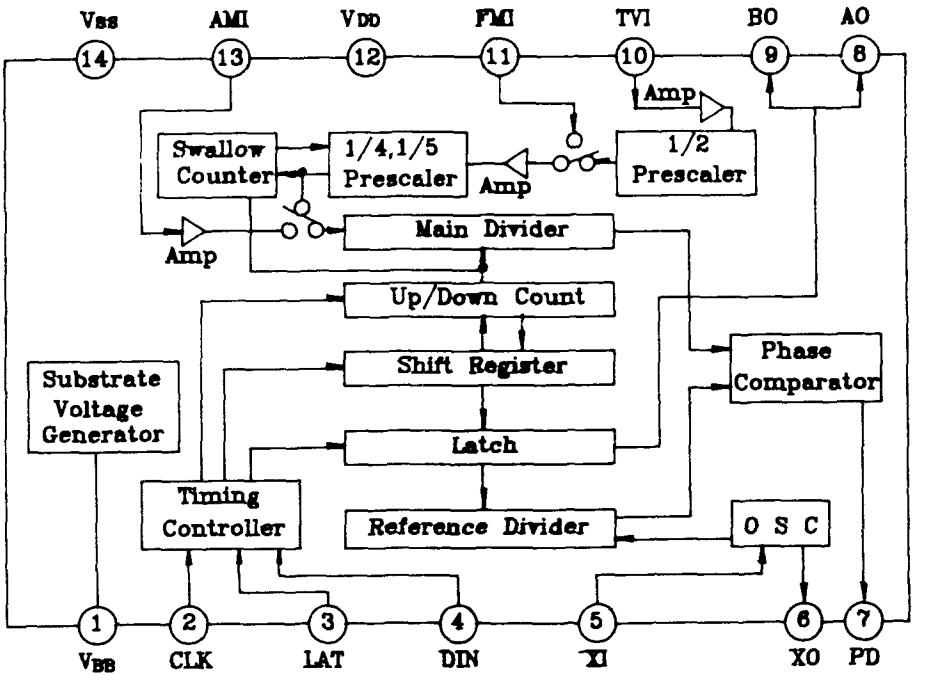

(4) IC4-TC74HC148AP

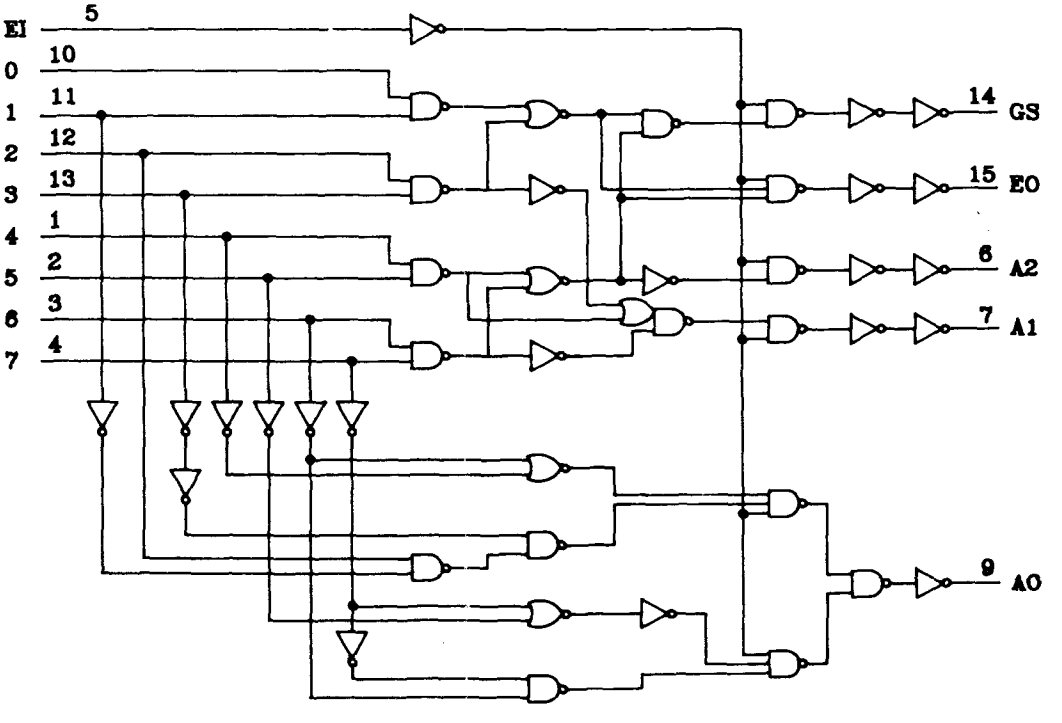

(5) IC5,6-TA75339AP/P

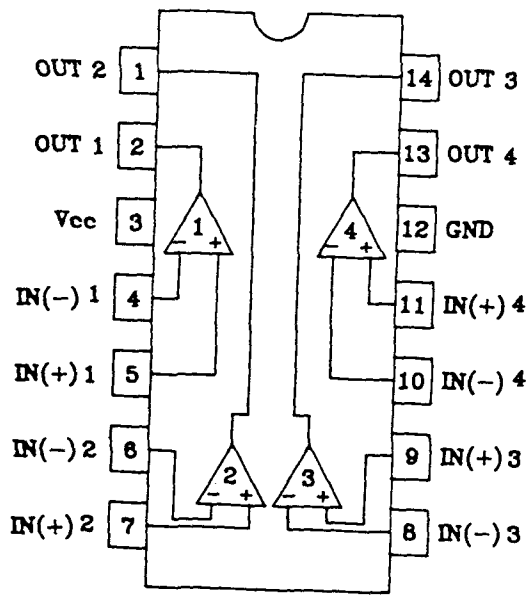

(6) IC7,8-AN7141N

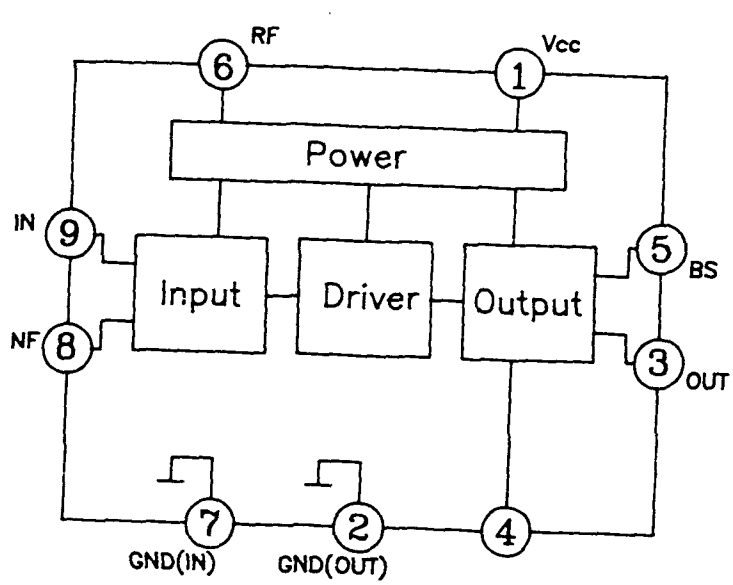

(7) IC9-LA5003

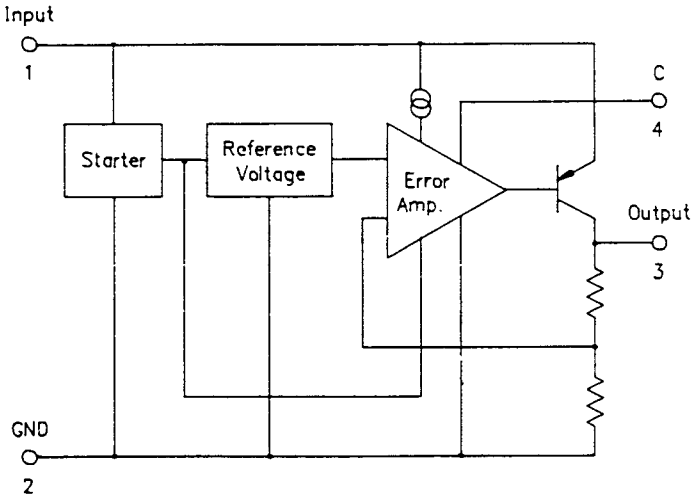

(8) IC401,402-S81230AG-RB-T2

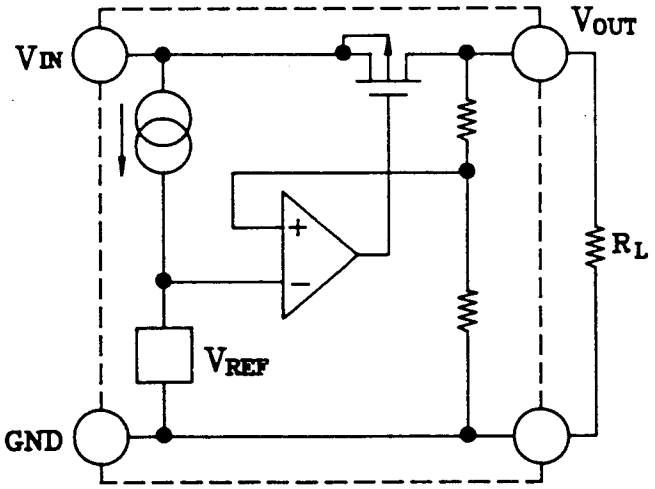

TOP VIEW

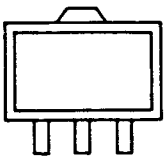

NO.	S-802	S-812
1	VOUT	GND
2	GND	VIN
3	VIN	VOUT

(9) IC403-UPD75308GF-508-3B9

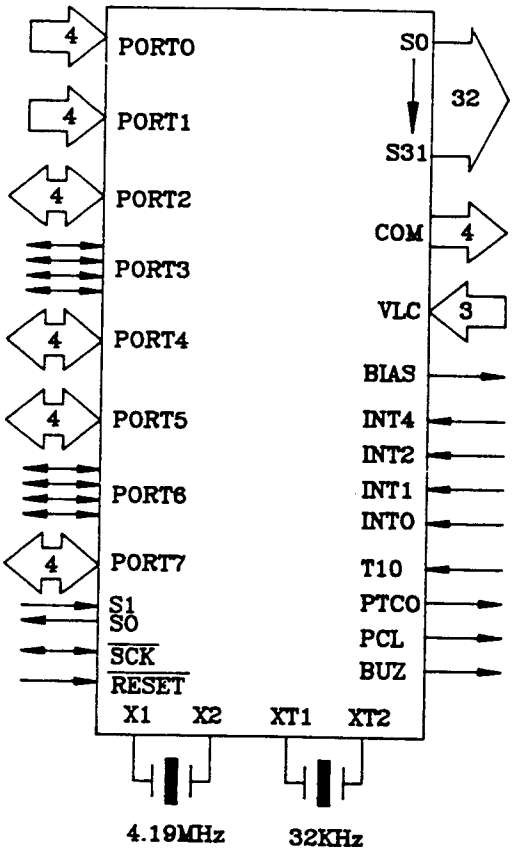

ICS' & TRANSISTORS' VOLTAGE LIST

IC1

PIN NO.	FM	AM
1	4.39	3.80
2	1.66	1.66
3	1.83	1.60
4	1.27	1.79
5	1.38	1.60
6	1.38	1.60
7	5.04	4.99
8	2.60	2.25
9	5.05	5.00
10	4.93	0
11	0	0
12	1.50	1.59
13	0	2.35
14	2.97	2.97
15	1.12	1.08
16	1.12	1.08
17	2.38	2.33
18	1.77	1.46
19	1.66	1.66
20	1.66	1.66

IC2

PIN NO.	FM	AM
1	2.86	2.86
2	0.46	0.46
3	0.46	0.46
4	0.93	0.93
5	0.93	0.93
6	0.02	0.02
7	2.99	2.99
8	0	0
9	1.04	1.04
10	0.45	0.45
11	1.17	1.17
12	1.32	1.32
13	1.43	1.43
14	1.15	1.15
15	1.15	1.15
16	0.02	0.02

IC3

PIN NO.	FM	AM
1	-1.38	-1.37
2	0	0
3	0	0
4	3.00	3.00
5	1.20	1.20
6	1.11	1.11
7	0.68	0.69
8	0.01	0.01
9	0.01	0.01
10	0	0.
11	1.40	1.39
12	2.88	2.88
13	0	0
14	0	0

TESTING CONDITION :

1. WITHOUT ANY INPUT SIGNAL AND SETTING VOLUME TO MIN.
2. SPEAKER MODE.
3. EXTERNAL ANT. IS NOT USED.
4. AM IS RECEIVED BY 150KHZ AND PUT ON THE WIDE BW, BFO OFF & AM RF GAIN IS MAX.
5. FM IS RECEIVED BY 98MHZ AND PUT ON THE STEREO POSITION.
6. LOAD IN RADIO BATTERY 6.0V AND BACK UP BATTERY 4.5V.
7. UNIT OF MEASURE : VOLTS.

IC4

PIN NO.	FM	AM
1	3.00	3.00
2	3.00	3.00
3	3.00	3.00
4	3.00	3.00
5	0	0
6	3.00	3.00
7	3.00	3.00
8	0	0
9	3.00	3.00
10	0	0
11	3.00	3.00
12	3.00	3.00
13	3.00	3.00
14	0	0
15	3.00	3.00
16	3.00	3.00

IC5

PIN NO.	FM	AM
1	3.00	3.00
2	3.00	3.00
3	3.00	3.00
4	0.75	0.70
5	1.19	1.00
6	0.75	0.70
7	1.11	0.94
8	0.75	0.70
9	1.27	1.07
10	0.75	0.70
11	1.24	1.04
12	0	0
13	3.00	3.00
14	3.00	3.00

IC6

PIN NO.	FM	AM
1	3.00	3.00
2	0	0
3	3.00	3.00
4	3.00	3.00
5	0.75	0.70
6	0.75	0.70
7	1.05	3.88
8	0.75	0.70
9	0.97	0.82
10	0.75	0.70
11	0.94	0.79
12	0	0
13	3.00	3.00
14	3.00	3.00

IC401

PIN NO.	FM	AM
1	0	0
2	4.50	4.50
3	5.85	5.85

IC402

PIN NO.	FM	AM
1	0	0
2	5.85	5.85
3	3.00	3.00

IC9

PIN NO.	FM	AM
1	5.10	5.05
2	0	0
3	3.00	3.00
4	4.35	4.30

IC7

PIN NO.	FM	AM
1	0	0
2	0	0
3	0	0
4	0	0
5	0	0
6	0	0
7	0	0
8	0	0
9	0	0

IC8

PIN NO.	FM	AM
1	5.95	5.95
2	0	0
3	3.15	3.15
4	0.62	0.62
5	0.65	0.65
6	5.90	5.90
7	0	0
8	1.33	1.33
9	0.02	0.02

IC403

PIN NO.	FM	AM
1 ~ 15	LCD SEGMENT	
16	1.57	1.57
17	3.0	0
18	0	3.0
19	0	0
20	0	0
21 ~ 24	LCD back plane	
25	3.22	3.22
26	3.22	3.22
27	2.15	2.15
28	1.08	1.08
29	3.00	3.00
30	0	0
31	0	0
32	0	0
33	0	0
34	0	0
35	0	0
36	0	0
37	2.8	2.8
38	3.05	3.05
39	3.00	3.00
40	3.00	3.00
41	3.00	3.00
42	3.00	3.00
43	3.00	3.00

IC403

PIN NO.	FM	AM
44	2.95	2.95
45	2.85	2.85
46	0	0
47	0	0
48	0	0
49	0	0
50	0	0
51	0	0
52	0	0
53	3.00	3.00
54	3.00	3.00
55	0	0
56	3.00	3.00
57	0	0
58	1.45	1.45
59	1.50	1.50
60	3.00	3.00
61	3.00	3.00
62	3.00	3.00
63	3.00	3.00
64	3.00	3.00
65	3.00	3.00
66	3.00	3.00
67	3.00	3.00
68	3.00	3.00
69~80	LED SEGMENT	

		FM	AM
Q1	S	0	0.43
	G	0	0
	D	0	3.85
Q2	E	0	0
	B	0.64	0.64
	C	0	0.01
Q3	S	0	0.92
	G	0	0
	D	0	3.55
Q4	S	0	0.92
	G	0	0
	D	0	3.55
Q5	S	0	0
	G	0	0
	D	4.02	0
Q6	E	0	0
	B	0.65	0
	C	4.00	0
Q7	S	0	0.78
	G	0	0
	D	0	4.34
Q8	E	0	0.09
	B	0	0.74
	C	0	1.95
Q9	E	0	0
	B	0.29	0.29
	C	3.00	3.00

		FM	AM
Q10	E	0	0
	B	0	0.65
	C	0	1.40
Q11	E	0	4.91
	B	0.01	4.35
	C	0	0.01
Q12	E	0	0
	B	0.56	0
	C	0.01	4.35
Q13	E	3.00	3.00
	B	4.35	2.32
	C	0	2.98

Q14	E	0	2.98	2.98
	B	0	2.98	2.32
	C	0	0	2.96
Q15	E	0	0	
	B	0.64	0	
	C	0.01	2.25	

		FM	AM	SSB/CW
Q16	E	0	0	0.11
	B	0	0	0.74
	C	0	0	2.03
Q17	E	0	0	0
	B	0	0	0.69
	C	0	0	1.75
Q18	E	0	0	0
	B	0	0	0.62
	C	3.00	3.00	0.01

		FM	AM
Q19	E	2.85	2.85
	B	3.45	3.45
	C	2.86	2.86
Q20	E	0.37	0.37
	B	1.02	1.02
	C	2.45	2.45
Q21	E	0.37	0.37
	B	1.02	1.02
	C	2.45	2.45
Q22	S	0	0.37
	G	0	0
	D	0	4.20
Q23	E	0	0
	B	0	0.64
	C	0	0.04
Q24	E	0	0
	B	0	0.04
	C	0	0
Q25	E	0	4.91
	B	0	4.22
	C	0	4.85
Q26	E	0	4.91
	B	0	4.78
	C	0	4.22
Q27	E	0	0
	B	0.75	0.75
	C	2.64	2.64

		FM	AM
Q28	E	0.75	0.75
	B	1.40	1.40
	C	1.68	1.68
Q29	E	0	0
	B	0.74	0.74
	C	2.04	2.04
Q30	E	5.10	5.05
	B	4.93	4.29
	C	0	4.91
Q31	E	5.10	5.05
	B	4.36	5.30
	C	4.99	0
Q32	S	0.93	0.94
	G	0.68	0.69
	D	2.63	2.63
Q33	E	0	0
	B	0.60	0.61
	C	9.3	1.2
Q34	E	10.15	1.97
	B	9.97	1.78
	C	14.90	2.77
Q35	E	0	0
	B	0.66	0
	C	0.02	1.16
Q36	E	0	0
	B	0	0.66
	C	1.38	0.02

		FM	AM
Q401	E	0	0
	B	0.61	0
	C	0.07	5.30
Q402	E	0	0
	B	0	0.61
	C	4.93	0.07
Q403	E	0	0
	B	0	0
	C	0.46	5.96
Q404	E	0	0
	B	0.66	0.66
	C	0.07	0.07
Q405	E	0	0
	B	0	0
	C	6.00	6.00
Q406	E	6.00	6.00
	B	6.00	6.00
	C	0	0
Q407	E	6.00	6.00
	B	5.99	5.99
	C	0	0
Q408	E	0	0
	B	0	0
	C	5.99	5.99
Q409	E	3.53	3.53
	B	3.00	3.00
	C	3.35	3.35

		FM	AM
Q37	E	6.00	6.00
	B	6.00	6.00
	C	0.75	0.70
Q38	E	0	0
	B	0.53	0
	C	0.68	0
Q39	E	0	0
	B	0.68	0
	C	5.81	0
Q40	E	5.97	5.97
	B	5.27	5.96
	C	5.87	0
Q41	E	0	0
	B	0	0
	C	0	0
Q42	E	0	0
	B	0	0
	C	0	0
Q43	E	5.10	5.05
	B	5.84	5.83
	C	5.97	5.97
Q44	E	6.00	6.00
	B	5.31	5.31
	C	5.97	5.97

SCHEMATIC DIAGRAM (Ca

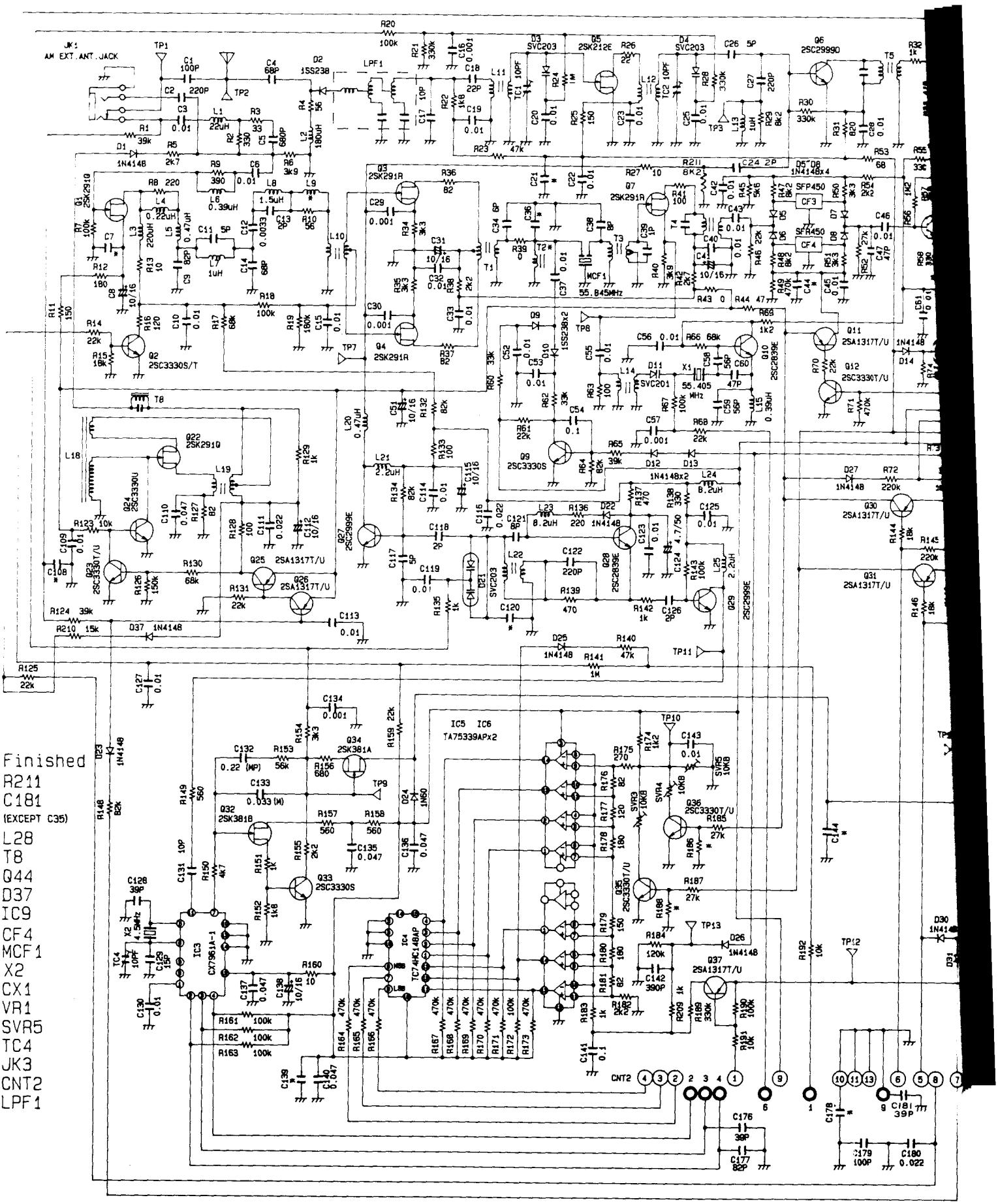

at No.20-214)

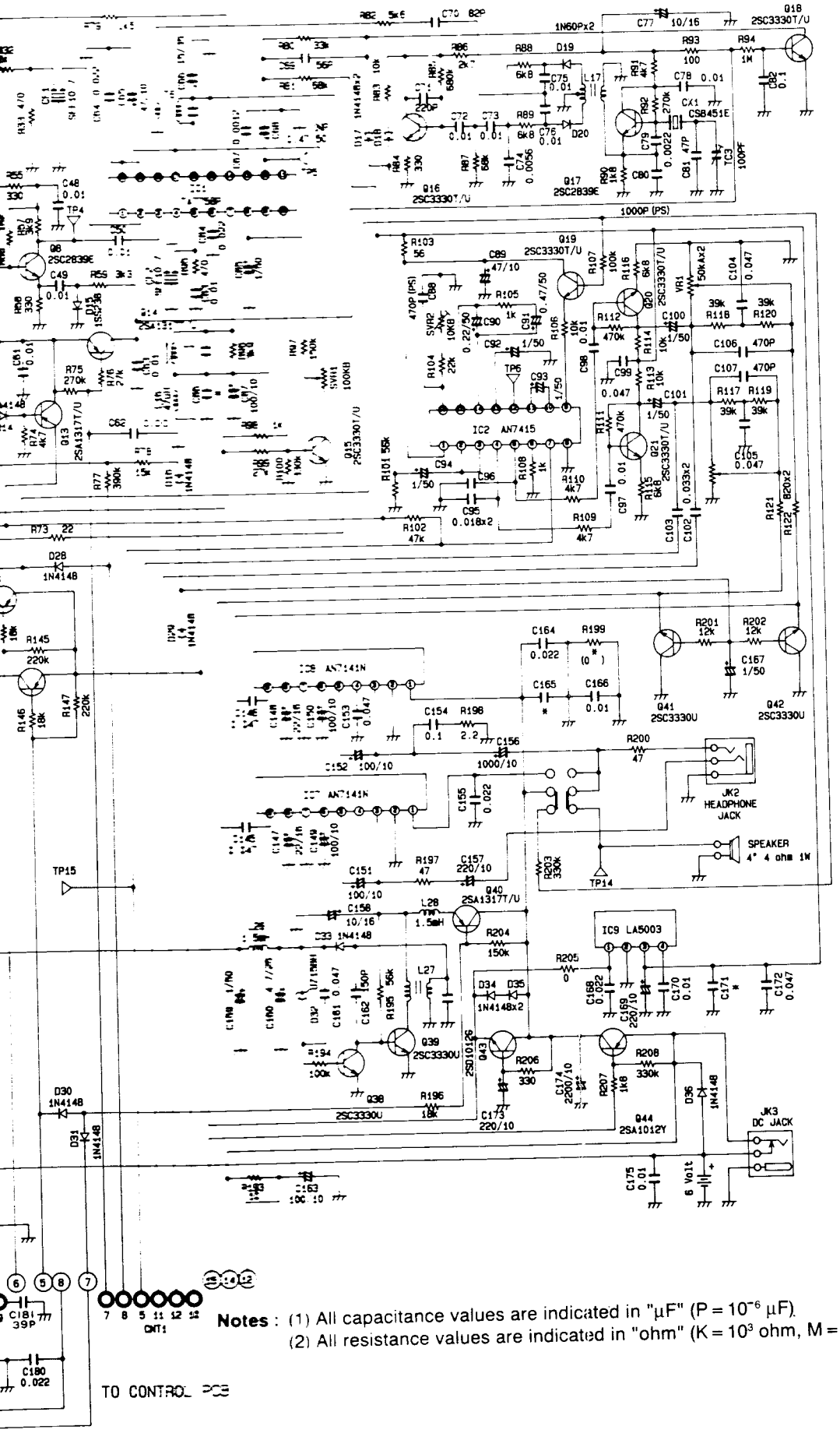

Notes : (1) All capacitance values are indicated in "μF" ($P = 10^{-6}$ μF).
(2) All resistance values are indicated in "ohm" ($K = 10^3$ ohm, $M = 10^6$ ohm).

SCHEMATIC DIAGRAM (Cat No.20-214)