REALISTIC®

Service Manual

20-127/9127

PRO-2022
Desk-Top Programmable Scanner
Catalog Number: 20-127/9127

CONTENTS

PRODUCT SAFETY NOTICE

Many electrical and mechanical parts in this chassis have special characteristics. These characteristics often pass unnoticed and the protection afforded by them cannot necessarily be obtained by using replacement components rated for higher voltage, wattage, etc. Replacement parts that have these special safety characteristics are identified in this manual and its supplements; electrical components having such features are identified by a ⚠ in the schematic diagram and the parts list.
Before replacing any of these components, read the parts list in this manual carefully. The use of substitute replacement parts that do not have the same safety characteristics as specified in the parts list may create shock, fire or other hazards.

CONTENTS

PRODUCT SAFETY NOTICE

Many electrical and mechanical parts in this chassis have special characteristics. These characteristics often pass unnoticed and the protection afforded by them cannot necessarily be obtained by using replacement components rated for higher voltage, wattage, etc. Replacement parts that have these special safety characteristics are identified in this manual and its supplements; electrical components having such features are identified by a ⚠ in the schematic diagram and the parts list. Before replacing any of these components, read the parts list in this manual carefully. The use of substitute replacement parts that do not have the same safety characteristics as specified in the parts list may create shock, fire or other hazards.

SPECIFICATIONS

Frequency Coverage	VHF Lo	*1	30 MHz - 54 MHz 5 kHz steps
	AIRCRAFT		108MHz - 136 MHz 25 kHz steps
	VHF Hi		136.005 MHz - 174 MHz 5 kHz steps
	UHF Lo		380 MHz - 512MHz 12.5 kHz steps
	UHF Hi	*2	806.0000 MHz - 823.9375 MHz
		*2	851.1125 MHz - 868.9375 MHz
		*2	896.1125 MHz - 960.0000 MHz 12.5 kHz steps

		UNIT	NOMINAL	LIMIT
Sensitivity	VHF Lo FM	μV	0.5	2.0
	AIRCRAFT AM	μV	2.0	5.0
	VHF Hi FM	μV	1.0	2.0
	UHF Lo FM	μV	1.0	4.0
	UHF Hi FM	μV	2.0	4.0
Squelch Sensitivity	Threshold	μV	1	4
	Tight VHF Lo, Hi, UHF	dB	25	15
	Aircraft	dB	20	10
Selectivity	-6 dB	kHz	± 9	± 12
	-50 dB	kHz	± 15	± 18
Spurious Rejection	VHF Lo at 40 MHz	dB	50	40
(except primary image)	AIRCRAFT at 124 MHz	dB	50	40
	VHF Hi at 154 MHz	dB	50	40
	UHF		Not specified	
IF Rejection	10.7 MHz at 154 MHz	dB	70	60
Modulation Acceptance	(EIA RS-204-A)	kHz	± 8	± 5
Signal to Noise Ratio	VHF Lo at 40 MHz	dB	45	30
	AIRCRAFT at 124 MHz	dB	35	25
	VHF Hi at 154 MHz	dB	45	30
	UHF Lo at 450 MHz	dB	35	25
	UHF Hi at 860 MHz	dB	35	25
Residual Noise	Vol. Min.	mV	3	5
Scanning Speed	Fast	channels/sec	8	6-10
	Slow	channels/sec	4	3-5
Scan Delay Time		sec	2	1-3
Audio Output Power	T.H.D. 10 %	W	1.0	0.8

Channels of Operation	Any 200 channels in any band combination
Channels, Frequency and Mode display	Liquid crystal display
Receiving System	Direct Key entry Digital-Controlled Synthesizer, Superheterodyne 1st IF: 10.7 MHz 2nd IF: 455kHz
Power Source	AC 120 V, 60Hz, 15 W DC 13.8 V, 8 W
Jacks	Headphone, External speaker and "BNC" type antenna connector

*1 68-88 MHz for 20-9127

*2 806-960 MHz for 20-9127

Note: Nominal specs represent the design specs: all units should be able to approximate these – some will exceed and some may drop slightly below these specs. Limit specs represent the absolute worst condition that still might be considered acceptable; in no case should a unit perform to less than any limit spec.

BLOCK DIAGRAM

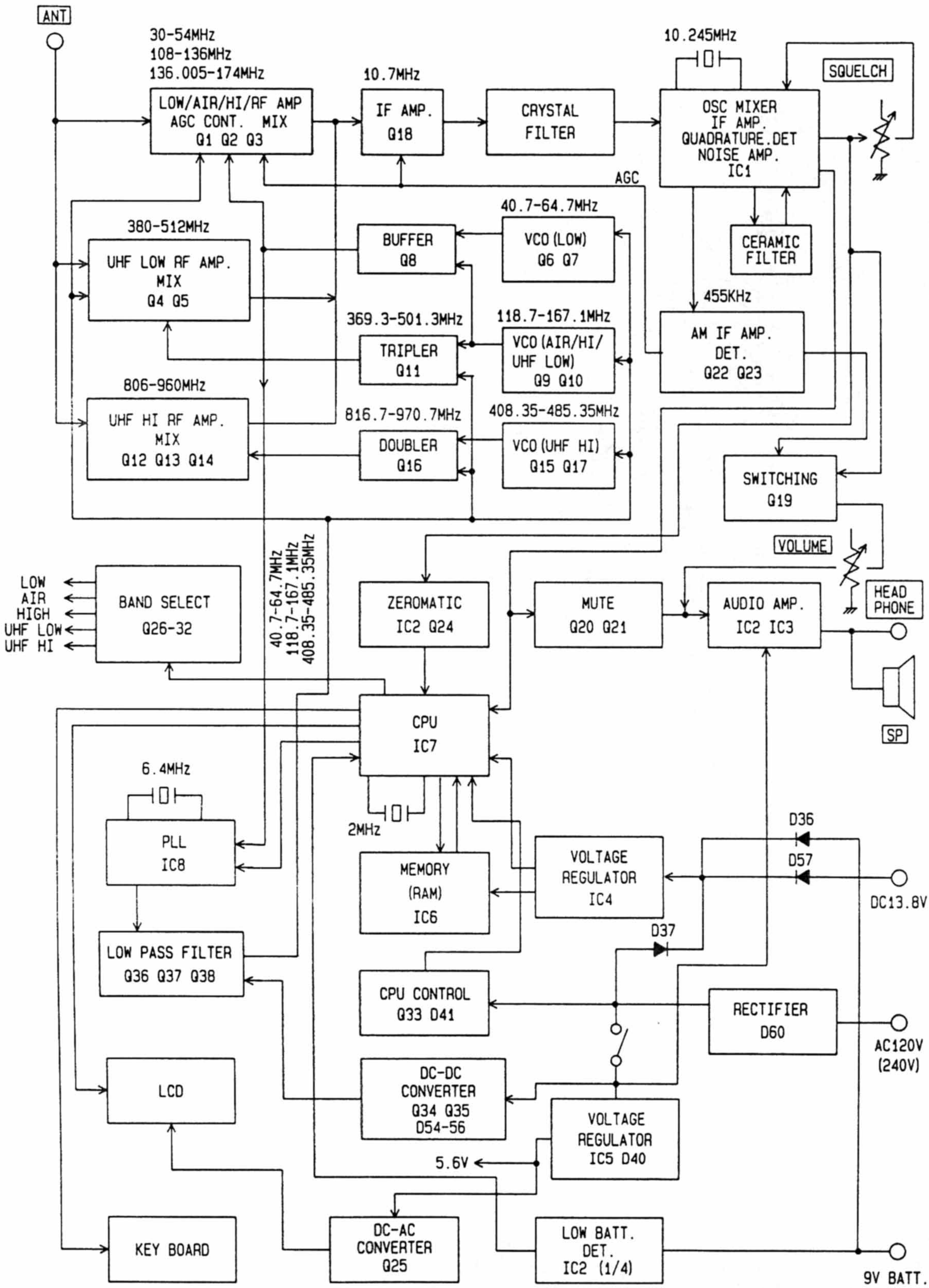

PRINCIPLES OF OPERATION

The PRO–2022 is a Phase Locked Loop (PLL) synthesized VHF/UHF, FM receiver, controlled by a Central Processing Unit (CPU) via a keyboard.

The VHF Lo band (30 - 54 MHz) or VHF Hi band (136.005 - 174 MHz) is received in 5 kHz increments, and the UHF Lo band (380 -512 MHz) or UHF Hi band (806 - 960 MHz) is set up to be 12.5 kHz increments. Similarly, the aircraft band (108 -136 MHz) is in a 25kHz step.

All functions such as receiving frequency range, frequency determination, scanning and delay time, etc., are controlled by the CPU. The CPU is able to do only the assigned functions, and no modification of the CPU is feasible.

The following paragraphs explain the operation of the circuit in terms of the functional blocks:

A variable capacitance diode (varactor) tuning ("Automatic Tuning System") is employed on all Bands.

Field-effect transistors (FET) are used in the RF/MIX circuits of lo and hi bands, to achieve optimum mix-modulation and mutual-modulation characteristics. Q18 amplifies the 10.7 MHz IF. A 10.7MHz monolithic crystal filter is incorporated to obtain a good IF selectivity.

IC1 contains the local oscillator, mixer, IF amplifier, quadrature FM detector, noise amplifier. A crystal oscillator produces 10.245 MHz, which is mixed with 10.7 MHz, resulting in 455 kHz IF. A 455 kHz ceramic filter is provided to increase the IF selectivity. The 455 kHz IF signal is amplified in the IF amp stage, and the quadrature FM detector detects it to an audio signal.

The detected output of FM is applied to IC3. IC3 amplifies the audio signals and drives the speaker.

IC7 is the CPU. The CPU does data processing, calculation etc. Any unstable supply voltage (V_{DD}) to the CPU can cause the CPU to malfunction, such as wrong data processing, wrong data transfer etc. To overcome this, C164 and R167 in the logic circuit "initialize" the CPU. (Refer to the schematic on page 55.)

The initialization is done as soon as AC plug or external power is connected. Figure A shows the initializing waveform. Memory back up function is automatically started whenever the initialization has been done.

The RESET switch is located in the hole on the read panel and is used to correct an LCD or keyboard malfunction. The initialization of the CPU, mentioned above can also be done by pushing RESET.

Key input, receiving frequency, etc. is managed by the CPU, and CPU output drives LCD.

CX1 (2 MHz) is a ceramic oscillator clock which is used for CPU control. Figure B shows 1/8 divided waveform of Figure C.

IC7 Pin (1)

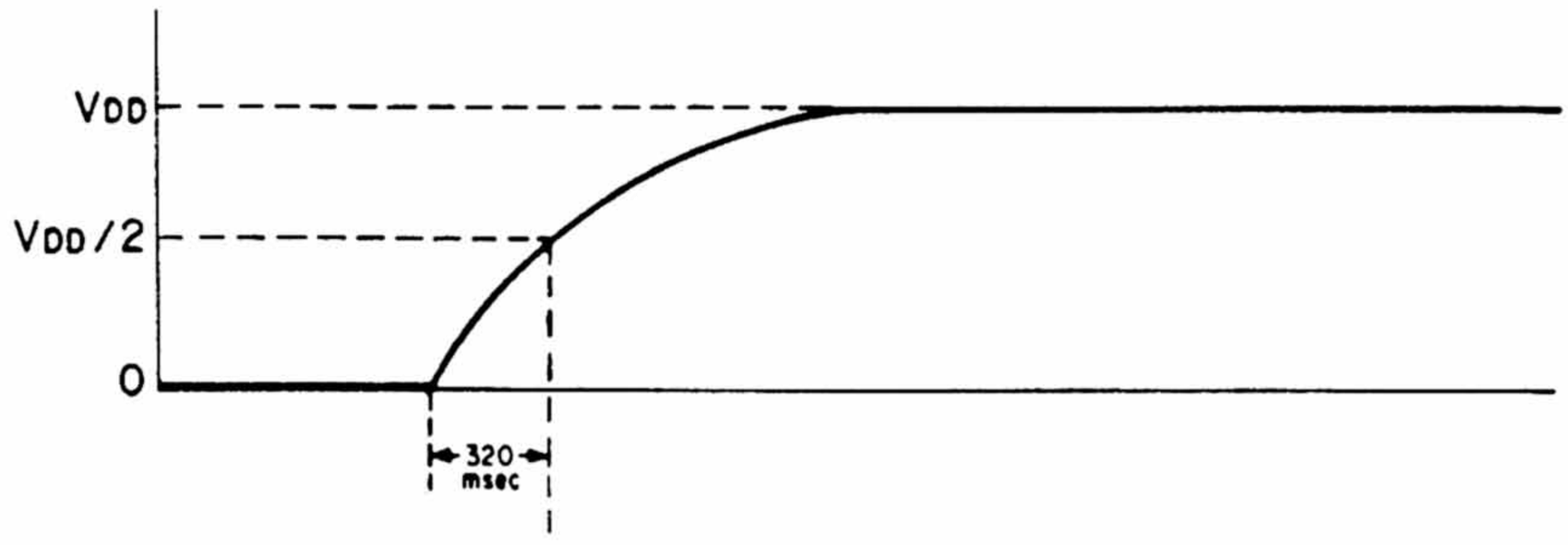

Figure A

IC7 Pin (84)

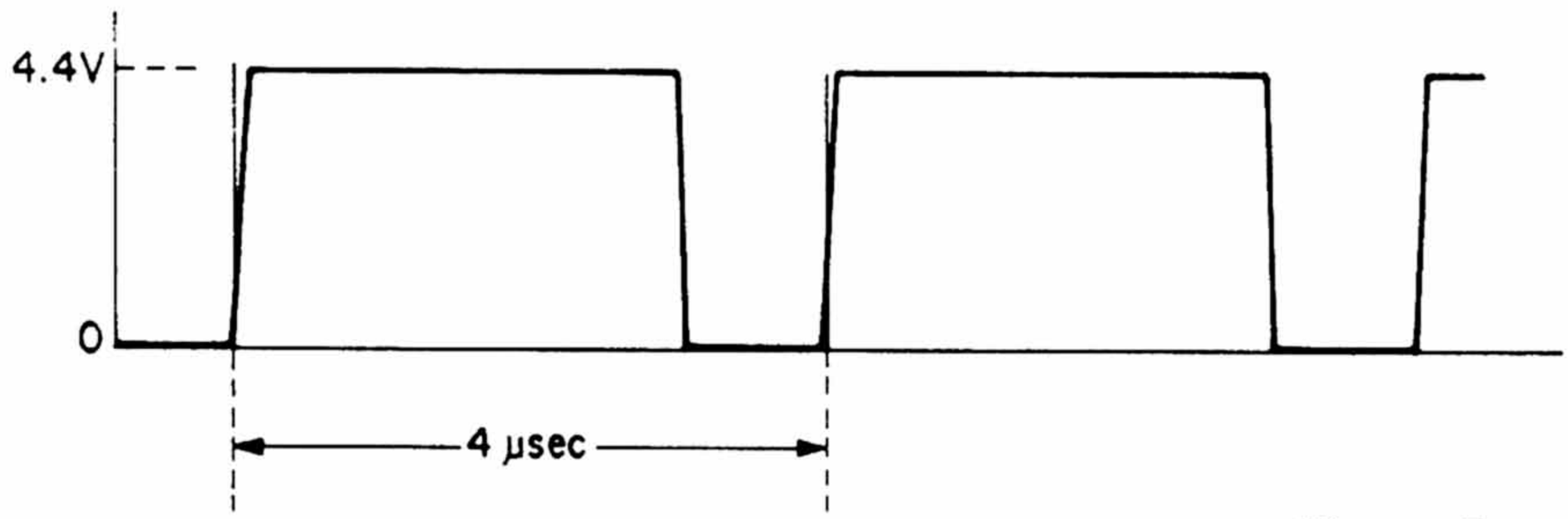

Figure B

IC7 Pin (5)

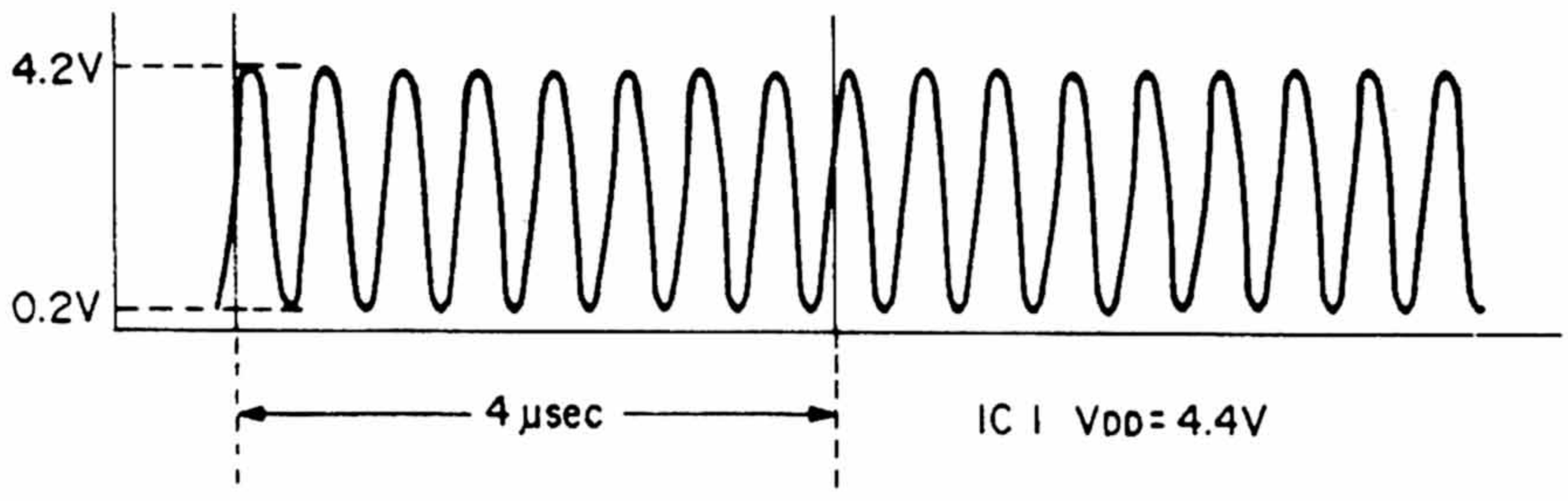

Figure C

GENERAL OPERATION OUTLINE

Turn power SW on. Automatically sets to SCAN mode and starts scanning when the SQ is on.

Press RESET SW, located at the battery compartment.

Scan Bank 1 through 10 are displayed.
If there is any blank scan bank, press the number key to light all scan banks, and to blink one of them in one after another.

Press [1] through [9] key.
Scan Bank 1 through 9 will disappear.

Press [0] key. No response.

Press [1] through [9] key and [0] key. Scan Bank 1 through 9 are displayed except 0.

Press [SPEED] so that scan speed is changed in two speeds, fast or slow.

Press [SPEED] so that scan speed is changed to the other.

To obtain priority operation in scan mode, press [PRI].

To release priority operation, press [PRI] again.

Press [MANUAL]. When [MANUAL] is pressed again, the channel advances. To select one of 1 through 200 channels, push the number key and then push [MANUAL].

To start DIRECT search, press [▲] or [▼] key.
No reaction when the frequency is 000.0000.

Press [MANUAL].

To hold the channel, press [DELAY].
(When this channel is not set to DELAY.)

To release the delay function, press [DELAY] again.

To skip certain frequency, press [L/OUT].
(When this channel is not set to L/OUT.)

To release the Lock Out function, press [L/OUT] again.

To obtain priority operation in manual mode, press [PRI].

To release the priority function, press [PRI] again.

Press [PGM] to set to program mode.

*1 *2

*1

Enter the desired frequency in each channel as follows:

Enter the desired frequency with numeral keys.

Press [ENTER] to memorize the frequency.
If wrong frequency (out of the band) is entered, "Error" will be displayed.
Press [CLEAR], then enter the correct frequency.

Press [PGM] to advance to next channel.
Enter the frequency and press [ENTER].
Repeat it to memorize frequencies one by one.

Press [PRI] so that priority channel appears.

To revert to the previous channel, press [PRI] again.

Press numeral keys (1 through 200) and then press [PRI].
Priority channel will be changed to newly entered channel.

To call monitor channels, press [MON].

Press [MON] so that next monitor channel appears.

To call the monitor channels directly, press numeral keys.

*2

Enter search frequency as follows.

Press [LIMIT] and enter the lower frequency of the range to search with numeral keys.

Press [ENTER].

Press [LIMIT] and enter the upper frequency of the range to search.

Press [ENTER].

Press [▲] to search from lower frequency.
Press [▼] to search from upper frequency.
(squelch must be on).

Press [MON] to store the desired frequency (10 monitor channels) in the search mode.

To start search, press [▲]or [▼].

To revert to the previous channel, press [PGM].

ALIGNMENT/ADJUSTMENT

Alignment and Test Points Locations

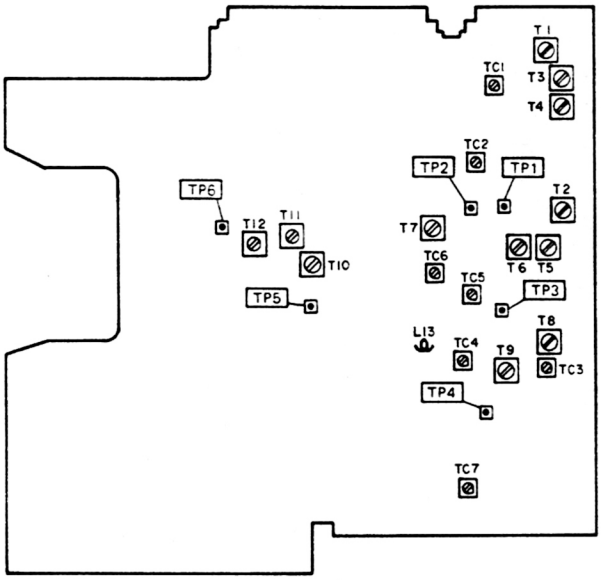

Alignment Preparation

Test equipment required

Oscilloscope (0 -500 kHz, 0 - 50 MHz)
AC SSVM
DC SSVM
Frequency Counter (200 MHz)
8-ohm dummy load
Slow Sweep Generator with variable marker (10.7 MHz)
VHF Sweep Generator with variable marker (30 -54 MHz, 108 - 174 MHz)
UHF Sweep Generator with variable marker (380 - 512 MHz)
FM Signal Generator (30 -54 MHz, 136.005 -174 MHz, 380 -512 MHz, 806 -960 MHz)
AM Signal Generator (108-136 MHz)

Note:

- Use non-metallic tuning tools.
- The test equipment and receiver should be warmed up at least 10 minutes before proceeding to alignment.
- The signal level from the generator should be kept as low as possible to obtain the usable output.

Program CH1 to CH15 as follows.

Channel	Frequency(MHz)	Channel	Frequency(MHz)
1	30.0000	9	174.0000
2	41.0050	10	380.0000
3	54.0000	11	451.0000
4	108.0000	12	512.0000
5	121.0000	13	806.0000
6	136.0000	14	860.0000
7	136.0050	15	960.0000
8	155.0000		

Table 1

Alignment Procedures

Reference Frequency OSC Alignment

Step	Control Setting	Test Instrument Connection	Adjust	Remarks
1	OFF/VOLUME Control: ON SQUELCH Control: Fully counter clockwise (CCW) Select Channel 4.	Connect Frequency counter to TP3 through a ceramic capacitor (5–10 pF) and GND. Figure 1	TC7	Adjust TC7 so that the frequency is 118.700000 MHz± 10 Hz

IF Section Alignment

Step	Control Setting	Test Instrument Connection	Adjust	Remarks
2	OFF/VOLUME Control: ON SQUELCH Control: CCW	Connect test instruments as shown in Fig. 2	T7 T10	Adjust T7 to symmetrize the upper and lower heights of the S curve to be equal and adjust T10 to symmetrize the left and the right of the S curve.

Note:
During alignment, maintain the sweep generator output at the lowest level possible to prevent overloading.

Figure 1

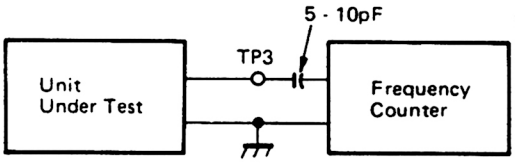

Figure 2

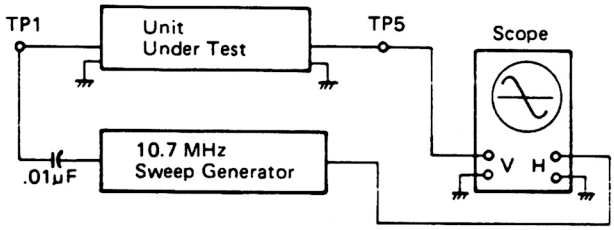

VCO Alignment
VHF Lo band

Step	Control Setting	Test Instrument Connection	Adjust	Remarks
3	OFF/VOLUME Control: ON SQUELCH Control: CCW Select Channel 1 through 3.	Connect DC SSVM to TP4 and GND.	TC3 T8	1) Select channel 3 and adjust TC3 for 13V on the DC SSVM. 2) Select channel 1 and adjust T8 for 1.0 V on the DC SSVM. 3) Repeat steps 1) and 2) until no further improvement is observed. See Table 2.

CH	Frequency	Voltage
CH1	30 MHz	Voltage at TP4 0.9–1.2 V
CH2	41.005 MHz	Voltage at TP4 5.5–6.5 V
CH3	54 MHz	Voltage at TP4 12.5–13.5 V

Table 2

VHF Air, Hi and UHF Lo bands

Step	Control Setting	Test Instrument Connection	Adjust	Remarks
4	OFF/VOLUME Control: ON SQUELCH Control: CCW Select Channel 4 through 12.	Connect DC SSVM to TP4 and GND.	TC4 T9	1) Select channel 12 and adjust TC4 for 13V on the DC SSVM. 2) Select channel 4 and adjust T9 for 1.0 V on the DC SSVM. 3) Repeat steps 1) and 2) until no further improvement is observed. See Table 3.

CH	Frequency	Voltage
CH4	108.0000 MHz	Voltage at TP4 0.9–1.1 V
CH5	121.0000 MHz	Voltage at TP4 2.4–3.1 V
CH6	136.0000 MHz	Voltage at TP4 5.7–6.7 V
CH7	136.0050 MHz	Voltage at TP4 1.6–1.9 V
CH8	155.0000 MHz	Voltage at TP4 4.1–5.1 V
CH9	174.0000 MHz	Voltage at TP4 11.0–11.8 V
CH10	380.0000 MHz	Voltage at TP4 1.2–1.6 V
CH11	451.0000 MHz	Voltage at TP4 5.7–6.7 V
CH12	512.0000 MHz	Voltage at TP4 12.9–13.1 V

Table 3

UHF Hi band

Step	Control Setting	Test Instrument Connection	Adjust	Remarks
5	OFF/VOLUME Control: ON SQUELCH Control: CCW Select Channel 15.	Connect DC SSVM to TP4 and GND.	L13	Adjust L13 for 12 V on the DC SSVM. See Table 4.

CH	Frequency	Voltage
CH13	806.0000 MHz	Voltage at TP4 3.4–4.5 V
CH14	860.0000 MHz	Voltage at TP4 6.5–7.7 V
CH15	960.0000 MHz	Voltage at TP4 11.8–12.2 V

Table 4

RF Amp Alignment
VHF Lo band

Step	Control Setting	Test Instrument Connection	Adjust	Remarks
6	OFF/VOLUME Control: ON SQUELCH Control: CCW Select Channel 1 through 3. See Table 1	Connect instruments shown as Fig.3. SWEEP GENERATOR 30–54 MHz.	T1 T2	1) Select channel 2 and adjust T1 and T2 for maximum RF waveform.. 2) Check channel 1 through 3 for maximum output. A slight deviation as Fig.4 is acceptable.

VHF Air band

Step	Control Setting	Test Instrument Connection	Adjust	Remarks
7	OFF/VOLUME Control: ON SQUELCH Control: CCW Select Channel 5 through 6. See Table 1.	Same as Step 6 SWEEP GENERATOR 108–136 MHz.	T3 T5	1) Select channel 5 and adjust T3 and T5 for maximum RF output.. 2) Check channel 4 through 6 for maximum output. A slight deviation as Fig.5 is acceptable.

VHF Hi band

Step	Control Setting	Test Instrument Connection	Adjust	Remarks
8	OFF/VOLUME Control: ON SQUELCH Control: CCW Select Channel 7 through 9. See Table 1.	Same as Step 6 SWEEP GENERATOR 136.0005–174 MHz.	T4 T6	1) Select channel 7 and adjust T4 and T6 for maximum RF waveform. 2) Check channel 7 through 9 for maximum output. A slight deviation as Fig.6 is acceptable.

UHF Lo band

Step	Control Setting	Test Instrument Connection	Adjust	Remarks
9	OFF/VOLUME Control: ON SQUELCH Control: CCW Select Channel 10 through 12. See Table 1.	Same as Step 6 SWEEP GENERATOR 380–512 MHz.	TC1 TC2 TC5	1) Select channel 7 and adjust TC1, TC2 and TC5 for maximum RF output. 2) Check channel 10 through 12 for maximum output. A slight deviation as Fig.7 is acceptable.

UHF Hi band: No adjustment required.

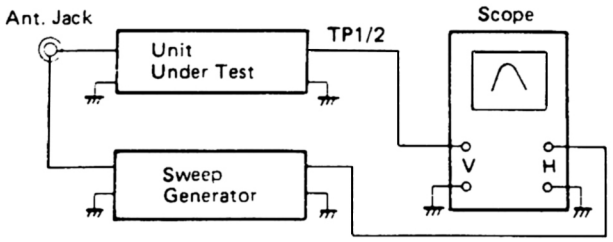

Figure 3

Notes:

- Use TP1 for VHF Lo, Air and VHF Hi band adjustment.
- Use TP2 for UHF Lo band adjustment.

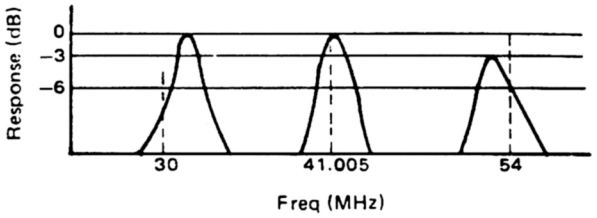

Figure 4

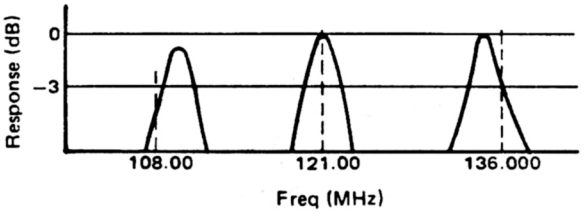

Figure 5

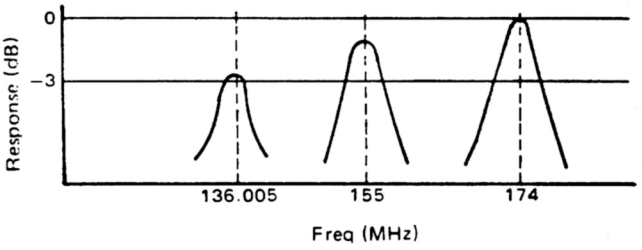

Figure 6

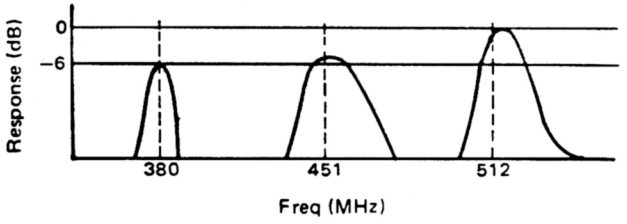

Figure 7

Overall Alignment and Sensitivity Measurement

Step	Control Setting	Test Instrument Connection	Adjust	Remarks
10	OFF/VOLUME Control: ON SQUELCH Control: CCW Select Channel 10.	Connect FM signal generator to the ANT jack and AC SSVM to Headphone jack across 8 ohm dummy load. Fig.8.	TC5	Readjust TC5 for maximum sensitivity.
11	OFF/VOLUME Control: ON SQUELCH Control: CCW Select Channel 5.	Connect AM signal generator to the ANT jack and AC SSVM to Headphone jack across 8 ohm dummy load. Fig.9.	T7 T11 T12	1) Adjust T11 for maximum sensitivity. 2) Adjust T12 for minimum THD. 3) Readjust T7 for maximum sensitivity.
12	OFF/VOLUME Control: ON SQUELCH Control: CCW Select Channel 13.	Same as step 10.	TC6	Adjust TC6 for maximum sensitivity.

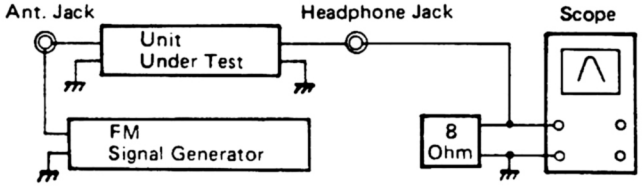

Figure 8

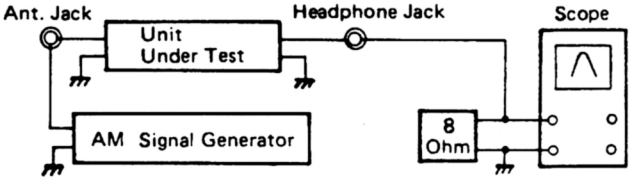

Figure 9

Step	Control Setting	Test Instrument Connection	Remarks
13	OFF/VOLUME Control: ON SQUELCH Control: CCW Channel as Table 1.	Connect FM signal generator to the ANT jack and AC SSVM to Headphone jack across 8 ohm dummy load. Set the signal generator to each frequency as Table 1. Set the VOLUME control for 0 dB (0.775 V) reading on the SSVM.	Turn off the modulation and measure the (S + N)/N ratio.

Note:
TP6 is used to obserbe the AM band detection output.

Zeromatic Function Test Procedure

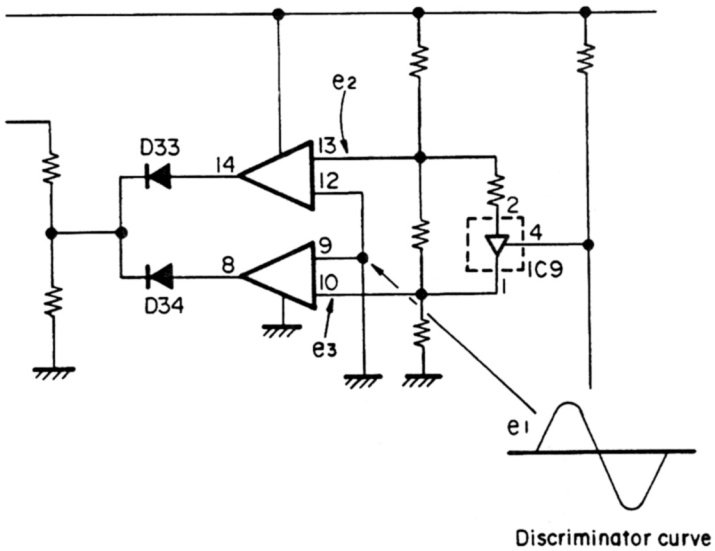

(Zeromatic functions when OUTPUT is in "L" level.)

	$0 < e_1 < e_3$	$e_3 < e_1 < e_2$	$e_2 < e_1 < V_{cc}$
OUTPUT (D33 Cathode)	H	L	H

To adjust the e_1 voltage, receive a signal in the manual mode, and set T3 to obtain 2.7 V (1/2 Vcc) at TP5. It is convenient to use the National Weather Service Signal for the adjustment.
In the event of Zeromatic not functioning correctly, refer to "Reference Frequency OSC Alignment" (page 10), and check 118.700000 MHz ± 10 Hz, and adjust T3 again to 2.7 V DC while a signal is being received.

Key Access Pulse Output (IC1)

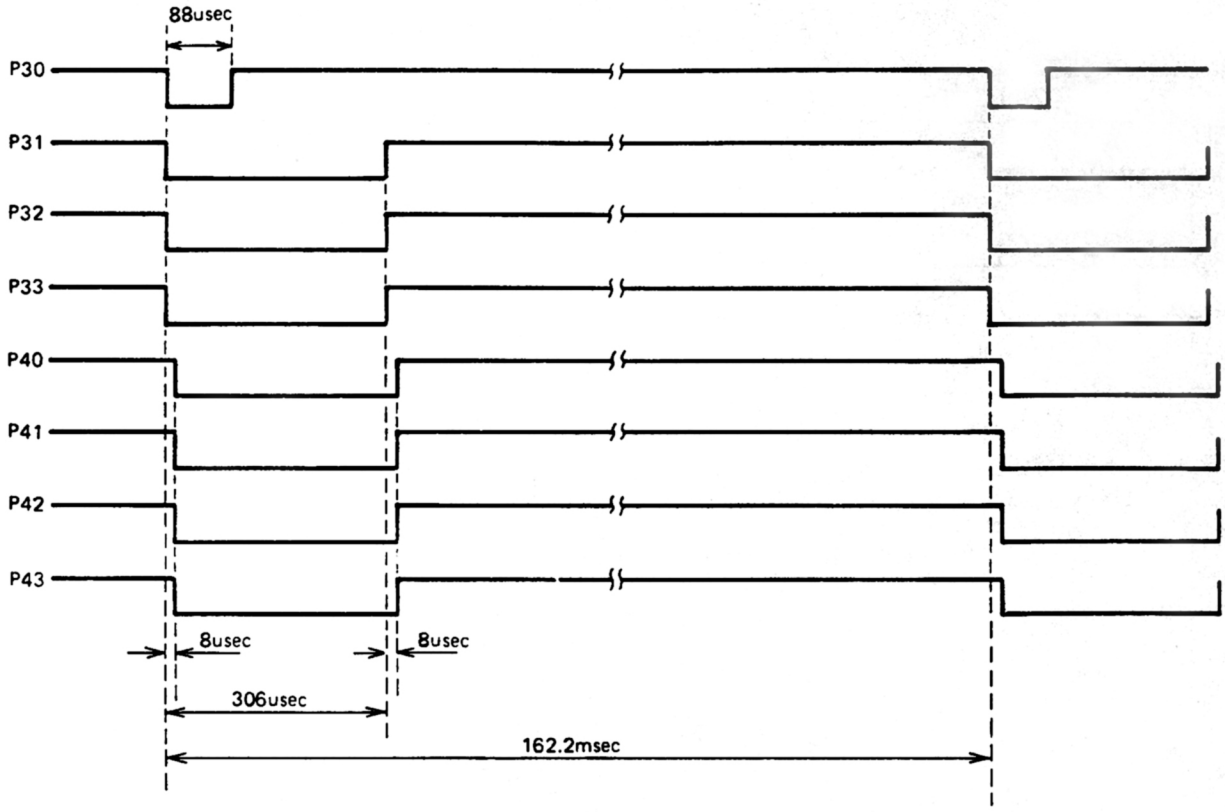

PLL Data Waveform (IC1)

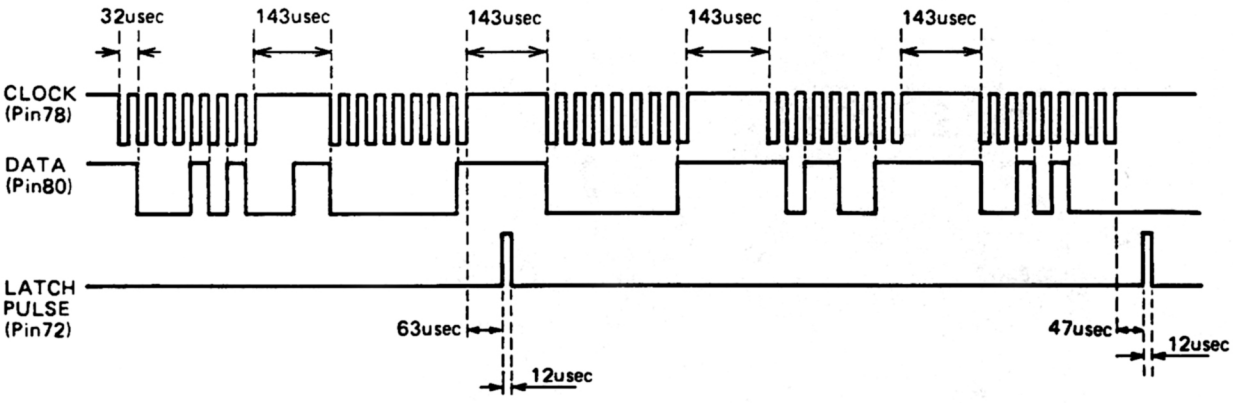

Note:
Enter 150.0000 MHz to channel 1 and lock out other channels.
Observe the waveform while scanning.

MEMORY CHECK

Note:

- Prior to checking the CPU System, measure supply voltage to ICs. (See schematic diagram.)
- While checking the following items, the ICs can "latch up." If so, push RESET switch for about one second and then continue.

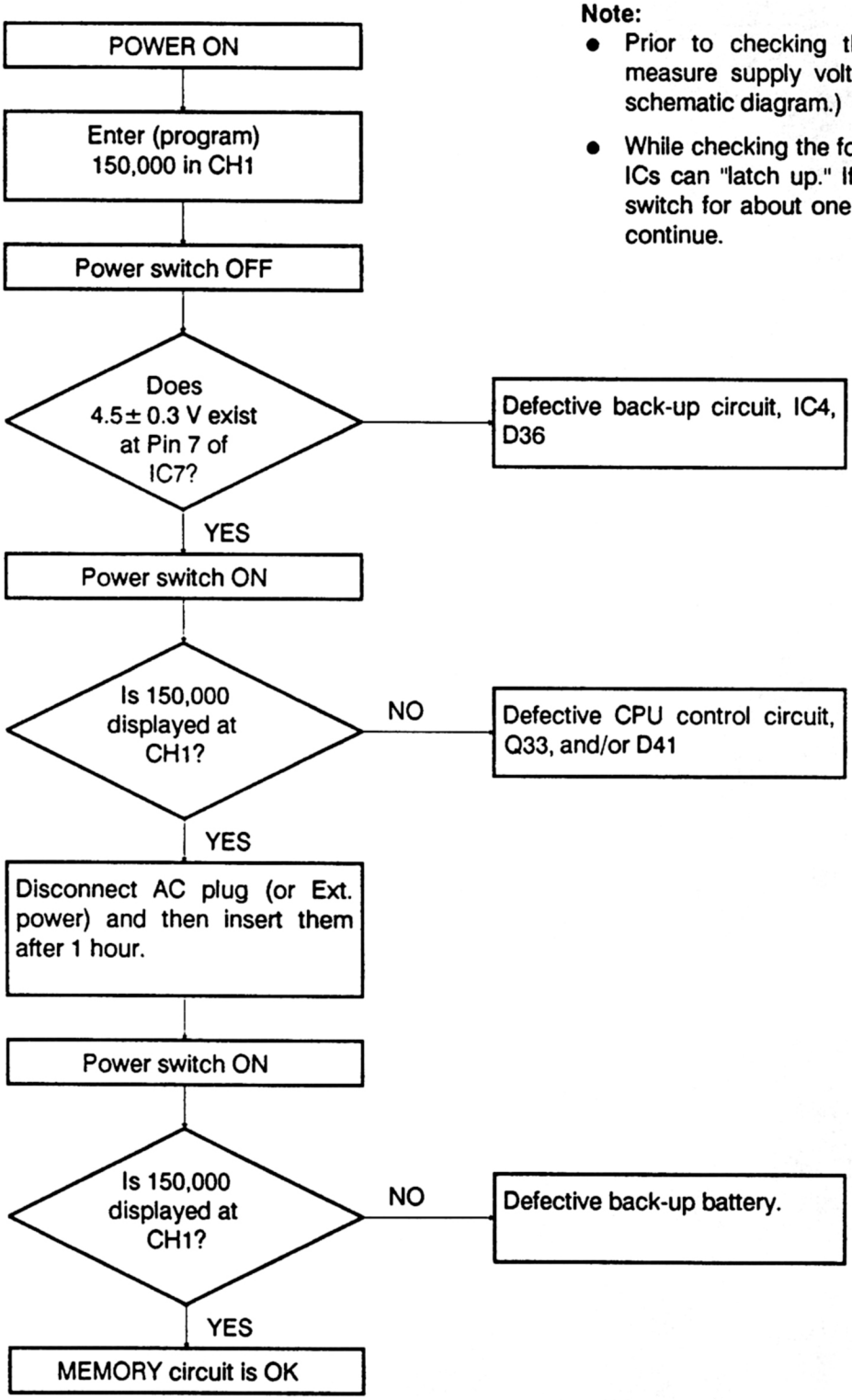

RECEPTION CHECK

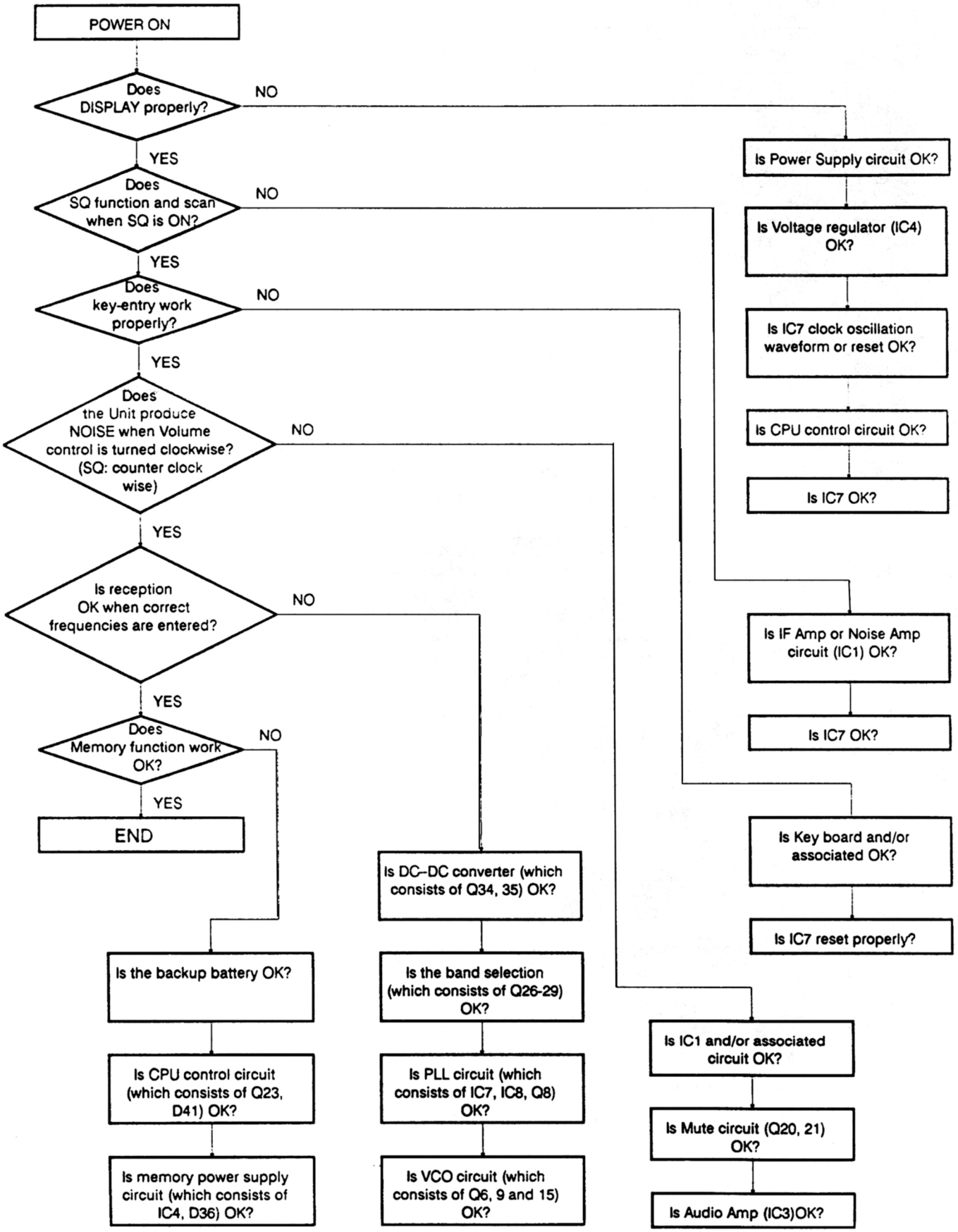

TROUBLE SHOOTING

Symptom	Cause/Remedy
Display does not light and no sound when POWER is on. Volume control: MAX. Squelch control: counterclockwise (CCW)	1) Defective AC Line Cord or ext. power jack: Replace. 2) Defective power transformer T201: Replace. 3) Defective Rectifier D6: Replace. 4) Defective voltage regulator: Replace. 5) Defective On/off switch on volume control: Replace.
Display lights but no sound. Volume control: MAX Squelch control: CCW	1) Defective speaker or headphone jack: Replace the defective parts. 2) Defective audio amplifier IC3 and/or associated circuit components: Replace the defective components. 3) Defective IF amplifier IC1 and /or associated circuit components: Replace the defective components. 4) Defective functional squelch control and/or associated circuit components: Replace the defective components. 5) Defective Q20, 21, IC7 and/or associated circuit: Replace the defective parts.
Sound comes out but display does not light. Volume control: MAX Squelch control: CCW	1) Defective LCD: Replace the defective parts. 2) Defective IC7 and/or associated circuit: Replace the defective parts.
Does not scan and squelch does not operate.	1) Defective IC1 and/or associated circuit components: Replace the defective components. 2) Defective IC7 and/or associated circuit components: Replace the defective components.
Does not scan but squelch operates.	1) Defective IC7 and/or associated circuit components: Replace the defective components.
Displays incorrectly and/or unable to enter correctly when RESET switch is pushed.	1) Defective Keyboard and/or associated circuit components: Replace the defective components. 2) Defective CPU (IC7) and/or associated circuit components: Replace the defective components.
Displays correctly at the time of programming. But after scanning, it becomes faulty.	1) Defective CPU (IC7) and/or associated circuit components: Replace the defective components.
MANUAL select operates but SCAN does not operate.	1) Squelch control is not adjusted right: Turn squelch controlclockwise.
All bands do not operate but display is OK.	1) Defective Q36-38 in lowpass filter: Replace the defective parts. 2) Defective IC8 and/or associated circuit: Replace the defective parts. 3) Defective Q34, 35, D54, 55, 56 DC–DC converter circuit: Replace the defective parts.
VHF Lo (Mid) band does not operate but Air, VHF Hi, UHF Lo and UHF Hi band operate.	1) Defective D1–4, T1, 2 Tuning circuit and/or Q6, 7, 8 VCO circuit: Replace the defective parts. 2) Defective Q32 and/or associated circuit: Replace the defective parts.

Symptom	Cause/Remedy
Aircraft band does not operate but VHF Lo, VHF Hi, UHF Lo and UHF Hi band operate.	1) Defective D12, T3, 5 and/or associated circuit: Replace the defective parts. 2) Defective AM IF Amp including Q22, 23: Replace the defective parts. 3) Defective Q31 in band switch circuit: Replace the defective parts.
VHF Hi band does not operate but Air, VHF Lo, UHF Lo and UHF Hi band operate.	1) Defective D6, 10, T4, 6 and/or associated circuit: Replace the defective parts. 2) Defective Q29 in band switch circuit: Replace the defective parts.
UHF Lo band does not operate but Air, VHF Lo, VHF Hi and UHF Hi band operate.	1) Defective Q4, 5 and/or associated circuit: Replace the defective parts. 2) Defective Q28 in band switch circuit: Replace the defective parts.
UHF Hi band does not operate but Air, VHF Lo, VHF Hi and UHF Lo band operate.	1) Defective Q12-14, 16 and/or associated circuit: Replace the defective parts. 2) Defective Q15, 17 VCO circuit: Replace the defective parts. 3) Defective Q27 and/or associated circuit: Replace the defective parts.
Does not make beep tone.	1) Defective IC3 and/or associated circuit: Replace the defective parts. 2) Defective IC7 and/or associated circuit: Replace the defective parts.
LOW BATT does not indicate when battery voltage went down.	1) Defective IC2 and/or associated circuit: Replace the defective parts.
"Zeromatic" does not operate or holds on a drifted frequency at search operation.	1) Defective IC2, Q24 and D33, 34 in Zeromatic circuit: Replace the defective parts. 2) Discriminator coil is out of adjustment: TP5 shall have 1/2Vcc (approx. 2.7 V) in normal receiving mode. 3) Refer to "Reference Frequency OSC Alignment" on page 10.

Important Note:
Pulse, generated while checking circuits and / or certain combinations of key operation may cause improper operation. To clear the malfunction, re-initialization of CPU is necessary: Push RESET switch while pressing CLEAR , and then release the RESET switch. All channels (200 ch) will be cleared and frequency indicator displays 000.0000. (Be sure the power is on when doing the above.)

HEADPHONE PCB

(Top View)

(Bottom View)

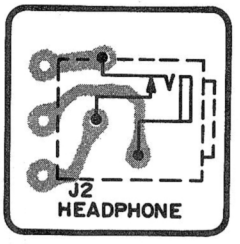

KEYBOARD PCB

(Top View)

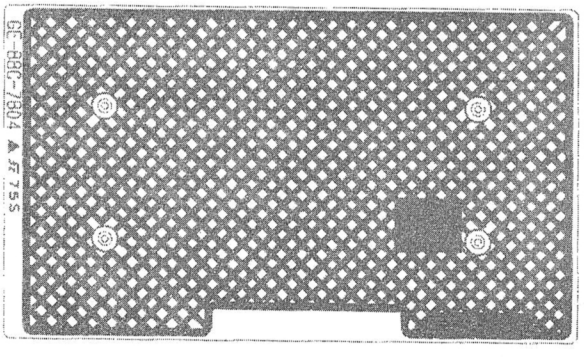

(Bottom View)

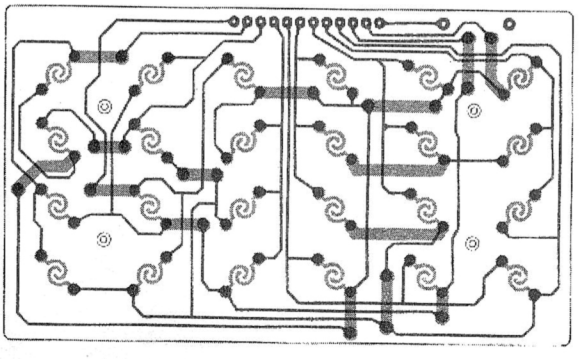

MAIN PCB (Top View)

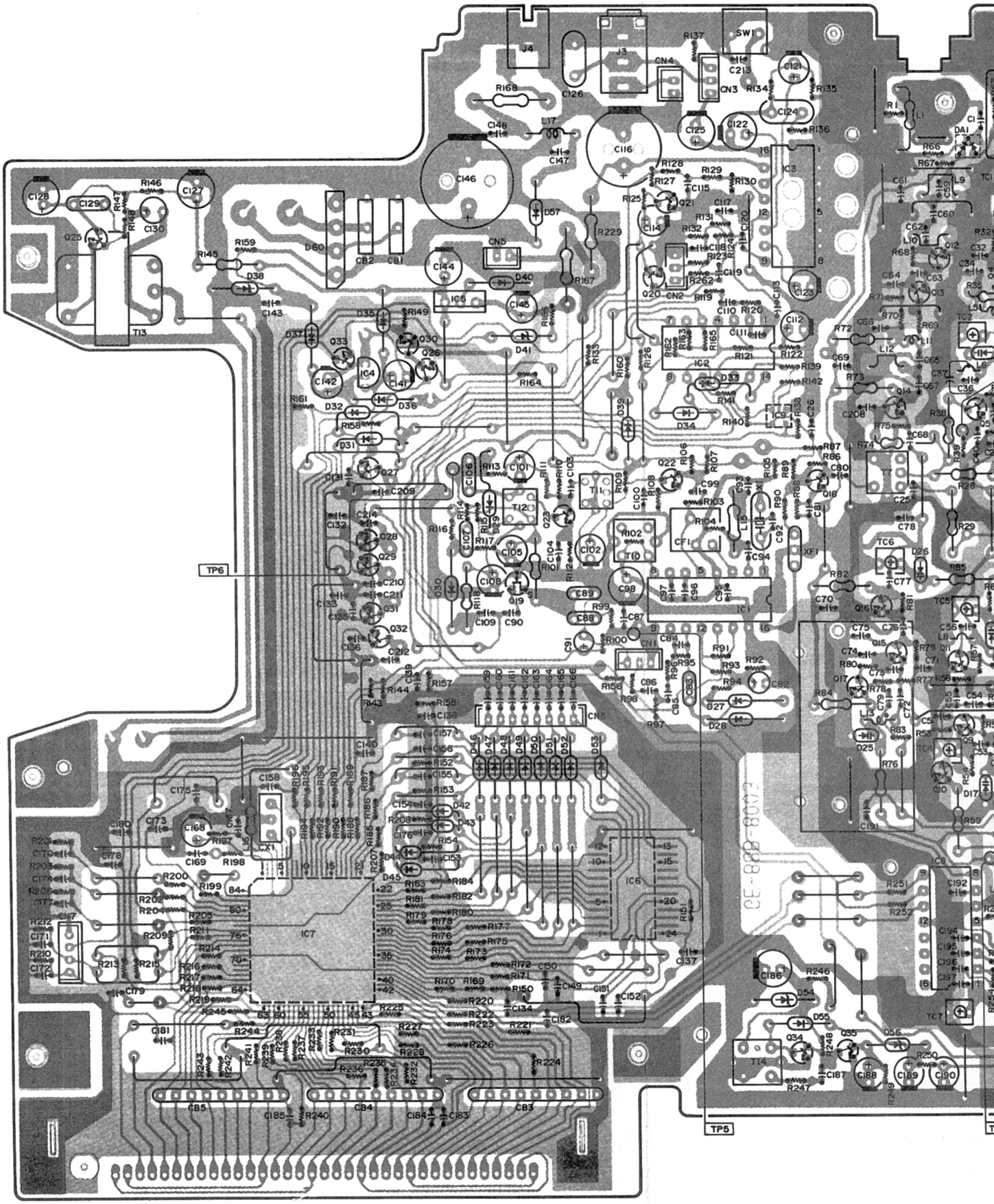

MAIN PCB (Top View)

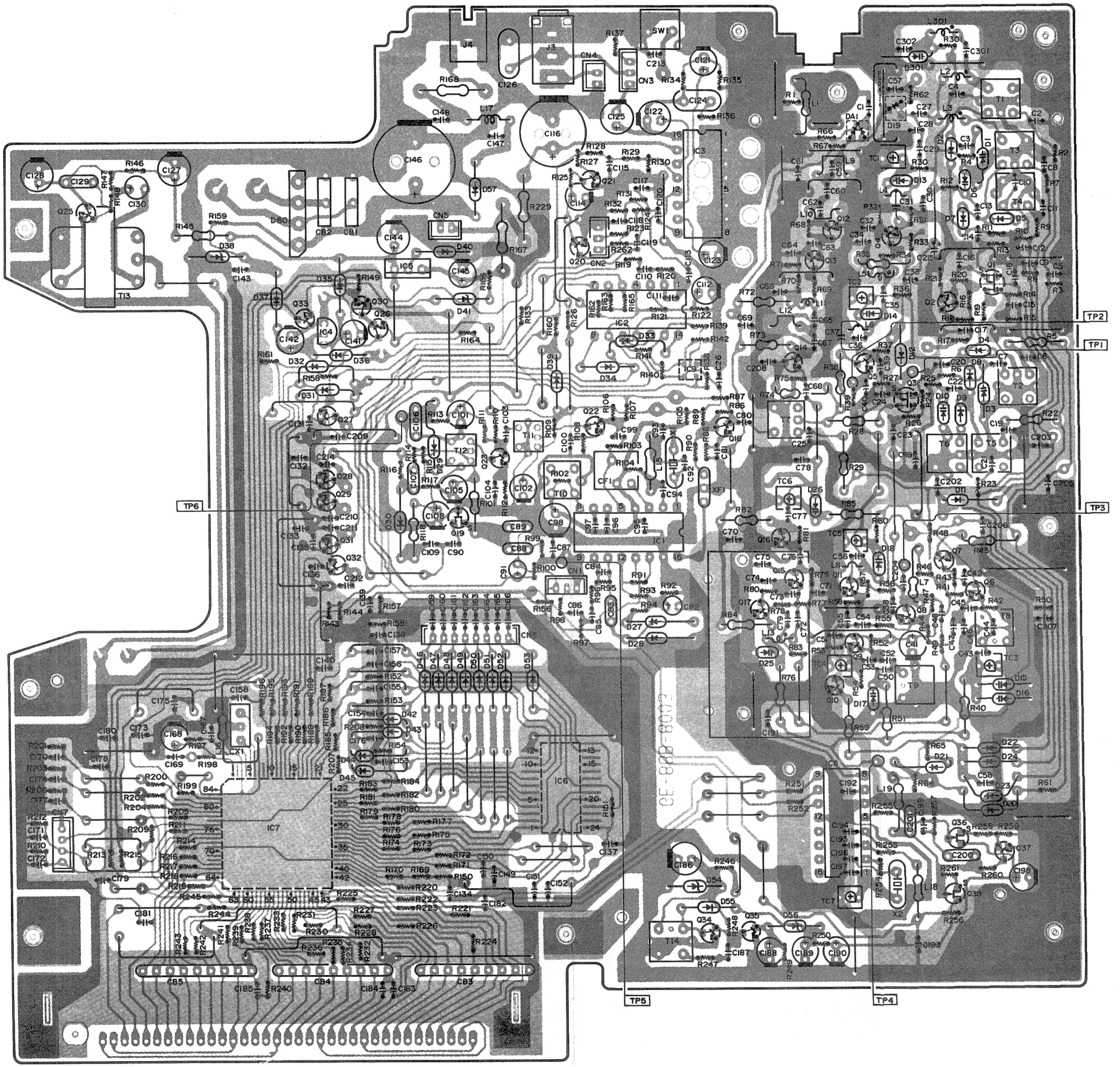

MAIN PCB (Top View)

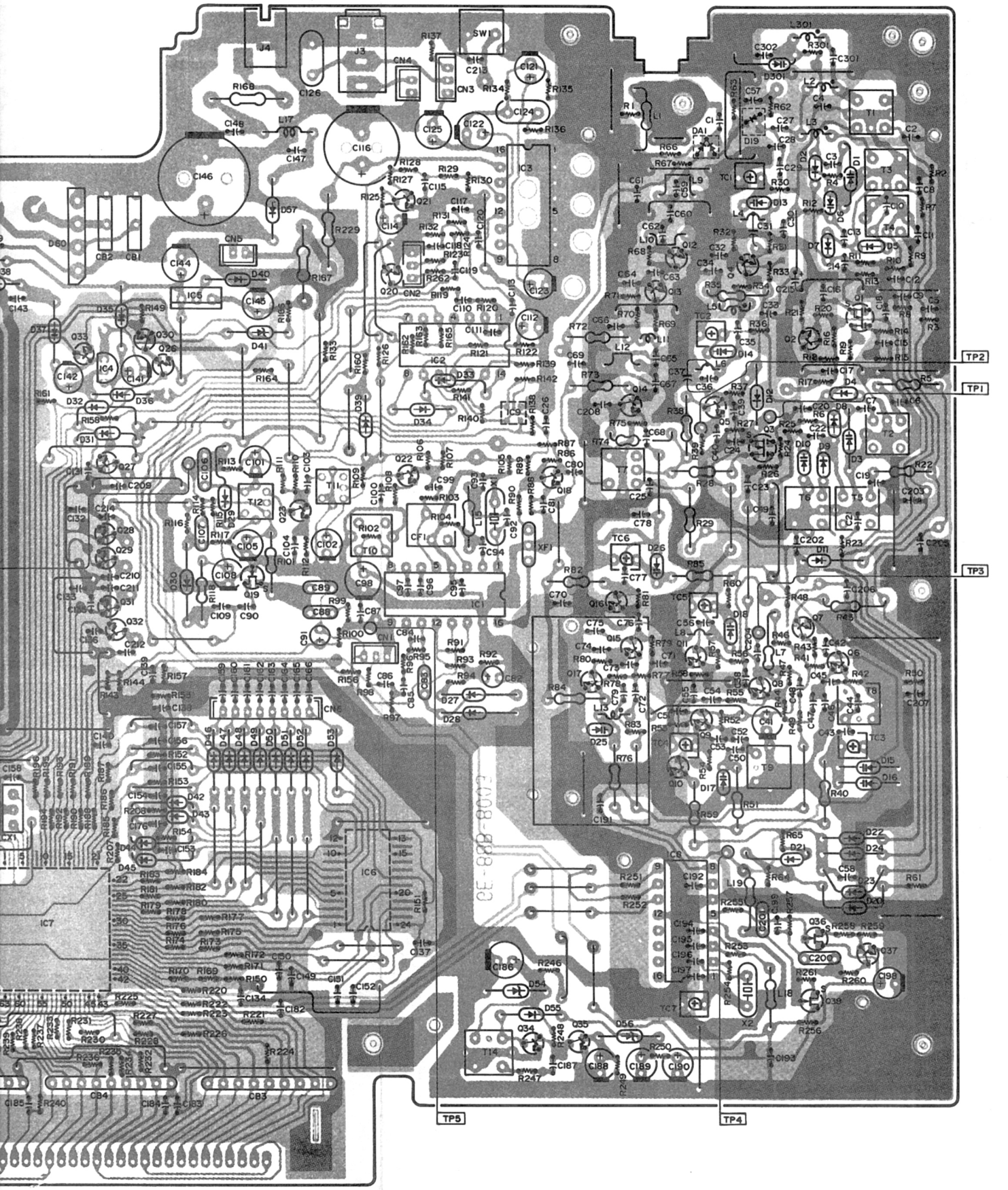

MAIN PCB (Bottom View)

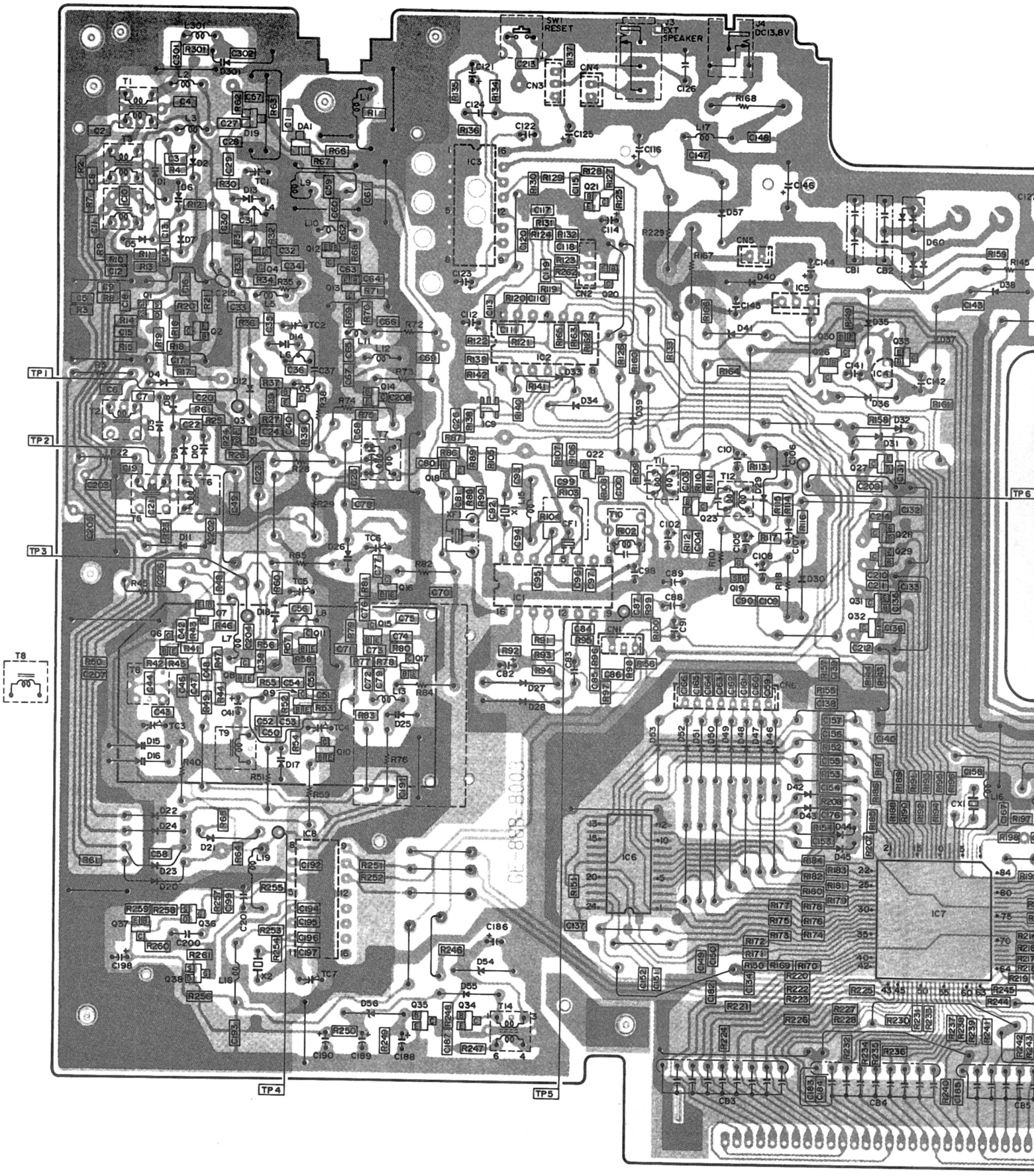

MAIN PCB (Bottom View)

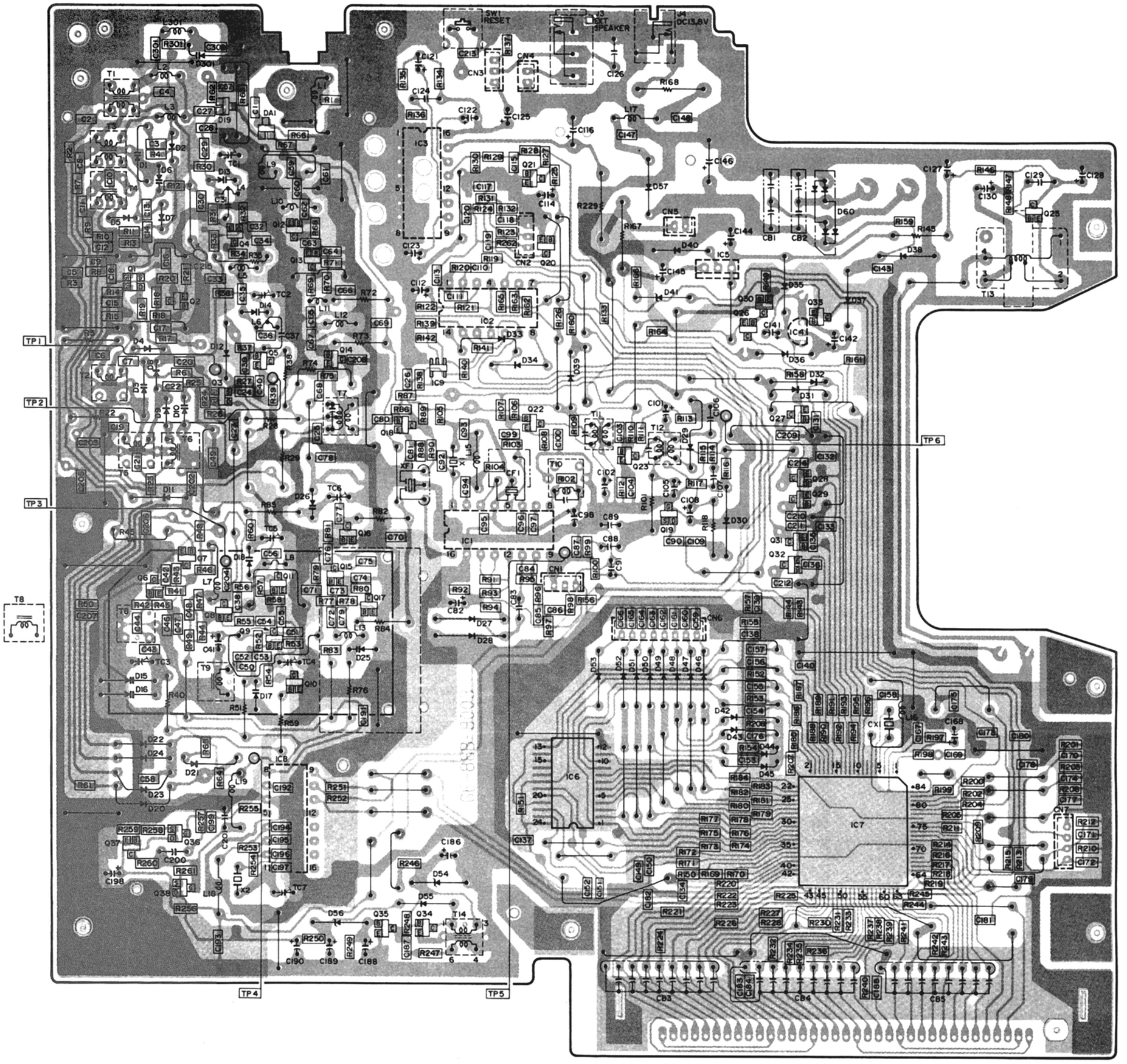

MAIN PCB (Bottom View)

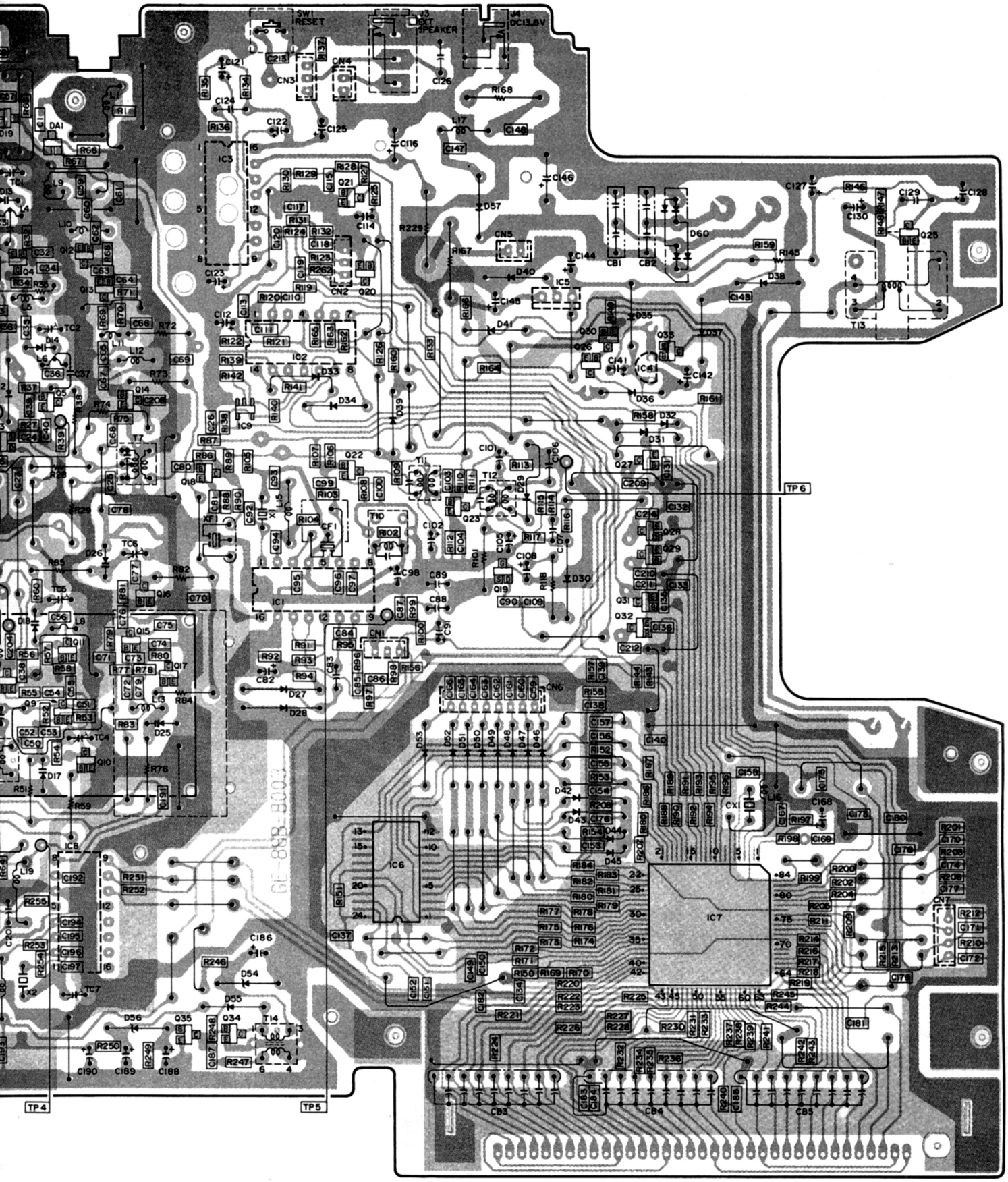

WIRING DIAGRAM

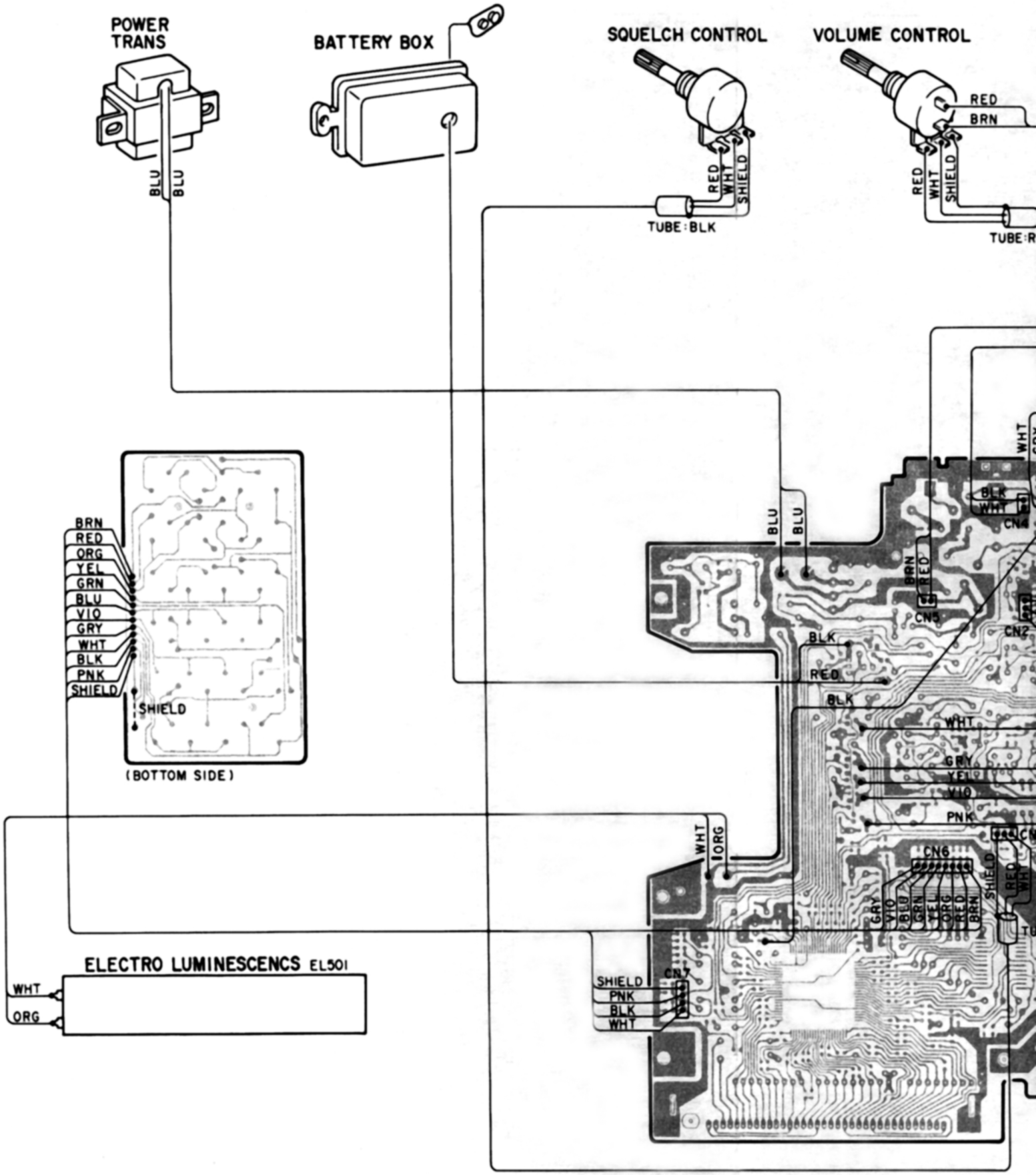

WIRING DIAGRAM

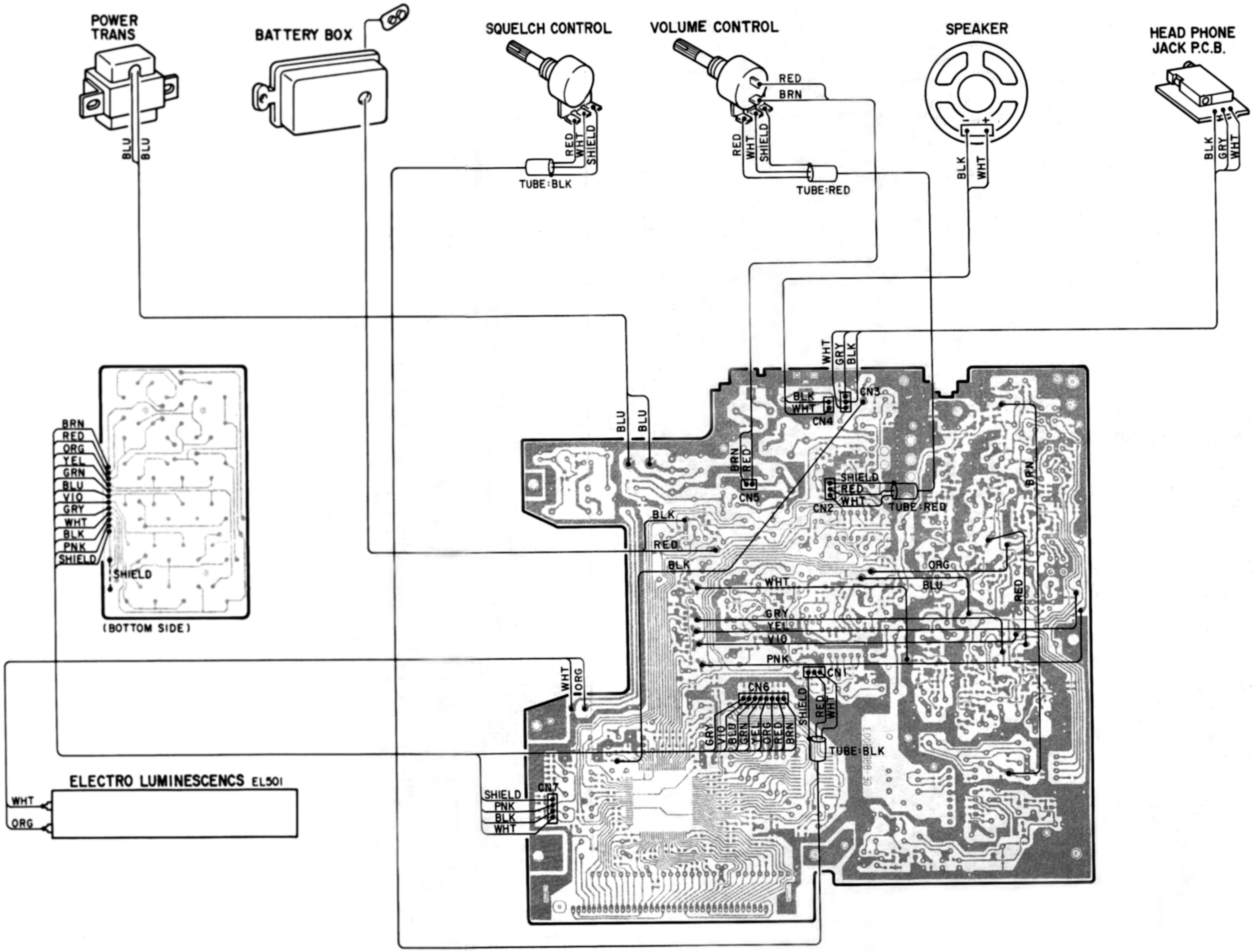

WIRING DIAGRAM

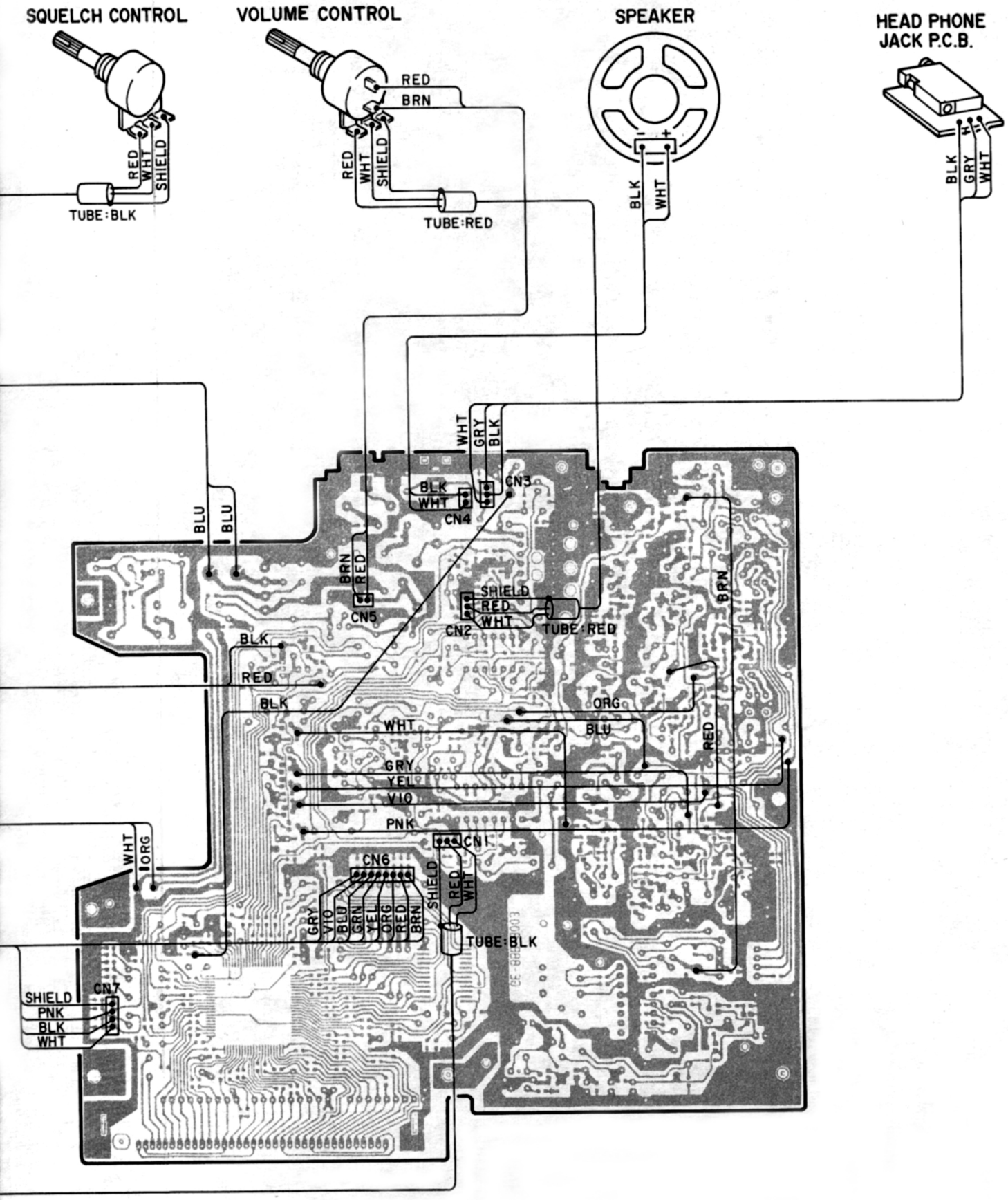

Remove four screws (29) and detach the cabinets (6) and (7).

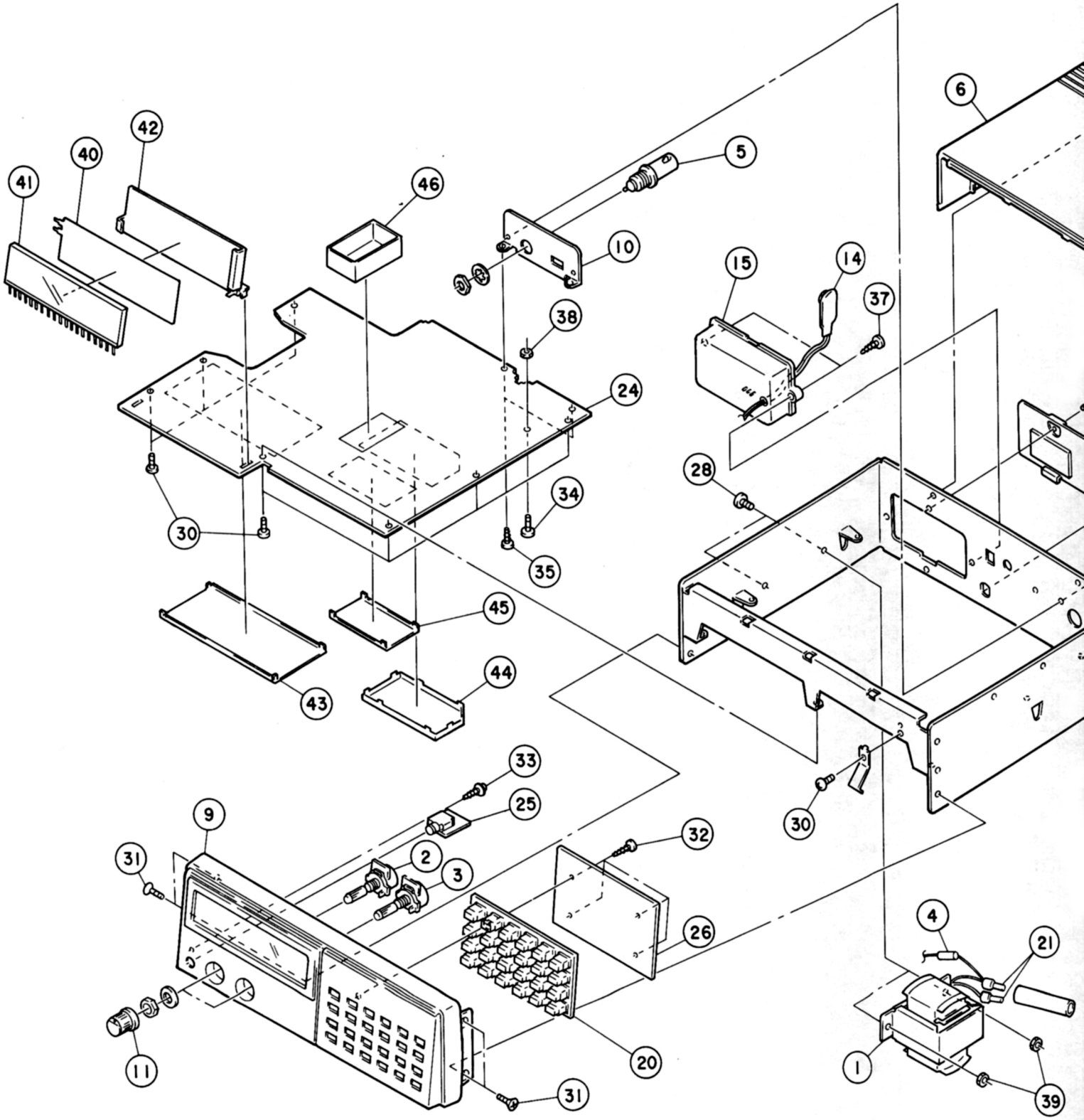

DISASSEMBLY/EXPLODED VIEW

Remove four screws (29) and detach the cabinets (6) and (7).

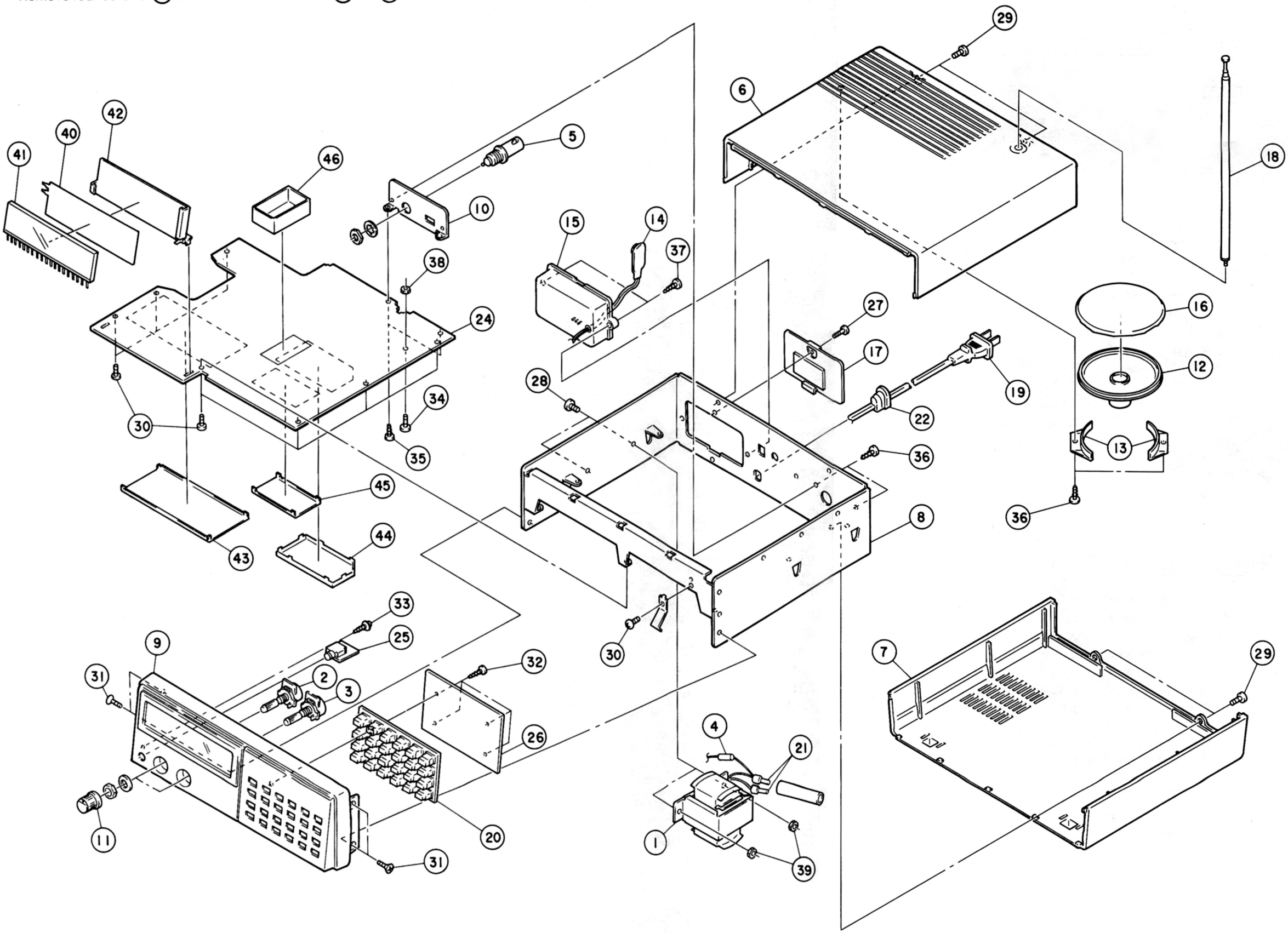

SSEMBLY/EXPLODED VIEW

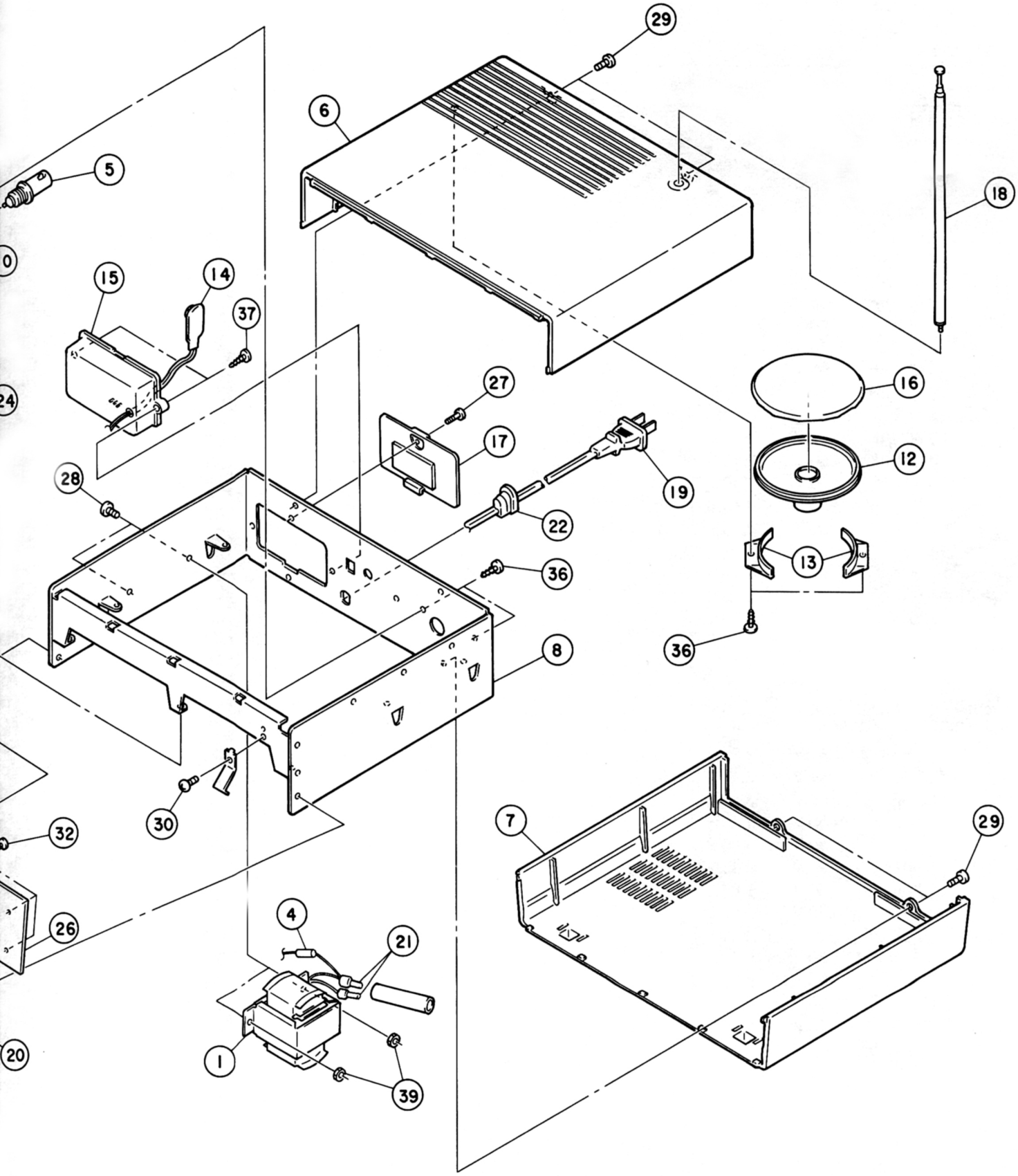

Electrical Parts List

Main Board Assembly

Ref. No.	Description				RS Part No.	MFR's Part No.
㉔	**PCB Assembly, Main Board Consists of the forllowing:**					
	Capacitors					
C1	Chip	0.001 μF	50 V	±10%		C3K21N1HR102K
C2	Chip	0.01 μF	50 V	±10%		C3K21N1HR103K
C3	Chip	0.001 μF	50 V	±10%		C3K21N1HR102K
C4	Chip	0.001 μF	50 V	±10%		C3K21N1HR102K
C5	Chip	0.001 μF	50 V	±10%		C3K21N1HR102K
C6	Chip	0.01 μF	50 V	±10%		C3K21N1HR103K
C7	Chip	0.001 μF	50 V	±10%		C3K21N1HR102K
C8	Chip	0.001 μF	50 V	±10%		C3K21N1HR102K
C9	Chip	0.001 μF	50 V	±10%		C3K21N1HR102K
C10	Chip	3 pF	50 V	±0.25 pF		C2C21N1HSL030C
C11	Chip	0.001 μF	50 V	±10%		C3K21N1HR102K
C12	Chip	0.001 μF	50 V	±10%		C3K21N1HR102K
C13	Chip	0.001 μF	50 V	±10%		C3K21N1HR102K
C14	Chip	22 pF	50 V	±10%		C2C21N1HSL220K
C15	Chip	0.001 μF	50 V	±10%		C3K21N1HR102K
C16	Chip	0.001 μF	50 V	±10%		C3K21N1HR102K
C17	Chip	0.001 μF	50 V	±10%		C3K21N1HR102K
C18	Chip	0.001 μF	50 V	±10%		C3K21N1HR102K
C19	Chip	0.001 μF	50 V	±10%		C3K21N1HR102K
C20	Chip	10 pF	50 V	±0.5 pF		C2C21N1HSL100D
C21	Chip	0.001 μF	50 V	±10%		C3K21N1HR102K
C22	Chip	0.001 μF	50 V	±10%		C3K21N1HR102K
C23	Chip	100 pF	50 V	±10%		C2C21N1HSL101K
C24	Chip	0.001 μF	50 V	±10%		C3K21N1HR102K
C25	Chip	0.01 μF	50 V	±10%		C3K21N1HR103K
C26	Chip	0.01 μF	50 V	±10%		C3K21N1HR103K
C27	Chip	0.001 μF	50 V	±10%		C3K21N1HR102K
C28	Chip	2 pF	50 V	±0.25 pF		C2C21N1HSL020C
C29	Chip	5 pF	50 V	±0.25 pF		C2C21N1HSL050C
C30	Chip	0.001 μF	50 V	±10%		C3K21N1HR102K
C31	Ceramic	10 pF	50 V	± 0.5 pF		HE40SJSL100F
C32	Chip	33 pF	50 V	±10%		C2C21N1HSL330K
C33	Chip	0.001 μF	50 V	±10%		C3K21N1HR102K
C34	Chip	0.001 μF	50 V	±10%		C3K21N1HR102K
C35	Chip	10 pF	50 V	±0.5 pF		C2C21N1HSL100D
C36	Chip	1 pF	50 V	±0.25 pF		C2C21N1HSL010C
C37	Ceramic	10 pF	50 V	± 0.5 pF		HE40SJSL100F
C38	Chip	0.001μF	50 V	±10%		C3K21N1HR102K
C39	Chip	1 pF	50 V	±0.25 pF		C2C21N1HSL010C
C40	Chip	0.001 μF	50 V	±10%		C3K21N1HR102K
C41	Electrolytic	10 μF	16 V	±20%		ECEA1CU100
C42	Chip	0.001 μF	50 V	±10%		C3K21N1HR102K
C43	Chip	0.001 μF	50 V	±10%		C3K21N1HR102K
C44	Chip	33 pF	50 V	±10%		C2C21N1HSL330K
C45	Chip	33 pF	50 V	±10%		C2C21N1HSL330K
C46	Chip	47 pF	50 V	±10%		C2C21N1HSL470K
C47	Chip	5 pF	50 V	±0.25 pF		C2C21N1HSL050C

Ref. No.	Description				RS Part No.	MFR's Part No.
C48	Chip	470 pF	50 V	±10%		C2C21N1HSL471K
C49	Chip	0.001 μF	50 V	±10%		C3K21N1HR102K
C50	Chip	470 pF	50 V	±10%		C2C21N1HSL471K
C51	Chip	0.001 μF	50 V	±10%		C3K21N1HR102K
C52	Chip	47 pF	50 V	±10%		C2C21N1HSL470K
C53	Chip	15 pF	50 V	±10%		C2C21N1HSL150K
C54	Chip	5 pF	50 V	±0.25 pF		C2C21N1HSL050C
C55	Chip	10 pF	50 V	±0.5 pF		C2C21N1HSL100D
C56	Chip	5 pF	50 V	±0.25 pF		C2C21N1HSL050C
C57	Chip	0.001 μF	50 V	±10%		C3K21N1HR102K
C58	Chip	0.001 μF	50 V	±10%		C3K21N1HR102K
C59	Chip	3 pF	50 V	±0.25 pF		C2C21N1HSL030C
C60	Chip	1 pF	50 V	±0.25 pF		C2C21N1HSL010C
C61	Chip	33 pF	50 V	±10%		C2C21N1HSL330K
C62	Chip	2 pF	50 V	±0.25 pF		C2C21N1HSL020C
C63	Chip	5 pF	50 V	±0.25 pF		C2C21N1HSL050C
C64	Chip	33 pF	50 V	±10%		C2C21N1HSL330K
C65	Chip	2 pF	50 V	±0.25 pF		C2C21N1HSL020C
C66	Chip	33 pF	50 V	±10%		C2C21N1HSL330K
C67	Chip	7 pF	50 V	±0.5 pF		C2C21N1HSL070D
C68	Chip	5 pF	50 V	±0.25 pF		C2C21N1HSL050C
C69	Chip	33 pF	50 V	±10%		C2C21N1HSL330K
C70	Chip	33 pF	50 V	±10%		C2C21N1HSL330K
C71	Chip	100 pF	50 V	±10%		C2C21N1HSL101K
C72	Chip	10 pF	50 V	±0.5 pF		C2C21N1HSL100D
C73	Chip	12 pF	50 V	±10%		C2C21N1HSL120K
C74	Chip	6 pF	50 V	±0.5 pF		C2C21N1HSL060D
C75	Chip	10 pF	50 V	±0.5 pF		C2C21N1HSL100D
C76	Chip	5 pF	50 V	±0.25 pF		C2C21N1HSL050C
C77	Chip	10 pF	50 V	±0.5 pF		C2C21N1HSL100D
C78	Chip	6 pF	50 V	±0.5 pF		C2C21N1HSL060D
C79	Chip	5 pF	50 V	±0.25 pF		C2C21N1HSL050C
C80	Chip	0.001 μF	50 V	±10%		C3K21N1HR102K
C81	Chip	0.01 μF	50 V	±10%		C3K21N1HR103K
C82	Tantalum	0.22 μF	35 V	±10%		TSD-A-1V0R22K
* C83	Mylar	0.01 μF	50 V	±10%		AMZ-103K50
C84	Chip	18 pF	50 V	±10%		C2C21N1HSL180K
C85	Chip	0.001 μF	50 V	±10%		C3K21N1HR102K
C86	Chip	470 pF	50 V	±10%		C2C21N1HSL471K
C87	Chip	0.001 μF	50 V	±10%		C3K21N1HR102K
C88	Mylar	0.033 μF	50 V	±10%		AMZ-333K50
C89	Mylar	0.033 μF	50 V	±10%		AMZ-333K50
C90	Chip	0.1 μF	25 V	+80%–20%		C3K21N1EF104Z
C91	Tantalum	0.1 μF	35 V	±10%		TSD-A-1V0R1K
C92	Chip	82 pF	50 V	±10%		C2C21N1HSL820K
C93	Chip	120 pF	50 V	±10%		C2C21N1HSL121K
C94	Chip	22 pF	50 V	±10%		C2C21N1HSL220K
C95	Chip	0.1 μF	25 V	+80%–20%		C3K21N1EF104Z
C96	Chip	0.1 μF	25 V	+80%–20%		C3K21N1EF104Z
C97	Chip	0.1 μF	25 V	+80%–20%		C3K21N1EF104Z
C98	Electrolytic	220 μF	6.3 V	±20%		ECEA0JK221

* Mylar is a registered trademark of E.I. Du pont de Nemours and Company.

Ref. No.	Description				RS Part No.	MFR's Part No.
C99	Chip	470 pF	50 V	± 10%		C2C21N1HSL471K
C100	Chip	0.047 μF	25 V	± 10%		C3K21N1EB473K
C101	Electrolytic	47 μF	16 V	± 20%		ECEA1CU470
C102	Electrolytic	10 μF	16 V	± 20%		ECEA1CU100
C103	Chip	0.01 μF	50 V	± 10%		C3K21N1HR103K
C104	Chip	0.047 μF	25 V	± 10%		C3K21N1EB473K
C105	Electrolytic	10 μF	16 V	± 20%		ECEA1CU100
C106	Mylar	0.047 μF	50 V	± 10%		AMZ-473K50
C107	Mylar	0.033 μF	50 V	± 10%		AMZ-333K50
C108	Electrolytic	1 μF	50 V	± 20%		ECEA1HU010
C109	Chip	0.1 μF	25 V	+80%–20%		C3K21N1EF104Z
C110	Chip	0.01 μF	50 V	± 10%		C3K21N1HR103K
C111	Chip	0.001 μF	50 V	± 10%		C3K21N1HR102K
C112	Electrolytic	1 μF	50 V	± 20%		ECEA1HU010
C113	Chip	0.1 μF	25 V	+80%–20%		C3K21N1EF104Z
C114	Electrolytic	10 μF	16 V	± 20%		ECEA1CU100
C115	Chip	0.001 μF	50 V	± 10%		C3K21N1HR102K
C116	Electrolytic	1000 μF	25 V	± 20%		ECEA1EU102
C117	Chip	0.0047 μF	50 V	± 10%		C3K21N1HR472K
C118	Chip	0.0047 μF	50 V	± 10%		C3K21N1HR472K
C119	Chip	0.0047 μF	50 V	± 10%		C3K21N1HR472K
C120	Chip	0.1 μF	25 V	+80%–20%		C3K21N1EF104Z
C121	Electrolytic	10 μF	16 V	± 20%		ECEA1CU100
C122	Electrolytic	47 μF	16 V	± 20%		ECEA1CU470
C123	Electrolytic	10 μF	16 V	± 20%		ECEA1CU100
C124	Mylar	0.1 μF	50 V	± 10%		AMZ-104K50
C125	Electrolytic	100 μF	16 V	± 20%		ECEA1CU101
C126	Mylar	0.1 μF	50 V	± 10%		AMZ-104K50
C127	Electrolytic	100 μF	10 V	± 20%		ECEA1AU101
C128	Electrolytic	100 μF	10 V	± 20%		ECEA1AU101
C129	Mylar	0.047 μF	50 V	± 10%		AMZ-473K50
C130	Tantalum	6.8 μF	10 V	± 10%		TSD-A-1A6R8K
C131	Chip	0.001 μF	50 V	± 10%		C3K21N1HR102K
C132	Chip	0.001 μF	50 V	± 10%		C3K21N1HR102K
C133	Chip	0.001 μF	50 V	± 10%		C3K21N1HR102K
C134	Chip	0.1 μF	25 V	+80%–20%		C3K21N1EF104Z
C135	Chip	0.001 μF	50 V	± 10%		C3K21N1HR102K
C136	Chip	0.001 μF	50 V	± 10%		C3K21N1HR102K
C137	Chip	0.1 μF	25 V	+80%–20%		C3K21N1EF104Z
C138	Chip	100 pF	50 V	± 10%		C2C21N1HSL101K
C139	Chip	0.001 μF	50 V	± 10 %		C3K21N1HR102K
C140	Chip	0.001 μF	50 V	± 10%		C3K21N1HR102K
C141	Electrolytic	0.1 μF	50 V	± 20%		ECEA1HU0R1
C142	Electrolytic	10 μF	16 V	± 20%		ECEA1CU100
C143	Chip	0.01 μF	50 V	± 10%		C3K21N1HR103K
C144	Electrolytic	47 μF	16 V	± 20%		ECEA1CU470
C145	Electrolytic	0.1 μF	50 V	± 20%		ECEA1HU0R1
C146	Electrolytic	2200 μF	25 V	± 20%		ECEA1ESS222
C147	Chip	0.01 μF	50 v	± 10%		C3K21N1HR103K
C148	Chip	0.01 μF	50 V	± 10%		C3K21N1HR103K
C149	Chip	100 pF	50 V	± 10%		C2C21N1HSL101K

Ref. No.	Description				RS Parts No.	MFR's Part No.
C150	Chip	100 pF	50 V	±10%		C2C21N1HSL101K
C151	Chip	100 pF	50 V	±10%		C2C21N1HSL101K
C152	Chip	100 pF	50 V	±10%		C2C21N1HSL101K
C153	Chip	100 pF	50 V	±10%		C2C21N1HSL101K
C154	Chip	100 pF	50 V	±10%		C2C21N1HSL101K
C155	Chip	100 pF	50 V	±10%		C2C21N1HSL101K
C156	Chip	100 pF	50 V	±10 %		C2C21N1HSL101K
C157	Chip	100 pF	50 V	±10%		C2C21N1HSL101K
C158	Chip	0.001 μF	50 V	±10%		C3K21N1HR102K
C159	Chip	100 pF	50 V	±10%		C2C21N1HSL101K
C160	Chip	100 pF	50 V	±10%		C2C21N1HSL101K
C161	Chip	100 pF	50 V	±10%		C2C21N1HSL101K
C162	Chip	100 pF	50 V	±10%		C2C21N1HSL101K
C163	Chip	100 pF	50 V	±10%		C2C21N1HSL101K
C164	Chip	100 pF	50 V	±10%		C2C21N1HSL101K
C165	Chip	100 pF	50 V	±10%		C2C21N1HSL101K
C166	Chip	100 pF	50 V	±10%		C2C21N1HSL101K
C167	Chip	0.1 μF	25 V	+80%–20%		C3K21N1EF104Z
C168	Electrolytic	4.7 μF	50 V	±20%		ECEA1HU4R7
C169	Chip	0.001 μF	50 V	±10%		C3K21N1HR102K
C170	Chip	100 pF	50 V	±10%		C2C21N1HSL101K
C171	Chip	100 pF	50 V	±10%		C2C21N1HSL101K
C172	Chip	100 pF	50 V	±10%		C2C21N1HSL101K
C173	Chip	0.001 μF	50 V	±10%		C3K21N1HR102K
C174	Chip	0.001 μF	50 V	±10%		C3K21N1HR102K
C175	Chip	0.001 μF	50 V	±10%		C3K21N1HR102K
C176	Chip	0.001 μF	50 V	±10%		C3K21N1HR102K
C177	Chip	0.001 μF	50 V	±10%		C3K21N1HR102K
C178	Chip	0.001 μF	50 V	±10%		C3K21N1HR102K
C179	Chip	0.001 μF	50 V	±10%		C3K21N1HR102K
C180	Chip	0.001 μF	50 V	±10%		C3K21N1HR102K
C181	Chip	0.001 μF	50 V	±10%		C3K21N1HR102K
C182	Chip	0.001 μF	50 V	±10%		C3K21N1HR102K
C183	Chip	0.001 μF	50 V	±10%		C3K21N1HR102K
C184	Chip	0.001 μF	50 V	±10%		C3K21N1HR102K
C185	Chip	0.001 μF	50 V	±10%		C3K21N1HR102K
C186	Electrolytic	47 μF	16 V	±20%		ECEA1CU470
C187	Chip	0.001 μF	50 V	±10%		C3K21N1HR102K
C188	Electrolytic	10 μF	16 V	±20%		ECEA1CU100
C189	Electrolytic	0.47 μF	50 V	±20%		ECEA1HUR47
C190	Electrolytic	4.7 μF	50 V	±20%		ECEA1HU4R7
C191	Chip	0.001 μF	50 V	±10%		C3K21N1HR102K
C192	Chip	0.001 μF	50 V	±10%		C3K21N1HR102K
C193	Chip	0.001 μF	50 V	±10%		C3K21N1HR102K
C194	Chip	0.1 μF	25 V	+80%–20%		C3K21N1EF104Z
C195	Chip	0.1 μF	25 V	+80%–20%		C3K21N1EF104Z
C196	Chip	56 pF	50 V	±10%		C2C21N1HUJ560K
C197	Chip	39 pF	50 V	±10%		C2C21N1HSL390K
C198	Electrolytic	10 μF	16 V	±20%		ECEA1CU100
C199	Chip	100 pF	50 V	±10%		C2C21N1HSL101K
C200	Mylar	0.047 μF	50 V	±10%		AMZ-473K50

Ref. No.	Description				RS Part No.	MFR's Part No.
C201	Mylar	0.01 μF	50 V	±10%		AMZ-103K50
C202	Chip	0.001 μF	50 V	±10%		C3K21N1HR102K
C203	Chip	0.001 μF	50 V	±10%		C3K21N1HR102K
C204	Chip	10 pF	50 V	±0.5 pF		C2C21N1HSL100D
C205	Chip	0.001 μF	50 V	±10%		C3K21N1HR102K
C206	Chip	0.01 μF	50 V	±10%		C3K21N1HR103K
C207	Chip	0.001 μF	50 V	±10%		C3K21N1HR102K
C208	Chip	2 pF	50 V	±0.25 pF		C2C21N1HSL020C
C209	Chip	0.001 μF	50 V	±10%		C3K21N1HR102K
C210	Chip	0.001 μF	50 V	±10%		C3K21N1HR102K
C211	Chip	0.001 μF	50 V	±10%		C3K21N1HR102K
C212	Chip	0.001 μF	50 V	±10%		C3K21N1HR102K
C213	Chip	0.001 μF	50 V	±10%		C3K21N1HR102k
C214	Chip	0.001 μF	50 V	±5%		C3K21N1HR102K
C215	Tantalum	0.22 μF	35V	±10%		TSD-A-1V0R22K
	Capacitor Array					
CB1		0.01 μF x 2	250 V	+80%–20%		EXR-FS203ZS
CB2		0.01 μF x 2	250 V	+80%–20%		EXR-FS203ZS
CB3		0.001 μF x 8	50 V	+80%–20%		EXFP8102ZW
CB4		0.001 μF x 8	50 V	+80%–20%		EXFP8102ZW
CB5		0.001 μF x 8	50 V	+80%–20%		EXFP8102ZW
	Ceramic Filter					
CF1		Ceramic		455 kHz		KBF-455P-15A
	Ceramic Resonator					
CX1		EFO-GC2004A4				EFO-GC2004A4
	Diodes					
D1	Varactor	BB609A	(Silicon)			BB609A
D2	Varactor	1SS168	(Silicon)			1SS168
D3	Varactor	BB609A	(Silicon)			BB609A
D4	Varactor	1SS168	(Silicon)			1SS168
D5	Varactor	1SS168	(Silicon)			1SS168
D6	Varactor	1SV136A	(Silicon)			1SV136A
D7	Varactor	1SS168	(Silicon)			1SS168
D8	Varactor	1SS168	(Silicon)			1SS168
D9	Varactor	1SS168	(Silicon)			1SS168
D10	Varactor	1SV136A	(Silicon)			1SV136A
D11		1S2076A	(Silicon)			1S2076A
D12		1S2076A	(Silicon)			1S2076A
D13	Varactor	1SV146	(Silicon)			1SV146

Ref. No.	Description			RS Part No.	MFR's Part No.
D14	Varactor	1SV146	(Silicon)		1SV146
D15	Varactor	BB609A	(Silicon)		BB609A
D16	Varactor	BB609A	(Silicon)		BB609A
D17	Varactor	1SV146	(Silicon)		1SV146
D18	Varactor	1SV146	(Silicon)		1SV146
D19		HSM-2692	(Silicon)		HSM-2692
D20		1S2076A	(Silicon)		1S2076A
D21		1S2076A	(Silicon)		1S2076A
D22		1S2076A	(Silicon)		1S2076A
D23		1S2076A	(Silicon)		1S2076A
D24		1S2076A	(Silicon)		1S2076A
D25	Varactor	1SV146	(Silicon)		1SV146
D26	Varactor	1SV146	(Silicon)		1SV146
D27		1K261	(Germanium)		1K261
D28		1K261	(Germanium)		1K261
D29		1K261	(Germanium)		1K261
D30		1K261	(Germanium)		1K261
D31		1S2076A	(Silicon)		1S2076A
D32		1S2076A	(Silicon)		1S2076A
D33		1S2076A	(Silicon)		1S2076A
D34		1S2076A	(Silicon)		1S2076A
D35		1S2076A	(Silicon)		1S2076A
D36		1S2076A	(Silicon)		1S2076A
D37		1S2076A	(Silicon)		1S2076A
D38	Zener	HZ12C2L	(Silicon)		HZ12C2L
D39		1S2076A	(Silicon)		1S2076A
D40		1S2076A	(Silicon)		1S2076A
D41	Zener	HZ4BLL	(Silicon)		HZ4BLL
D42	Not Used				
D43		1S2076A	(Silicon)		1S2076A
D44		1S2076A	(Silicon)		1S2076A
D45	Not Used				
D46		1S2076A	(Silicon)		1S2076A
D47		1S2076A	(Silicon)		1S2076A
D48		1S2076A	(Silicon)		1S2076A
D49		1S2076A	(Silicon)		1S2076A
D50		1S2076A	(Silicon)		1S2076A
D51		1S2076A	(Silicon)		1S2076A
D52		1S2076A	(Silicon)		1S2076A
D53		1S2076A	(Silicon)		1S2076A
D54	Zener	HZ7B2L	(Silicon)		HZ7B2L
D55		1S2076A	(Silicon)		1S2076A
D56	Zener	HZ16-3L	(Silicon)		HZ16-3L
D57		S5277B	(Silicon)		S5277B
D58	Not Used				
D59	Not Used				
D60		RS102	(Silicon)		RS102
	Diode Array				
DA1		HSM2693	(Silicon)		HSM2693

Ref. No.	Description	RS Part No.	MFR's Part No.
	ICs		
IC1	MC3361N FM IF Amp.		MC3361N
IC2	μPC324C AF Amp.		μPC324C
IC3	TDA1905 Audio Amp.		TDA1905
IC4	S81250HG Voltage Regulator		S81250HG
IC5	MC7805CT Voltage Regulator		MC7895CT
IC6	TC5517CF-20 or LC3517BM RAM 16K		TC5517CF-20 or LC3517BML-10
IC7	GRE0620A CPU		GRE0620-A
IC8	MB1501P-G PLL		MB1501P-G
IC9	TC4S66F Analog Switch		TC4S66F
	Coils & Inductors		
L1	Coil, Choke 0.22 μH		LAL03TAR22M
L2	Coil, RF		4LNC-092
L3	Coil, RF		4LNC-122
L4	Coil, RF (UHF Lo)		8LNR-093
L5	Coil, RF		4LNC-122
L6	Coil, RF (UHF Lo)		8LNR-093
L7	Coil, Choke 0.22 μH		LAL03TAR22M
L8	Coil, RF (UHF Lo)		8LNR-093
L9	Coil, RF (UHF Hi)		GE-87D-7120
L10	Coil, RF (UHF Hi)		GE-87D-7120
L11	Coil, RF		2LNB-253
L12	Coil, RF (UHF Hi)		GE-87D-7120
L13	Coil, VCO (UHF Hi)		2LNB-252
L14	Stripline on PCB		
L15	Coil, Choke 10 μH		LAL03TA100K
L16	Coil, Choke 10 μH		LAL03TA100K
L17	Coil, Choke		3B-037
L18	Coil, Choke 10 μH		LAL03TA100K
L19	Coil, Choke 10 μH		LAL03TA100K
	Transistors		
Q1	FET 3SK131A MOS		3SK131A
Q2	Chip 2SC2712(Y) NPN		2SC2712(Y)
Q3	FET 3SK131A MOS		3SK131A
Q4	Chip 2SC3356 NPN		2SC3356
Q5	2SC2732 NPN		2SC2732
Q6	Chip 2SC2714(O) NPN		2SC2714(O)
Q7	Chip 2SC2712(GR) NPN		2SC2712(GR)
Q8	Chip 2SC2714(O) NPN		2SC2714(O)
Q9	Chip 2SC2714(O) NPN		2SC2714(O)
Q10	Chip 2SC2712(GR) NPN		2SC2712(GR)
Q11	Chip 2SC3356 NPN		2SC3356

Ref. No.	Description				RS Part No.	MFR's Part No.
Q12	Chip	2SC3356	NPN			2SC3356
Q13	Chip	2SC3356	NPN			2SC3356
Q14	Chip	2SC3356	NPN			2SC3356
Q15	Chip	2SC3356	NPN			2SC3356
Q16	Chip	2SC3356	NPN			2SC3356
Q17	Chip	2SC2712(GR)	NPN			2SC2712(GR)
Q18	Chip	2SC2714(O)	NPN			2SC2714(O)
Q19	FET	2SK208(O)	MOS			2SK208(O)
Q20	Chip	2SC2712(GR)	NPN			2SC2712(GR)
Q21	Chip	2SC2712(GR)	NPN			2SC2712(GR)
Q22	Chip	2SC2712(O)	NPN			2SC2712(O)
Q23	Chip	2SC2712(O)	NPN			2SC2712(O)
Q24	Not Used					
Q25		2SC1623	NPN			2SC1623
Q26	Chip	RN2402	PNP			RN2402
Q27	Chip	RN2402	PNP			RN2402
Q28	Chip	RN2402	PNP			RN2402
Q29	Chip	RN2402	PNP			RN2402
Q30	Chip	2SC2712(GR)	NPN			2SC2712(GR)
Q31	Chip	RN2402	PNP			RN2402
Q32	Chip	RN2402	PNP			RN2402
Q33	Chip	2SC2712(GR)	NPN			2SC2712(GR)
Q34	Chip	2SC2712(GR)	NPN			2SC2712(GR)
Q35	Chip	2SC2712(GR)	NPN			2SC2712(GR)
Q36	FET	2SK209(Y)	MOS			2SK209(Y)
Q37	Chip	2SC2712(GR)	NPN			2SC2712(GR)
Q38	FET	2SK209(Y)	MOS			2SK209(Y)
	Resistors					
R1	Chip	100 ohm	1/10 W	±5%		RCM101J55
R2	Chip	100 ohm	1/10 W	±5%		RCM101J55
R3	Chip	22 kohm	1/10 W	±5%		RCM223J55
R4	Chip	100 kohm	1/10 W	±5%		RCM104J55
R5	Carbon Film	100 ohm	1/8 W	±5%		ERD10TJ101
R6	Chip	100 kohm	1/10 W	±5%		RCM104J55
R7	Chip	100 ohm	1/10 W	±5%		RCM101J55
R8	Chip	22 kohm	1/10 W	±5%		RCM223J55
R9	Chip	100 ohm	1/10 W	±5%		RCM101J55
R10	Chip	22 kohm	1/10 W	±5%		RCM223J55
R11	Chip	4.7 kohm	1/10 W	±5%		RCM472J55
R12	Chip	47 kohm	1/10 W	±5%		RCM473J55
R13	Chip	4.7 kohm	1/10 W	±5%		RCM472J55
R14	Chip	47 kohm	1/10 W	±5%		RCM473J55
R15	Chip	4.7 kohm	1/10 W	±5%		RCM472J55
R16	Chip	100 kohm	1/10 W	±5%		RCM104J55
R17	Chip	220 ohm	1/10 W	±5%		RCM221J55
R18	Chip	10 ohm	1/10 W	±5%		RCM100J55

Ref. No.	Description				RS Part No.	MFR's Parts No.
R19	Chip	10 ohm	1/10 W	±5%		RCM100J55
R20	Chip	100 kohm	1/10 W	±5%		RCM104J55
R21	Chip	10 ohm	1/10 W	±5%		RCM100J55
R22	Carbon Film	100 ohm	1/8 W	±5%		ERD10TJ101
R23	Chip	100 ohm	1/10 W	±5%		RCM101J55
R24	Chip	100 kohm	1/10 W	±5%		RCM104J55
R25	Chip	47 kohm	1/10 W	±5%		RCM473J55
R26	Chip	47 kohm	1/10 W	±5%		RCM473J55
R27	Chip	2.2 kohm	1/10 W	±5%		RCM222J55
R28	Carbon Film	22 ohm	1/8 W	±5%		ERD10TJ220
R29	Carbon Film	100 ohm	1/8 W	±5%		ERD10TJ101
R30	Chip	47 kohm	1/10 W	±5%		RCM473J55
R31	Chip	470 ohm	1/10 W	±5%		RCM471J55
R32	Chip	4.7 kohm	1/10 W	±5%		RCM472J55
R33	Chip	10 kohm	1/10 W	±5%		RCM103J55
R34	Chip	10 ohm	1/10 W	±5%		RCM100J55
R35	Carbon Film	100 ohm	1/8 W	±5%		ERD10TJ101
R36	Chip	47 kohm	1/10 W	±5%		RCM473J55
R37	Chip	1 Mohm	1/10 W	±5%		RCM105J55
R38	Carbon Film	22 ohm	1/8 W	±5%		ERD10TJ220
R39	Chip	2.2 kohm	1/10 W	±5%		RCM222J55
R40	Carbon Film	47 kohm	1/8 W	±5%		ERD10TJ473
R41	Chip	15 kohm	1/10 W	±5%		RCM153J55
R42	Chip	22 kohm	1/10 W	±5%		RCM223J55
R43	Chip	1 kohm	1/10 W	±5%		RCM102J55
R44	Chip	470 ohm	1/10 W	±5%		RCM471J55
R45	Carbon Film	10 kohm	1/8 W	±5%		ERD10TJ103
R46	Chip	100 ohm	1/10 W	±5%		RCM101J55
R47	Chip	100 kohm	1/10 W	±5%		RCM104J55
R48	Chip	100 ohm	1/10 W	±5%		RCM101J55
R49	Chip	47 ohm	1/10 W	±5%		RCM470J55
R50	Chip	22 kohm	1/10 W	±5%		RCM223J55
R51	Carbon Film	10 kohm	1/8 W	±5%		ERD10TJ103
R52	Chip	15 kohm	1/10 W	±5%		RCM153J55
R53	Chip	22 kohm	1/10 W	±5%		RCM223J55
R54	Chip	1.5 kohm	1/10 W	±5%		RCM152J55
R55	Chip	220 ohm	1/10 W	±5%		RCM221J55
R56	Chip	1 kohm	1/10 W	±5%		RCM102J55
R57	Chip	470 kohm	1/10 W	±5%		RCM474J55
R58	Chip	470 ohm	1/10 W	±5%		RCM471J55
R59	Carbon Film	10 kohm	1/8 W	±5%		ERD10TJ103
R60	Chip	47 kohm	1/10 W	±5%		RCM473J55
R61	Chip	100 ohm	1/10 W	±5%		RCM101J55
R62	Chip	1 kohm	1/10 W	±5%		RCM102J55
R63	Chip	100 kohm	1/10 W	±5%		RCM104J55
R64	Chip	47 kohm	1/10 W	±5%		RCM473J55
R65	Chip	100 ohm	1/10 W	±5%		RCM101J55
R66	Chip	3.3 kohm	1/10 W	±5%		RCM332J55
R67	Chip	1 kohm	1/10 W	±5%		RCM102J55
R68	Chip	10 kohm	1/10 W	±5%		RCM103J55
R69	Chip	47 ohm	1/10 W	±5%		RCM470J55

Ref. No.	Description				RS Part No.	MFR's Part No.
R70	Chip	4.7 kohm	1/10 W	±5%		RCM472J55
R71	Chip	10 kohm	1/10 W	±5%		RCM103J55
R72	Carbon Film	100 ohm	1/8 W	±5%		ERD10TJ101
R73	Carbon Film	1 Mohn	1/8 W	±5%		ERD10TJ105
R74	Carbon Film	22 ohm	1/8 W	±5%		ERD10TJ220
R75	Chip	100 ohm	1/10 W	±5%		RCM101J55
R76	Carbon Film	10 kohm	1/8 W	±5%		ERD10TJ103
R77	Chip	15 kohm	1/10 W	±5%		RCM153J55
R78	Chip	22 kohm	1/10 W	±5%		RCM223J55
R79	Chip	100 ohm	1/10 W	±5%		RCM101J55
R80	Chip	1 kohm	1/10 W	±5%		RCM102J55
R81	Chip	100 kohm	1/10 W	±5%		RCM104J55
R82	Carbon Film	1 kohm	1/8 W	±5%		ERD10TJ102
R83	Chip	100 ohm	1/10 W	±5%		RCM101J55
R84	Carbon Film	10 kohm	1/8 W	±5%		ERD10TJ103
R85	Carbon Film	47 kohm	1/8 W	±5%		ERD10TJ473
R86	Chip	220 kohm	1/10 W	±5%		RCM224J55
R87	Chip	3.9 kohm	1/10 W	±5%		RCM392J55
R88	Chip	1 kohm	1/10 W	±5%		RCM102J55
R89	Chip	2.2 kohm	1/10 W	±5%		RCM222J55
R90	Chip	1 kohm	1/10 W	±5%		RCM102J55
R91	Chip	33 kohm	1/10 W	±5%		RCM333J55
R92	Chip	100 kohm	1/10 W	±5%		RCM104J55
R93	Chip	15 kohm	1/10 W	±5%		RCM153J55
R94	Chip	4.7 kohm	1/10 W	±5%		RCM472J55
R95	Chip	1 Mohm	1/10 W	±5%		RCM105J55
R96	Chip	2.2 kohm	1/10 W	±5%		RCM222J55
R97	Chip	10 kohm	1/10 W	±5%		RCM103J55
R98	Chip	1 kohm	1/10 W	±5%		RCM102J55
R99	Chip	10 kohm	1/10 W	±5%		RCM103J55
R100	Chip	100 kohm	1/10 W	±5%		RCM104J55
R101	Carbon Film	47 kohm	1/8 W	±5%		ERD10TJ473
R102	Chip	22 kohm	1/10 W	±5%		RCM223J55
R103	Chip	3.3 kohm	1/10 W	±5%		RCM332J55
R104	Chip	1 kohm	1/10 W	±5%		RCM102J55
R105	Chip	47 ohm	1/10 W	±5%		RCM470J55
R106	Chip	270 kohm	1/10 W	±5%		RCM274J55
R107	Chip	5.6 kohm	1/10 W	±5%		RCM562J55
R108	Chip	470 ohm	1/10 W	±5%		RCM471J55
R109	Chip	100 ohm	1/10 W	±5%		RCM101J55
R110	Chip	270 kohm	1/10 W	±5%		RCM274J55
R111	Chip	5.6 kohm	1/10 W	±5%		RCM562J55
R112	Chip	47 ohm	1/10 W	±5%		RCM470J55
R113	Chip	10 kohm	1/10 W	±5%		RCM103J55
R114	Chip	4.7 kohm	1/10 W	±5%		RCM472J55
R115	Chip	10 kohm	1/10 W	±5%		RCM103J55
R116	Chip	220 kohm	1/10 W	±5%		RCM224J55
R117	Chip	10 kohm	1/10 W	±5%		RCM103J55
R118	Carbon Film	10 kohm	1/8 W	±5%		ERD10TJ103
R119	Chip	10 kohm	1/10 W	±5%		RCM103J55
R120	Chip	100 kohm	1/10 W	±5%		RCM104J55

Ref. No.	Description				RS Part No.	MFR's Part No.
R121	Chip	10 kohm	1/10 W	±5%		RCM103J55
R122	Chip	10 kohm	1/10 W	±5%		RCM103J55
R123	Chip	10 kohm	1/10 W	±5%		RCM103J55
R124	Chip	10 kohm	1/10 W	±5%		RCM103J55
R125	Chip	3.3 khm	1/10 W	±5%		RCM332J55
R126	Chip	100 kohm	1/10 W	±5%		RCM104J55
R127	Chip	10 kohm	1/10 W	±5%		RCM103J55
R128	Chip	10 kohm	1/10 W	±5%		RCM103J55
R129	Chip	22 kohm	1/10 W	±5%		RCM223J55
R130	Chip	47 kohm	1/10 W	±5%		RCM473J55
R131	Chip	1 Mohm	1/10 W	±5%		RCM105J55
R132	Chip	3.3 kohm	1/10 W	±5%		RCM332J55
R133	Chip	100 kohm	1/10 W	±5%		RCM104J55
R134	Chip	10 kohm	1/10 W	±5%		RCM103J55
R135	Chip	100 ohm	1/10 W	±5%		RCM101J55
R136	Chip	2.2 ohm	1/10 W	±10%		RCM2R2K55
R137	Chip	390 ohm	1/10 W	±5%		RCM391J55
R138	Chip	47 kohm	1/10 W	±5%		RCM473J55
R139	Chip	820 ohm	1/10 W	±5%		RCM821J55
R140	Chip	3.9 kohm	1/10 W	±5%		RCM392J55
R141	Chip	1.2 kohm	1/10 W	±5%		RCM122J55
R142	Chip	2.2 kohm	1/10 W	±5%		RCM222J55
R143	Chip	10 kohm	1/10 W	±5%		RCM103J55
R144	Chip	47 kohm	1/10 W	±5%		RCM473J55
R145	Carbon Film	56 ohm	1/8 W	±5%		ERD10TJ560
R146	Chip	22 ohm	1/10 W	±5%		RCM220J55
R147	Chip	6.8 kohm	1/10 W	±5%		RCM682J55
R148	Chip	150 ohm	1/10 W	±5%		RCM151J55
R149	Chip	47 kohm	1/10 W	±5%		RCM473J55
R150	Chip	10 kohm	1/10 W	±5%		RCM103J55
R151	Chip	47 kohm	1/10 W	±5%		RCM473J55
R152	Chip	47 kohm	1/10 W	±5%		RCM473J55
R153	Chip	47 kohm	1/10 W	±5%		RCM473J55
R154	Chip	47 kohm	1/10 W	±5%		RCM473J55
R155	Chip	47 kohm	1/10 W	±5%		RCM473J55
R156	Chip	10 kohm	1/10 W	±5%		RCM103J55
R157	Chip	100 kohm	1/10 W	±5%		RCM104J55
R158	Chip	1 kohm	1/10 W	±5%		RCM102J55
R159	Chip	470 ohm	1/10 W	±5%		RCM471J55
R160	Chip	10 kohm	1/10 W	±5%		RCM103J55
R161	Chip	100 kohm	1/10 W	±5%		RCM104J55
R162	Chip	470 kohm	1/10 W	±5%		RCM474J55
R163	Chip	470 kohm	1/10 W	±5%		RCM474J55
R164	Chip	2.2 Mohm	1/10 W	±5%		RCM225J55
R165	Chip	2.2 Mohm	1/10 W	±5%		RCM225J55
R166	Chip	4.7 kohm	1/10 W	±5%		RCM472J55
R167	Metal	4.7 ohm	1/2 W	±5%		ERQ12AJ4R7
R168	Metal	4.7 ohm	1/2 W	±5%		ERQ12AJ4R7
R169	Chip	10 kohm	1/10 W	±5%		RCM103J55
R170	Chip	10 kohm	1/10 W	±5%		RCM103J55

Ref. No.	Description				RS Part No.	MFR's Part No.
R171	Chip	1 kohm	1/10 W	±5%		RCM102J55
R172	Chip	1 kohm	1/10 W	±5%		RCM102J55
R173	Chip	1 kohm	1/10 W	±5%		RCM102J55
R174	Chip	1 kohm	1/10 W	±5%		RCM102J55
R175	Chip	1 kohm	1/10 W	±5%		RCM102J55
R176	Chip	1 kohm	1/10 W	±5%		RCM102J55
R177	Chip	1 kohm	1/10 W	±5%		RCM102J55
R178	Chip	1 kohm	1/10 W	±5%		RCM102J55
R179	Chip	1 kohm	1/10 W	±5%		RCM102J55
R180	Chip	1 kohm	1/10 W	±5%		RCM102J55
R181	Chip	1 kohm	1/10 W	±5%		RCM102J55
R182	Chip	1 kohm	1/10 W	±5%		RCM102J55
R183	Chip	1 kohm	1/10 W	±5%		RCM102J55
R184	Chip	1 kohm	1/10 W	±5%		RCM102J55
R185	Chip	1 kohm	1/10 W	±5%		RCM102J55
R186	Chip	1 kohm	1/10 W	±5%		RCM102J55
R187	Chip	1 kohm	1/10 W	±5%		RCM102J55
R188	Chip	1 kohm	1/10 W	±5%		RCM102J55
R189	Chip	1 kohm	1/10 W	±5%		RCM102J55
R190	Chip	1 kohm	1/10 W	±5%		RCM102J55
R191	Chip	1 kohm	1/10 W	±5%		RCM102J55
R192	Chip	1 kohm	1/10 W	±5%		RCM102J55
R193	Chip	1 kohm	1/10 W	±5%		RCM102J55
R194	Chip	1 kohm	1/10 W	±5%		RCM102J55
R195	Chip	1 kohm	1/10 W	±5%		RCM102J55
R196	Chip	1 kohm	1/10 W	±5%		RCM102J55
R197	Chip	100 kohm	1/10 W	±5%		RCM104J55
R198	Chip	1 kohm	1/10 W	±5%		RCM102J55
R199	Chip	1 kohm	1/10 W	±5%		RCM102J55
R200	Chip	1 kohm	1/10 W	±5%		RCM102J55
R201	Chip	47 kohm	1/10 W	±5%		RCM473J55
R202	Chip	1 kohm	1/10 W	±5%		RCM102J55
R203	Chip	47 kohm	1/10 W	±5%		RCM473J55
R204	Chip	1 kohm	1/10 W	±5%		RCM102J55
R205	Chip	1 kohm	1/10 W	±5%		RCM102J55
R206	Chip	47 kohm	1/10 W	±5%		RCM473J55
R207	Chip	1 kohm	1/10 W	±5%		RCM102J55
R208	Chip	47 kohm	1/10 W	±5%		RCM473J55
R209	Chip	1 kohm	1/10 W	±5%		RCM102J55
R210	Chip	47 kohm	1/10 W	±5%		RCM473J55
R211	Chip	1 kohm	1/10 W	±5%		RCM102J55
R212	Chip	47 kohm	1/10 W	±5%		RCM473J55
R213	Chip	1 kohm	1/10 W	±5%		RCM102J55
R214	Chip	1 kohm	1/10 W	±5%		RCM102J55
R215	Chip	1 kohm	1/10 W	±5%		RCM102J55
R216	Chip	1 kohm	1/10 W	±5%		RCM102J55
R217	Chip	1 kohm	1/10 W	±5%		RCM102J55
R218	Chip	1 kohm	1/10 W	±5%		RCM102J55
R219	Chip	1 kohm	1/10 W	±5%		RCM102J55
R220	Chip	1 kohm	1/10 W	±5%		RCM102J55
R221	Chip	1 kohm	1/10 W	±5%		RCM102J55

Ref. No.	Description				RS Part No.	MFR's Part No.
R222	Chip	1 kohm	1/10 W	±5%		RCM102J55
R223	Chip	1 kohm	1/10 W	±5%		RCM102J55
R224	Chip	1 kohm	1/10 W	±5%		RCM102J55
R225	Chip	1 kohm	1/10 W	±5%		RCM102J55
R226	Chip	1 kohm	1/10 W	±5%		RCM102J55
R227	Chip	1 kohm	1/10 W	±5%		RCM102J55
R228	Chip	1 kohm	1/10 W	±5%		RCM102J55
R229	Metal	10 ohm	1/2 W	±5%		ERQ12AJ100
R230	Chip	1 kohm	1/10 W	±5%		RCM102J55
R231	Chip	1 kohm	1/10 W	±5%		RCM102J55
R232	Chip	1 kohm	1/10 W	±5%		RCM102J55
R233	Chip	1 kohm	1/10 W	±5%		RCM102J55
R234	Chip	1 kohm	1/10 W	±5%		RCM102J55
R235	Chip	1 kohm	1/10 W	±5%		RCM102J55
R236	Chip	1 kohm	1/10 W	±5%		RCM102J55
R237	Chip	1 kohm	1/10 W	±5%		RCM102J55
R238	Chip	1 kohm	1/10 W	±5%		RCM102J55
R239	Chip	1 kohm	1/10W	±5%		RCM102J55
R240	Chip	1 kohm	1/10 W	±5%		RCM102J55
R241	Chip	1 kohm	1/10 W	±5%		RCM102J55
R242	Chip	1 kohm	1/10 W	±5%		RCM102J55
R243	Chip	1 kohm	1/10 W	±5%		RCM102J55
R244	Chip	1 kohm	1/10 W	±5%		RCM102J55
R245	Chip	1 kohm	1/10 W	±5%		RCM102J55
R246	Chip	560 ohm	1/10 W	±5%		RCM561J55
R247	Chip	220 ohm	1/10 W	±5%		RCM221J55
R248	Chip	33 kohm	1/10 W	±5%		RCM333J55
R249	Chip	22 kohm	1/10 W	±5%		RCM223J55
R250	Chip	100 ohm	1/10 W	±5%		RCM101J55
R251	Chip	10 kohm	1/10 W	±5%		RCM103J55
R252	Chip	10 kohm	1/10 W	±5%		RCM103J55
R253	Chip	100 ohm	1/10 W	±5%		RCM101J55
R254	Chip	6.8 kohm	1/10 W	±5%		RCM682J55
R255	Chip	4.7 kohm	1/10 W	±5%		RCM472J55
R256	Chip	100 ohm	1/10 W	±5%		RCM101J55
R257	Chip	6.8 kohm	1/10 W	±5%		RCM682J55
R258	Chip	2.2 kohm	1/10 W	±5%		RCM222J55
R259	Chip	3.3 kohm	1/10 W	±5%		RCM332J55
R260	Chip	100 ohm	1/10 W	±5%		RCM101J55
R261	Chip	470 ohm	1/10 W	±5%		RCM471J55
R262	Chip	100 ohm	1/10 W	± 5%		RCM100J55
	Transformers					
T1	Coil, RF (VHF Lo)					7SSR-278
T2	Coil, RF (VHF Lo)					7SSR-278
T3	Coil, RF (Air)					7SSR-294
T4	Coil, RF (VHF Hi)					7SSR-290
T5	Coil, RF (Air)					7SSR-289

Ref. No.	Description	RS Part No.	MFR's Part No.
T6	Coil, RF (VHF Hi)		7SSR-290
T7	Coil, IF (10.7 MHz)		GR-A470033
T8	Coil, VCO (VHF Lo)		7SSO-281
T9	Coil, VCO (Air, VHF Hi, UHF Lo)		7SSO-282
T10	Coil, DET. (455 kHz)		GR-P4203
T11	Coil, IF (455 kHz)		5SSI-292
T12	Coil, DET. (455 kHz)		5SSI-293
T13	Transformer Inverter		N19-5N75TK
T14	DC–DC Converter		7PSO-244
	Trimmers		
TC1	Trimmer 10 pF		ECR-LA010A11
TC2	Trimmer 20 pF		ECR-LA020E11
TC3	Trimmer 10 pF		ECR-LA010A11
TC4	Trimmer 10 pF		ECR-LA010A11
TC5	Trimmer 20 pF		ECR-LA020E11
TC6	Trimmer 6 pF		ECR-LA006A11
TC7	Trimmer 30 pF		ECR-LA030E11
	Crystals		
X1	10.245 MHz		TR49-10.245MHz
X2	6.400 MHz		GE-87D-7232
	Crystal Filter		
XF1	Crystal Filter		TR49-MF10R
	Miscellaneous		
CN1	Connector, Pin 3 Pin Male		PI22A03M
CN2	Connector, Pin 3 Pin Male		PI22A03M
CN3	Connector, Pin 3 Pin Male		PI22A03M
CN4	Connector, Pin 2 Pin Male		PI22A02M
CN5	Connector, Pin 2 Pin Male		PI22A02M
CN6	Connector, Pin 8 Pin Male		PI22A08M
CN7	Connector, Pin 4 Pin Male		PI22A04M
J3	Jack, Ext. SPKR		S-G8036
J4	Jack, DC		MOJ-D14
SW1	Switch, Reset		SKHHLP
40	Electroluminescent		GE-88D-7809
41	LCD		LTP8E90111
42	Holder, LCD		GE-88D-7820
43	Plate, CPU Shield		GE-89D-8022
44	Plate, VCO Shield		GE-89D-8023
45	Plate, PLL Shield		GE-89D-8024
46	Frame, VCO Shield		GE-89D-8017

Keyboard PCB Assembly

Ref. No.	Description	RS Part No.	MFR's Part No.
㉖	**PCB Assembly, Keyboard** **Consists of the following**		
	Miscellaneous		
	Connector, Housing Ass'y (3Pin Female)		PD07A12M

Headphone Jack PCB Assembly

Ref. No.	Description	RS Part No.	MFR's Part No.
㉕	**PCB Assembly, Headphone Jack** **Consists of the following:**		
	Miscellaneous		
J2	Jack, Headphone		MOJ-B24-5

MECANICAL PARTS LIST

Ref. No.		Description	RS Part No.	MFR's Part No.
T201	1	Transformer, Power		Z1739
VR201	2	Pot., Squelch 10 kohm (C)		K1611008TE-10KC-20
VR202	3	Pot., Volume W/Switch 50 kohm(A)		RK1611111-50KA-20
R271	4	Solid 1.8 Mohm 1/2 W ±5%		ERC-12GK185
J1	5	Jack, Ant		GE-85D-5383
	6	Cabinet, Top		GE-88A-7603B
	7	Ass'y, Cabinet Bottom		GA-88D-7888
	8	Chassis		GE-88A-7800
	9	Escutcheon, Front		GE-88A-7801
	10	Bracket, Ant Jack		GE-86D-6362
	11	Knob, Volume/Squelch		GE-88D-7607
	12	Speaker		S08J18
	13	Holder Speaker		GE-84D-4580
	14	Snap, Battery 1 Type, UL/CSA		L = 130 mm
	15	Box, Battery		GE-21D-5728
	16	Himelon, SPKR		GE-88D-7681
	17	Cover, Battery Box		GE-79D-0541
	18	Ant., Telescopic		GE-88D-7597
	19	Cord, AC		APC-7W-SPT1 AWG2/18
	20	Key Top		GE-88D-7927
	21	Terminal		1-SD
	22	Strainrelief,		SR-3P-4
	23	Spring, Ground		GE-89D-8083
	24	Assembly, PCB Main		
	25	Assembly, PCB Headphone		
	26	Assembly, PCB Keyboard		
	27	Screw, Bindinghead		GE-79D-0541
	28	Screw, Bindinghead		BM 4 x 8
	29	Screw, Bindinghead BLK		BM 3 x 6
	30	Screw, Panhead Tapping		PT 3 x 6
	31	Screw, Countersunkhead Machine		CM 3 x 6
	32	Screw, Bindinghead P tight		P tight 2 x 6
	33	Screw, Panhead Tapping		PT 2 x 6
	34	Screw, Panhead (Ni)		PM 3 x 8
	35	Screw, Panhead P tight		P tight 2.6 x 6
	36	Screw, Panhead With SW SEMS-A (Ni)		PMSA 2.6 x 5
	37	Screw Panhead P tight		P tight 3 x 8
	38	Nut		N 3m/m
	39	Nut Flange Serrated		FN 4m/m

SEMICONDUCTOR LEAD IDENTIFICATION AND IC DIAGRAM

Integrated Circuit Lead Identification

IC1 MC3361N

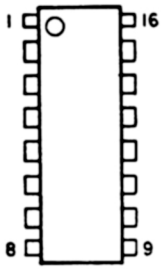

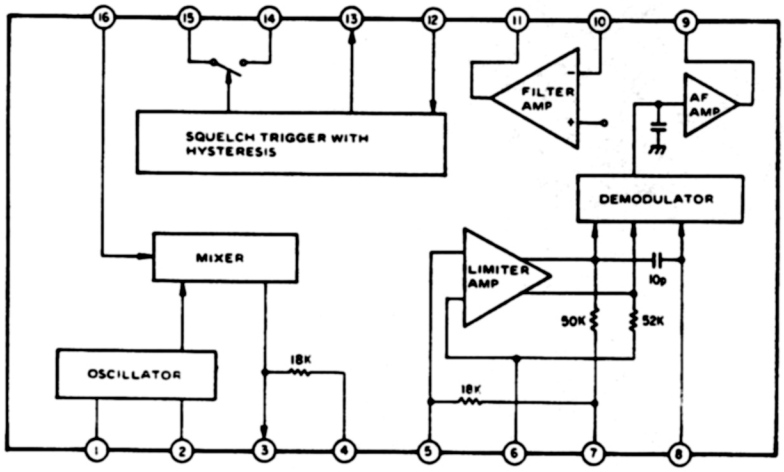

IC2 μPC324C

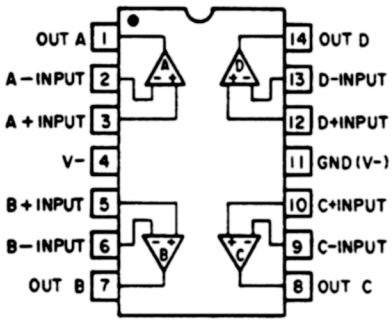

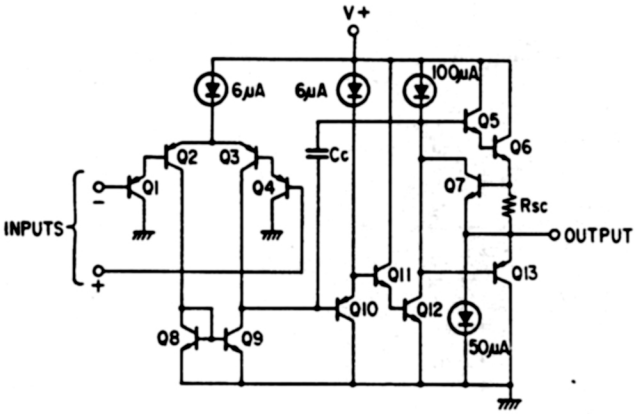

IC3 TDA1905

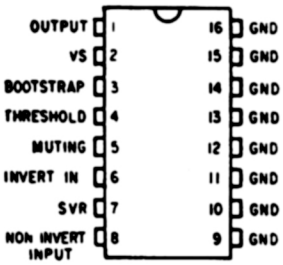

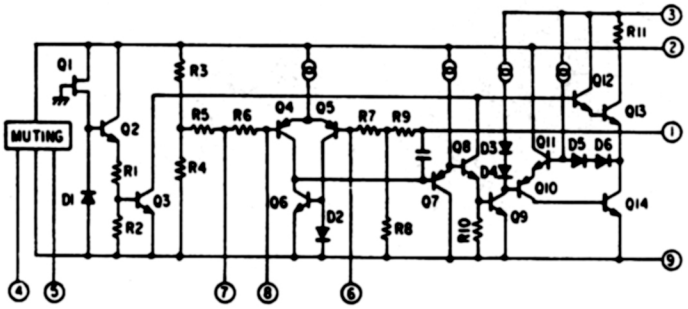

IC4 S81250HG

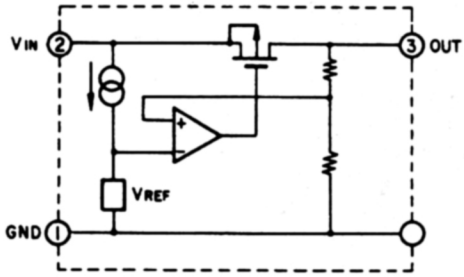

1. GND
2. INPUT
3. OUTPUT

IC5 MC7805CT

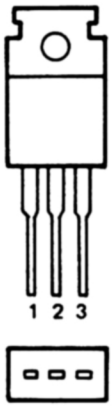

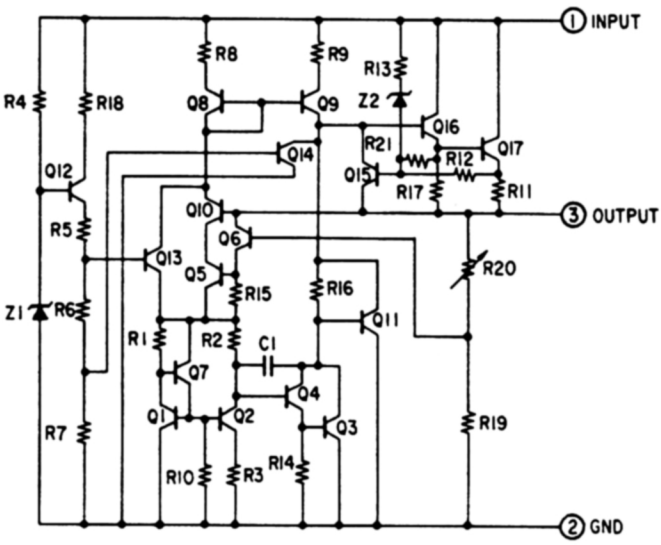

1. INPUT
2. GND
3. OUTPUT

IC6 TC5517CF-20 or LC3517BML-10

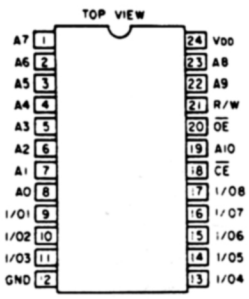

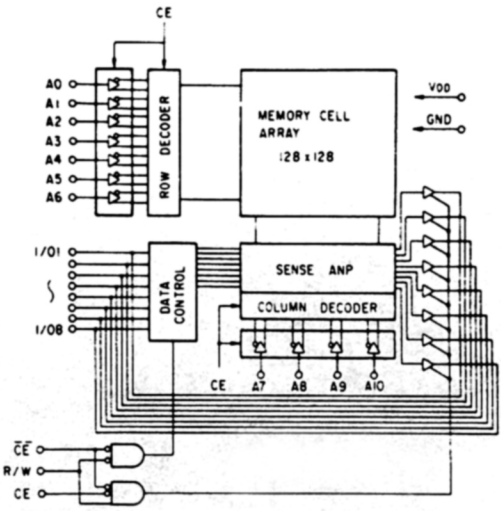

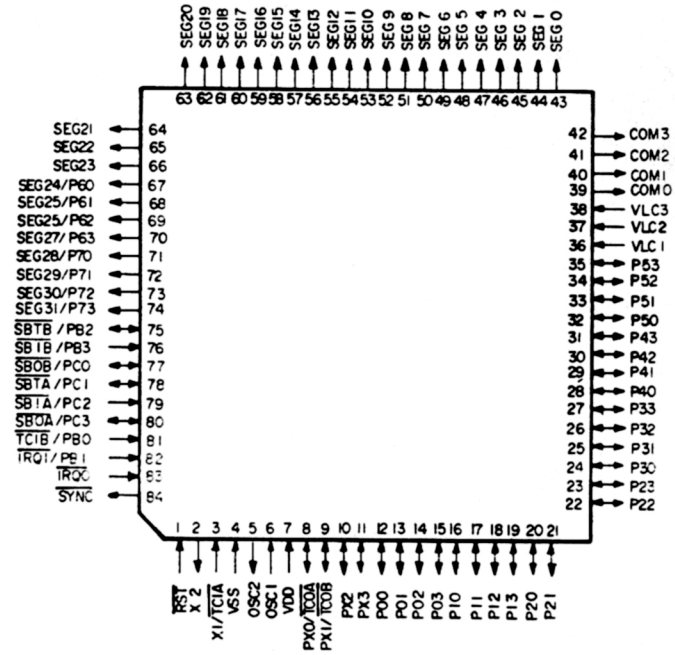
SEG20 SEG19 SEG18 SEG17 SEG16 SEG15 SEG14 SEG13 SEG12 SEG11 SEG10 SEG9 SEG8 SEG7 SEG6 SEG5 SEG4 SEG3 SEG2 SEG1 SEG0
63 62 61 60 59 58 57 56 55 54 53 52 51 50 49 48 47 46 45 44 43
SEG21 64
SEG22 65
SEG23 66
SEG24/P60 67
SEG25/P61 68
SEG25/P62 69
SEG27/P63 70
SEG28/P70 71
SEG29/P71 72
SEG30/P72 73
SEG31/P73 74
SBTB/PB2 75
SB1B/PB3 76
SB0B/PC0 77
SBTA/PC1 78
SB1A/PC2 79
SB0A/PC3 80
TC1B/PB0 81
IRQ1/PB1 82
IRQ0 83
SYNC 84
42 COM3
41 COM2
40 COM1
39 COM0
38 VLC3
37 VLC2
36 VLC1
35 P53
34 P52
33 P51
32 P50
31 P43
30 P42
29 P41
28 P40
27 P33
26 P32
25 P31
24 P30
23 P23
22 P22
1 2 3 4 5 6 7 8 9 10 11 12 13 14 15 16 17 18 19 20 21
RST
X2
X1/TC1A
VSS
OSC2
OSC1
VDD
PX0/TC0A
PX1/TC0B
PX2
PX3
P00
P01
P02
P03
P10
P11
P12
P13
P20
P21

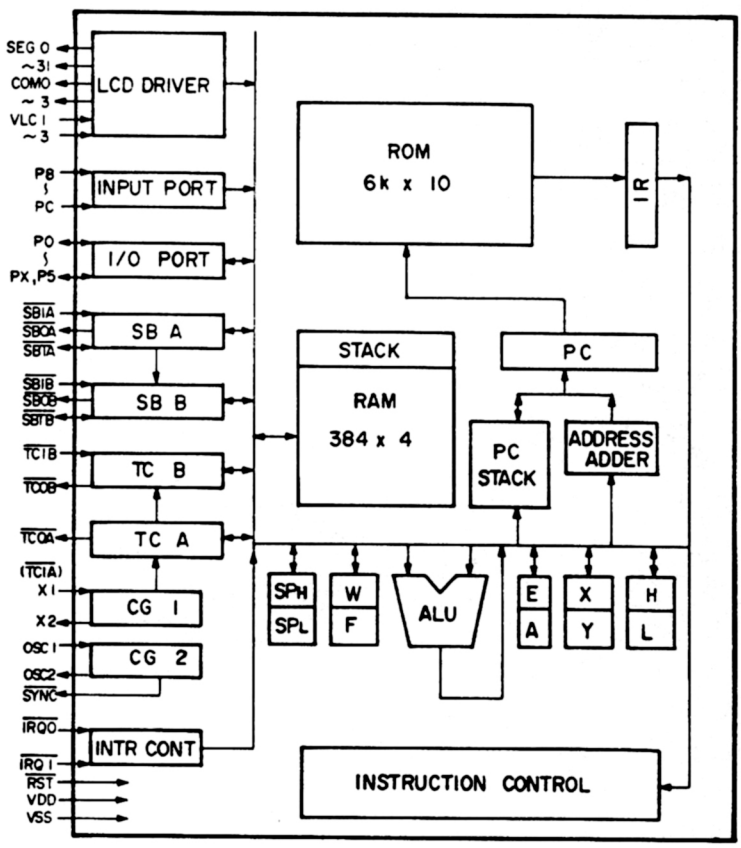
SEG 0
~31
COM0
~3
VLC1
~3
LCD DRIVER
P8
PC
INPUT PORT
P0
PX,P5
I/O PORT
SB1A
SB0A
SBTA
SB A
SB1B
SB0B
SBTB
SB B
TC1B
TC0B
TC B
TC0A
TC A
(TC1A)
X1
X2
CG 1
OSC1
OSC2
SYNC
CG 2
IRQ0
IRQ1
INTR CONT
RST
VDD
VSS
ROM
6k x 10
IR
STACK
RAM
384 x 4
PC
PC STACK
ADDRESS ADDER
SPH
SPL
W
F
ALU
E
A
X
Y
H
L
INSTRUCTION CONTROL

IC8 MB1501P-G

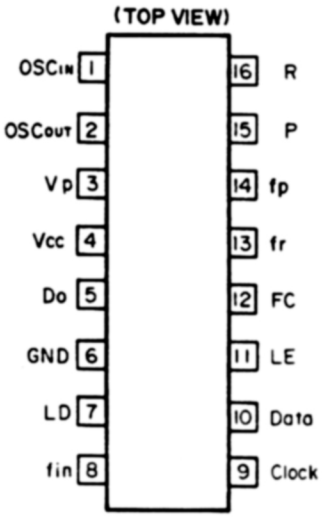

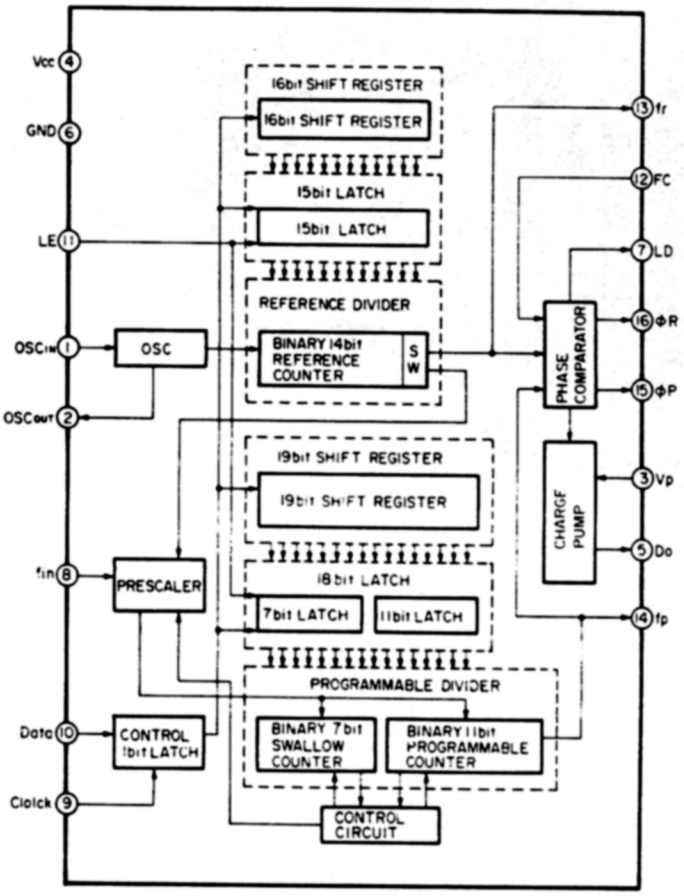

IC9 TC4S66F

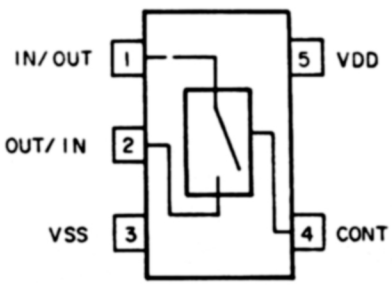

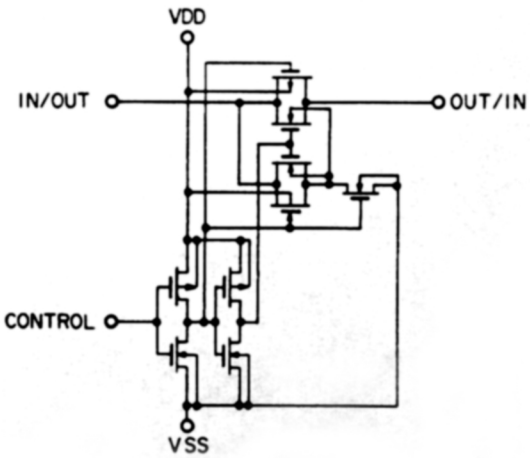

Transistor Lead Identification

2SC1623
2SC3356
2SC2712 (Y, GR)
2SC2714 (O)
2SC2732
RN2402

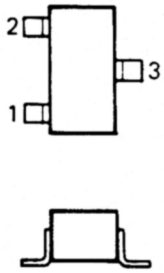

1. Emitter
2. Base
3. Collector

2SK208 (O)
2SK209 (Y)

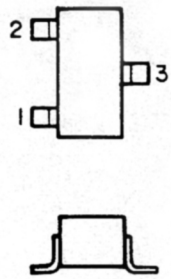

1. Drain
2. Source
3. Gate

3SK131A

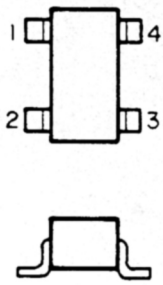

1. Gate 1
2. Gate 2
3. Drain
4. Source

Diode Identification and Lead Polarity

A) 1SS168

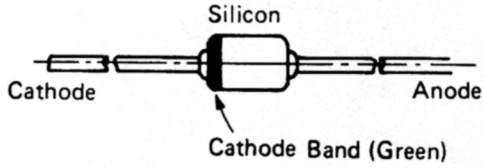

B) 1S2076A

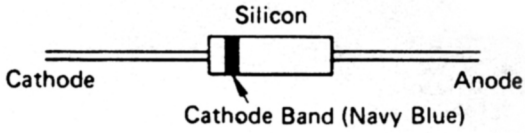

C) BB609A

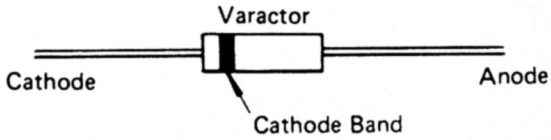

D) 1SV136A

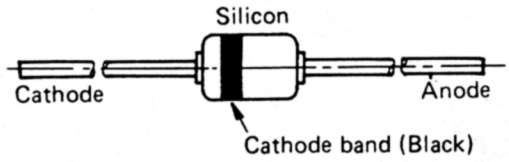

E) 1SV146

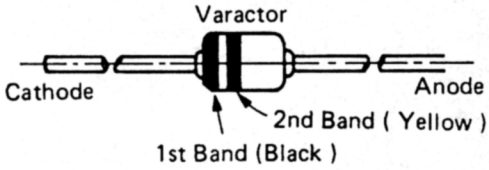

F) 1K261

G) OA90R

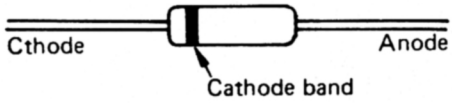

H) HSM2692

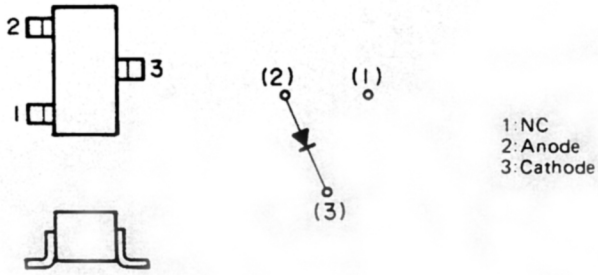

I) **S5277B**

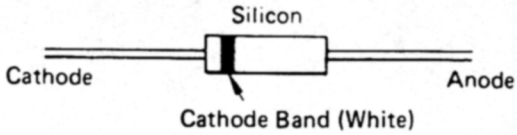

J) **HZ7B2L, HZ12C2L, HZ16-3L**

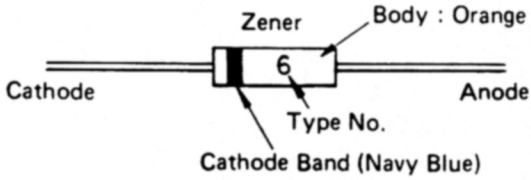

K) **HZ4BLL**

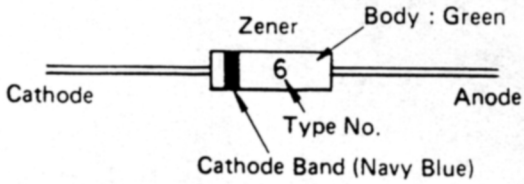

L) **HSM2693**

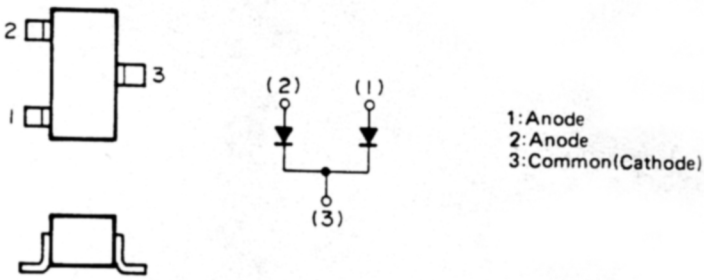

M) **RS102**

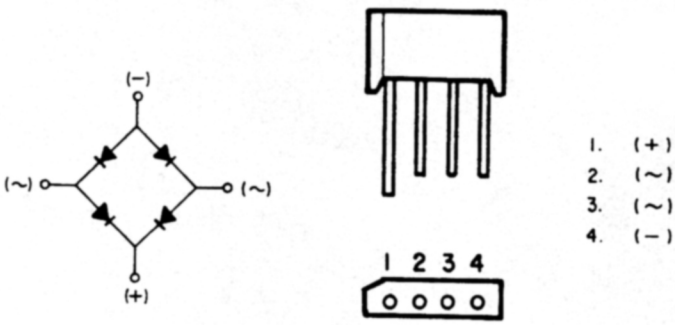

MICROPROCESSOR (IC7) PORT FORMAT

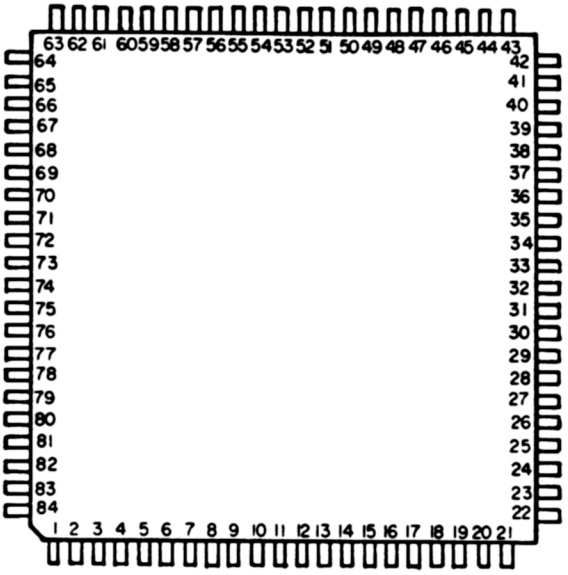

Pin No.		Pin No.	
1	Initialize signal input	43	LCD segment driver output
2	NC	44	LCD segment driver output
3	+B	45	LCD segment driver output
4	Vss	46	LCD segment driver output
5	Resonator connection terminal	47	LCD segment driver output
6	Resonator connection terminal	48	LCD segment driver output
7	Vpp	49	LCD segment driver output
8	NC	50	LCD segment driver output
9	Peep output	51	LCD segment driver output
10	BAND 6 output	52	LCD segment driver output
11	BAND 5 output	53	LCD segment driver output
12	BAND 4 output	54	LCD segment driver output
13	BAND 3 output	55	LCD segment driver output
14	BAND 2 or BAND 1 output	56	LCD segment driver output
15	Prescaler switch	57	LCD segment driver output
16	Squelch input	58	LCD segment driver output
17	Zeromatic input	59	LCD segment driver output
18	Memory R/$\overline{W}$ output	60	LCD segment driver output
19	Memory $\overline{CE}$ output	61	LCD segment driver output
20	Memory I/O 1	62	LCD segment driver output
21	Memory I/O 2	63	LCD segment driver output
22	Memory I/O 3	64	LCD segment driver output
23	Memory I/O 4	65	LCD segment driver output
24	Memory address A0	66	LCD segment driver output
25	Memory address A1	67	LCD segment driver output
26	Memory address A2	68	NC
27	Memory address A3	69	NC
28	Memory address A4	70	NC
29	Memory address A5	71	LCD bias control
30	Memory address A6	72	PLL latch output
31	Memory address A7	73	Mute output
32	Memory address A8	74	Power control
33	Memory address A9	75	Key input
34	Memory address A10	76	Key input
35	Memory $\overline{OE}$ output	77	Band switch
36	LCD drive power supply	78	Serial clock output
37	LCD drive power supply	79	Low battery input
38	LCD drive power supply	80	Serial data output
39	LCD common driver output	81	Key input
40	LCD common driver output	82	HOLD input
41	LCD common driver output	83	+B
42	LCD common driver output	84	Timing output

APPENDIX
VHF–MID Band Alignment for 20–9127

Circuit Revision

1. The following parts should be changed as shown below:

Ref. No.	Lo Band	Mid Band	Ref. No.	Lo Band	Mid Band
C3	0.001 μF	33 pF	L2	4LNC-092	4LNC-122
C7	0.001 μF	33 pF	T1	7SSR-278	7SSR-287
C43	0.001 μF	15 pF	T2	7SSR-278	7SSO-281
C44	33 pF	39 pF	C301	Not Used	56 pF
C45	33 pF	3 pF	C302	Not Used	18 pF
C46	47 pF	39 pF	D301	Not Used	BB609A
D16	BB609A	Not Used			

2. Add D42 and D45, and remove D44.

VCO Alignment

Step 1: Connect a DC SSVM to TP 4 and ground.

Step 2: Program CH1, 2 and 3 as follows:
CH1 (68 MHz), CH2 (78 MHz), CH3 (88 MHz)

Step 3: Select channel 3 and adjust TC3 for 12.0 V on the DC SSVM.

Step 4: Select channel 1 and adjust T8 for 1.5 V on the DC SSVM.

Step 5: Repeat steps 3 and 4 until no improvement is observed.
The DC SSVM should show as below.

68 MHz Voltage of TP4 1.4–1.6 V

78 MHz Voltage of TP4 6.0–7.0 V

88 MHz Voltage of TP4 11.5–12.5 V

RF Amp Alignment

Step 1: Connect instruments as shown below:

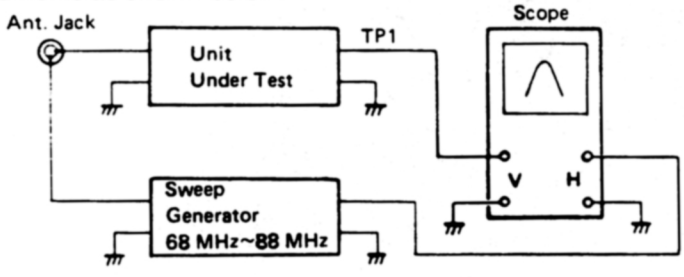

Step 2: Select channel 1 and adjust T1 and T2 for maximum RF waveform.

Step 4: Check the channels 1–3 one by one for maximum RF waveform.
Slight deviation as shown below is acceptable.

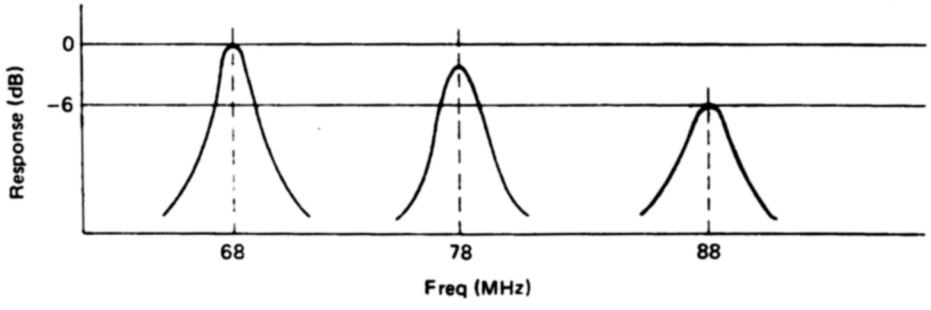

POWER TRANSFORMER SPECIFICATION

for U.S.A. and CANADA

Rated primary voltage and frequency	120 V 60 Hz
Open circuit primary current	Less then 85 mA at 120 V 60 Hz
Secondary output voltage	
(No load voltage)	DC 14.8 V
(Rated voltage)	DC 12 V ± 5% at DC 300 mA
Protector	133° C 250 V 1 A

for BELGIUM, FRANCE, U.K. and AUSTRALIA

Rated primary voltage and frequency	230 V 50 Hz
Open circuit primary current	Less then 80 mA at 230 V 50 Hz
Secondary output voltage	
(No load voltage)	AC 12.0 V
(Rated voltage)	AC 10.9 V
Protector	133° C 250 V 1 A

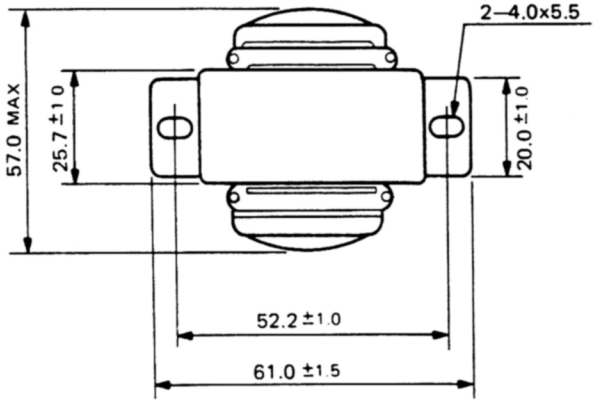

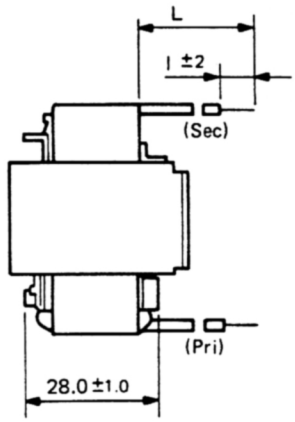

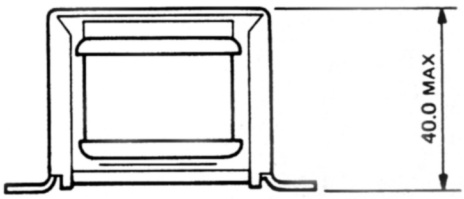

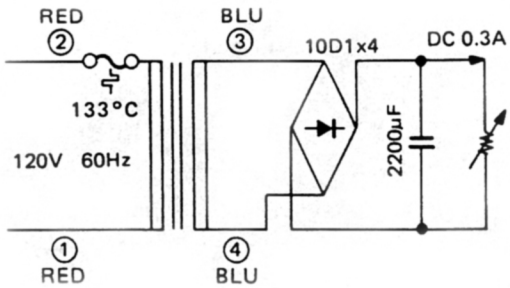

SCHEMATIC DIAGRAM

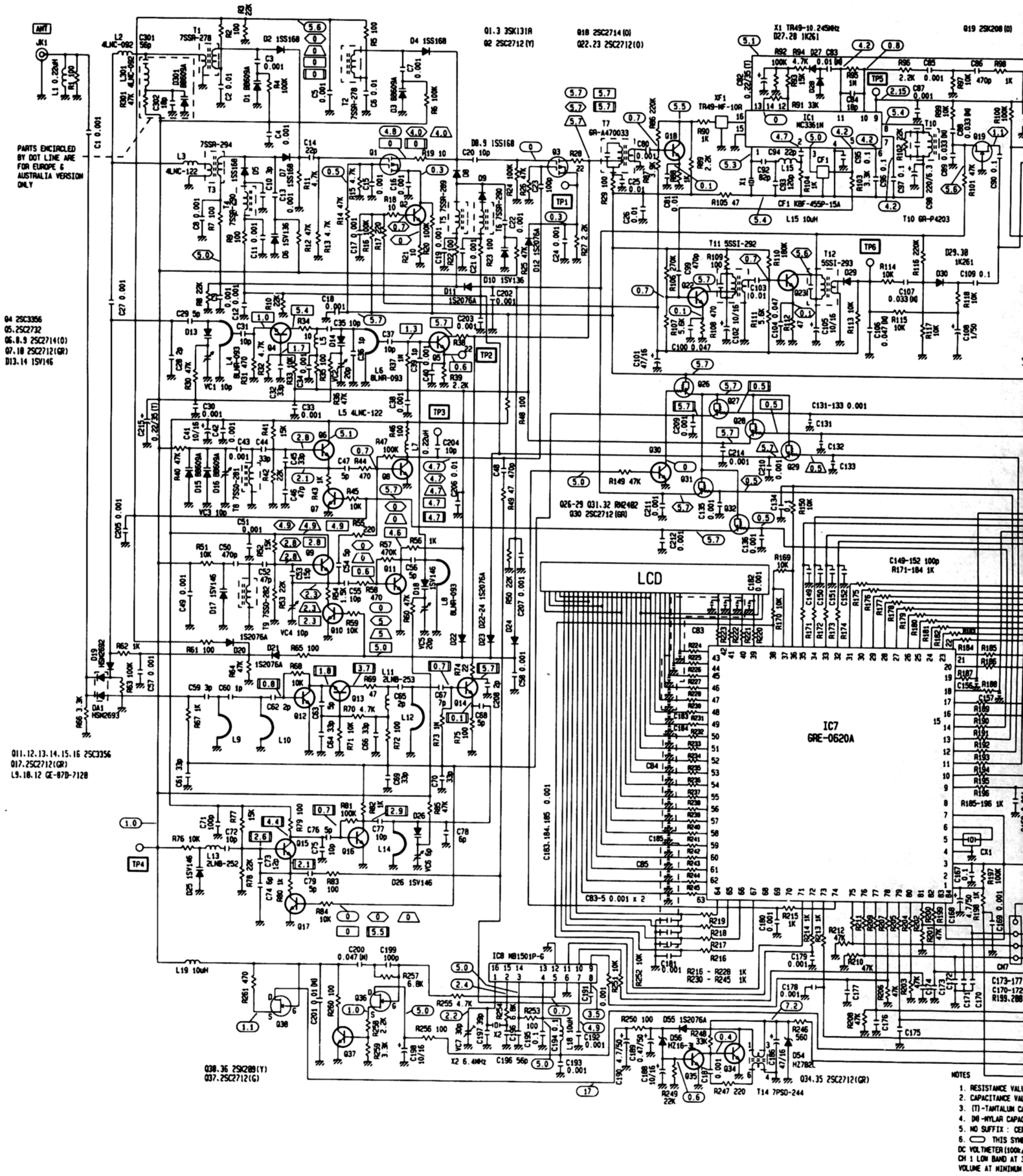

SCHEMATIC DIAGRAM

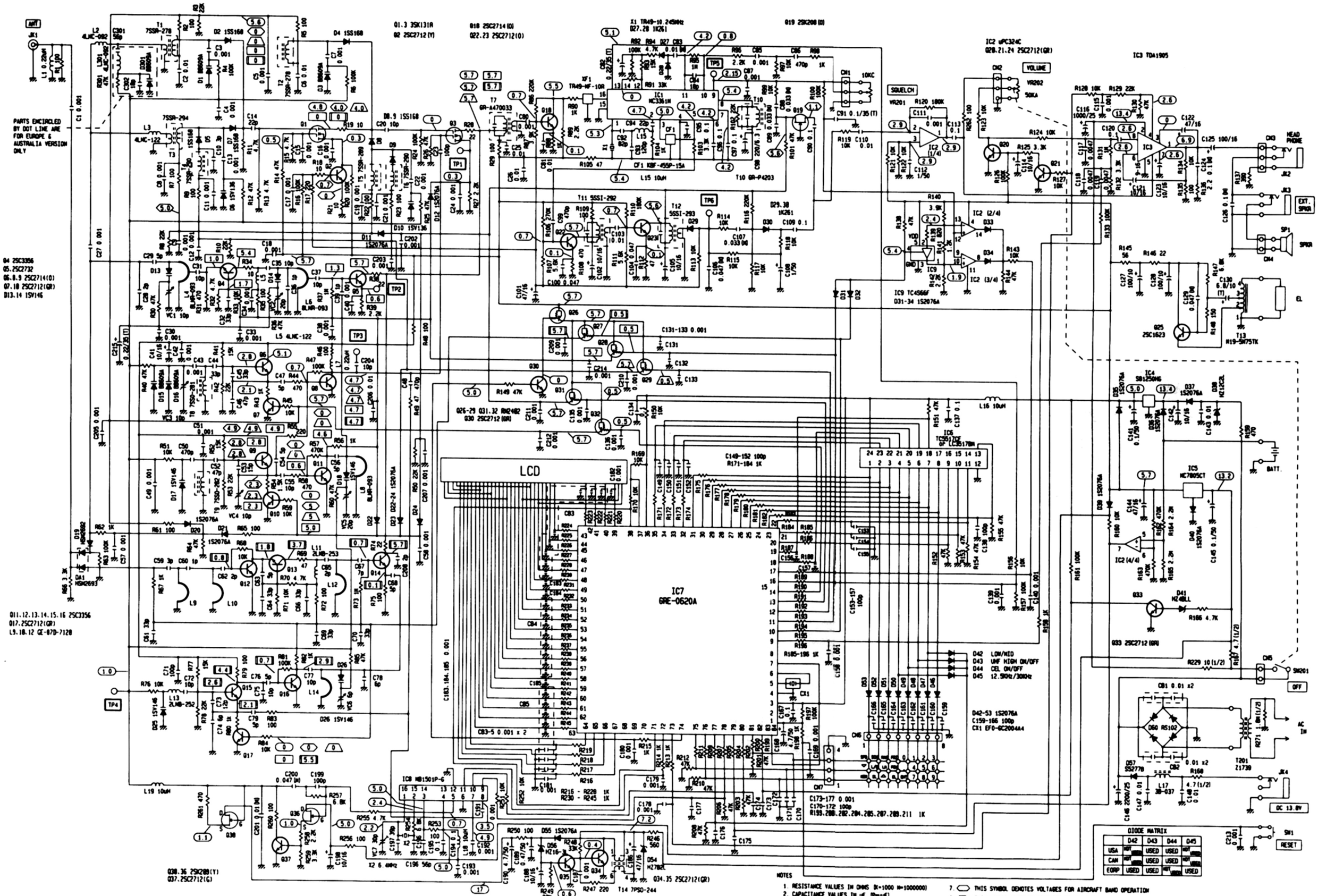

SCHEMATIC DIAGRAM

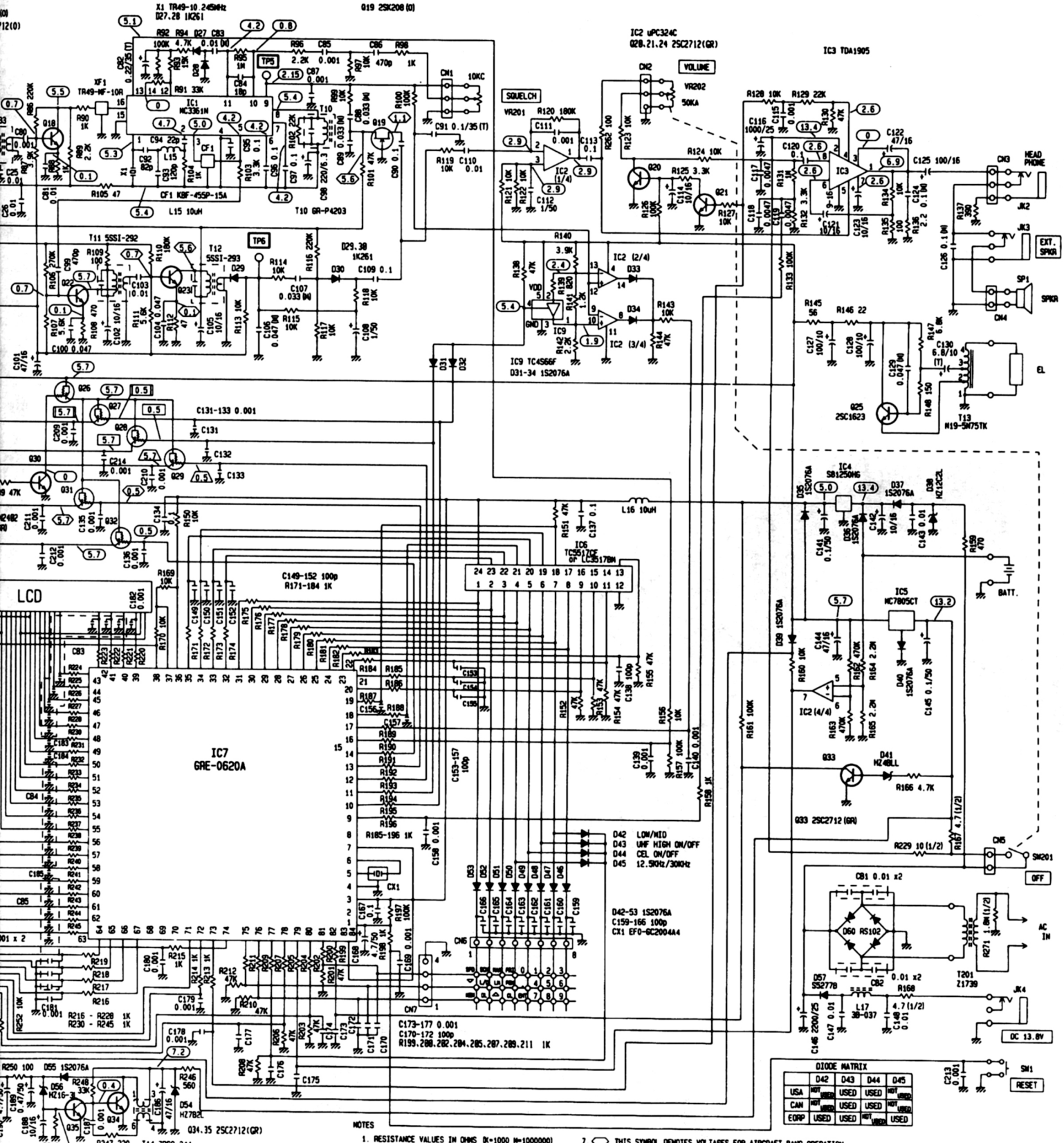

NOTES

1. RESISTANCE VALUES IN OHMS (K=1000 M=1000000)
2. CAPACITANCE VALUES IN uF (P=uuF)
3. (T)-TANTALUM CAPACITOR
4. (M)-MYLAR CAPACITOR
5. NO SUFFIX : CERAMIC or CHIP CAPACITOR
6. THIS SYMBOL DENOTES DC VOLTAGE WITH DC VOLTMETER (100k/V) UNDER FOLLOWING CONDITIONS. CH 1 LOW BAND AT 30MHz (or 60MHz) MANUAL OPERATION. VOLUME AT MINIMUM AND SQUELCH CCW
7. THIS SYMBOL DENOTES VOLTAGES FOR AIRCRAFT BAND OPERATION
8. THIS SYMBOL DENOTES VOLTAGES FOR HIGH BAND OPERATION
9. THIS SYMBOL DENOTES VOLTAGES FOR UHF LOW/T BAND OPERATION
10. THIS SYMBOL DENOTES VOLTAGES FOR UHF HIGH BAND OPERATION
11. RATING OR TYPE NUMBER OF COMPONENT PARTS ARE SUBJECT TO CHANGE
12. * USED FOR CANADA VERSION

RADIO SHACK
A Division of Tandy Corporation
Fort Worth, Texas 76102

8A9

Printed in Japan