Most - Often - Needed

1926-1938 RADIO DIAGRAMS

and Servicing Information

THEORY
PRACTICE EXPERIENCE

Factory Data Compiled by

M. N. BEITMAN

SUPREME PUBLICATIONS
CHICAGO

VOLUME 1

$2.50

Most - Often - Needed

1926-1938

RADIO DIAGRAMS

and Servicing Information

PREPARED UNDER THE DIRECTION OF

M. N. BEITMAN

B.S. in Mathematics, Illinois Institute of Technology
Radio Instructor, Chicago High Schools
Formerly, Engineer, U. S. Signal Corps
Associate, Institute of Radio Engineers
Holder of Radiotelephone First Class License
Author of Many Radio Books and Articles

SUPREME PUBLICATIONS
CHICAGO

* Copyright - 1941 - By Supreme Publications

INDEX

MODEL	PAGE
ALLIED RADIO	
SG-8	6
A9710	7
A9711	7
A9712	7
APEX	
10	213
46, 47	214
ARVIN	
(See Noblitt Sparks)	
ATWATER KENT	
Chassis F	16
30	8
32	8
35	8
37	9
38	11
40	10
42	10
43	12-13
44, 45	10
46	12-13
47	12
48	8
52	10
53	12-13
55, 55C	14
56	10
57	10
60, 60C	15
70	16
81	17
82	18
84 early	19
84 late	20
84F early	19
84F late	20
85	18
145	21
155	22
165	23
317	24
325	21
328	25
337	24
856	26
976	26
BALDWIN RADIO	
80	27
BELMONT RADIO	
525	29
BOSCH	
60, 61	204
BRANDES RADIO	
B15, B16	28
BUCKINGHAM RADIO	
80	29
CHEVROLET, DELCO	
364441	208
600565	209
601574	210
985100	211
CHRYSLER, PHILCO	
CT-11	116
CLARION	
51, 53	202
55	202
480	203
COLUMBIA RADIO	
SG-8	6
CORONA RADIO	
127	187
CROSLEY CORP.	
5B3	31
6H2	35
30-S	30
31-S	30
33-S	30
34-S	30
40-S	30
41-S	30
42-S	30
48	33
54	33
57	33
61	35
82-S	30
124	36
125	32
147	37
148	37
158	38
160	39
167	40
168	41
169	42
CROSLEY (Cont'd)	
170	43
171	44
172	32
515	45
517	46
536	34
547	46
555	47
666	48
706	49
716	51
726	50
5515	45
5536	34
5555	47
5666	48
DAY-FAN	
5091	78
DELCO	
(See United Motors)	
DETROLA RADIO	
5W, 5X	52
100A	53
106	53
134	53
EDISON	
R-6, R-7	55
EMERSON RADIO	
UV4	56
U6A	54
19	56
107	54
AD-108	57
AD-110	57
111	54
AD-125	57
AL-130	56
AL-132	56
AL-149	56
AL-168	56
EVEREADY	
50	113
52-54	113
FADA RADIO	
360	59
FAIRBANKS MORSE	
9A	58

MODEL	PAGE
GALVIN MFG. CO.	
5T1	60
5T2	60
5Y, 5-2	60
6T, 6Y, 6-2	60
50	61
60	61
GENERAL ELECTRIC	
S-22	159
S-22A	160
H-31	177
H-32	175
B-40	169
F-40	62
T-41	174
S-42	159
S-42B	171
K-43	179
K-50-P	169
H-51	177
K-51-P	169
K-52	179
K-53	179
L-53	180
E-61	64-65
E-62	64-65
K-62	163
A-63	63
F-63	67
K-63	181
A-65	63
F-65	67
F-66	67
E-68	64-65
J-70	157
H-71	177
J-75	157
J-80	161
E-81	69
A-82	68
A-83	70
A-85	70
E-86	69
A-87	68
E-101	71
E-105, E-106	71
E-126	66
S-132	162
GENERAL HOUSEHOLD	
5B	73
7B	76
8A	74
11G	75
12B, 12W	72
501	73
520, 530	73
550	73
750-753	76

MODEL	PAGE
GEN HOUSEHOLD (Cont'd)	
801	74
1191, 1191B	75
1291	72
1297	72
GENERAL MOTORS	
120	77
130	77
140	77
A5003	78
A5004	78
A5010	78
5091	78
GRAYBAR ELECTRIC	
GT-7	157
GB-8	159
GB-8-A	160
GT-8	161
GB-9	163
GC-13	157
GC-14	161
GB-100	175
GB-300	165
GB-310	167
GB-330	176
500, 550	172
GB-678	174
GB-700	177
GB-770	177
GB-900	177
GB-989	162
GRISBY-GRUNOW	
(See Majestic)	
GRUNOW	
(See General Household)	
HALLICRAFTERS	
Sky Buddy	101
5T	101
INTERNATIONAL	
40, 41	103
43,44	103
66X	103
86	103
96	103
1019	102
KADETTE	
(See International)	
KOLSTER RADIO	
K20, K22	104
K27	104
MAJESTIC (Old)	
7BP3	79
7P3	79
7BP6	79
7P6	79
8P3	79
8P6	79
9P3	79
9P6	79
15, 15B	80

MODEL	PAGE
MAJESTIC (Cont'd)	
20	81
55 to 58	82
59	82
60 to 62	83
66	84
70	85-86
70B	85-86
71, 72	85-86
90	87
90B	88
91, 92	87
93	88
116	89
130 to 132	90
130A	90
131, 132	90
160, 163	91
200 to 204	92
220, 223	93
230A, 233	94
290-294	95
330, 336	96
360, 363	97
400, 413	98
400A, 413A	99
460, 463	100
MID-WEST RADIO	
16-34	105
MONTGOMERY WARD	
62-49	106
62-68	106
62-70	106
62-72	106
62-97	107
62-99	107
62-123	110
62-131	110
62-133	110
62-142	110
62-144	110
62-152	110
62-158	110
62-185	108
62-187	108
62-190	108
62-196	108
62-233	109
62-265	111
62-425	111
MOTOROLA	
(See Galvin)	

MODEL	PAGE
NATIONAL CARBON	
50	113
52 to 54	113
NOBLITT SPARKS	
RE-29	112
RE-35	112
58, 58-A	112
88	112
OLDSMOBILE	
982006	212
PACIFIC RADIO	
40MB1	7
PHILCO RADIO	
5	115
T11, CT-11	116
16	117
20, 20A	118
21	118
45	119
50	120
50A	120
53	121-122
54	121-122
57	123
60	124
66	114
70, 70A	125-126
70 AVC	127
70A AVC	127
71	128-129
80	130-131
82	133
84	132
86	133
87	134-135
89 (123)	136
90, 90A	137-140
96, 96A	141-142
118	143
610	143
620 (late)	144
623	145
650	146
37-10	147
37-11	147
37-33	148
37-38	149
37-84	149
37-93	150
37-602	151
37-623	152
37-640	153
37-650	154
38-116	155

MODEL	PAGE
RCA MFG. CO.	
4X	156
4X3, 4X4	156
R-4	157
5T6	158
5T7, 5T8	158
R-6	157
R-7	159
R-7-A	160
R-8	161
R-9	159
R-10	162
R-11	163
R-12	161
13K	164
Radiola 16	165
Radiola 17	166
R-17-M	171
Radiola 18	167
R-28-P	169
R-32	168
M-34	169
R-35	170
R-39	170
R-43	171
44	172
RE-45	168
46	172
Radiola 47	173
Radiola 48	174
R-50	175
R-52	168
R-55	175
RE-57	170
Radiola 60	176
RE-75	168
Radiola 80	177
Radiola 82, 86	177
94BK2	175
94BT2	175
96K2	178
96T3	178
97E	178
97KG	178
97T	178
R-100	179
R-101	179
110	179
111	179
U-111	180
114	180
115	179
120	181
810K, 810T	182
811K	183
SEARS, ROEBUCK	
1320	184
1322	184
1324	184
1326X	184

MODEL	PAGE
SEARS, ROEBUCK (Cont'd)	
1386	184
1450	184
1454, 1456	184
1531	184
1907	187
1923	185
1933	185
1939	187
1957	187
1983	185
1993	185
4414, 4415	186
4500	186
4505, 4506	186
4509-4511	186
7004	184
SPARTON	
518, 518X	191
558	191
568	191
578, 578X	191
589	192
591	189
593	189
600	192
610	192
620	192
737 AC	192
930	188
931 AC	189
1068	190
1078	190
STEWART-WARNER	
R-100-A, B, E	193
R-102	195
112	194
R-134	197
R-136	196
R-160	198
950 AC	199
1121	194
1341-1349	197
1361-1369	196
1601-1609	198
STROMBERG-CARLSON	
635	200
SUPREME INSTRUMENTS	
504	201
TRANSF. C. OF A.	
51	202
53	202
55	202
480	203
UNITED AMERICAN BOSCH	
60, 61	204

MODEL	PAGE
UNITED MOTORS	
R-640	205
4037	207
364441	208
600565	209
601574	210
980441	207
982006	212
985100	211
U.S. RADIO & TELEVISION	
10	213
46, 46A	214
47, 47A	214
WARDS	
(See Montgomery)	
WELLS GARDNER	
7D	110
WESTINGHOUSE EL.	
WR-4	174
WR-5, 6, 7	177
WR-10	159
WR-10-A	160
WR-12	159
WR-15	163
WR-15-A	162
WR-17	157
WR-18	161
WR-27	169
WR-32	179
WR-33	169
WR-35	179
WR-36	181
ZENITH RADIO	
4-F-227	215
5-F-134	216
5-F-166	216
5-J-217	217
5-J-247	217
5-J-255	217
5-R-303	218
5-R-312	218
5-R-316	218
5-R-317	218
5-R-337	218
5-S-29	219
5-S-56	219
5-S-119	206
5-S-126	206
5-S-127	206
5-S-150	206
5-S-151	206
5-S-161	206
5-S-201	220
5-S-218	220
5-S-220	220
5-S-228	220
5-S-237	220
ZENITH RADIO (Cont'd)	
5-S-250	220
5-S-252	220
5-X-230	221
5-X-248	221
5-X-274	221
6-S-27	222
6-S-52	222
6-S-128	223
6-S-137	223
6-S-147	223
6-S-152	223
6-S-157	223
6-S-203	224
6-S-222	224
6-S-223	224
6-S-229	224
6-S-239	224
6-S-241	224
6-S-254	225
6-S-256	225
6-V-27	226
6-V-62	226
7-D-119	227
7-D-126	227
7-D-127	227
7-D-138	227
7-D-148	227
7-D-151	227
7-D-162	227
7-D-168	227
7-J-232	229
7-J-259	229
7-S-28	230
7-S-53	230
7-S-204	228
7-S-240	228
7-S-242	228
7-S-258	228
7-S-260	228
7-S-261	228
7-S-323	231
7-S-342	231
7-S-343	231
7-S-363	231
7-S-364	231
7-S-366	231
8-S-129	232
8-S-154	232
9-S-203	233
9-S-232	233
9-S-242	233
9-S-244	233
9-S-262	233
9-S-263	233
9-S-264	233
10-S-130	234
10-S-147	234
10-S-153	234
10-S-155	234
10-S-156	234
10-S-157	234
10-S-160	234
ZENITH RADIO (Cont'd)	
12-A-57	235
12-A-58	235
12-L-57	235
12-L-58	235
12-S-205	236
12-S-232	236
12-S-245	236
12-S-265	236
12-S-266	236
12-S-267	236
12-S-268	236
12-U-158	237
12-U-159	237
50, 52	238
54	238
60 to 62	238
64	238
67	238
474	239
585	239
602	238
612	238
622	238
642	238
672	238
705-07	240
711, 712	240
715	239
750	240
755, 756	239
785	239
1004	234
1202	235
1203	237
1204	236
2052A, B, C	240
2053	239
5408	215
5513	219
5516	206
5518	216
5521	220
5523	221
5524	217
5528	218
5619	222
5621	226
5634	223
5638	224
5644	225
5704	230
5707	227
5709	228
5711	229
5714	231
5801	232
5905	233

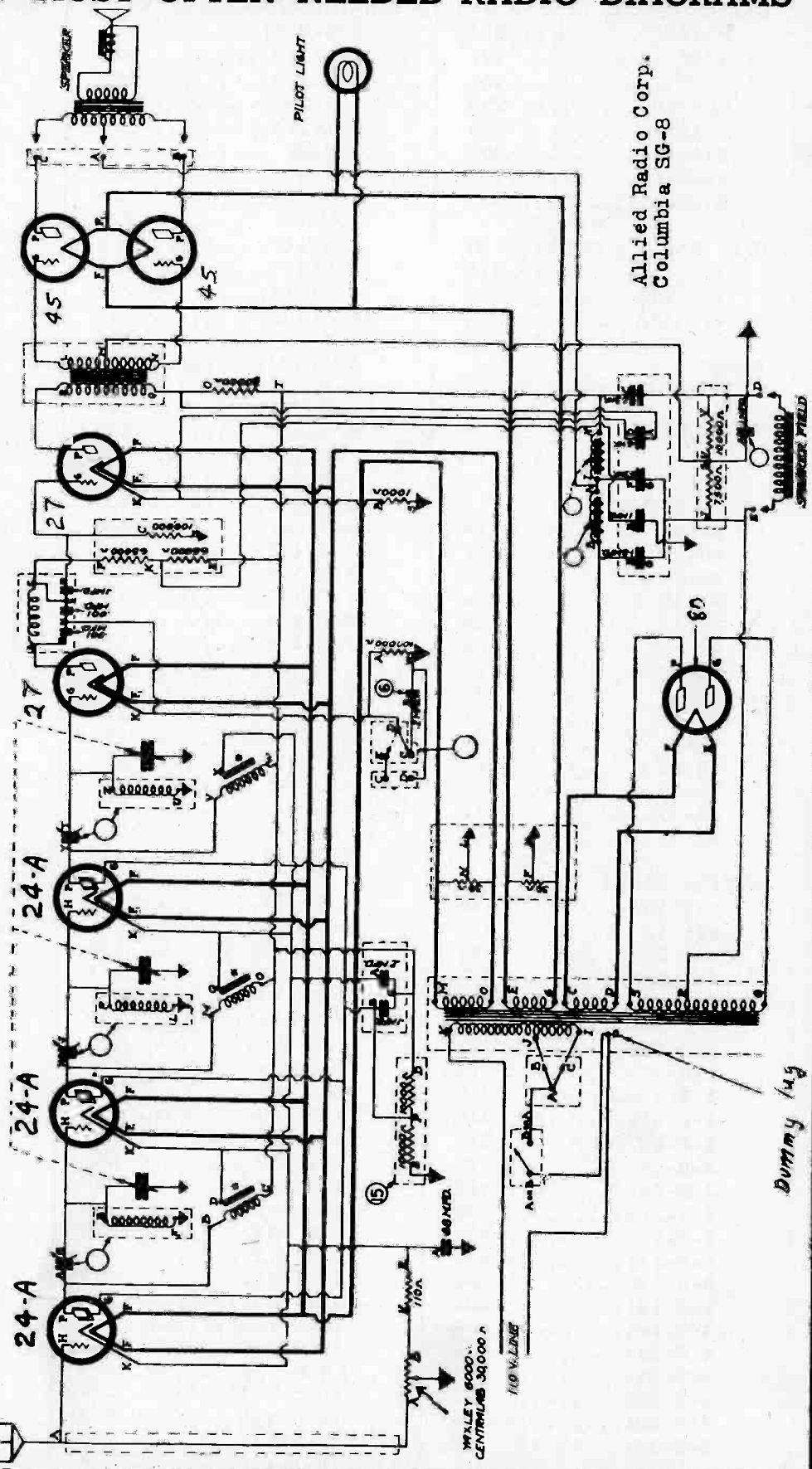

Tube	Position	Plate Volts	Screen Volts	Grid Volts	Plate Current
24-A	1st R.F.	180	80	-1.5	4.5 ma.
24-A	2nd R.F.	180	80	-1.5	4.5 ma.
24-A	3rd R.F.	180	80	-1.5	4.5 ma.
27	Detector	106		-14.5	0.2 ma.
27	1st A.F.	162		-3	3.2 ma.
45	Final PP	230			20. ma
45	Output				

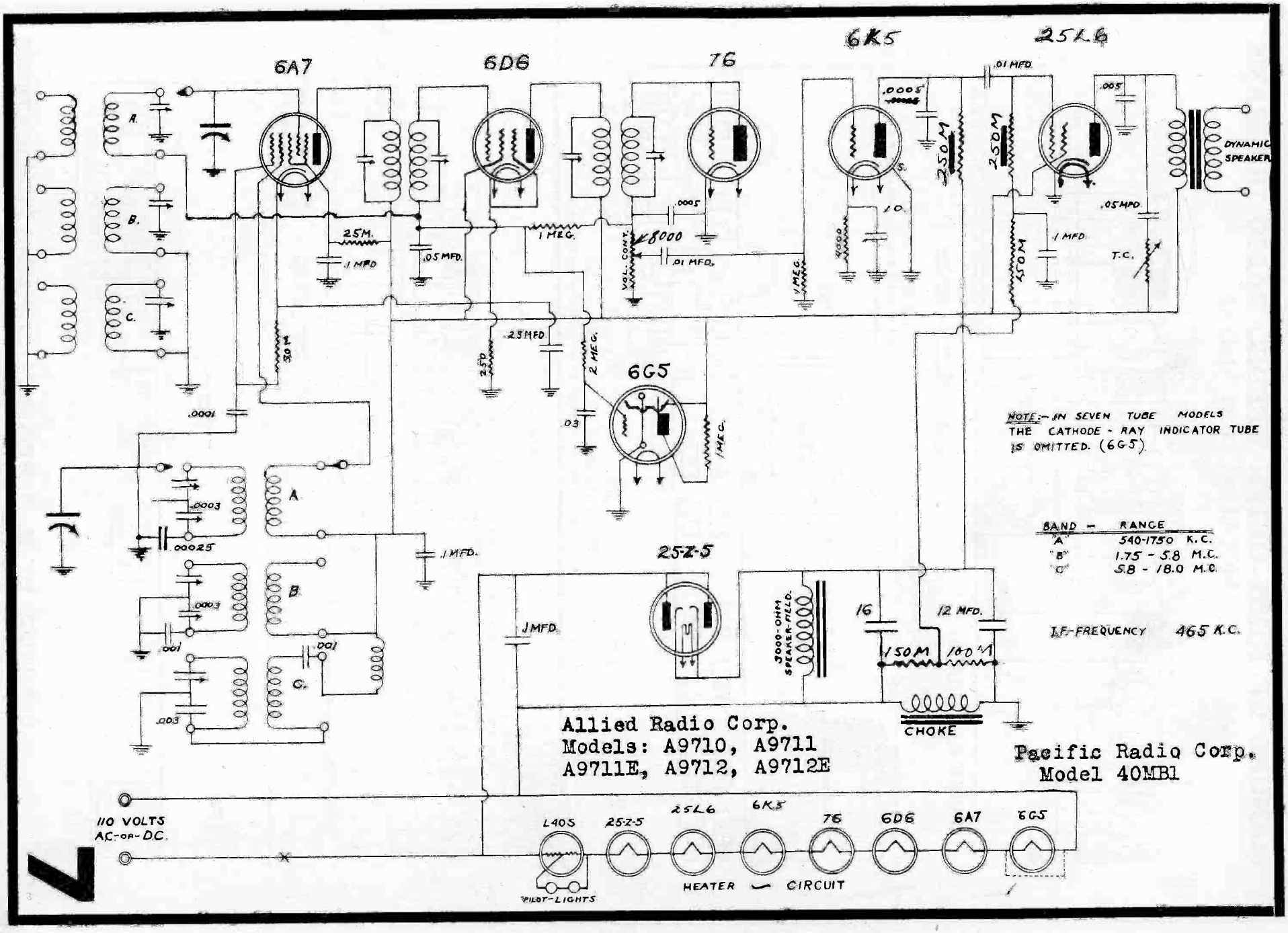
6A7
6D6
76
6K5
25L6
6G5
25Z5
DYNAMIC SPEAKER
VOL. CONT.
8000
1 MEG.
25M.
.05 MFD.
.1 MFD
.01 MFD.
.0005
250M
T.C.
2 MEG.
.25 MFD.
.03
.0001
.0003
.00025
.001
.003
A
B
C
R.
B.
C.
3000-OHM SPEAKER-FIELD.
16
12 MFD.
150M
100M
CHOKE
NOTE:- IN SEVEN TUBE MODELS THE CATHODE - RAY INDICATOR TUBE IS OMITTED. (6G5)
BAND - RANGE
"A" 540-1750 K.C.
"B" 1.75 - 5.8 M.C.
"C" 5.8 - 18.0 M.C.
I.F.-FREQUENCY 465 K.C.
Allied Radio Corp.
Models: A9710, A9711
A9711E, A9712, A9712E
Pacific Radio Corp.
Model 40MB1
110 VOLTS AC-OR-DC.
L40S
PILOT-LIGHTS
HEATER — CIRCUIT
7

MANUAL OF MOST-OFTEN-NEEDED RADIO DIAGRAMS

MODEL 30, 32, 35 AND 48

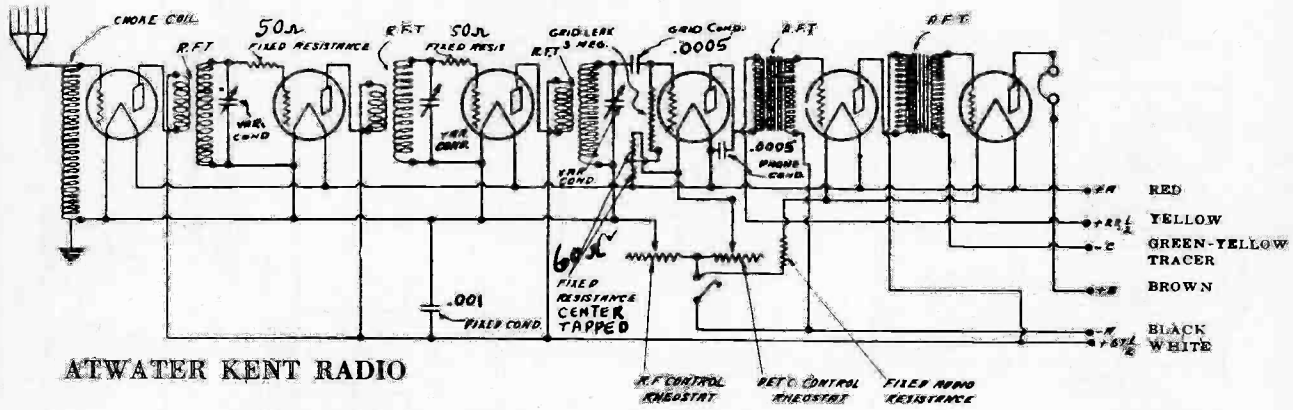

ATWATER KENT RADIO

WIRING DIAGRAM OF MODEL 30, 35 AND 48.

In Model 35, one rheostat controls the three R. F filaments and a fixed resistor is connected in series with the detector and two A. F. filaments.

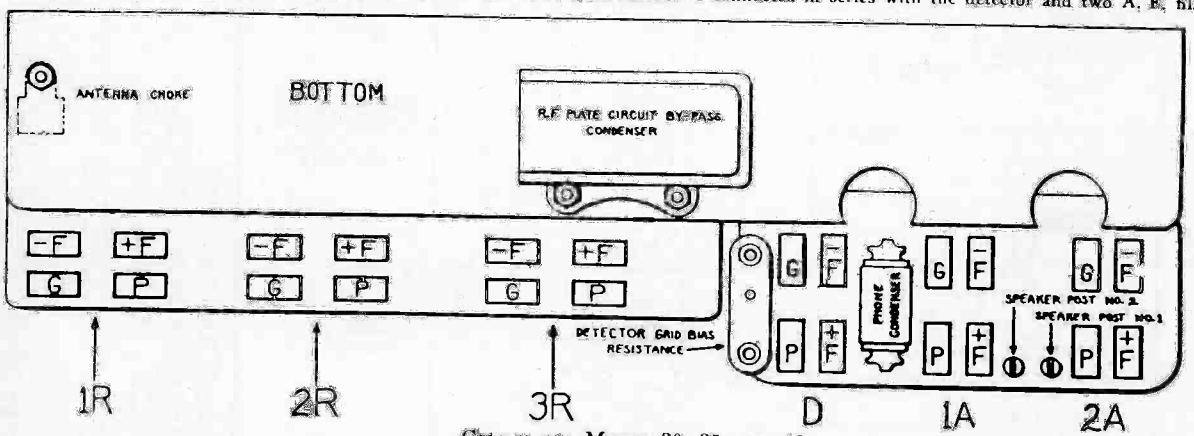

CHART FOR MODEL 30, 35 AND 48.

Early Model 30 Sets have separate R. F. sockets, but the socket contacts are in same relative position as shown in above chart.

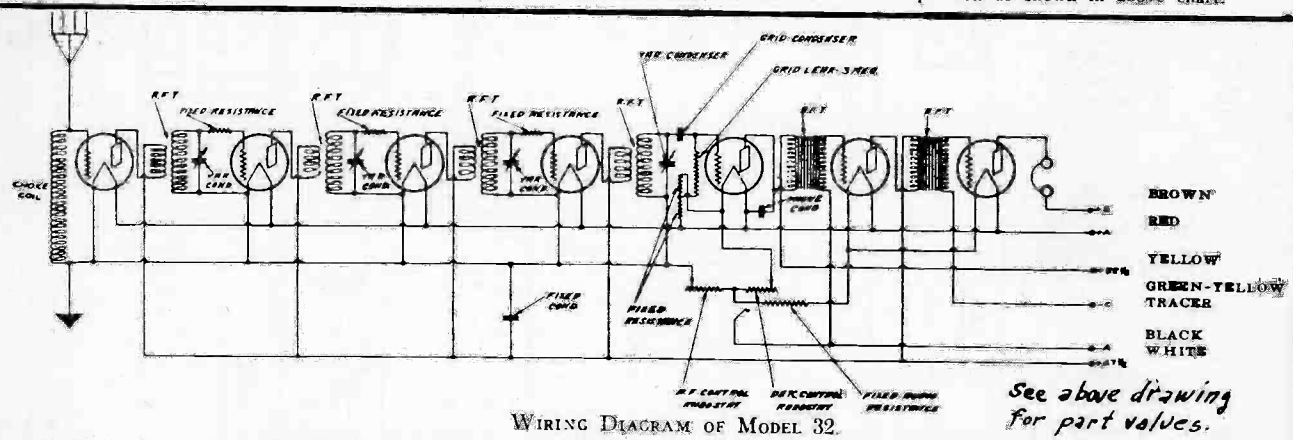

See above drawing for part values.

WIRING DIAGRAM OF MODEL 32.

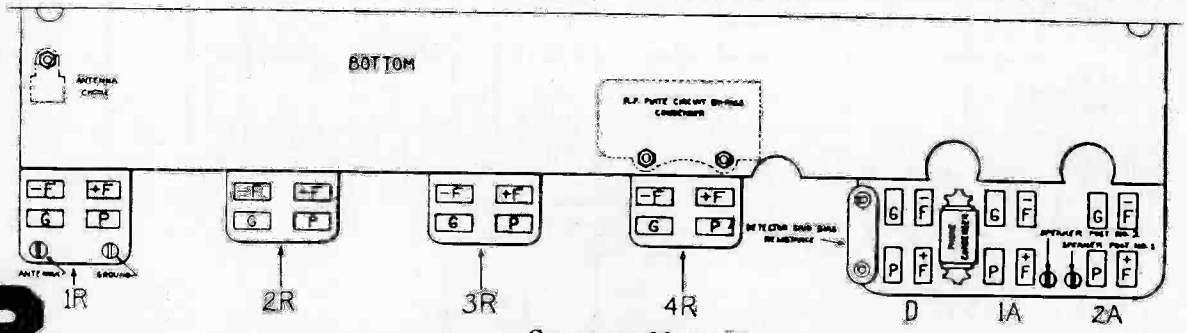

CHART FOR MODEL 32.

COMPILED BY M. N. BEITMAN, SUPREME PUBLICATIONS

MANUAL OF MOST-OFTEN-NEEDED RADIO DIAGRAMS

ATWATER KENT RADIO

MODEL 37, 37-F, 37-C CHASSIS

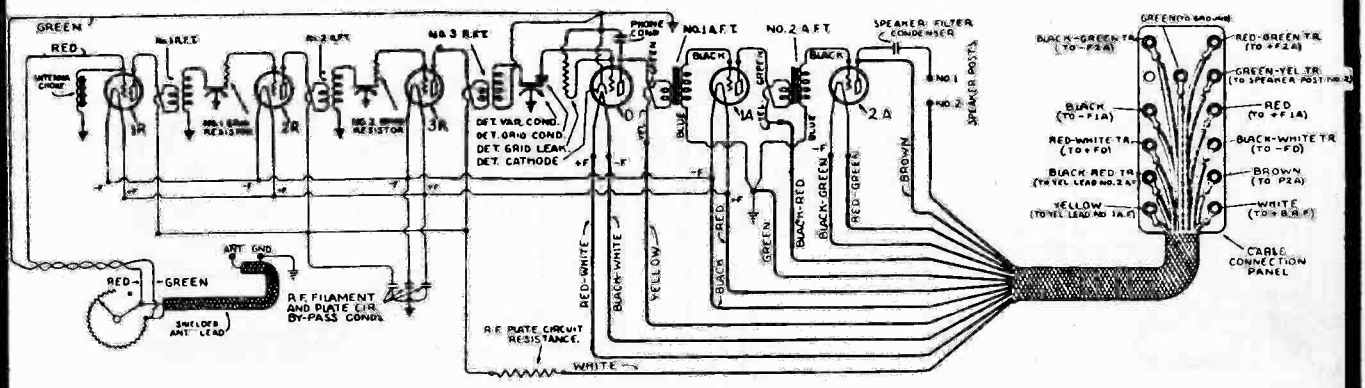

WIRING DIAGRAM OF MODEL 37, 37-F, 37-C.

A 2nd-A. F. filament-shunt resistor is used before Serial No. 1,385,000, in which case speaker post No. 2 connects to the centre-tap of this resistor, and the green-yellow tracer lead is not used. The R. F. plate circuit resistor is used after Serial No. 1,385,000.

In Model 37-C the on-off switch is connected to the two terminals on either side of the ground eyelet. A 2nd-A. F. filament-shunt resistor is used in the chassis of all Model 37-C receivers.

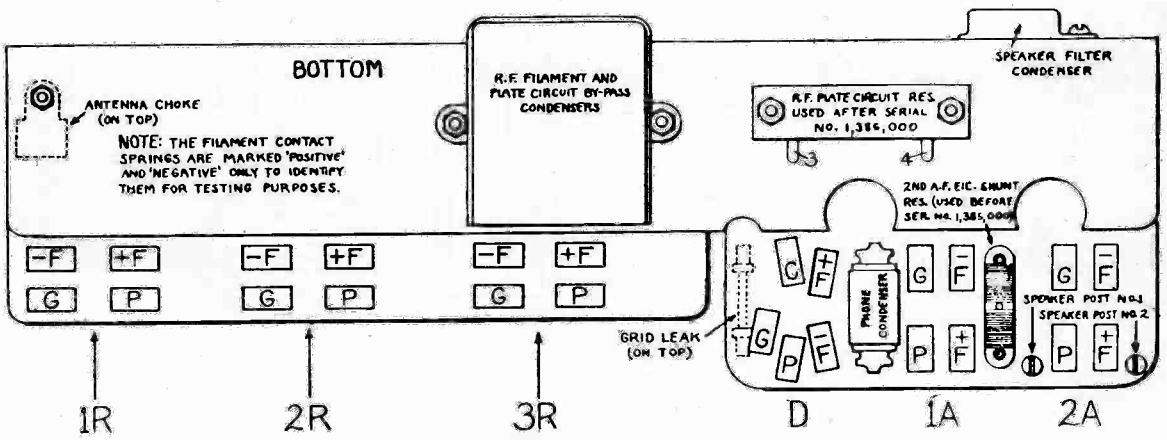

CHART FOR MODEL 37, 37-F, 37-C.

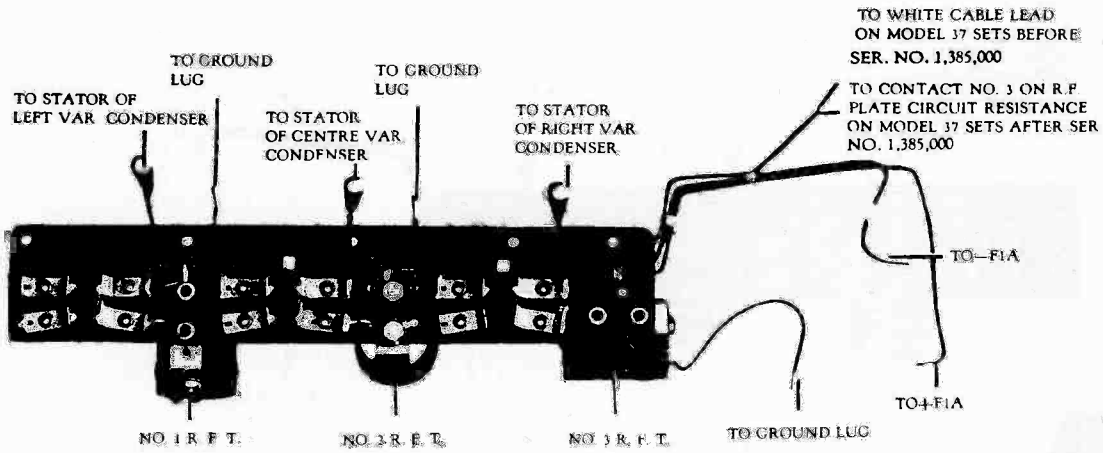

VIEW OF R. F. AMPLIFIER.

ATWATER KENT RADIO

MODEL 40, 40-F, 42, 42-F, 44, 44-F, 45, 52, 56 AND 57 CHASSIS

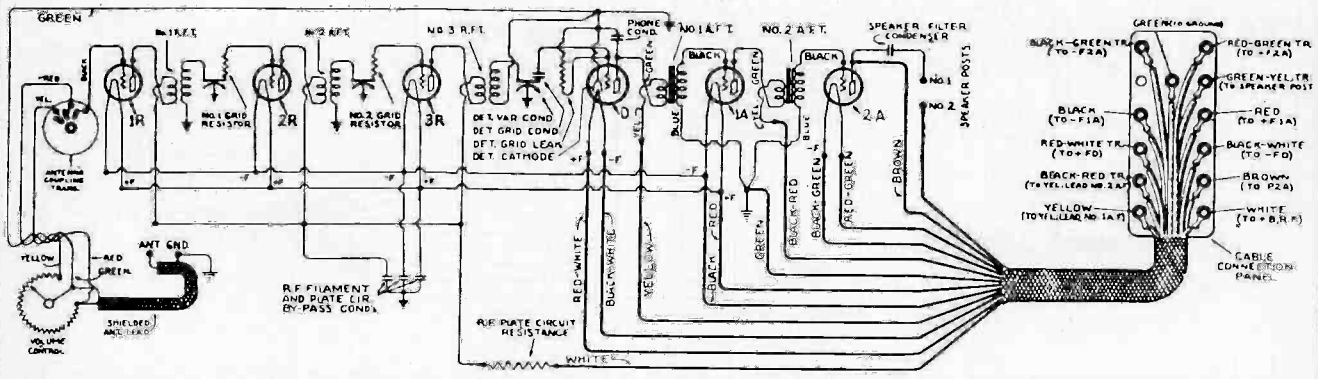

WIRING DIAGRAM OF MODEL 40, 40-F, 42, 42-F, 52, 56 AND 57.

Model 52 does not have the shielded antenna lead, but is provided with two twenty-foot leads which are connected to the volume control, black antenna and black-green tracer for ground. Model 56 and 57 have antenna and ground posts at the bottom of the cabinet.

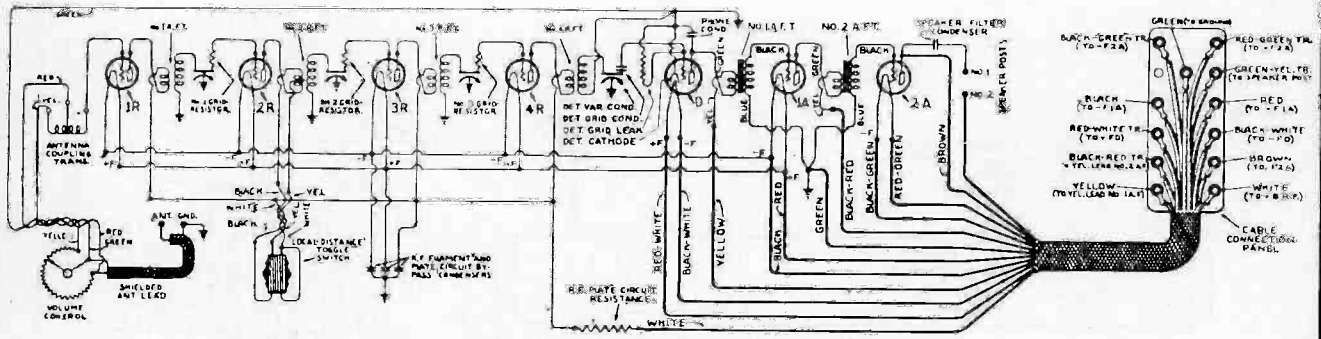

WIRING DIAGRAM OF MODEL 44, 44-F AND 45.

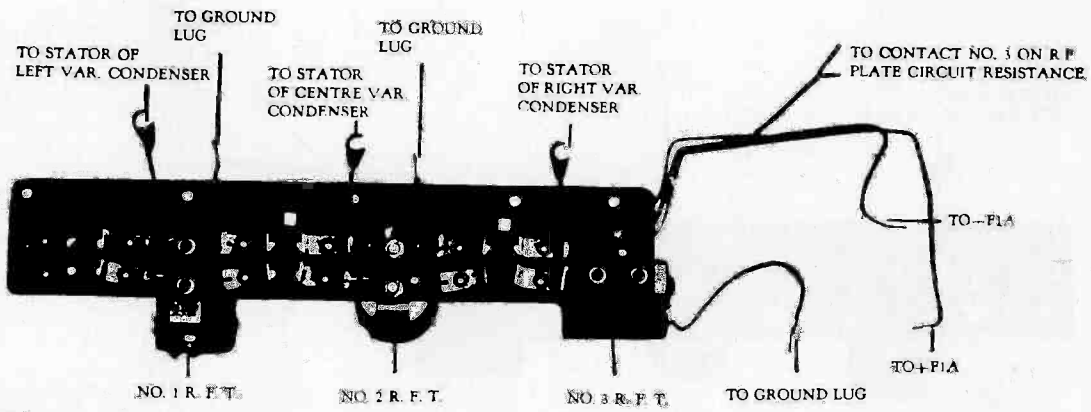

VIEW OF R. F. AMPLIFIER ASSEMBLY IN MODEL 40, 40-F, 42, 42-F, 52, 56 AND 57.

ATWATER KENT RADIO

MODEL 38 CHASSIS

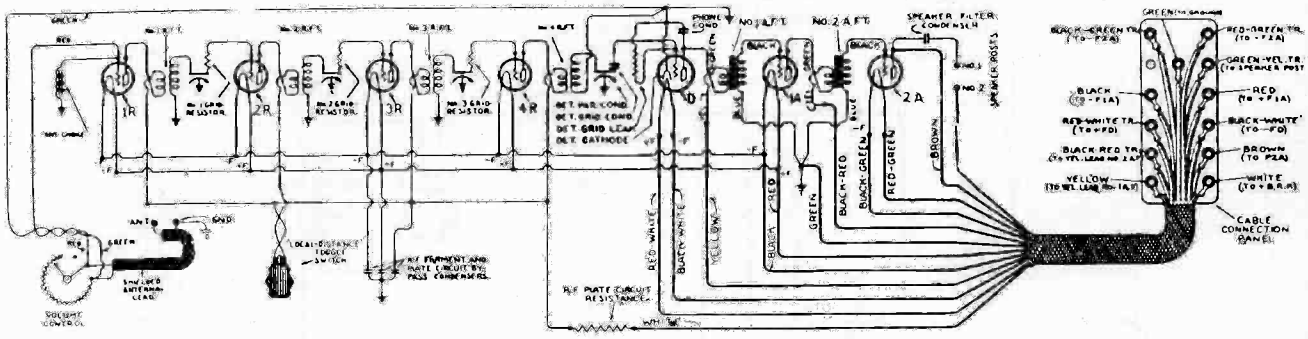

WIRING DIAGRAM OF MODEL 38.

A 2nd-A. F. filament-shunt resistor is used before Serial No. 1,752,000 and the green-yellow tracer cable lead is not used.

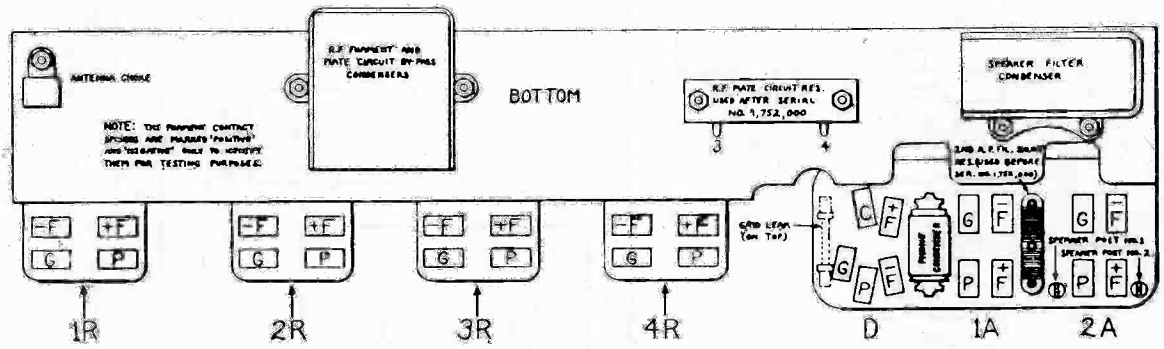

CHART FOR MODEL 38.

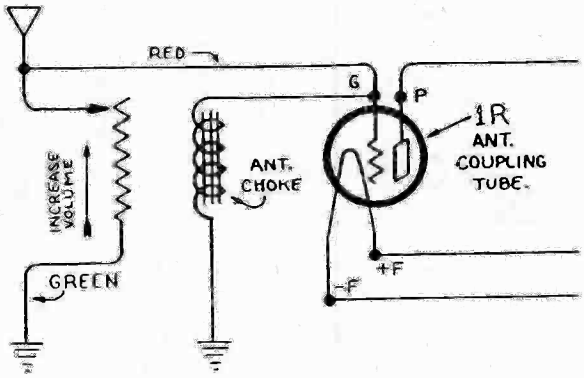

SCHEMATIC DIAGRAM OF VOLUME CONTROL IN MODEL 37, 37-F, 37-C AND 38.

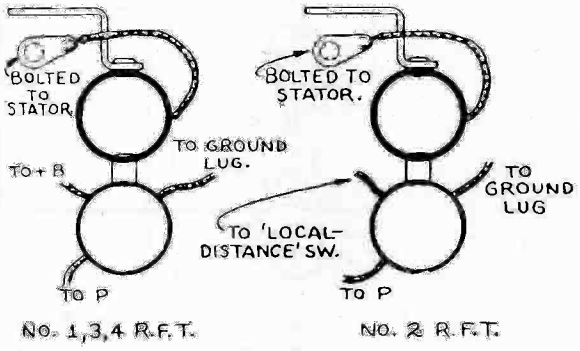

SKETCH SHOWING CONNECTIONS FROM R. F. TRANSFORMERS, MODEL 38.

ATWATER KENT RADIO

MODEL 43, 46, 47 AND 53

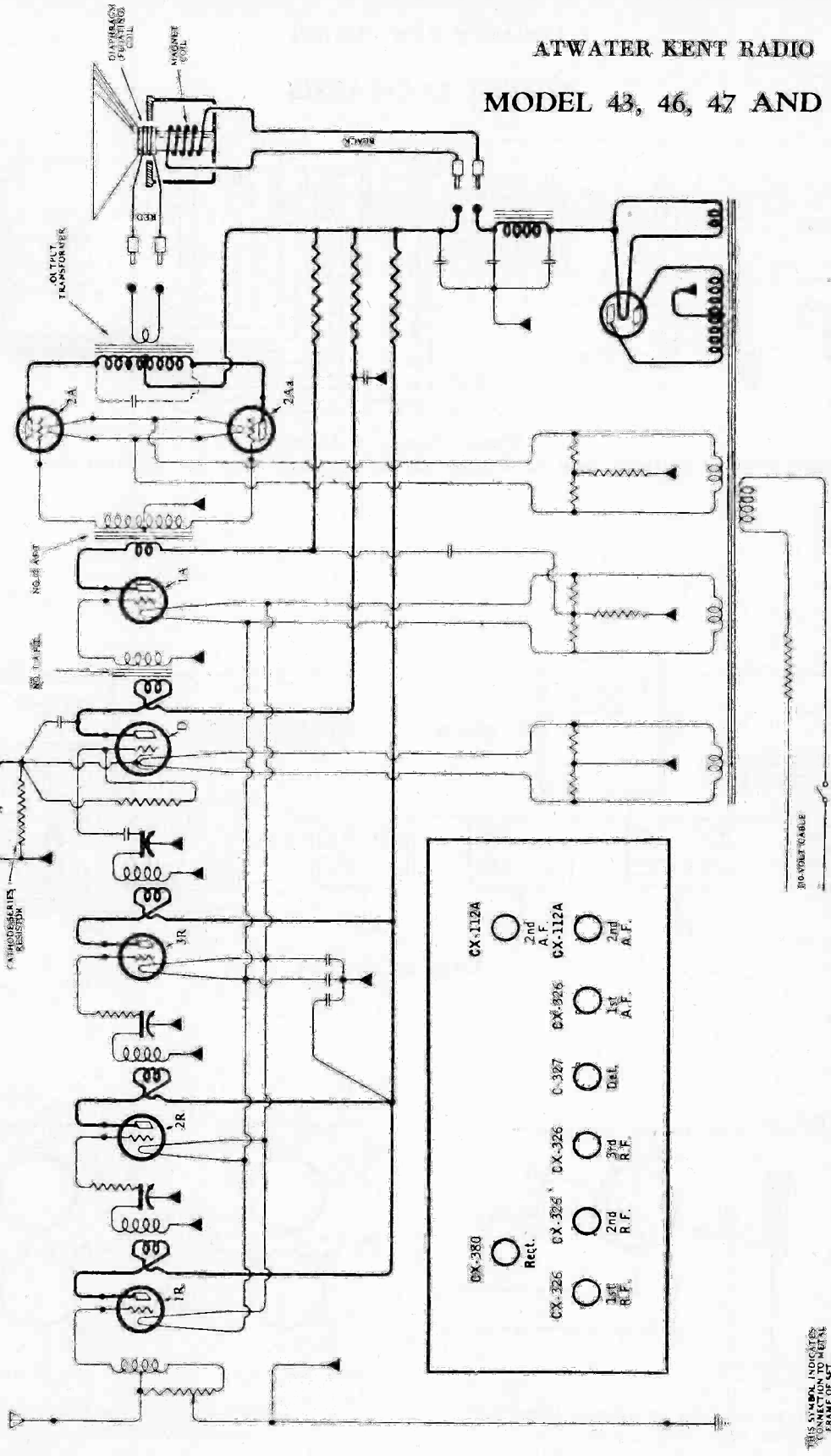

DIAGRAM OF MODEL 43, 46 AND 53. (The output transformer is sealed in the power unit.)

Model 47 is similar to this but has one extra stage of R. F. amplification and a local-distance switch similar to that in Model 44.

For value of parts see drawing on next page.

MODEL 43, 46, 47 AND 53 DIAGRAM

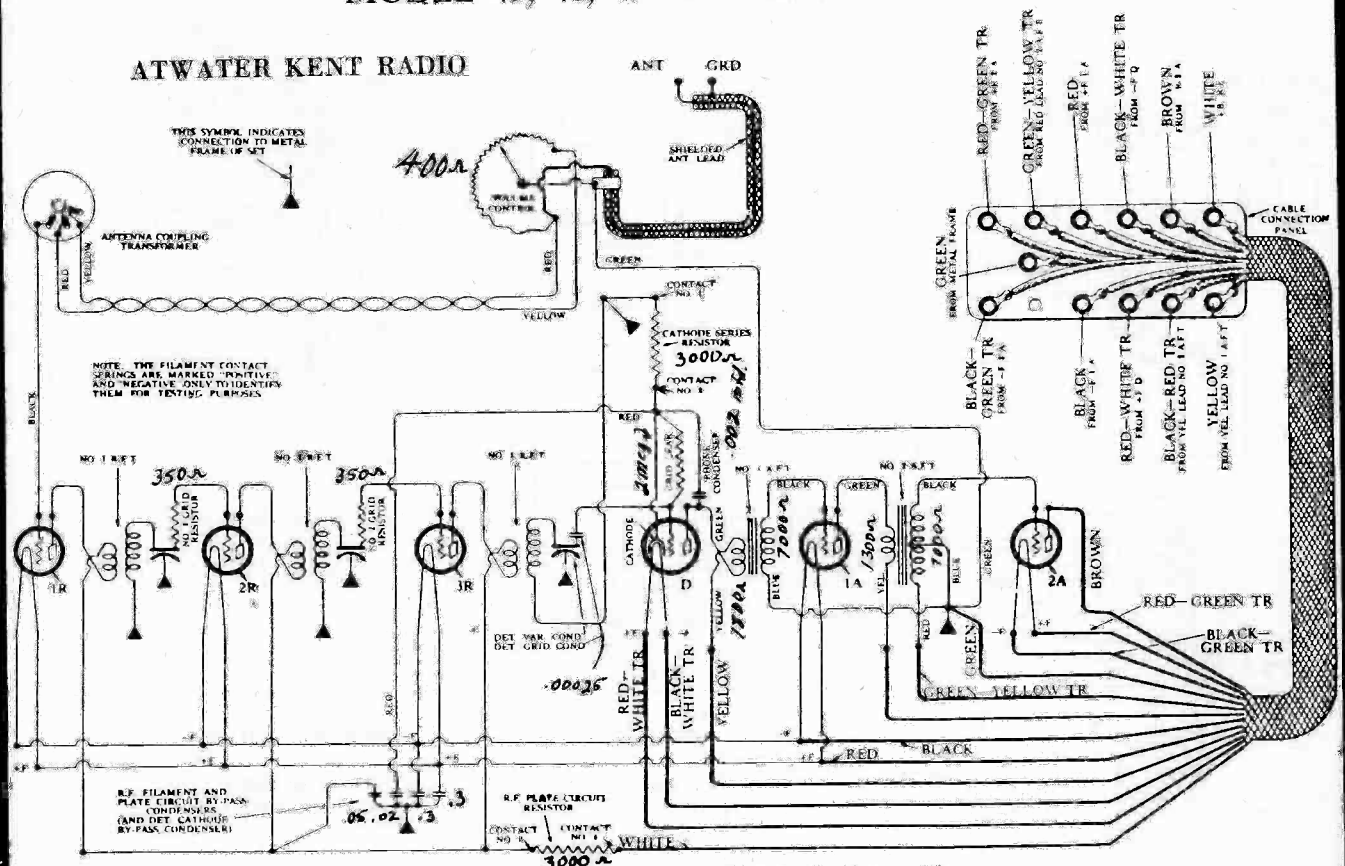

WIRING DIAGRAM OF MODEL 43, 46 AND 53.
The +B, 1st A. F. cable lead is black with a red tracer.
Model 47 is similar but has one additional stage of R. F. amplification and a local-distance switch like that on Model 44.

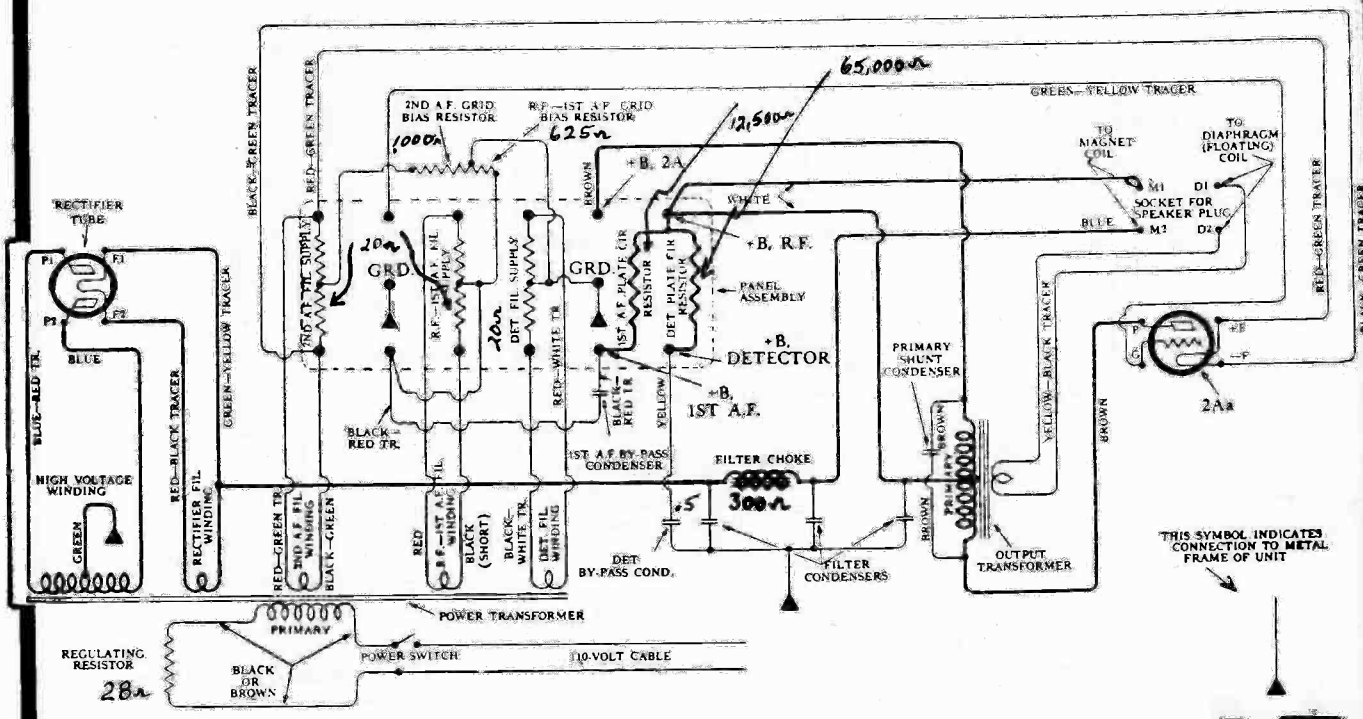

WIRING DIAGRAM OF POWER UNIT IN MODEL 43.

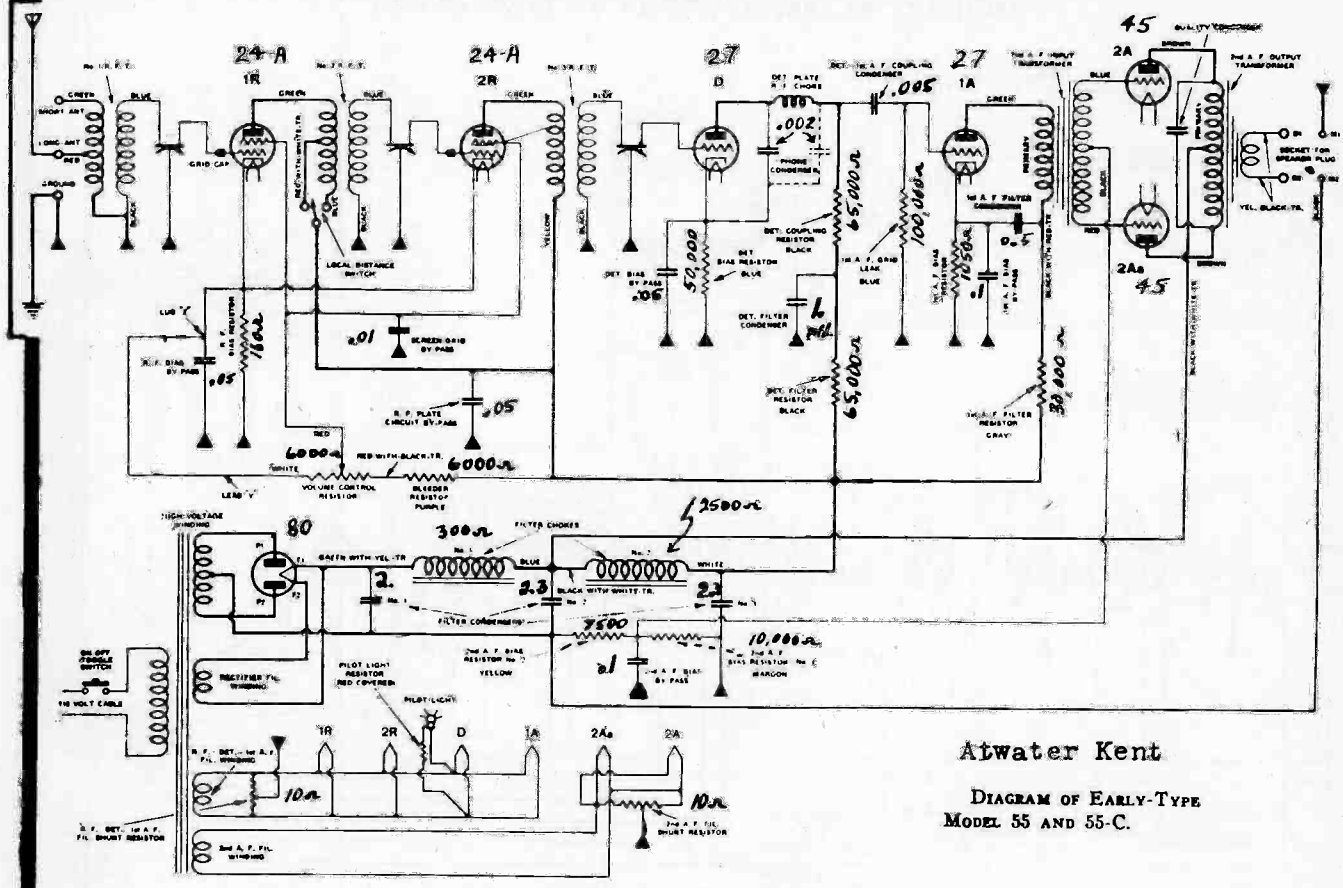

Atwater Kent

DIAGRAM OF EARLY-TYPE MODEL 55 AND 55-C.

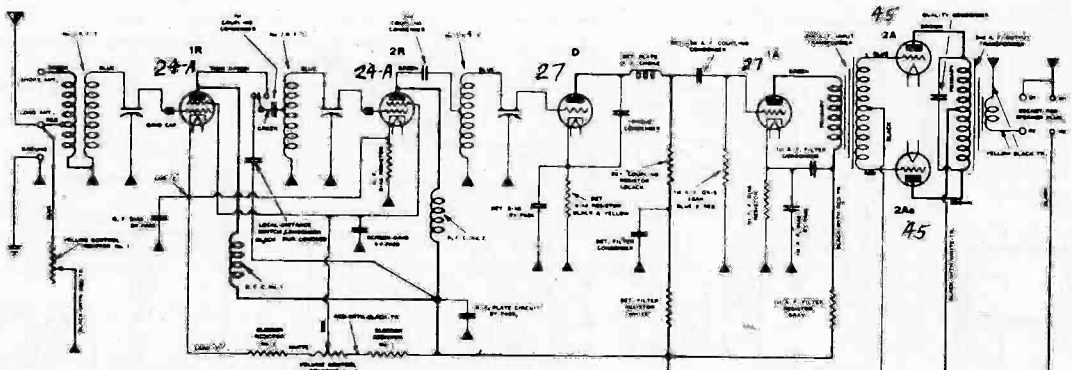

See above circuit for value of parts.

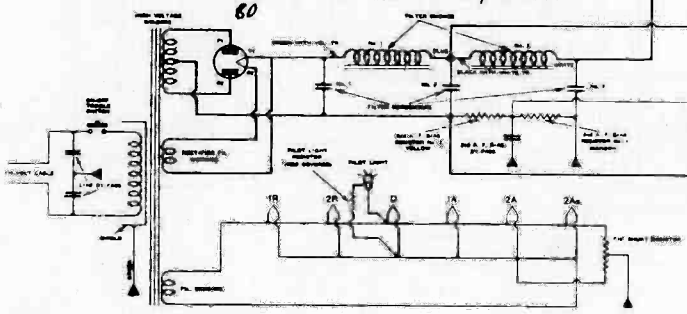

DIAGRAM OF LATER-TYPE MODEL 55 AND 55-C.

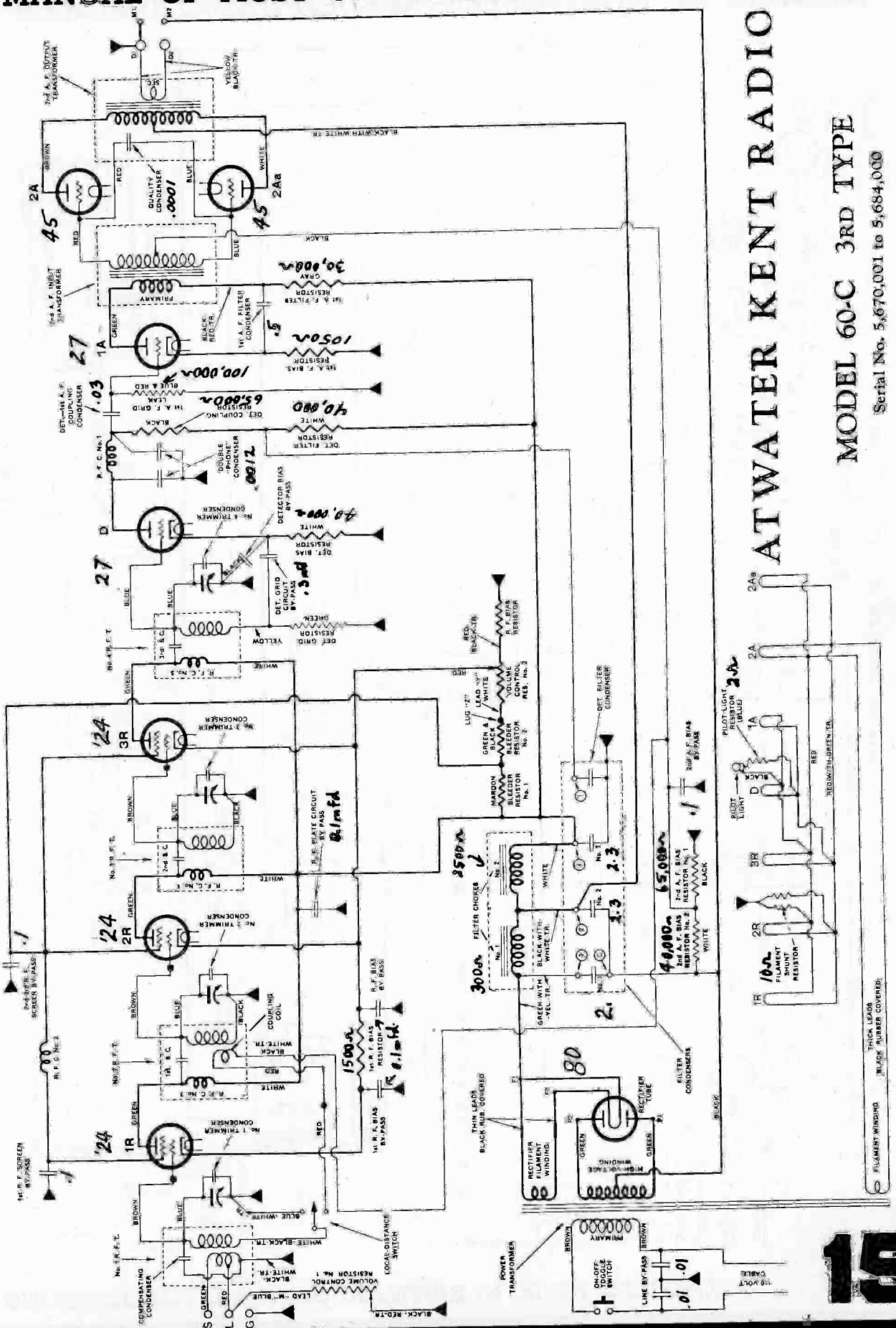
ATWATER KENT RADIO
MODEL 60-C 3RD TYPE
Serial No. 5,670,001 to 5,684,000
2nd A. F. OUTPUT TRANSFORMER
2nd A. F. INPUT TRANSFORMER
QUALITY CONDENSER .0001
1st A. F. FILTER CONDENSER .5
1st A. F. FILTER RESISTOR 30,000Ω
1st A. F. BIAS RESISTOR 10,500Ω
1st A. F. GRID LEAK 100,000Ω
DET. COUPLING RESISTOR 65,000Ω
DET. FILTER RESISTOR 40,000
DET. BIAS RESISTOR 40,000Ω
DETECTOR BIAS BY-PASS .5 mfd
DET. GRID CIRCUIT BY-PASS
DOUBLE "PHONE" CONDENSER .0002
DET. GRID RESISTOR
R. F. BIAS RESISTOR
VOLUME CONTROL RES. No. 2
BLEEDER RESISTOR No. 2
BLEEDER RESISTOR No. 1
DET. FILTER CONDENSER
PILOT LIGHT RESISTOR (BLUE)
PILOT LIGHT
2nd A. F. BIAS BY-PASS .1
2nd A. F. BIAS RESISTOR No. 1
2nd A. F. BIAS RESISTOR No. 2
FILAMENT SHUNT RESISTOR 10Ω
THICK LEADS BLACK RUBBER COVERED
FILAMENT WINDING
FILTER CONDENSERS
FILTER CHOKES
RECTIFIER TUBE
RECTIFIER FILAMENT WINDING
HIGH VOLTAGE WINDING
THIN LEADS BLACK RUB. COVERED
R. F. PLATE CIRCUIT BY-PASS .01 mfd
R. F. BIAS BY-PASS .1 mfd
1st R. F. BIAS RESISTOR .7
1500Ω
COUPLING COIL
No. 1 TRIMMER CONDENSER
No. 2 TRIMMER CONDENSER
No. 3 TRIMMER CONDENSER
No. 4 TRIMMER CONDENSER
R. F. C. No. 1
R. F. C. No. 2
R. F. C. No. 3
R. F. C. No. 4
R. F. C. No. 5
1st R. F. SCREEN BY-PASS
2nd-3rd R. F. SCREEN BY-PASS
R. F. C. No. 2
COMPENSATING CONDENSER
LOCAL-DISTANCE SWITCH
VOLUME CONTROL RESISTOR No. 1
POWER TRANSFORMER
ON-OFF DOUBLE SWITCH
LINE BY-PASS .01
TO VOLT CABLE
PRIMARY
SECONDARY
YELLOW-BLACK TR.
BLACK-WITH-WHITE TR.
BLACK-WITH-WHITE-TR.
GREEN-WITH-YEL. TR.
RED-WITH-GREEN TR.
LEAD "M"-BLUE
BLACK-RED-TR.
LEAD "M"-BLUE
S
L
G
M1
M2
D1
D2
SEC.
2A
2Aa
1A
3R
2R
1R
D
45
27
24
80
1.03
.5
.01
.01
2.3
2.3
300Ω
3500Ω
65,000Ω
40,000Ω
10Ω
1500Ω

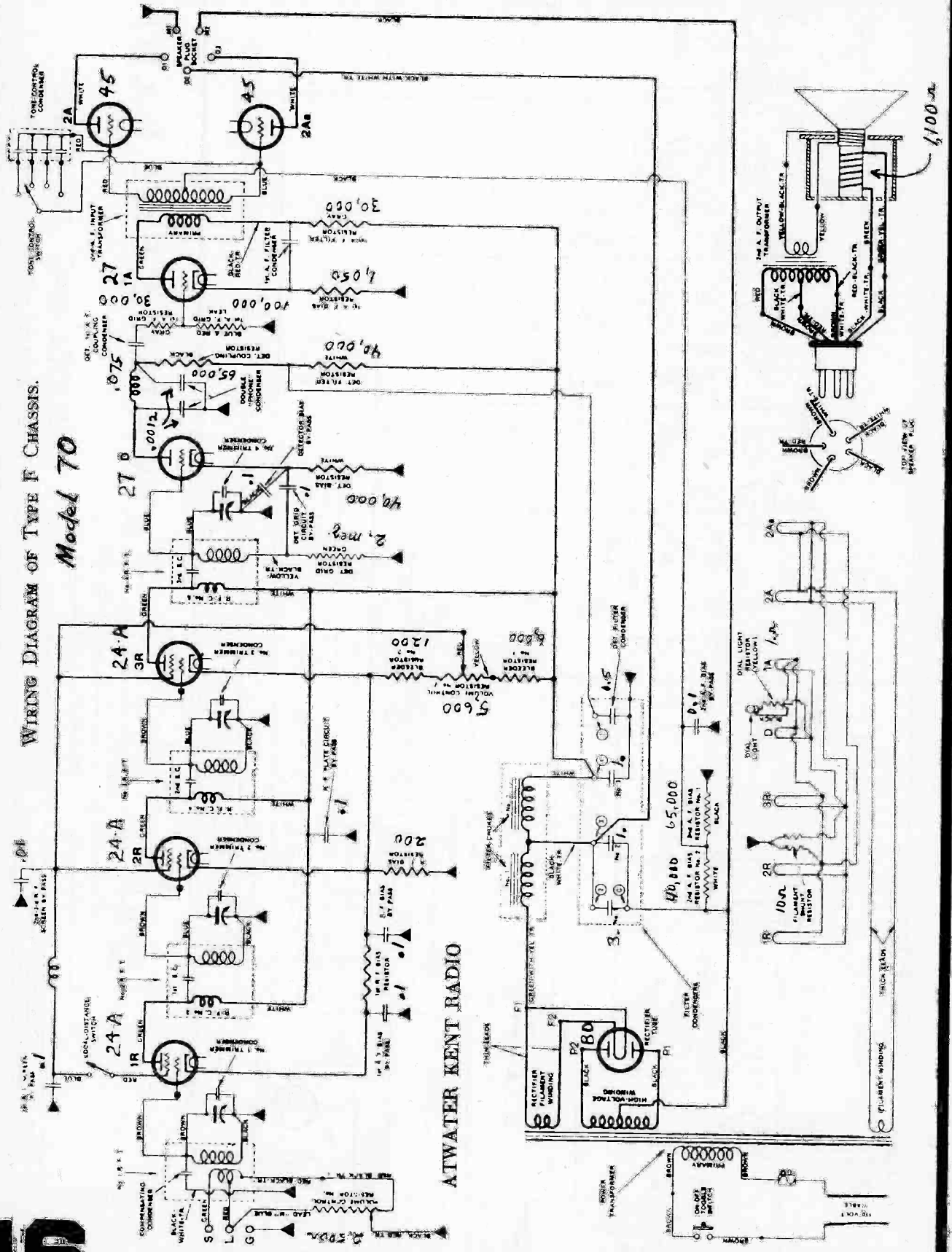
WIRING DIAGRAM OF TYPE F CHASSIS.
Model 70
ATWATER KENT RADIO

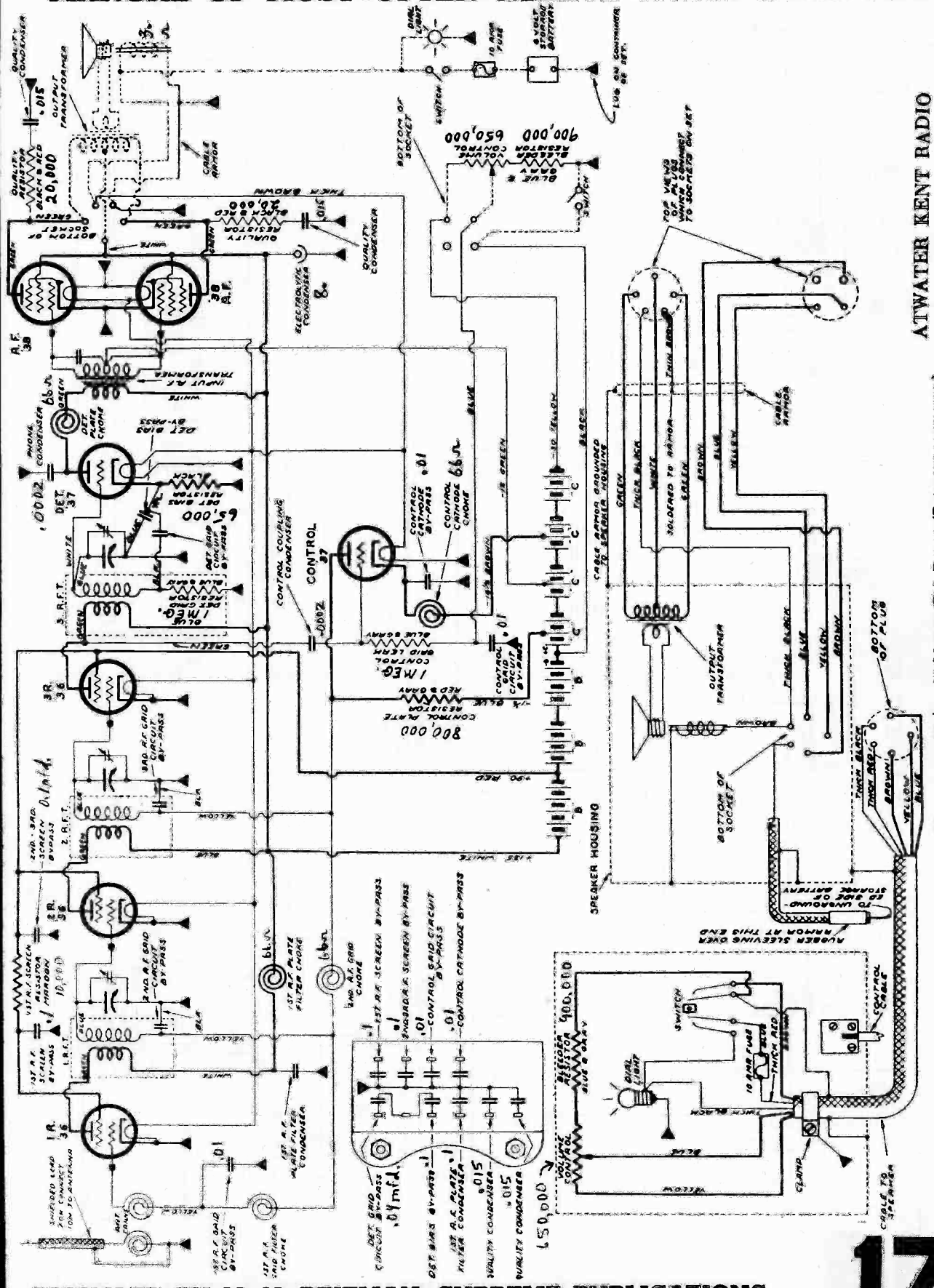
ATWATER KENT RADIO
DIAGRAM OF MODEL 81 MOTOR CAR RADIO (BATTERY-OPERATED).
QUALITY CONDENSER
.015
OUTPUT TRANSFORMER
QUALITY RESISTOR
20,000
CABLE ARMOR
BOTTOM OF SOCKET
SWITCH
DIAL LIGHT
10 AMP FUSE
6 VOLT STORAGE BATTERY
LUG ON SOUNDBOX OF SET
900,000
650,000
BLUE & GRAY
ELECTRON VOLUME CONTROL
RESISTOR
QUALITY RESISTOR
20,000
QUALITY CONDENSER
ELECTROLYTIC CONDENSER
A.F. 38
INPUT A.F. TRANSFORMER
DET PLATE CHOKE
PHONE CONDENSER
.0002
DET. 37
DET BIAS BY-PASS
DET BIAS RESISTOR
65,000
DET GRID CIRCUIT BY-PASS
3 R.F.T.
BLUE & GRAY
1 MEG.
CONTROL GRID LEAK
CONTROL COUPLING CONDENSER
CONTROL 37
CONTROL CATHODE BY-PASS
CONTROL CATHODE CHOKE
CONTROL GRID CIRCUIT BY-PASS
CONTROL PLATE RESISTOR
800,000
RED & GRAY
3R 38
2ND R.F. GRID CIRCUIT BY-PASS
2ND. GRID SCREEN BY-PASS
2 R.F.T.
2R 38
2ND R.F. GRID CIRCUIT BY-PASS
1ST A.F. SCREEN RESISTOR
MAROON
10,000
1 R.F.T.
1R 38
1ST R.F. PLATE FILTER CHOKE
2ND A.F. GRID CHOKE
1ST A.F. PLATE FILTER CONDENSER
SHIELDED LEAD FROM CONNECTION TO ANTENNA
ANT. TRIMMER
1ST R.F. GRID CIRCUIT BY-PASS
1ST A.F. GRID FILTER CHOKE
1ST R.F. SCREEN BY-PASS
2ND R.F. SCREEN BY-PASS
CONTROL GRID CIRCUIT BY-PASS
CONTROL CATHODE BY-PASS
DET. GRID CIRCUIT BY-PASS
.01 mfd.
DET. BIAS BY-PASS
1ST A.F. PLATE FILTER CONDENSER
QUALITY CONDENSER
.015
150,000
SPEAKER HOUSING
CABLE ARMOR GROUNDED TO SPEAKER HOUSING
TOP VIEWS OF PLUGS WHICH CONNECT TO SOCKETS ON SET
OUTPUT TRANSFORMER
BOTTOM OF SOCKET
BOTTOM OF PLUG
ALUMINUM SLEEVING OVER ARMOR AT THIS END
TO UNGROUND END OF SOURCE OF STORAGE BATTERY
QUALITY RESISTOR
400,000
BLUE & GRAY
SWITCH
DIAL LIGHT
10 AMP FUSE
CONTROL CABLE
CLAMP
CABLE TO SPEAKER

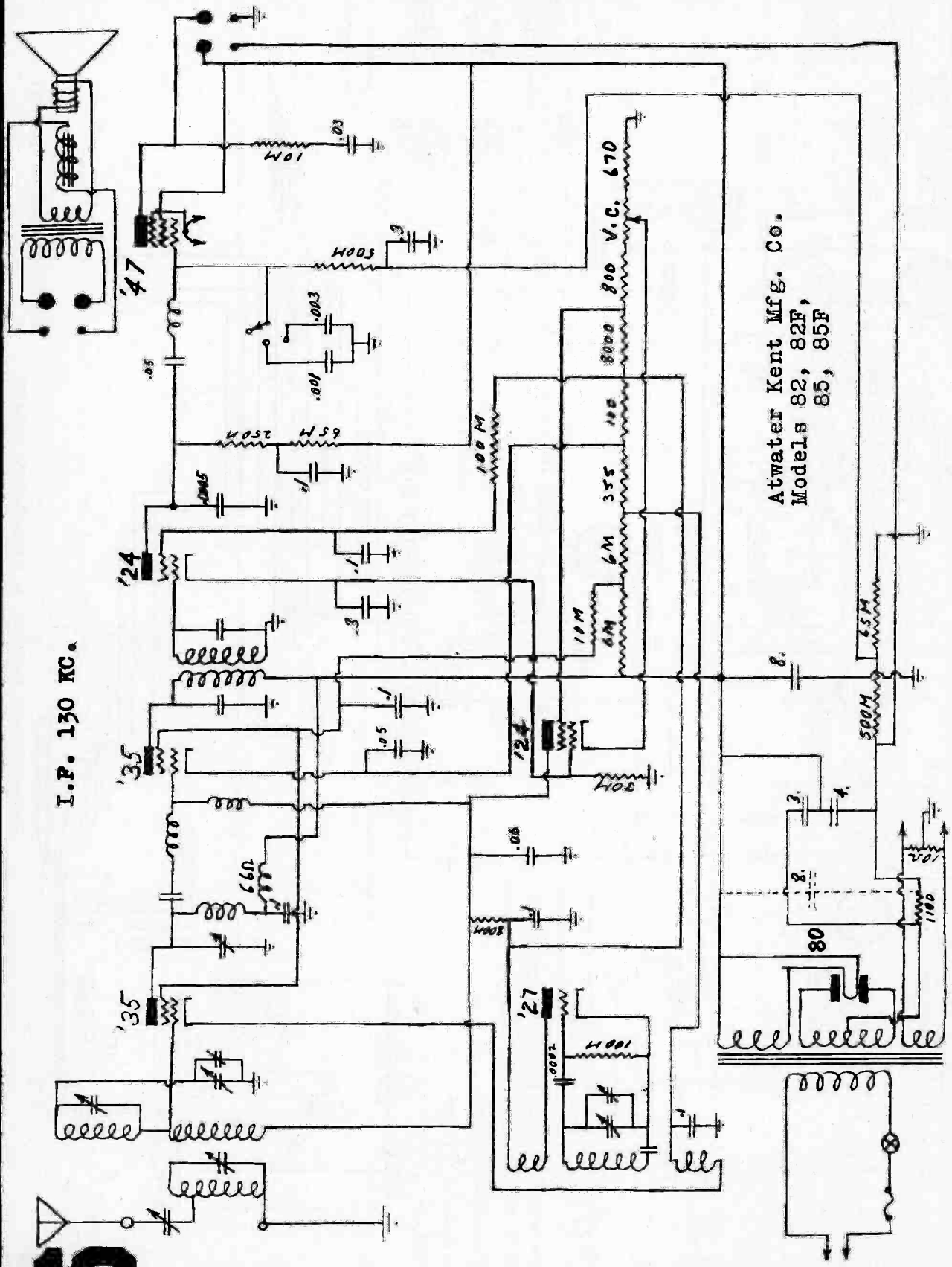
Atwater Kent Mfg. Co.
Models 82, 82F,
85, 85F
I.F. 130 KC.
V.C. 670
'47
'24
'35
'24
'35
'27
80

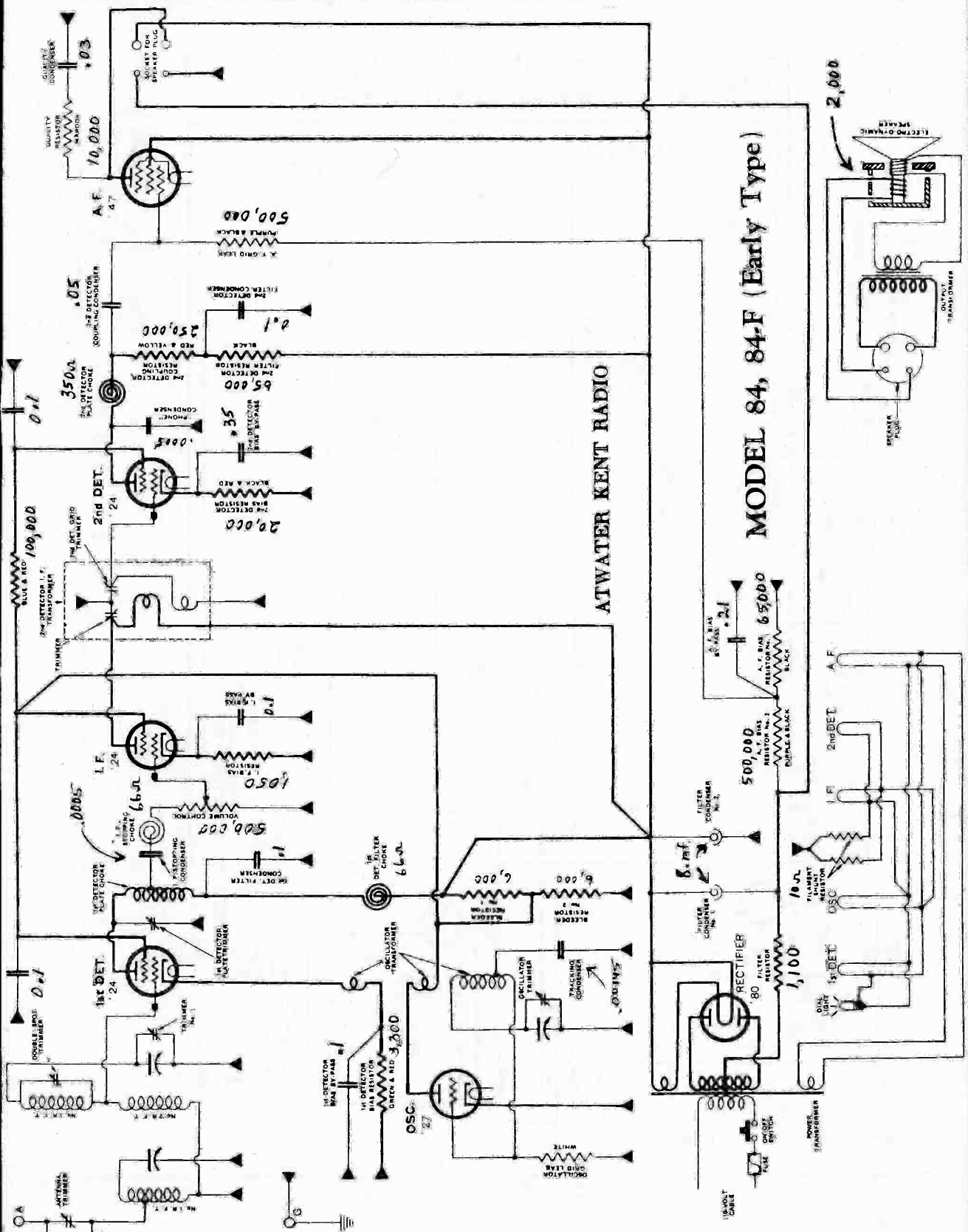

DIAGRAM OF EARLY-TYPE MODEL 84 AND 84-F (A. C.-OPERATED).

ATWATER KENT RADIO

MODEL 84, 84-F (Late Type)

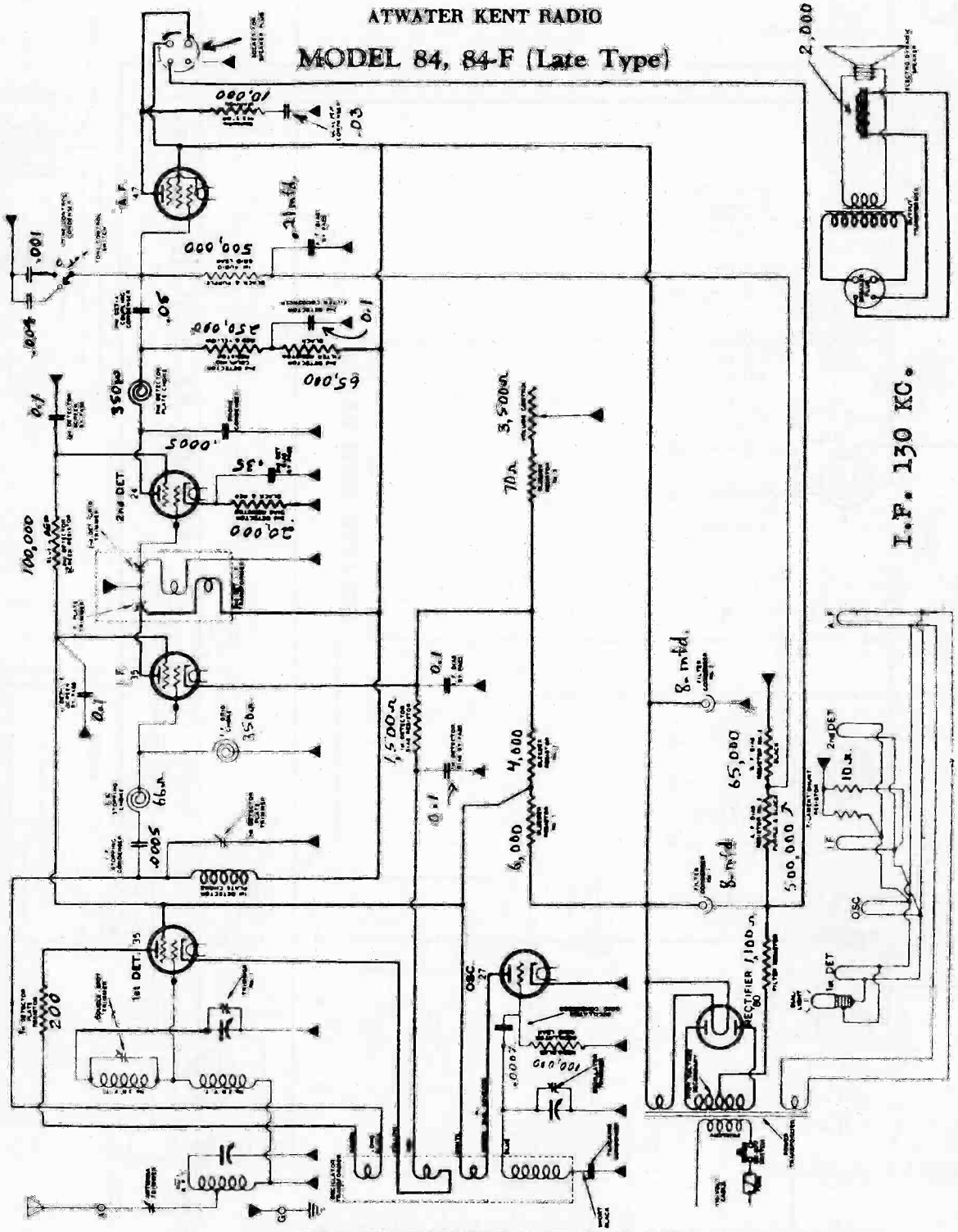

DIAGRAM OF LATE-TYPE MODEL 84 AND 84-F (A. C.-OPERATED).

A few late-type Model 84 and 84-F receivers have slightly different oscillator transformers, as explained in the notes accompanying the parts list for these sets.
The filter resistor shown in the above diagram is NOT used in Model 84-F.
This set has a 1st-detector plate filter choke and condenser not shown in the diagram.

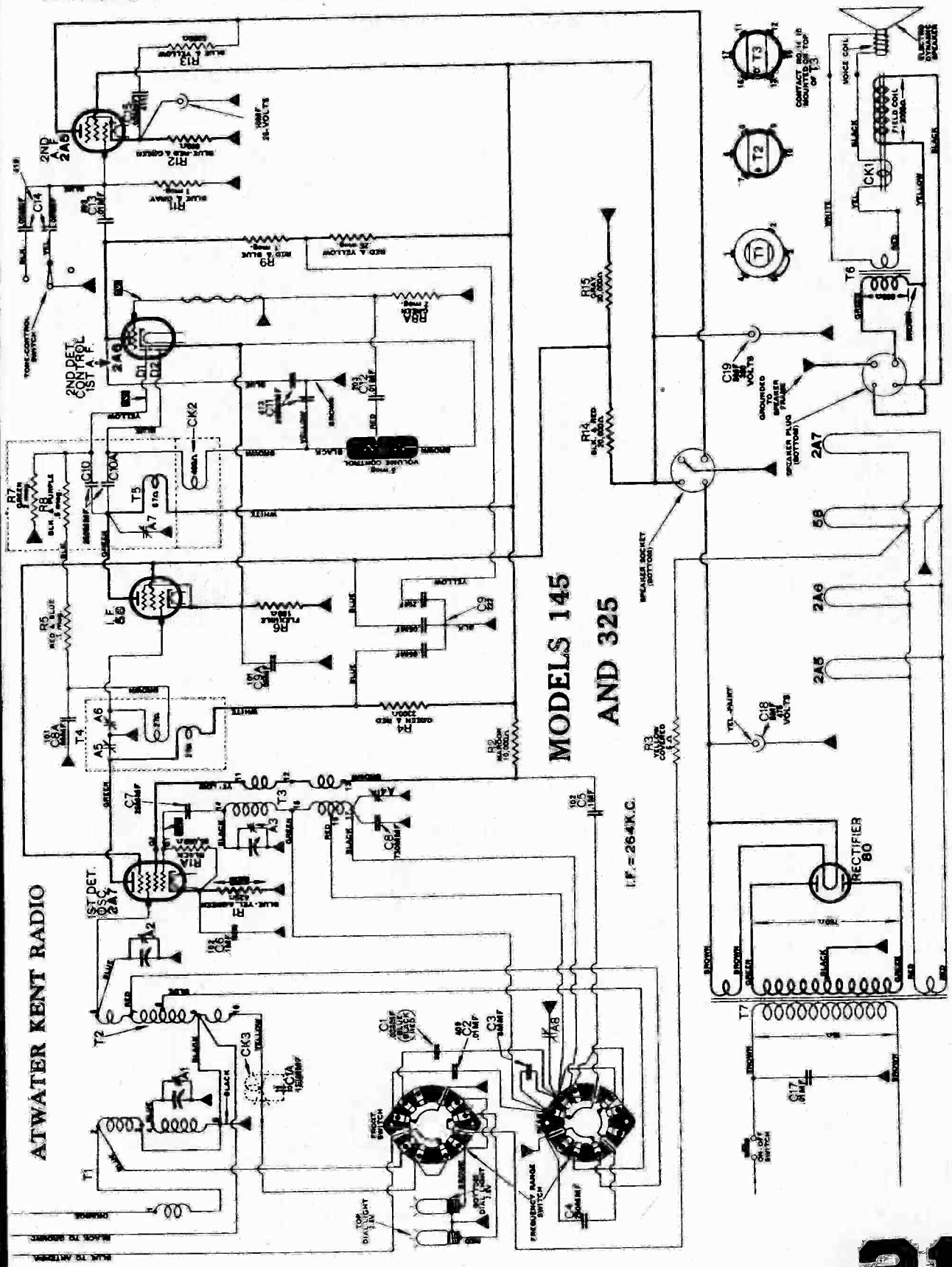
ATWATER KENT RADIO
MODELS 145
AND 325
I.F. = 264 K.C.
1ST DET. OSC. 2A7
2ND DET. CONTROL 1ST A.F.
2ND I.F. 2A6
I.F. 58
2A7
58
2A6
2A5
RECTIFIER 80
T1
T2
T3
T4
T5
T6
T7
CK1
CK2
CK3
R1
R2
R3
R4
R5
R6
R7
R8
R9
R10
R11
R12
R13
R14
R15
C1
C2
C3
C4
C5
C6
C7
C8
C9
C10
C13
C14
C17
C18
C19
TONE CONTROL SWITCH
VOLUME CONTROL
FREQUENCY RANGE SWITCH
ON-OFF SWITCH
SPEAKER SOCKET (BOTTOM)
SPEAKER PLUG (BOTTOM)
VOICE COIL
FIELD COIL
PERMANENT DYNAMIC SPEAKER

MANUAL OF MOST-OFTEN-NEEDED RADIO DIAGRAMS

ATWATER KENT RADIO

MODEL 155, 1st TYPE, Below Serial No. 7086900

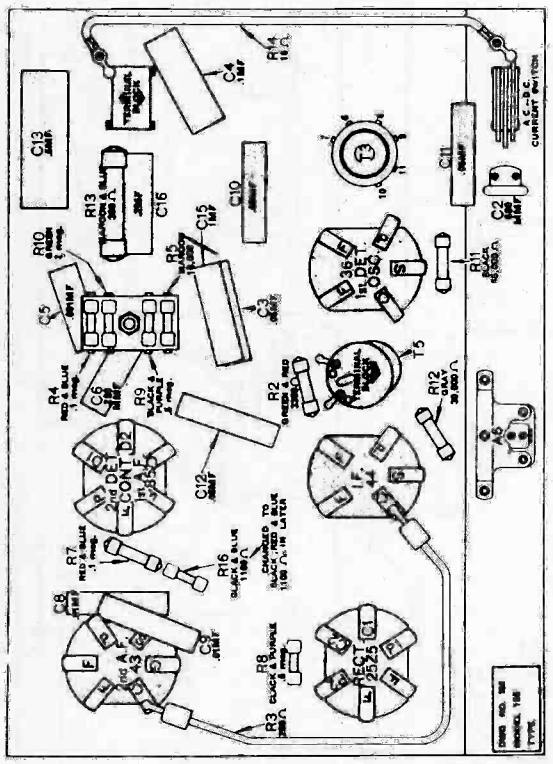

First arrangement of parts under chassis in 1st-type Model 155.

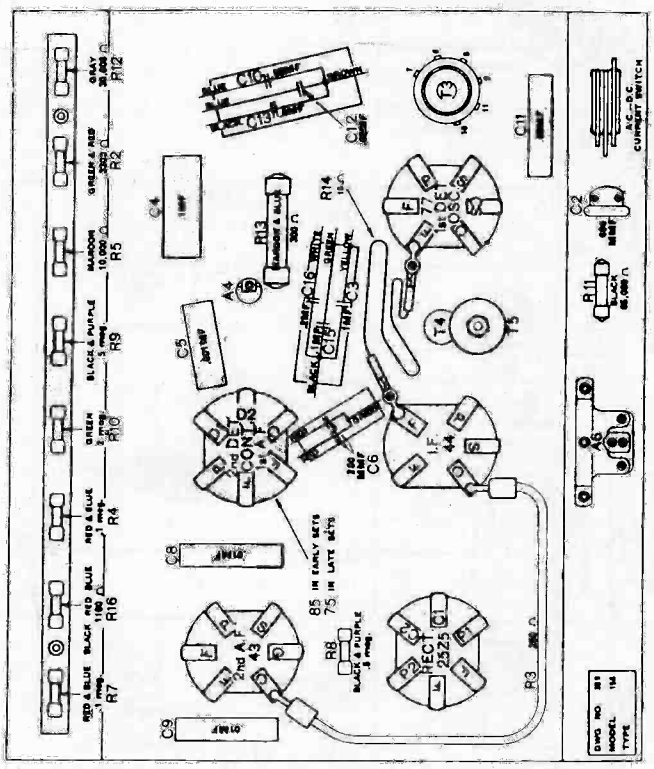

Third arrangement of parts under chassis in 1st-type Model 155.

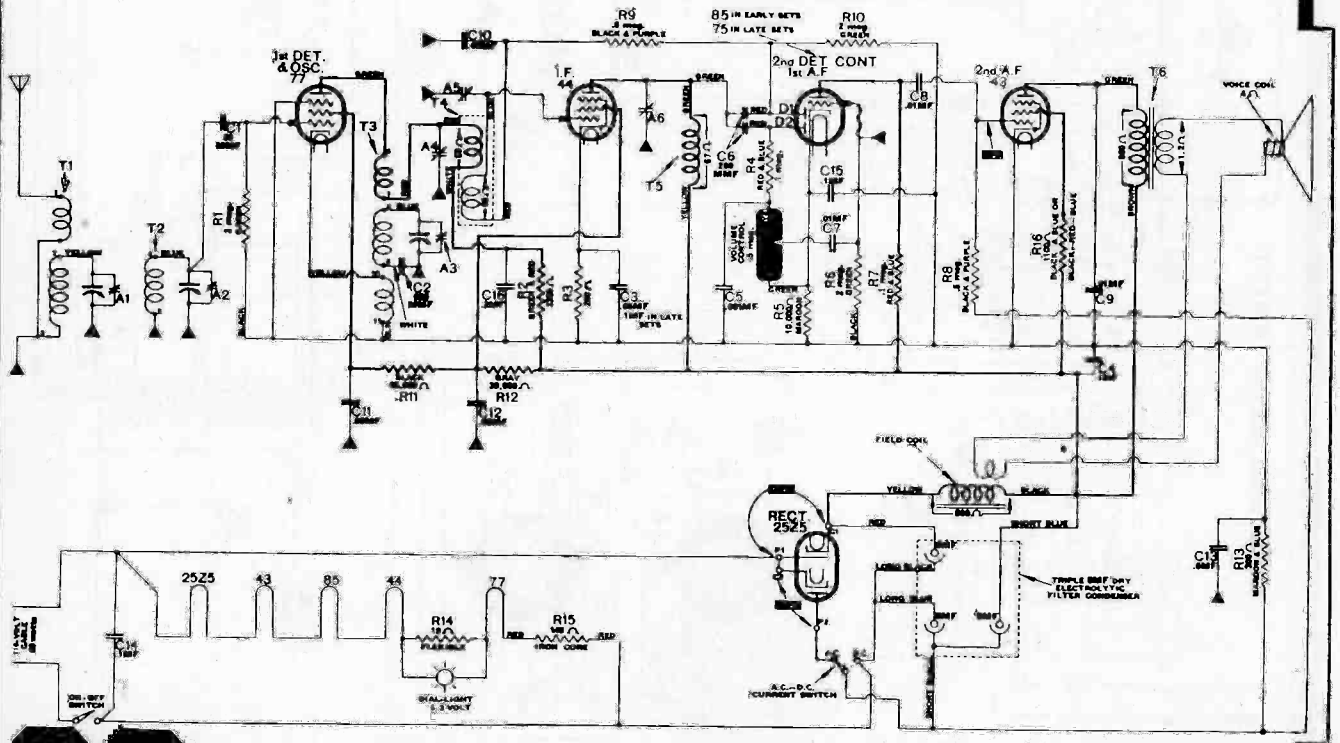

COMPILED BY M. N. BEITMAN, SUPREME PUBLICATIONS

MODEL 165 DIAGRAM

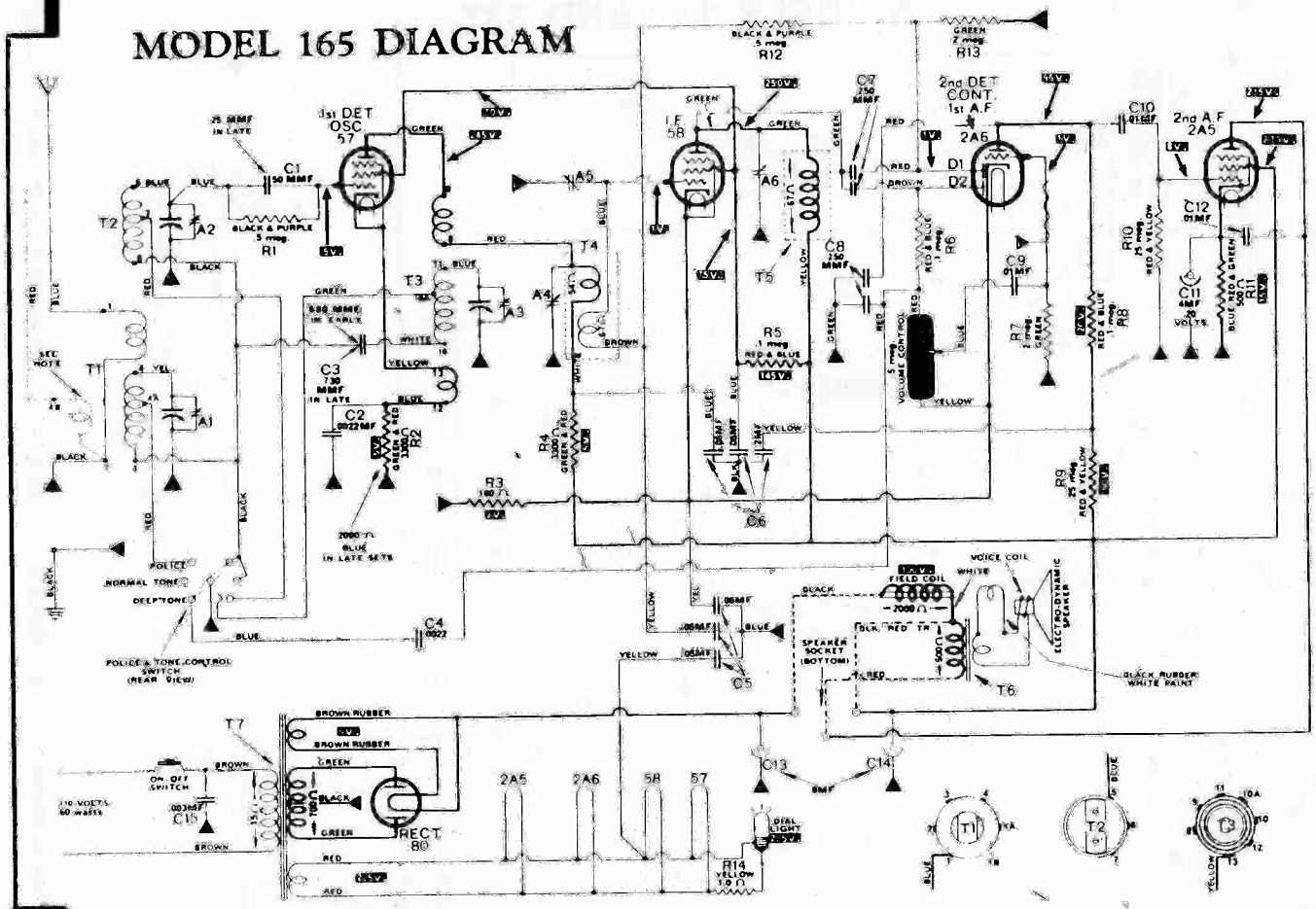

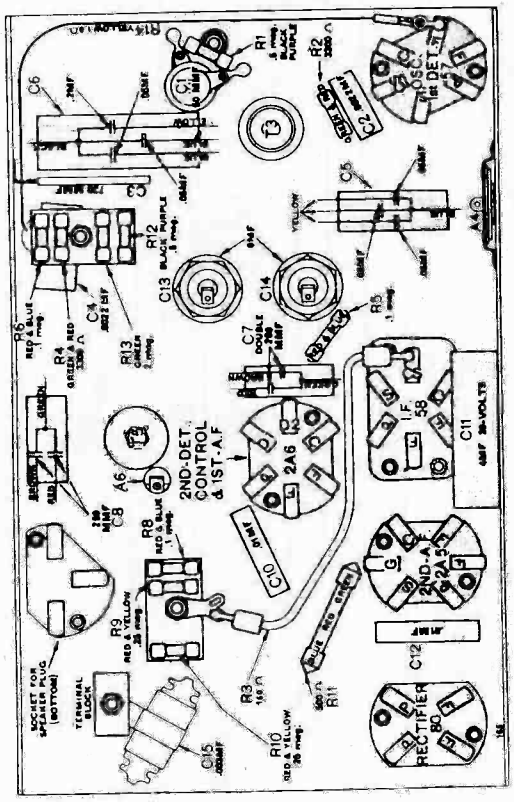

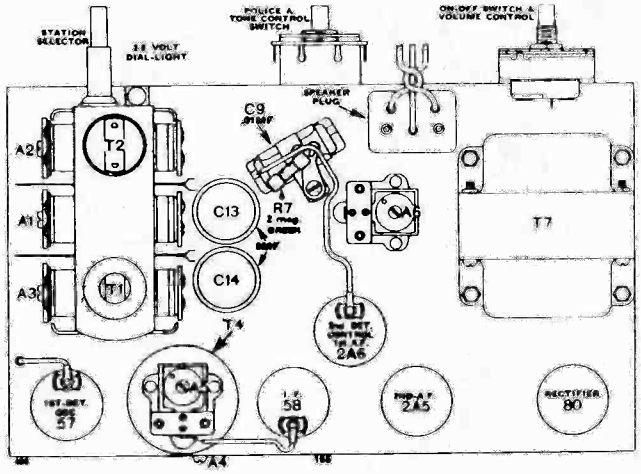

In late type 165, the 1st-detector bias resistor R2 is 2000 ohms, ½ watt (blue).

In a few early 165 sets, the tracking condenser C3 is 680MMF.

In late sets, C1 is 25MMF instead of 50MMF.

The additional primary, shown in dotted lines on No. 1 R.F.T., is used in some 165 sets.

I.F. 262.5 KC.

MANUAL OF MOST-OFTEN-NEEDED RADIO DIAGRAMS
MODELS 317 AND 337

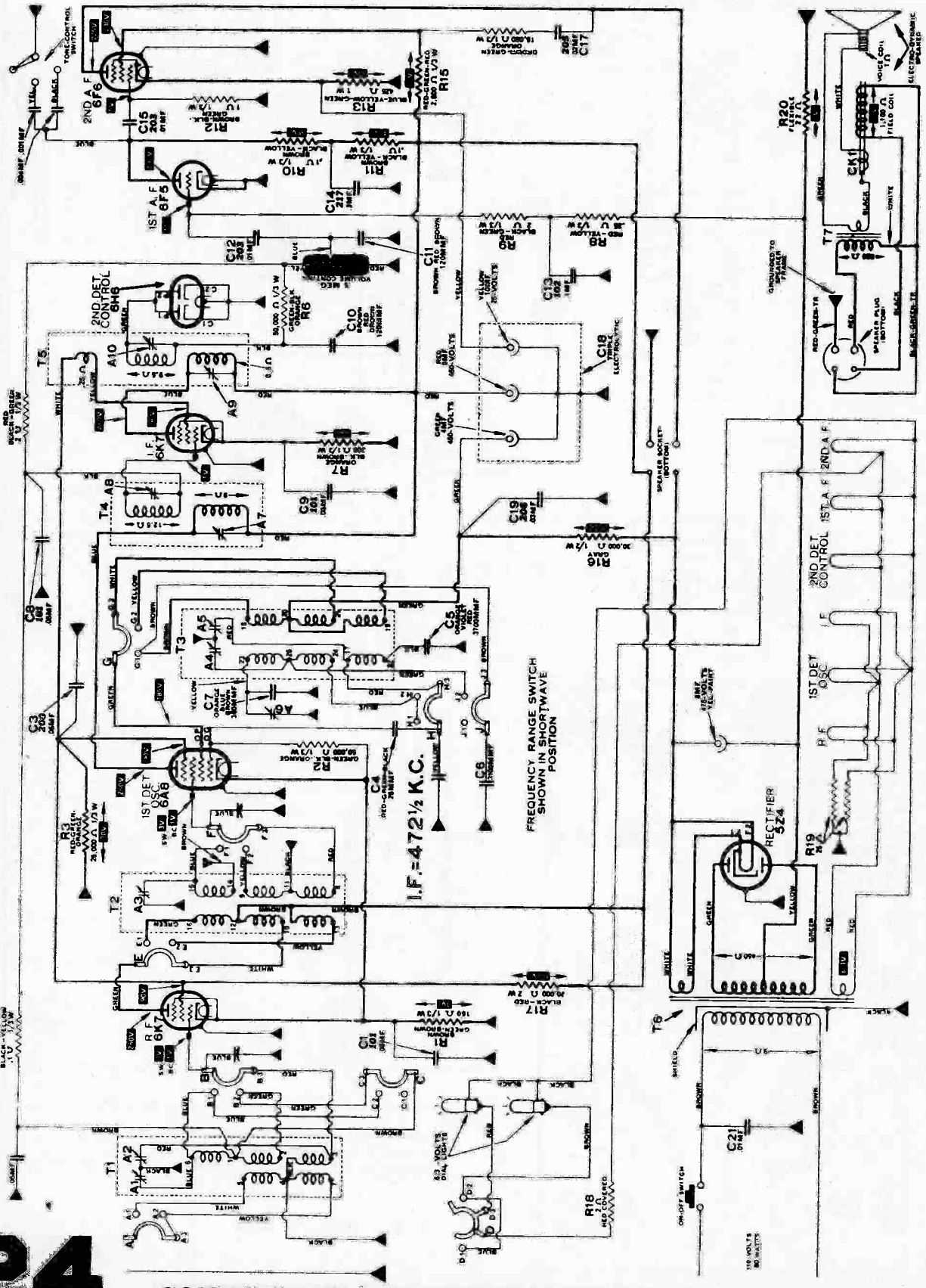

COMPILED BY M. N. BEITMAN, SUPREME PUBLICATIONS

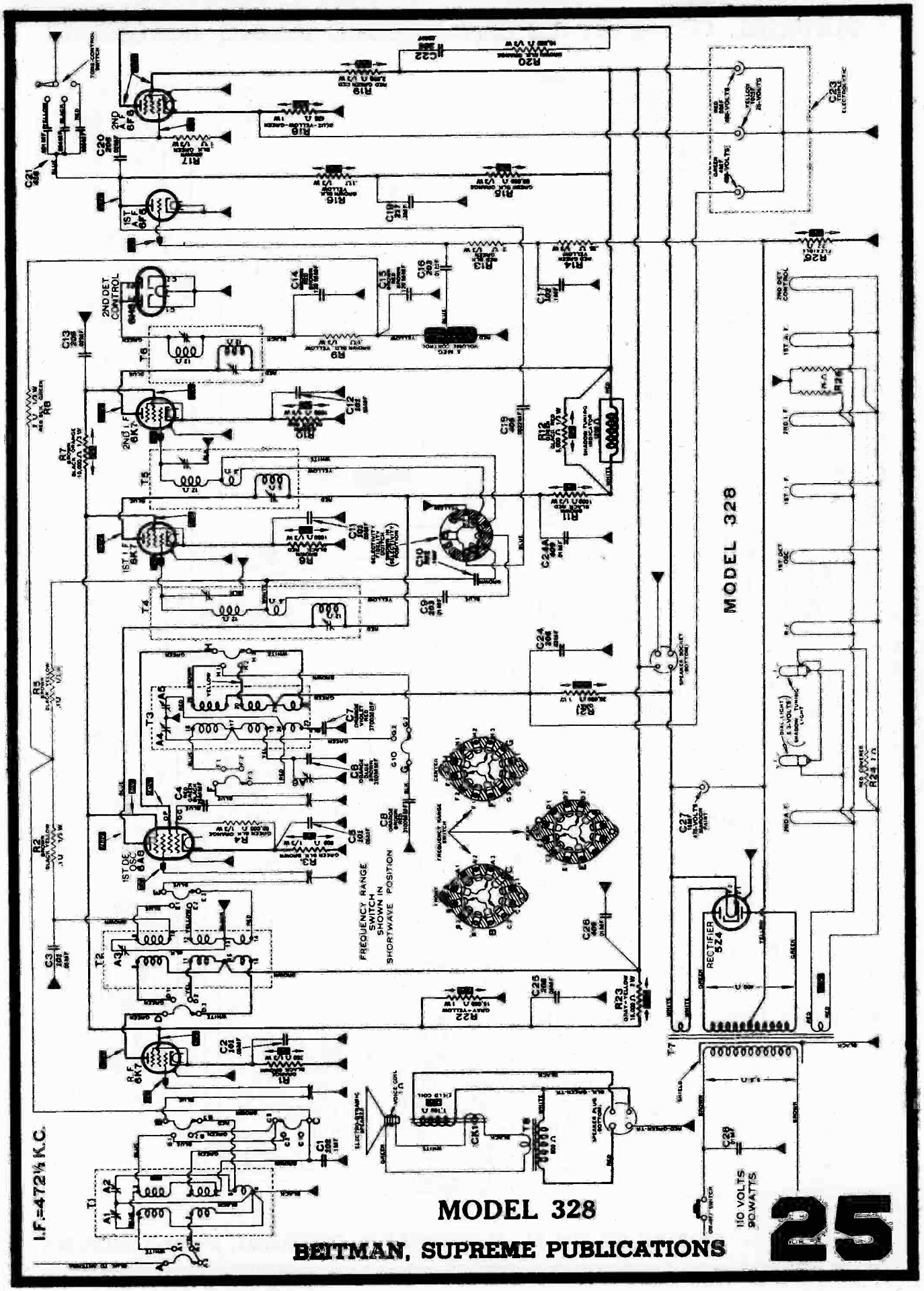

MODEL 328

BEITMAN, SUPREME PUBLICATIONS

ATWATER KENT RADIO

MODELS 856 AND 976

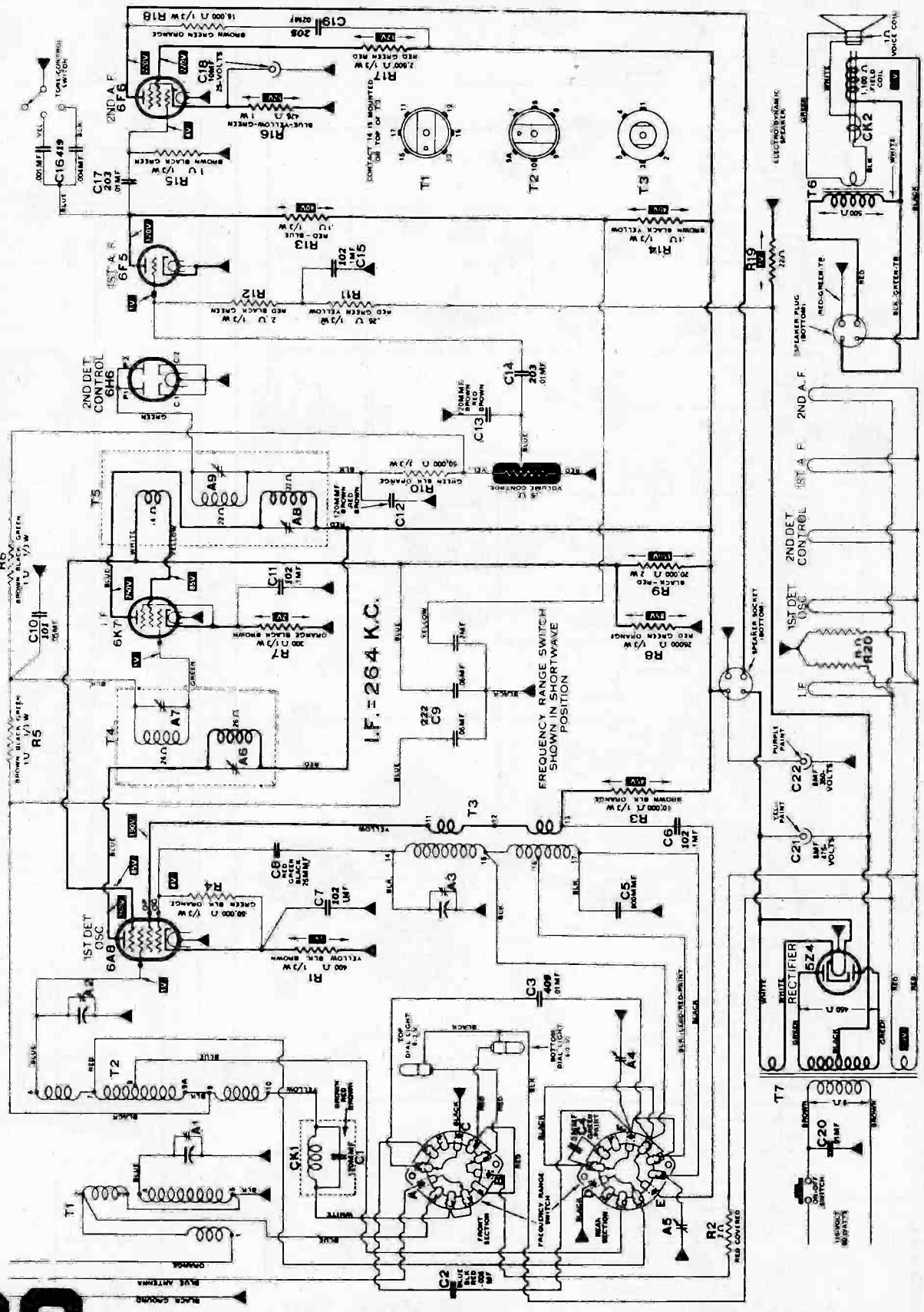

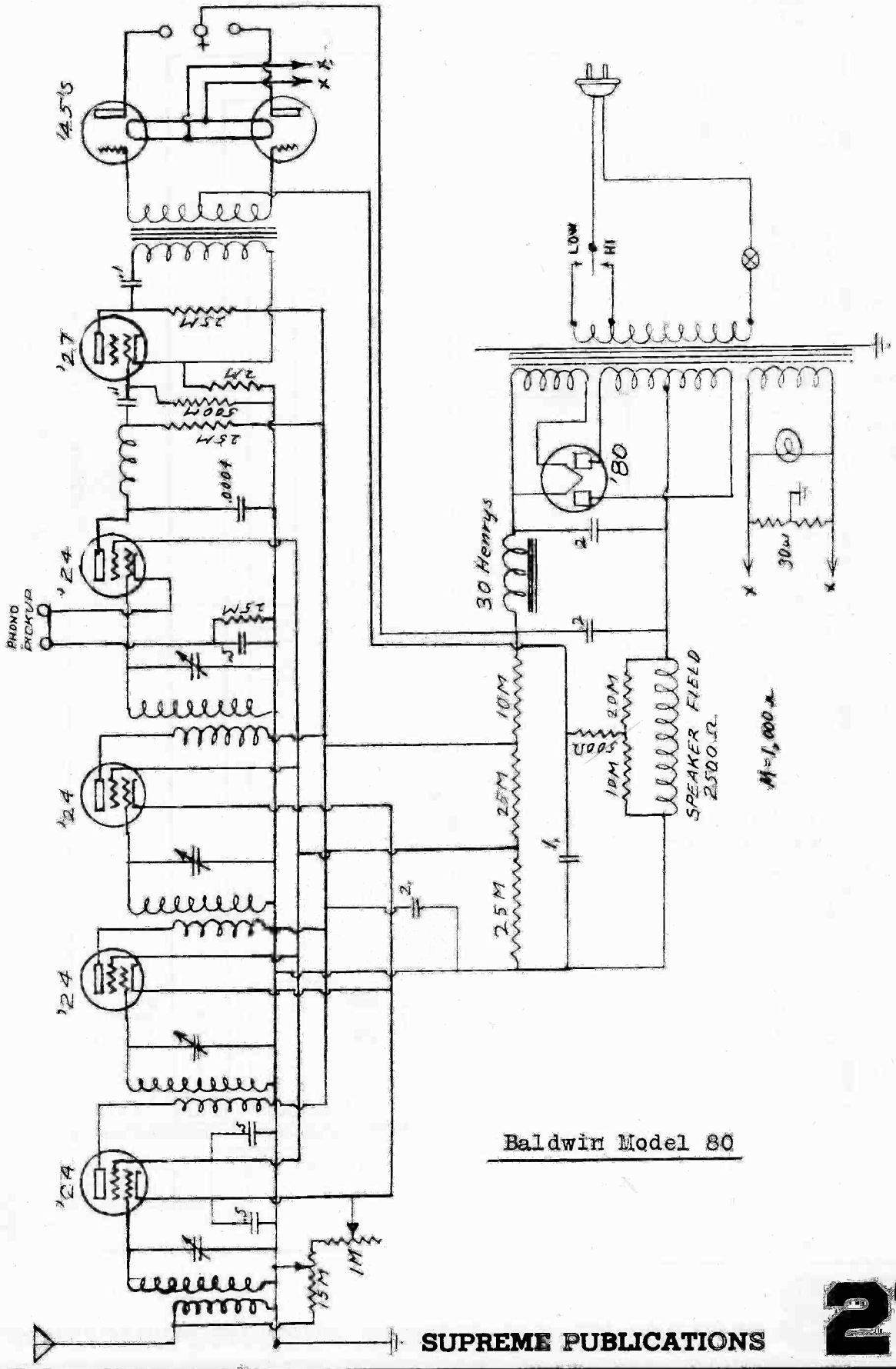

Baldwin Model 80

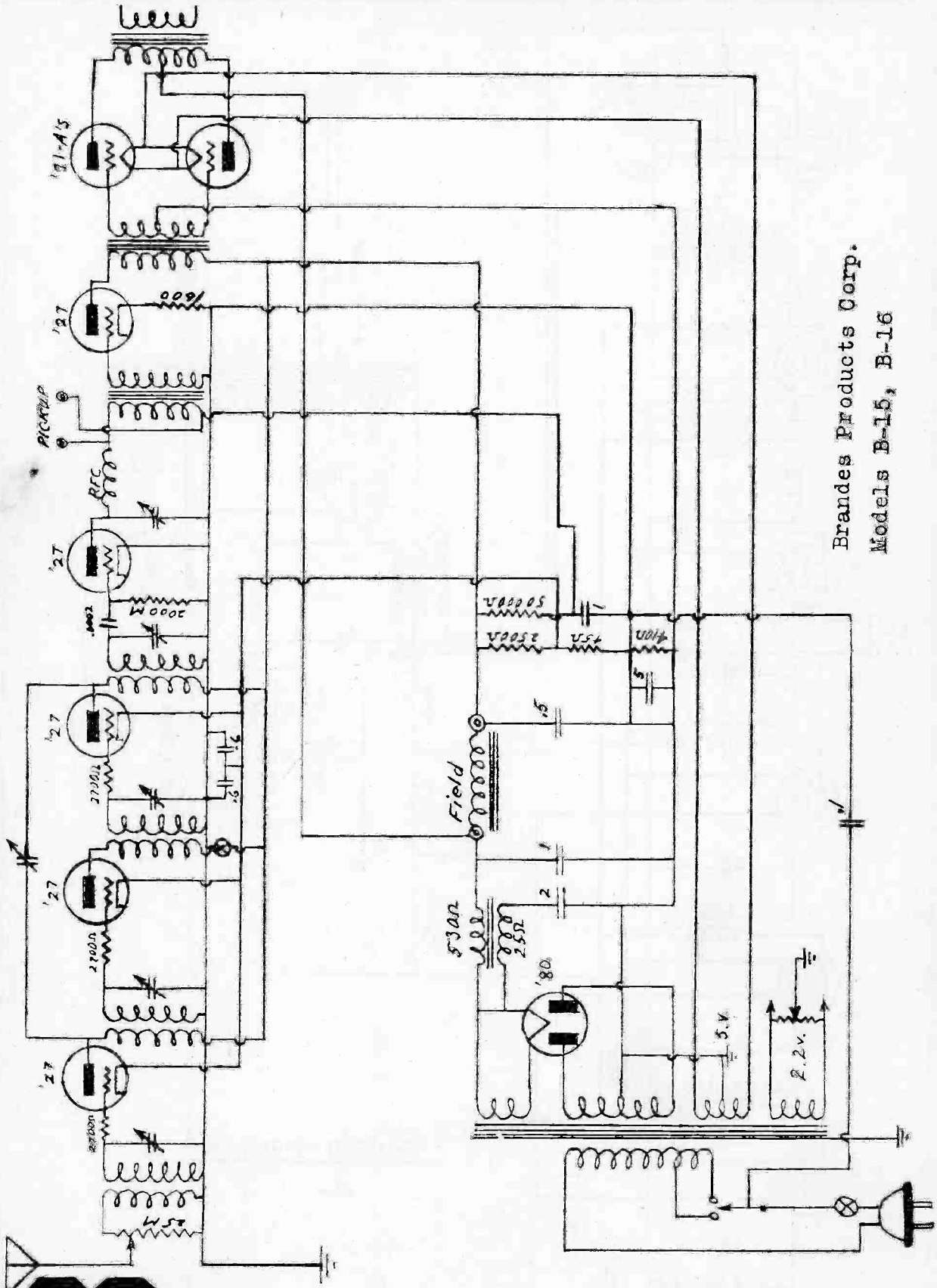

Brandes Products Corp.
Models B-15, B-16

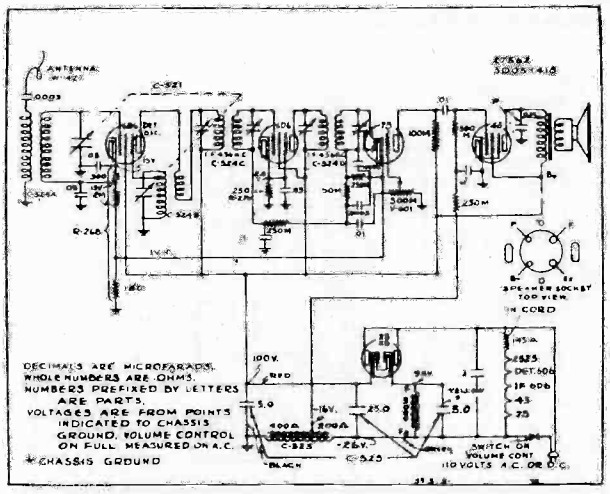

Schematic circuit diagram Model 525 AC-DC Superheterodyne, with automatic volume control

Should it be necessary, at any time, to rebalance this set the procedure is as follows: Attach a 456 kilocycle oscillator to the grid of the 6D6 tube in back of the variable condenser and adjust the trimming condensers of the I. F. transformers to maximum deflection on an output meter connected across the primary of the speaker input transformer. While adjusting these trimmers, the variable condenser should be at the maximum capacity position—at the extreme right of its rotation.

Next disconnect the antenna wire and connect an oscillator in series with a 75 mmf. condenser to the antenna coil. Rotate the condenser plates to the minimum capacity position—extreme left turn, and adjust the trimmer condenser of the rear section of the variable condenser to resonance with an oscillator set at 1725 kilocycles, then adjust the condenser of the front section of the variable condenser to resonance. Align at 1400—1200—1000—800—600—520 kilocycles. Lead slotted plates of variable condenser if necessary.

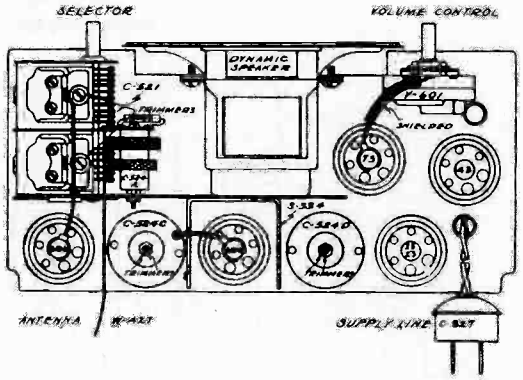

Belmont Radio Corp.

MODEL 525

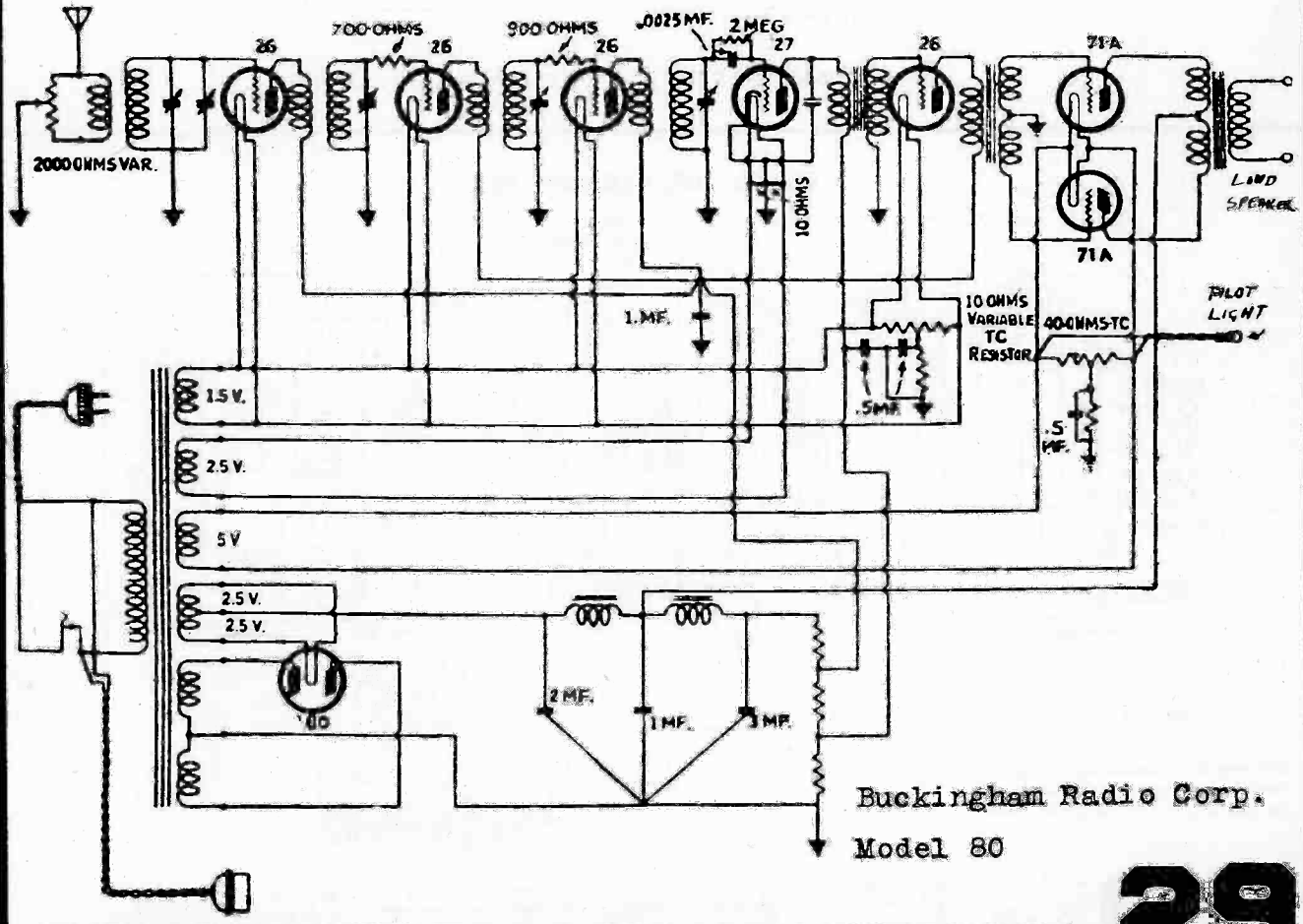

Buckingham Radio Corp.

Model 80

MANUAL OF MOST-OFTEN-NEEDED RADIO DIAGRAMS

MODELS 30S, 31S, 33S, 34S.

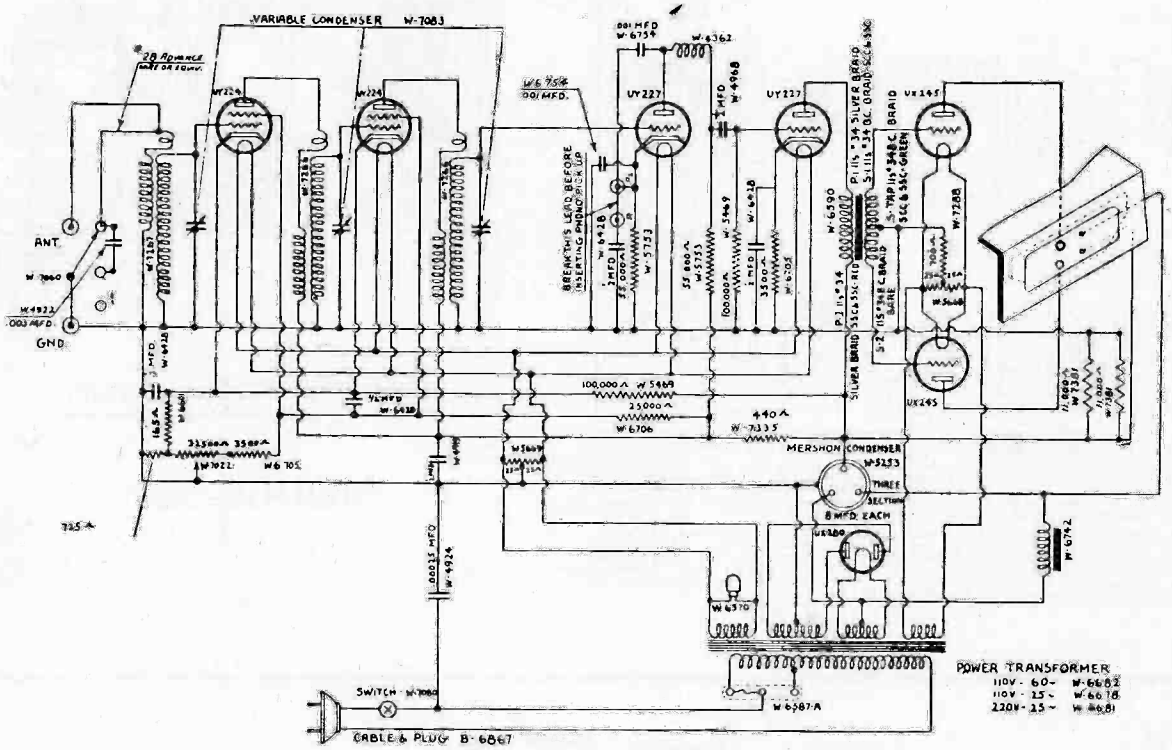

Crosley Corp., Cincinnati, Ohio

Models 40S, 41S, 42S, 82S

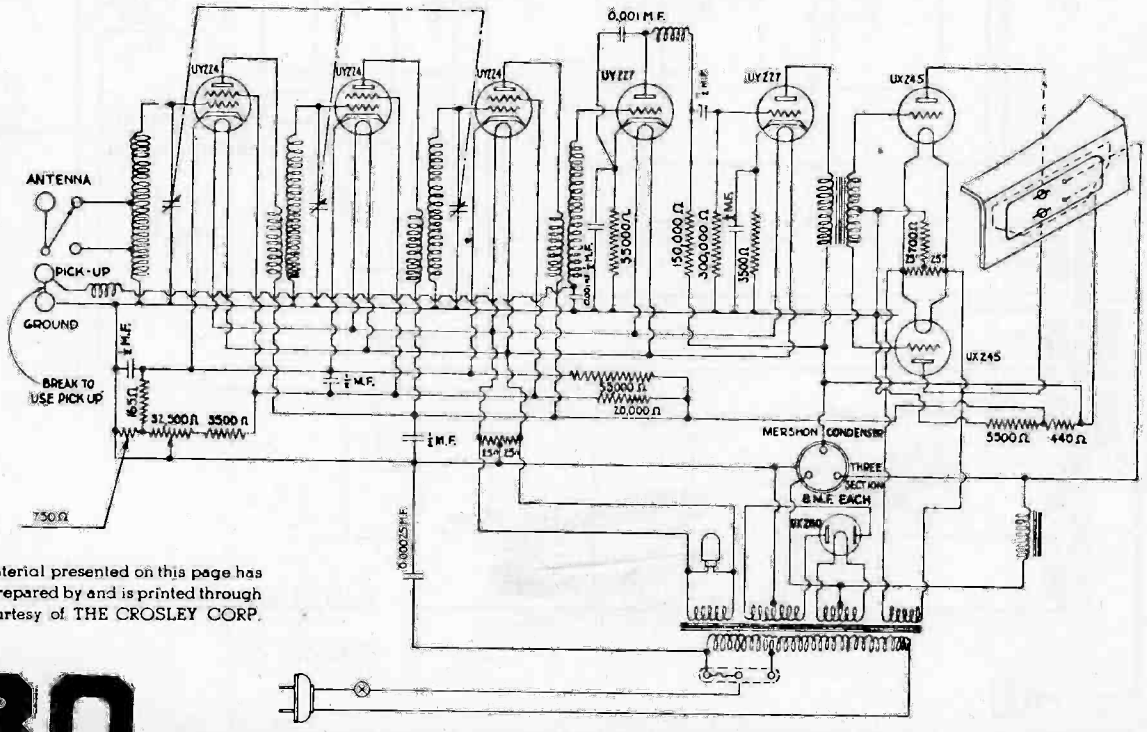

The material presented on this page has been prepared by and is printed through the courtesy of THE CROSLEY CORP.

COMPILED BY M. N. BEITMAN, SUPREME PUBLICATIONS

Wiring Diagram For Model 5B3

The Crosley Corp.

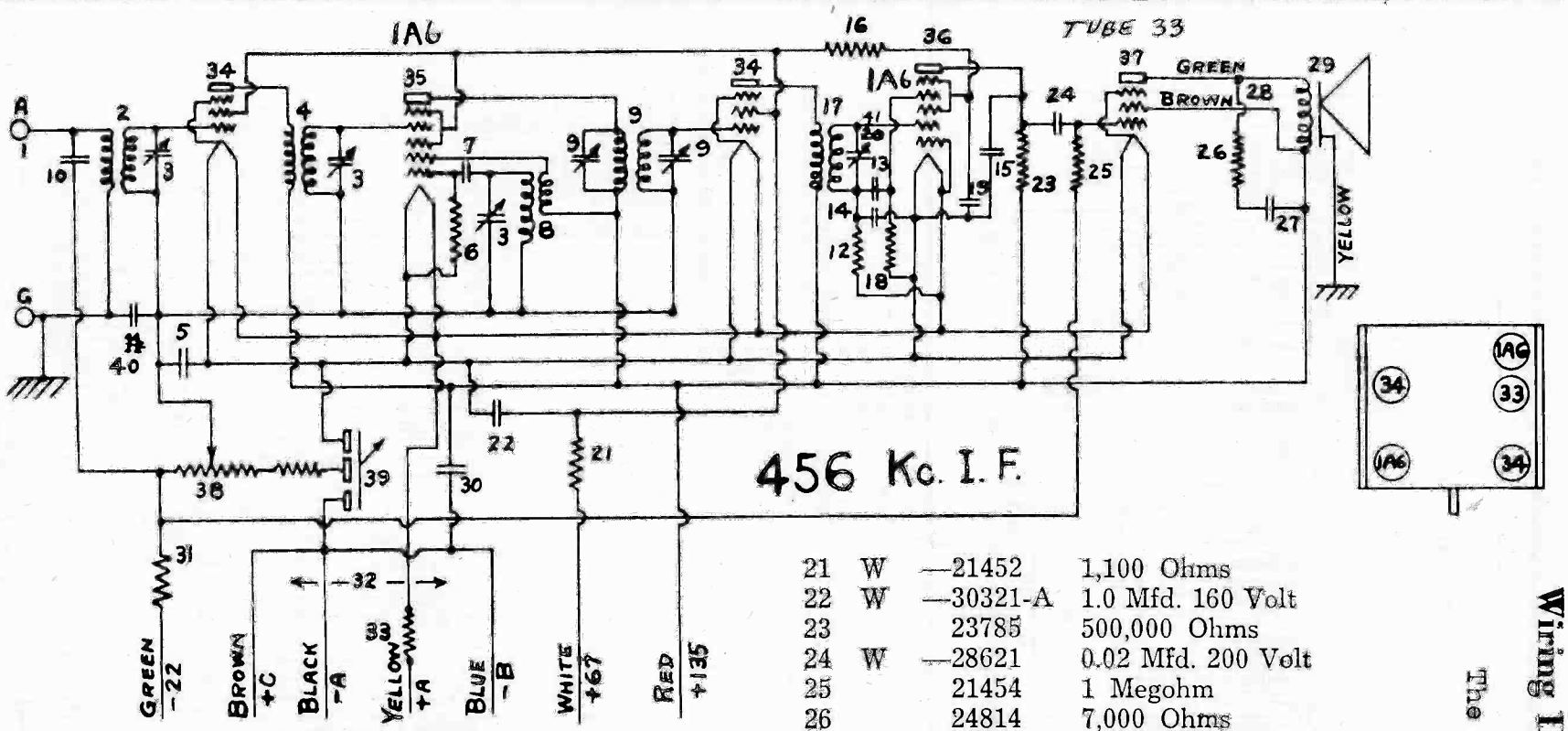

4	G17	—32001	R. F. Transformer
5	W	—24049-B	0.1 Mfd. 200 Volt
6		21875	100,000 Ohms
7	G1	—34004	.025 Mfd. (Mica)
8	G9	—32002	Oscillator Coil
9	G9	—32004	1st I. F. Trans.
10	W	—28621	.02 Mfd. 200 Volt
12		23785	500,000 Ohms
13	W	—28621	.02 Mfd. 200 Volt
14	W	—26152-A	.00015 Mfd. 400 Volt
15			.0001 Mfd. 400 Volt
16		21237-A	60,000 Ohms
17	G13	—32004	2nd I. F. Trans.
18		21454	1 Megohm
19	W	—24049-B	0.1 Mfd. 200 Volt
21	W	—21452	1,100 Ohms
22	W	—30321-A	1.0 Mfd. 160 Volt
23		23785	500,000 Ohms
24	W	—28621	0.02 Mfd. 200 Volt
25		21454	1 Megohm
26		24814	7,000 Ohms
27	W	—28619	.006 Mfd.
28	W	—27933	Speaker Cable
29		30418	336-3B Speaker
30	W	—29910-A	0.25 Mfd. 200 Volt
31		27121	5,000 Ohms
32	G2	—29237	Battery Cable
33	G2	—23300	Air Cell Resistor .53 Ohms
34	G31	—27975	34 Socket
35	G55	—27975	1A6 Socket
36	G4	—33070	1A6 Flex. Socket
37	G36	—27975	33 Socket
38	W	—32649	Volume Cont. 10,000 Ohms
39			Switch 3. P. S. T.
40	W	—24049-B	0.1 Mfd. 200 Volt

Figures in first column correspond to figures in diagram

1	G15-24995	ANTENNA COIL
2	G20-24996	OSCILLATOR COIL
3	D-28592E	GANG CONDENSER
4	G1-23444	1st I.F. TRANS.
5	G8-25948	1st I.F. TUNING COND.
6		I.F. SEC. TUNING COND.
7	G9-25445	2ND I.F. TRANS.
8	G9-25948	2ND I.F. TUNING COND.
9	26577	3 MEG.
10	28888	2700 Ω
11	W-22589	350 Ω
12	W-22512	750 Ω
13	W-24509	680 Ω
14	D-27888A	CORD & PLUG
15	G1-28859	POWER SUPPLY FIL. CHOKE
16	W-29264A	16 MFD. 125V. D.C.
17		16 MFD. 100V. D.C.
18		8 MFD. 10V. D.C.
19	G39-28807	78 SOCKET
20	G49-28807	6F7 SOCKET
21	G15-28807	34 SOCKET
22	G50-28807	12Z3 SOCKET
23	W-28594A	VOLUME CONTROL
24		S.P.S.T. SWITCH
25	D-28620	0.003 MFD. 200V.
26	W-28623	0.02 MFD. 200V.
27		0.02 MFD. 200V.
28	W-29271	0.02 MFD. 400V.
29		0.02 MFD. 400V.
30	W-29265	0.008 MFD. 200V.
31		0.05 MFD. 200V.
32	W29266A	0.03 MFD. 400V.
33		0.02 MFD. 400V.
34	26578	3 MEG.
35	29314	3½-in. SPEAKER
36	W-28559A	D.P.S.T. SWITCH
37	22193A	28,000 Ω
38	W-4099A	6.3V. DIAL LIGHT
39	W-23997A	244 Ω
40		26.7 Ω
41		
42		
43		
44		
45		

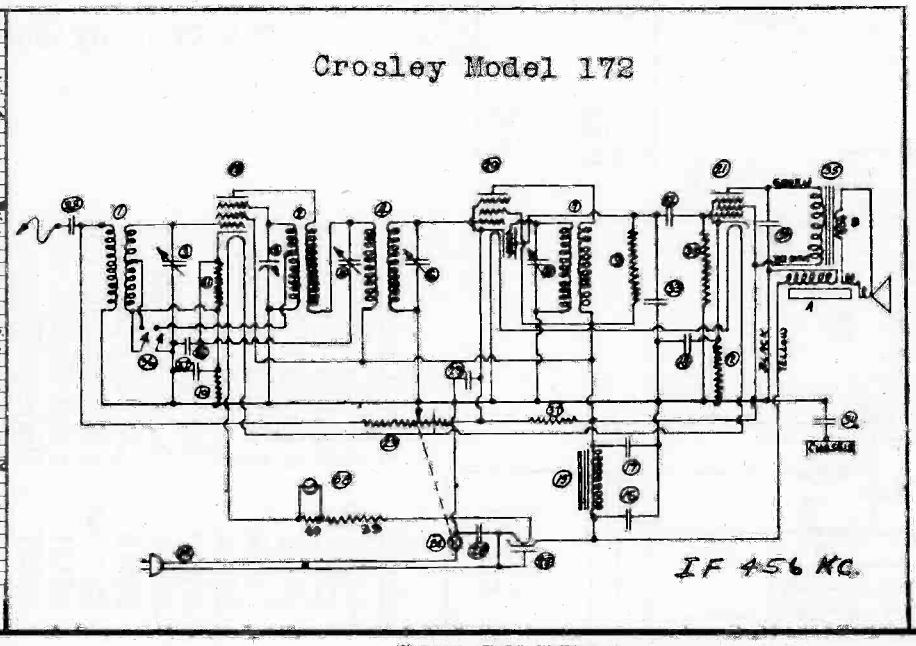

Control Grid Voltages

Pentode ..0.5 to 1.5
I. F. .....1.5 to 2.5 (20-30 vol. cont. off)
1st Det. ..5.5 to 7.5
2nd Det. ..4.0 to 6.0

Filament Voltages

All tubes but rectifier .....2.3 to 2.5
Rectifier tube .....4.6 to 5.0

Screen Grid Voltages

Pentode ..200 to 230
I. F. ..... 75 to 95
1st Det. .. 75 to 95
2nd Det. 15 to 25 (250V scale), 3-8 (50V scale)

Plate Voltages

Pentode 200 to 230
I. F. .....200 to 230
1st Det. ..160 to 180
2nd Det. 75 to 90 (250V scale), 20-30 (50V scale)

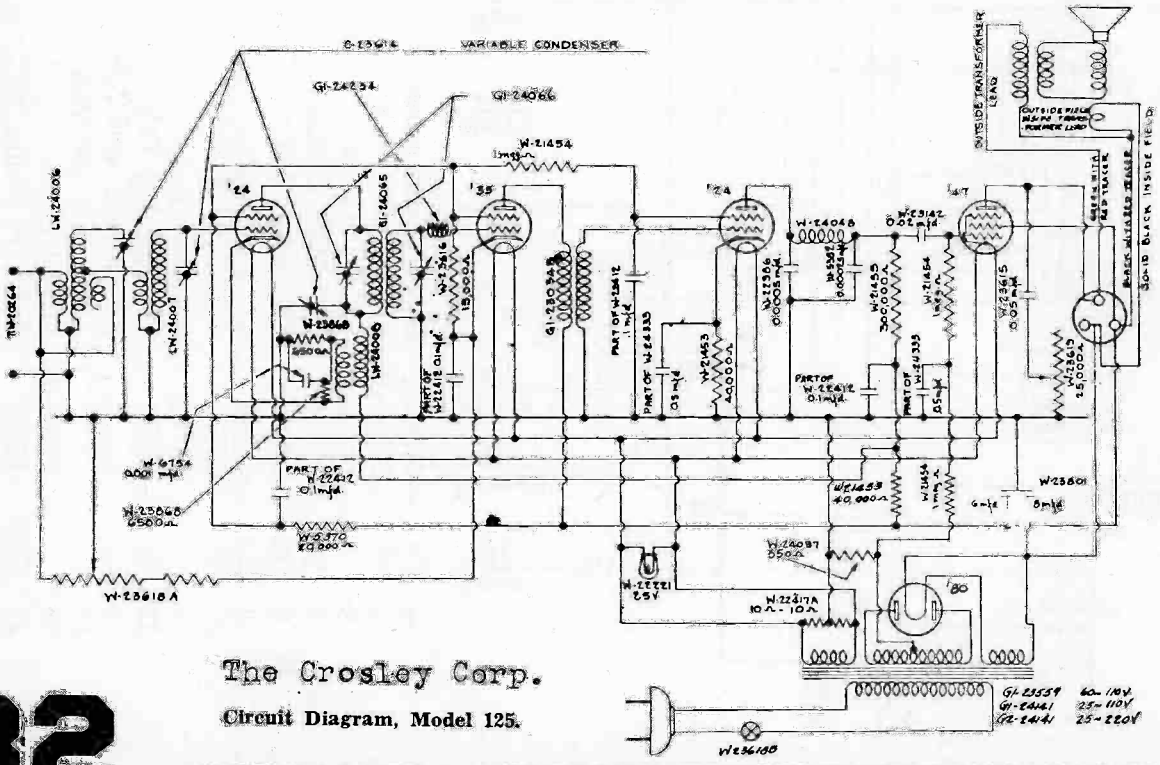

The Crosley Corp.

Circuit Diagram, Model 125.

MODEL 48

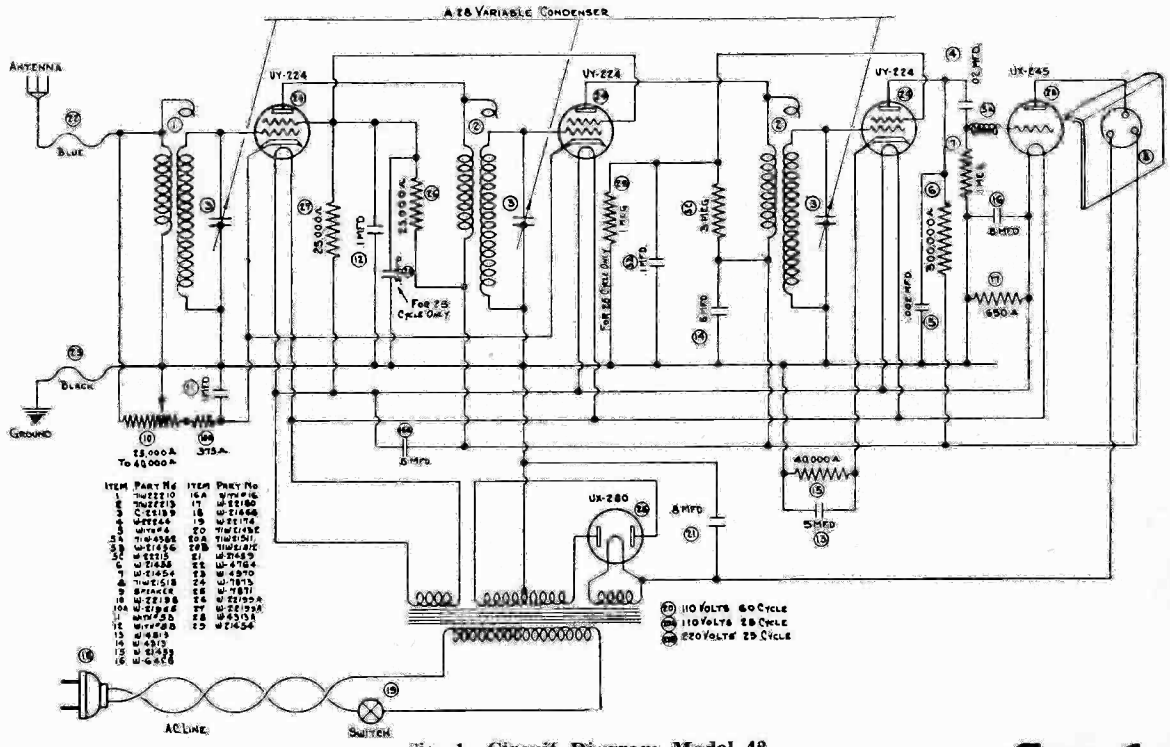

Fig. 1—Circuit Diagram Model 48

Crosley

Models 53, 54 and 57

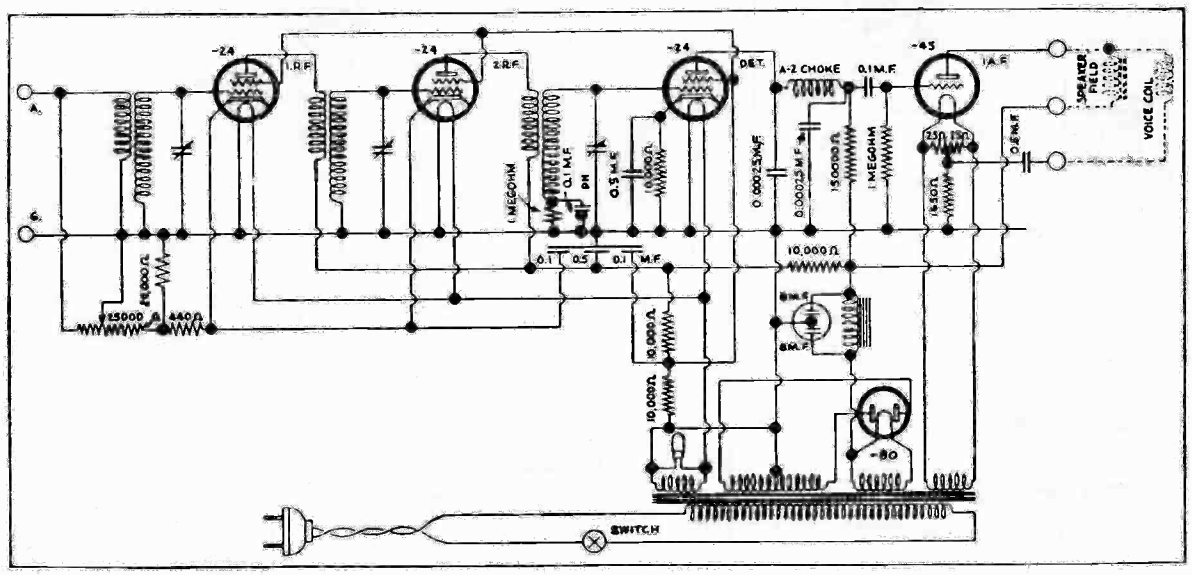

The material presented on this page has been prepared by and is printed through the courtesy of THE CROSLEY CORP.

MANUAL OF MOST-OFTEN-NEEDED RADIO DIAGRAMS

Figures in first column refer to parts in Diagrams.

Item No.	Part No.	Description
1	W —29784B	Antenna—Flexible
2A	W — 4099B	Dial Light
2B	W — 4099B	Dial Light
	G6 —27134	Dial Light Socket Assembly
3	G4 —28859	Filter Choke
4	G106—32000	Ant. Coil
5	G104—32004	1st I-F Coil
6	G103—32004	2nd I-F Coil
7	G94 —32002	Osc. Coil
8Z, 8Y, 8X	W —29804A	Condenser, 8 Mfd. 125 V. / 16 Mfd. 125 V. / 25 Mfd. 100 V.
9	G1 —34002	Condenser, .00025 Mfd. (Molded)
10	W —28620	Condenser, .003 Mfd. 200 V.
11	W —23191A	Condenser, .01 Mfd. 400 V.
12A	W —36541	Condenser, .02 Mfd. 160 V.
12B	W —36541	Condenser, .02 Mfd. 160 V.
12C	W —36541	Condenser, .02 Mfd. 160 V.
12D	W —36541	Condenser, .02 Mfd. 160 V.
13	W —32780B	Condenser, .05 Mfd. 400 V.
14	W —24049C	Condenser, 1 Mfd. 160 V.
16	W —37075	Condenser, 2 Section Trimmer
17	W —40998	Condenser, 1 Section Trimmer
18	G22 —33001	2 Section Var. Tuning Condenser
	C —40926	Dial Glass—536 only
	W —40632B	Pointer Disc—536 only
	W —41014A	Dial Glass Bracket R-H—536 only
	W —41013A	Dial Glass Bracket L-H—536 only
	W —41227	Drive Chain—536 only
	W —40633B	Bearing Support—536 only
	W —41112A	Driven Sprocket—536 only
	W —41113A	Driver Sprocket
	W —40486	Pointer Disc Mtg. Screw
	C —40927	Dial Glass—5536 only
	B —40818B	Pointer Disc—5536 only
	W —41158	Support Bracket L-H—5536 only
	W —41143	Support Bracket R-H—5536 only
	W —40797	Dial Glass Bracket—5536 only

Item No.	Part No.	Description
	W —41162	Drive Chain—5536 only
	W —41160	Bearing Bracket—5536 only
	W —41159A	Shaft—5536 only
	W —40909	Spring Washer—5536 only
	W —31840A	Snap Ring—5536 only
19	B —40999	Power Cord & Plug
20	—36316	Resistor, 2700 Ohm ¼W.
21	— 4921C	Resistor, 10,000 Ohm 1W.
22	—35928	Resistor, 60,000 Ohm ¼W.
23A	—35600	Resistor, 100,000 Ohm ¼W.
23B	—35600	Resistor, 100,000 Ohm ¼W.
24	—35601	Resistor, 300,000 Ohm ¼W.
25	—36322	Resistor, 500,000 Ohm ¼W.
26	—35927	Resistor, 2 Megohm ¼W.
27	—33490	Resistor, 10 Megohm ¼W.
28	W —28589	Resistor, 350 Ohm ½W. Flex.
29	W —41000	Candohm—2 Sections
30A	G151—36400	Socket Type 6K7
30B	G151—36400	Socket Type 6K7
31	G157—36400	Socket Type 6J7
32	G161—36400	Socket Type 25A6
33	G162—36400	Socket Type 25Z6
	W —40911	Tube Shield
	W —27981A	Tube Shield Base
34	B —41012	Speaker 237BL9
	W —40593	Speaker Mtg. Bracket
	— 6415	Mtg. Bracket Screw
35	—41004	Band Selector Switch
36Z, 36Y	—41002	Volume Control 4800 Ohm Tap 160 Ohm Line Switch
	B —40590	Escutcheon (536 only)
	D — 28	Escutcheon Mtg. Screws (4) (536 only)
	W —41019	Knob (536 only)
	W —40839	Escutcheon (5536 only)
	W —40840	Escutcheon Plate (5536 only)
	W —29760A	Escutcheon Pin (5536 only)
	W —41019	Knob (2) (5536 only)
	W —41021	Knob (1) (5536 only)

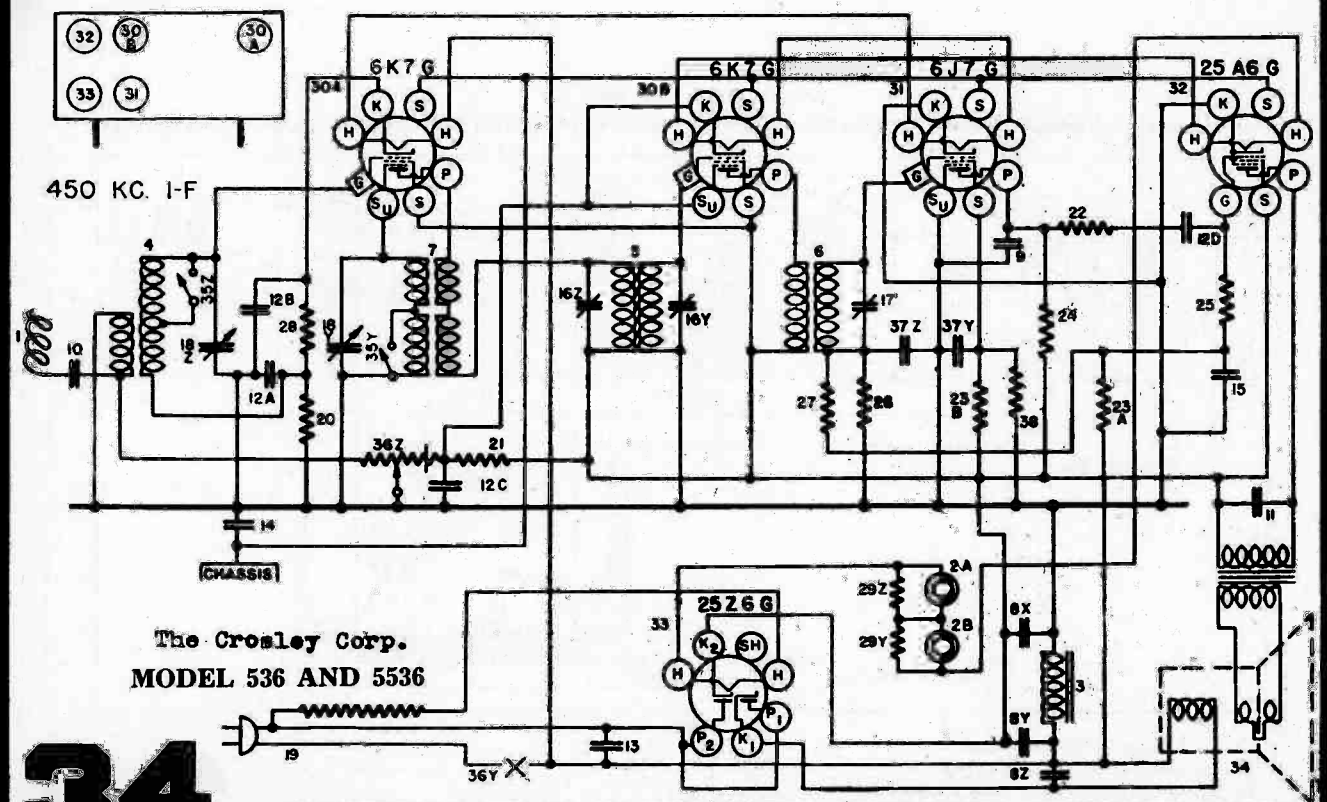

MANUAL OF MOST-OFTEN-NEEDED RADIO DIAGRAMS

PARTS LIST—MODEL 6H2

* Figures in 2nd last column refer to parts shown in wiring diagram of Model 6H2

Qty.	Part No.	Description	* Item
1	G3-32000	Antenna Coil (Low Freq.)	2
1	G1-32002	Antenna Coil (High Freq.)	3
1	G2-32001	R. F. Trans. Coil (L. F.)	4
1	G1-32001	R. F. Trans. Coil (H. F.)	5
1	G2-32002	Oscillator Coil (L. F.)	6
1	G1-32002	Osc. Coil (H. F.)	7
1	G9-32004	1st I. F. Trans. (With Trimmers	8-18 19
1	G10-32004	2nd I. F. Trans. (With Trimmers	9-20 21
6	W25200	Coil Shield Socket	
3	W30802	Coil Shield	
2	W25025A	Coil Shield	
1	W25025A	Coil Shield	
3	W26891	Insulating Washer L. F. Ant.-R. F. and Osc.	2-4-6
3	W21541B	Retaining Ring	2-4-6
2	W30026	Retaining Ring	3-5-7
1	G1-33008	L. F. & H. F. Antenna Trimmer Cond.	11-12
1	G1-33008	L. F. & H. F. R. F. Trimmer Cond.	13-14
1	G15-33009	L. F. & H. F. Osc. Trimmer Condenser	15-75
1	G2-33007	L. F. & H. F. Osc. Series Trimmer Cond.	16-17
1	G19-33002	Variable Tuning Condenser Gang	10
1	G5-32086	Dial Drive Assm.	
1	W32208A	Dial Hand	
2	W32293	Dial Hand Nut	
1	G75-27456	6D6 Socket	61
1	G47-27456	6A7 Socket	62
1	G48-27456	6B7 Socket	63
1	G80-27456	76 Socket	64
1	G25-27456	42 Socket	65
1	G6-27456	80 Socket	66
3	W26010	Tube Shield Base	
2	W27328A	Tube Shield (6A7, 6B7)	
1	B26009C	Tube Shield (6D6)	
1	G6-30745	Power Transformer 60 cy. 110 V.	71
	G7-30745	Power Transformer 25 cy. 110 V.	72
	G8-30745	Power Transformer 25 cy. 220 V.	73
1	B32285	Band Change Switch	74

Qty.	Part No.	Description	* Item
1	B30375A	Cable & Plug	67
1	W28552	Level Control (Volume) (3 Megohms)	58
2	G4-27134	Dial Light Brkt Assm.	
1	W25594B	Tone Control (80000 Ohm) & Line Switch	59-60
1	G16-26719	Ant.-Gnd. Terminal	1
		FILTER & BY-PASS CONDENSERS	
1	W29097C	8.-8.-8. Mfd. 450 V.-450 V.-250 V.	37-38 39
1	W26194B	12. Mfd. 475 V.	36
1	W30321	1. Mfd. 160 V.	32
3	W32379	0.02 Mfd. 200 V.	22-23 25
1	W32304	0.0014 Mfd.	24
1	W30322A	0.00017-0.006 Mfd. 200 V.-200 V.	26-27
1	W25537A	0.001-0.03 Mfd. 400 V.-400 V.	28-29
1	W30805	0.01 Mfd. 400 V.	30
1	W32378	0.01 Mfd. 400 V.	31
1	W24784	0.25 Mfd. 200 V.	33
1	W25517	0.008-0.05 Mfd. 400 V.-400 V.	34-35
1	W27540	0.0005 Mfd. 400 V.	40
		RESISTORS	
1	W28589	350 Ohms (Flexible)	41
1	21453	40000 Ohms	42
4	23785	500000 Ohms	43-48 50-53
2	26577	3 Megohms	44-46
1	W27504	100 Ohms (Flexible)	45
1	21454	1 Megohm	47
1	23403	150000 Ohms	49
1	21876	10000 Ohms	51
1	24814	7000 Ohms	52
1	33474	120000 Ohms	54
1	W31883	8500-25000 Ohms	56-57
3	W32352	Knob	
1	W32353	Knob	
1	W31007A	Speaker Cord (4 Lead)	
1	W32219A	Dial Glass	
1	W32220A	Dial Glass Retainer	
1	B32190C	Escutcheon	
1	W33106A	Escutcheon Gasket	
4	D28	Escutcheon Screws (.10 doz)	

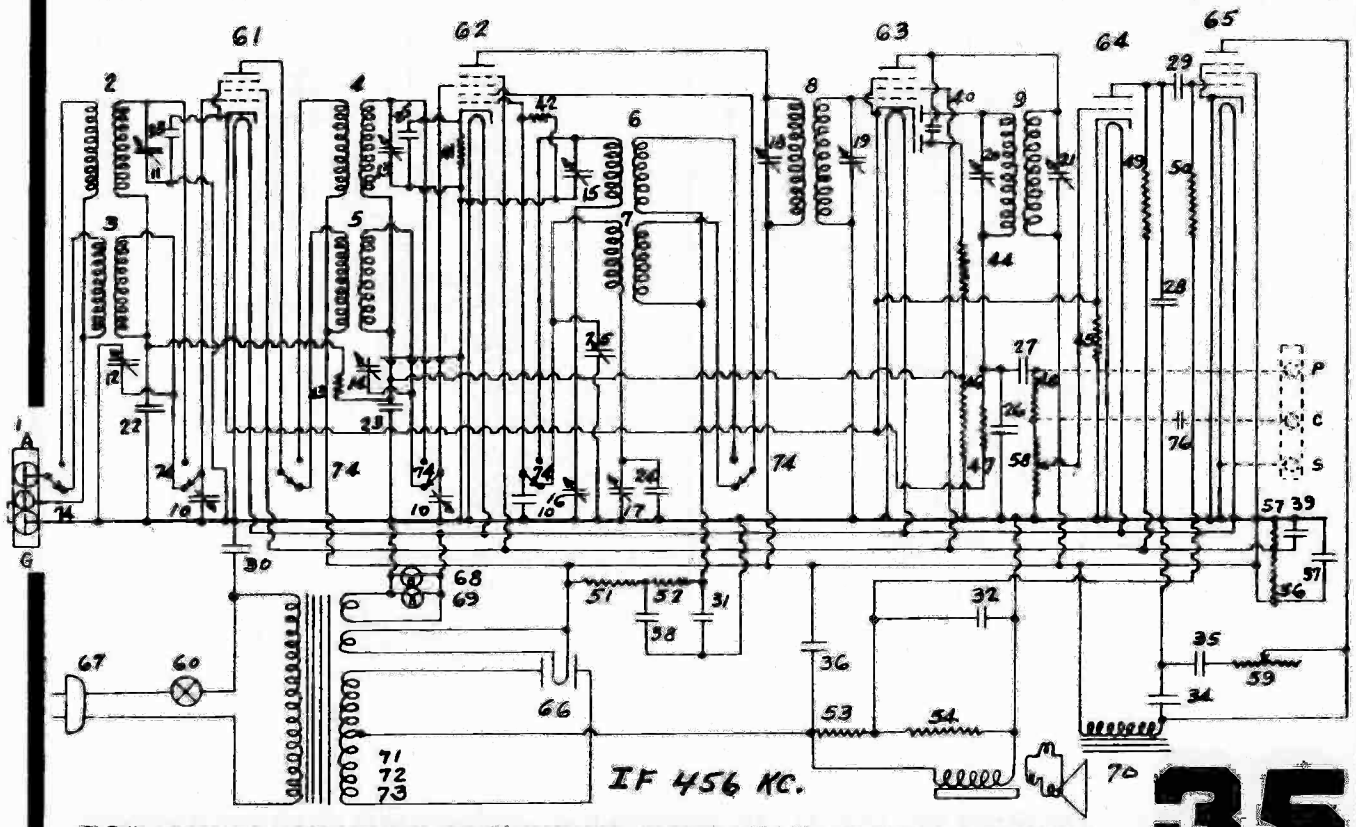

Crosley Radio Corporation

Model 124

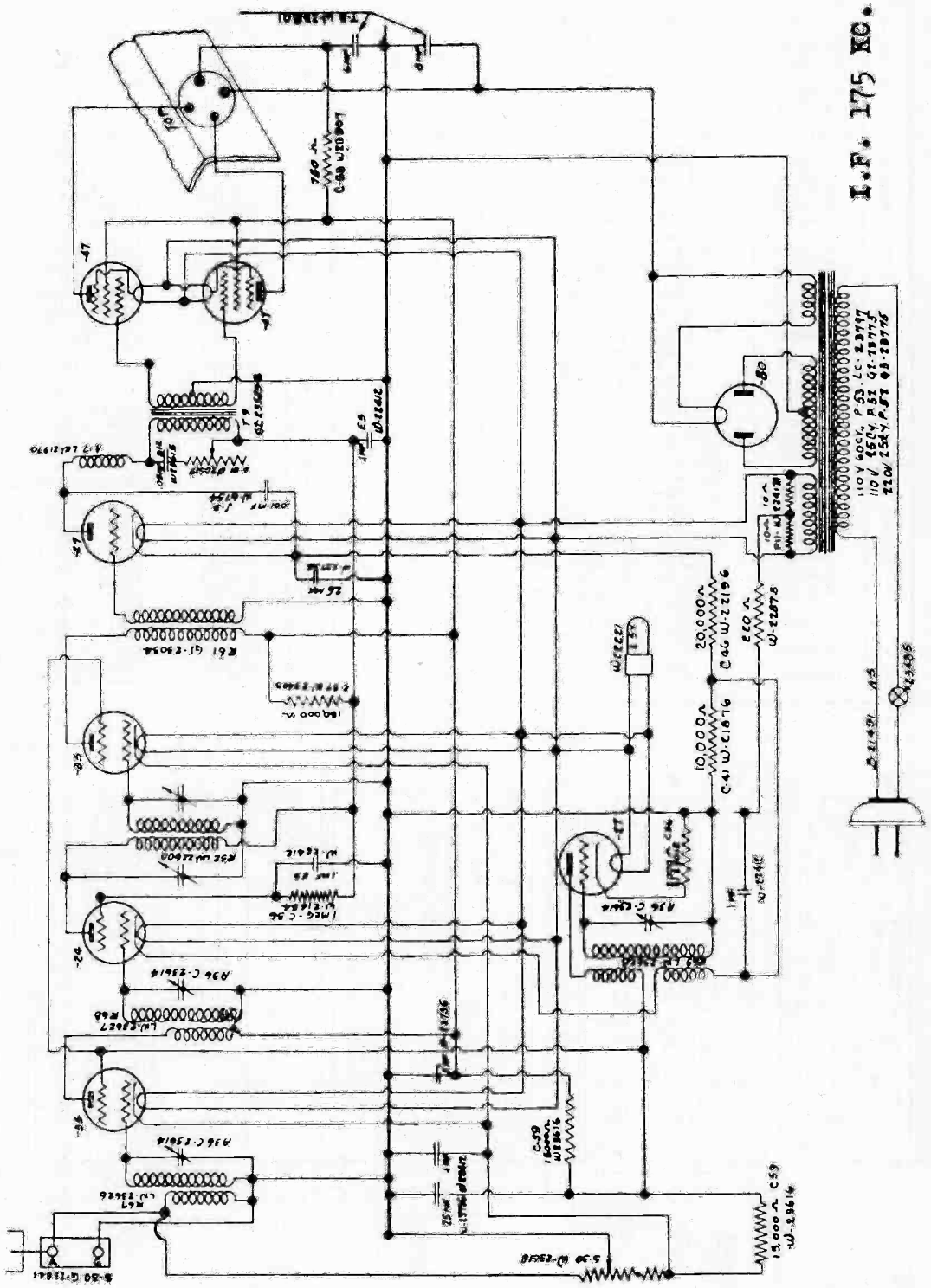

Crosley Model 147

1	W-27652	.003 MFD.
2	LW-27680	ANTENNA COIL
3	LW-27681	INTERSTAGE COIL
4	B-27706	TUNING CONDENSER
5	W-27694	VOLUME CONT. 4500Ω
6		LINE SWITCH
7	W-25438	.1 MFD.
8		.1 MFD.
9	W-27677A	8 MFD.
10		8 MFD.
11	W-21237A	60,000Ω
12	W-26577	3 MEG.
13	W-27203	.02 MFD.
14	W-26578	5 MEG.
15	W-26690	4500Ω
16	~~W-25438~~	~~.003 MFD.~~
17	W-27675	300Ω RED DEAL
18	~~W-27684~~	~~10 MFD.~~
19	G2-24774	FILTER CHOKE
20	W-27676	4 MFD.
21		4 MFD.
22	LW-27815	CORD & PLUG
23	.....	~~P-30 SOCKET~~
24	G11-27727	-36 SOCKET
25	G15-27727	-38 SOCKET
26	G17-27727	-39 SOCKET
27	27790	340 SPEAKER
28	W-26072	ANTENNA LEAD
29	W-4639C	2 AMP. FUSE
30	W-27652	.003 MFD.
31	W-28100	300Ω CARDOHM
32	G12-27727	- 37 SOCKET
33	W-27652	.003 MFD.
34	G1-24234	FILTER CHOKE

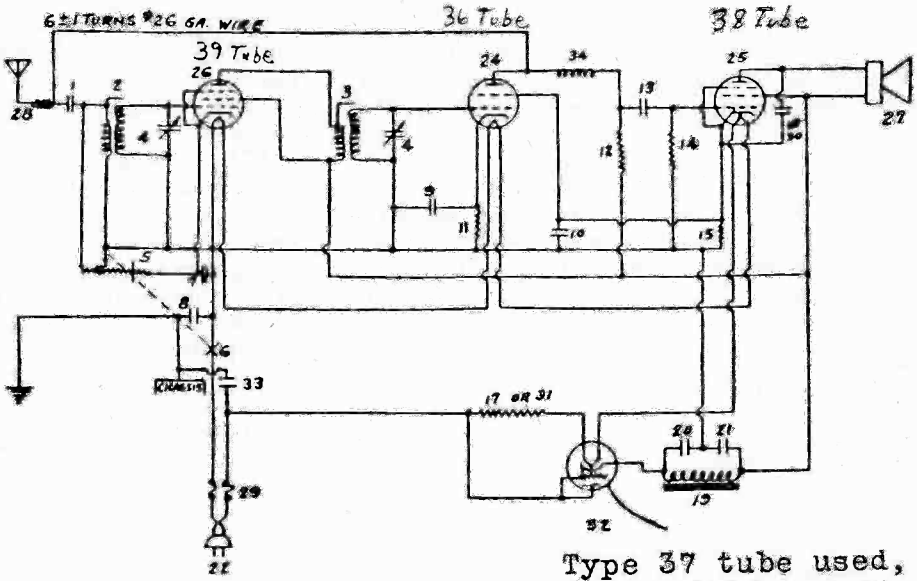

Type 37 tube used, Early models used type KR tube.

Crosley Model 148

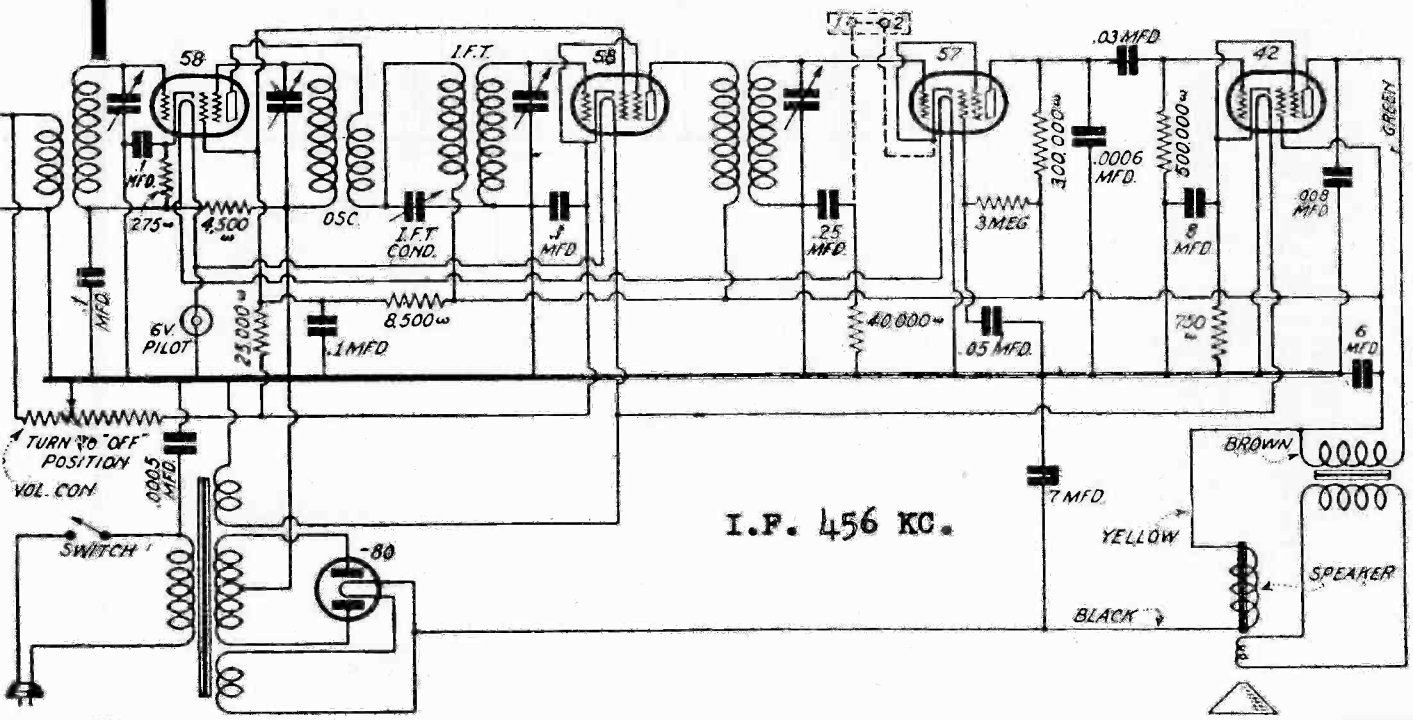

The Crosley Radio Corporation, Cincinnati, Ohio

Model 158

Specifications

Model 158 is a seven tube superheterodyne designed for operation from A. C. electric circuits. The intermediate frequency used is 181.5 KC.

Tubes And Voltage Limits

The following are the voltages measured with the receiver in operating condition, but with no signal to the antenna circuit. Use a high resistance D. C. Voltmeter (1000 ohms per volt, or more) for all but filament voltages. In measuring filament or heater voltages use a low range A. C. meter. The voltage limits are + or — 10% of values given in the following table.

Line voltage—117.5 (235 for 220 volt receivers).

Plate voltage measured from plate contact to cathode contact.

Screen grid voltage measured from screen grid contact to cathode contact.

Suppressor grid voltage measured from suppressor grid contact to cathode contact.

Bias voltage measured from cathode contact to chassis.

Tube	Position	Voltages Plate	Screen Grid	Supp. Grid	Bias	Fil.
-58	R. F. Amplifier	270	85	0	0	2.5
-57	Oscillating Detector	270	80	0	6.0	2.5
-58	I. F. Amplifier	275	80	0	4.0	2.5
-56	Detector	0				2.5
-56	A. F. Amplifier	40			1.6	2.5
-42	Output	245	250		22.0	6.3
-80	Rectifier	350				4.8

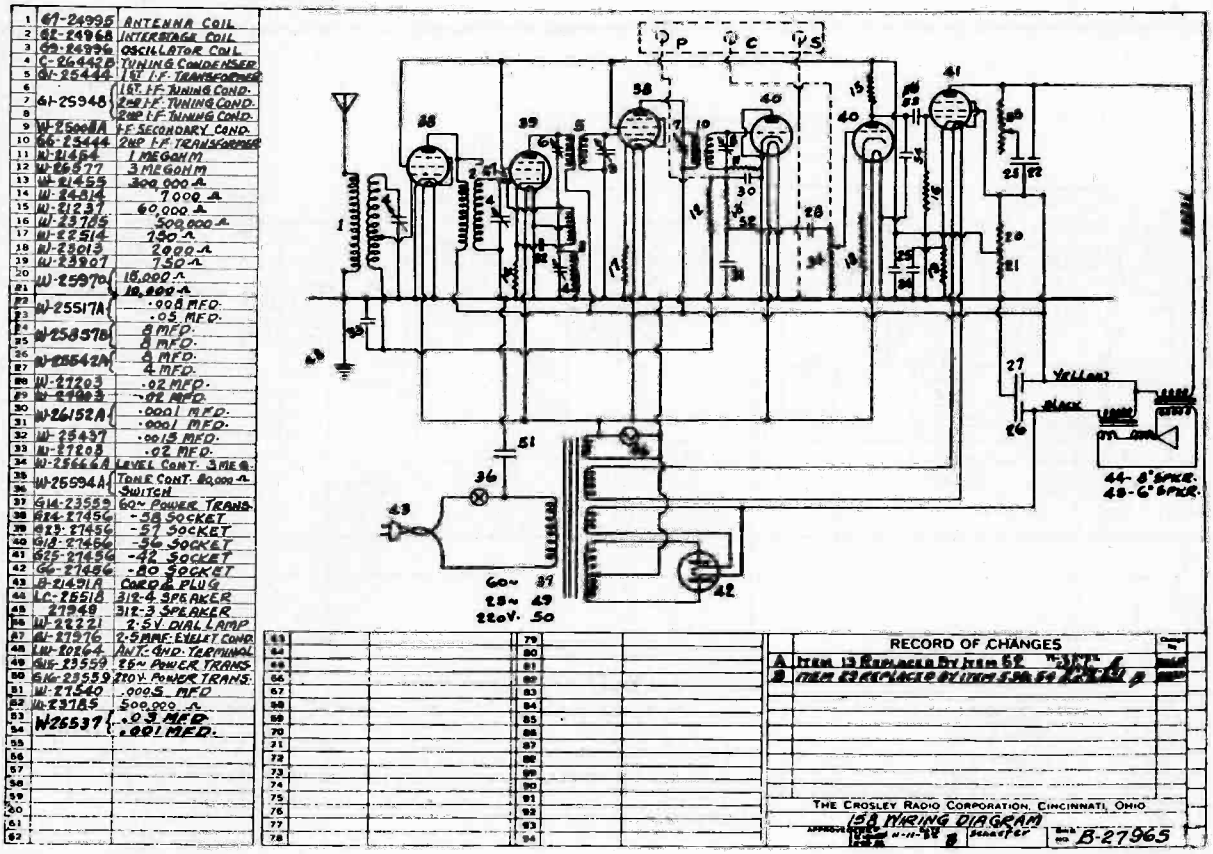

MANUAL OF MOST-OFTEN-NEEDED RADIO DIAGRAMS

Model 160

The Crosley Radio Corporation

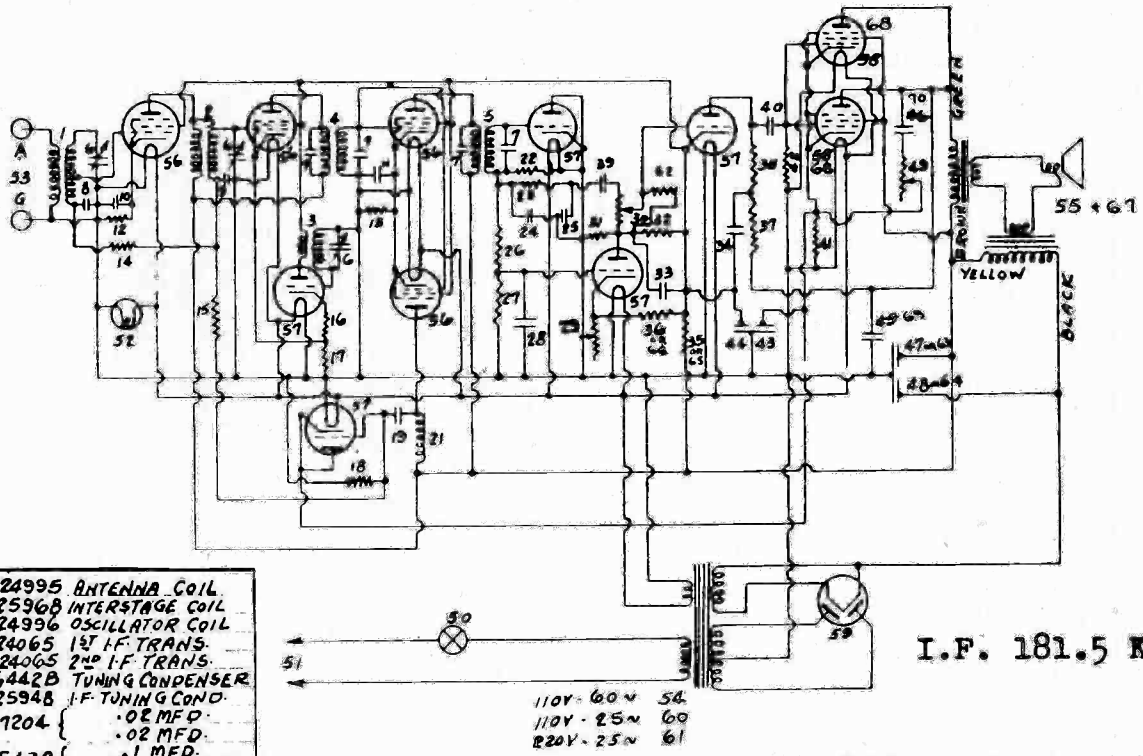

I.F. 181.5 KC.

1	G7-24995	ANTENNA COIL
2	G2-25968	INTERSTAGE COIL
3	G14-24996	OSCILLATOR COIL
4	G5-24065	1ST I.F. TRANS.
5	G10-24065	2ND I.F. TRANS.
6	C-26442B	TUNING CONDENSER
7	G3-25948	I.F. TUNING COND.
8	W-27204	.02 MFD.
9		.02 MFD.
10	W-25438	.1 MFD.
11		.1 MFD.
12	W-25937	275 Ω
13	W-21964	165 Ω
14	W-23785	500,000 Ω
15	W-21454	1 MEGOHM
16	W-23013	2000 Ω
17	W-22514	750 Ω
18	W-21455	300,000 Ω
19	W-27540	.0005 MFD.
20		
21	G3-25445	COUPLING CHOKE
22	W-21454	1-MEGOHM
23	W-23785	500,000 Ω
24	W-26152	.00015 MFD.
25		.0001 MFD.
26	W-26578	5-MEGOHM
27	W-26577	3-MEGOHM
28	W-27203	.02 MFD.
29	W-28287A	LEVEL CONT. 5000 Ω
30	W-25666	AUDIO LEVEL CONT. 3-MEG
31	W-26577	3-MEGOHM
32	W-23403	150,000 Ω
33	W-25516	.25 MFD.
34		.25 MFD.
35	W-27120	8500 Ω
36		25,000 Ω
37	W-21237	60,000 Ω
38	W-21875	100,000 Ω
39	W-23142	.02 MFD.
40	W-23615	.05 MFD.
41	W-22873	220 Ω
42	W-21455	300,000 Ω
43	W-25857A	8 MFD. 25 V
44		8 MFD. 200 V
47	W-28340	8 MFD. 350 V
48		12 MFD. 475 V
49	W-25594A	TONE CONT. 80,000 Ω
50		LINE SWITCH
51	B-21491A	CABLE & PLUG
52	W-22221	2.5V. DIAL LAMP
53	W-20264	ANT.-GND. TERMINAL
54	G19-25669	POWER TRANS. 60~
59	27869	337-4M SPEAKER

55	G24-27456	-58 SOCKET
57	G18-27456	-56 SOCKET
59	G6-27456	-80 SOCKET
60	G20-25669	POWER TRANS. 25~
61	G21-25669	POWER TRANS. 220V.
62	W-21454	1-MEGOHM
63	W-28468	8 MFD. 350 V.
64		12 MFD. 475 V.
65	W-28471	8500 Ω
66		25,000 Ω
67	27870	337-5M SPEAKER
68	G43-27456	2A5 SOCKET
69	W-28860	.008 MFD
70		.15 MFD

RECORD OF CHANGES

			Change No.
A	ITEM 62 ADDED	12-29-32	3309
B	ITEMS 63 AND 64 ADDED	1-6-33	3310
B	ITEMS 65 AND 66 ADDED	1-7-33	3311
C	ITEM 58 REPLACED BY ITEM 68	1-18-33	3312
D	ITEMS 45 & 46 REPLACED WITH ITEMS 69 & 70	1-18-33	3362

The material presented on this page has been prepared by and is printed through the courtesy of THE CROSLEY CORP.

THE CROSLEY RADIO CORPORATION, CINCINNATI, OHIO

160 WIRING DIAGRAM

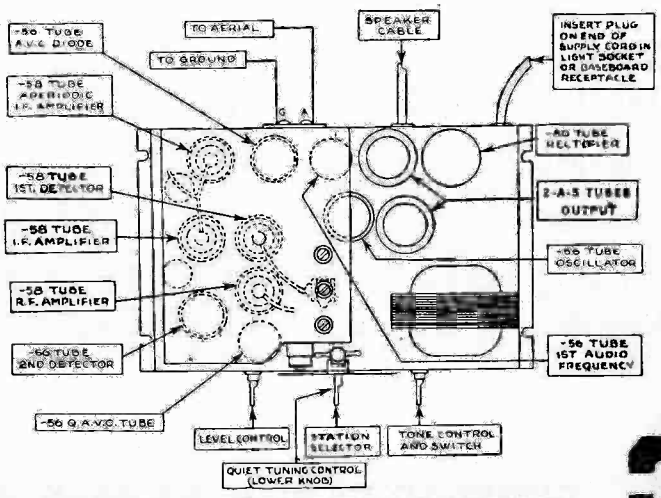

COMPILED BY M. N. BEITMAN, SUPREME PUBLICATIONS

Model 167

1	G20-24995	ANTENNA COIL
2	G17-24996	OSCILLATOR COIL
3	L-27426	VARIABLE CONDENSER
4	G7-25444	1ST I.F. TRANS.
5	G2-25948	1ST I.F. TRANS. PRI. TUN. COND.
6	W-25008A	1ST I.F. SEC. TUN. COND.
7	W-27548	2ND I.F. TRANS. SEC. TUN. COND.
8	G7-25445	2ND I.F. TRANS.
9	W-25537A	0.0006 µf 400V.
10		0.03 µf 400V.
11	W-21455	300,000 Ω
12	W-23785	500,000 Ω
13	27610	33S-3 SPEAKER
14	LW-20264	ANT-GND. TERM.
15	W-26573B	VOLUME CONTROL
16		LINE SWITCH
17	W-25438	0.1 µf 200V.
18		0.1 µf 200V.
19	W-25438	0.1 µf 200V.
20		0.1 µf 200V.
21	W-25937	275 Ω
22		
23		
24		
25	W-24784	0.25 µf 200V.
26	~~W-25537A~~	~~0.03 µf~~
27		~~0.0006 µf~~
28	W-21453	40,000 Ω
29	W-26577	3 MEG.
30	W-23907	750 Ω
31	W-27488	8 µf 25V.
32		6 µf 800V.
33	W-23701B	7 µf 440V.
34	B-21491A	CORD & PLUG
35	G11-23559	POWER TRANS. (60~)
36	W-4099A	6V. DIAL LIGHT
37	G23-27456	-57 SOCKET
38	G24-27456	-58 SOCKET
39	G25-27456	-42 SOCKET
40	G6-27456	-80 SOCKET
41		
42	W-28913	WAVE CHANGE SWITCH
43	G12-23559	POWER TRANS. (25~)
44	G13-23559	POWER TRANS. (220V.)
45	W-29089	0.02 MFD. 400V.
46		0.016 MFD. 400V.
49	W-29591A	.0005 MFD 400V.
50	W-27120	28,000 Ω
51		8,500 Ω
52	30137	3,600 Ω
53		
54		
55		
56		
57		
58		
59		
60		
61		
62		

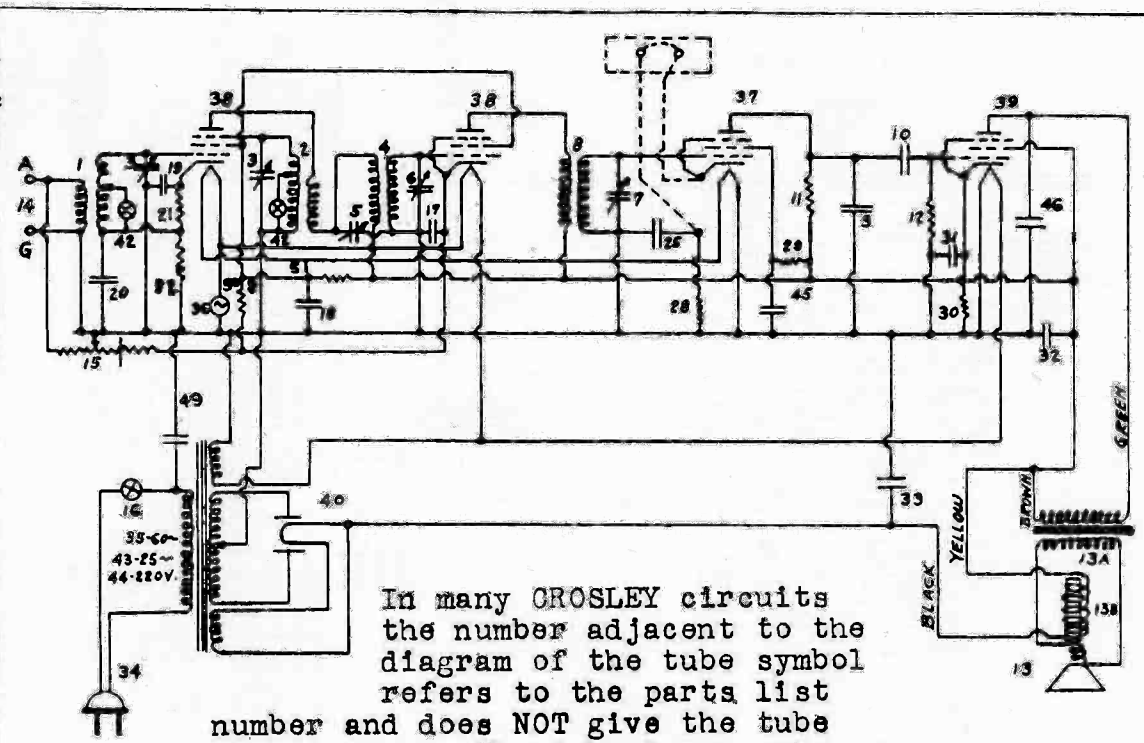

In many CROSLEY circuits the number adjacent to the diagram of the tube symbol refers to the parts list number and does NOT give the tube type number. The tube type number is given in the parts list in such cases.

I.F. 456 KC.

63				79			
64				80			
65				81			
66				82			
67				83			
68				84			
69				85			
70				86			
71				87			
72				88			
73				89			
74				90			
75				91			
76				92			
77				93			
78				94			

RECORD OF CHANGES

			Change No.
A	ITEMS 26 & 27 REPLACED WITH ITEMS 45 & 46	B	3335
B	ITEMS 15 & 16 WAS W-26573A 4-3-33 R.E.D.	B	[illegible]
B	ITEMS 23 & 24 REPLACED WITH ITEMS 49 & 50 4-25-33 R.E.D.	B	[illegible]
C	ITEM 41 REPLACED BY ITEM 49	[illegible]	[illegible]
D	[illegible]	[illegible]	[illegible]

THE CROSLEY RADIO CORPORATION, CINCINNATI, OHIO

APPROVED 167 WIRING DIAGRAM

DATE Schaefer DWG. NO. B-28932

The Crosley Radio Corporation, Cincinnati, Ohio

Model 168

Specifications

Model 168 is a seven tube dual band superheterodyne designed for operation from A.C. electric circuits. The intermediate frequency is 181.5 Kc.

Tubes and Voltage Limits

The following are the tubes and voltages measured with the receiver in operating condition but with no signal to the antenna circuit. Line voltage should be 117.5 volts (235 volts for 220 volt receivers). All voltages, except filament, are measured from tube contact to chassis with a 500 volt D.C. voltmeter (1000 ohms per volt). Filament voltages are measured with a low range A.C. voltmeter.

Tube	Position	Plate	Screen Grid	Cathode	Suppressor Grid	Filament
56	Oscillator	66		6.5		2.5
58	Modulator	270	122	8.0	8.0	2.5
58	I. F. Amplifier	270	122	8.5	8.5	2.5
58	I. F. Amplifier	270	122	7.0	7.0	2.5
2A6	Detector and A. F. Amplifier	231		2.0		2.5
2A5	Output	257	270	18.0		2.5
80	Rectifier	380				4.9

Voltage limits are plus or minus 10% of values given.

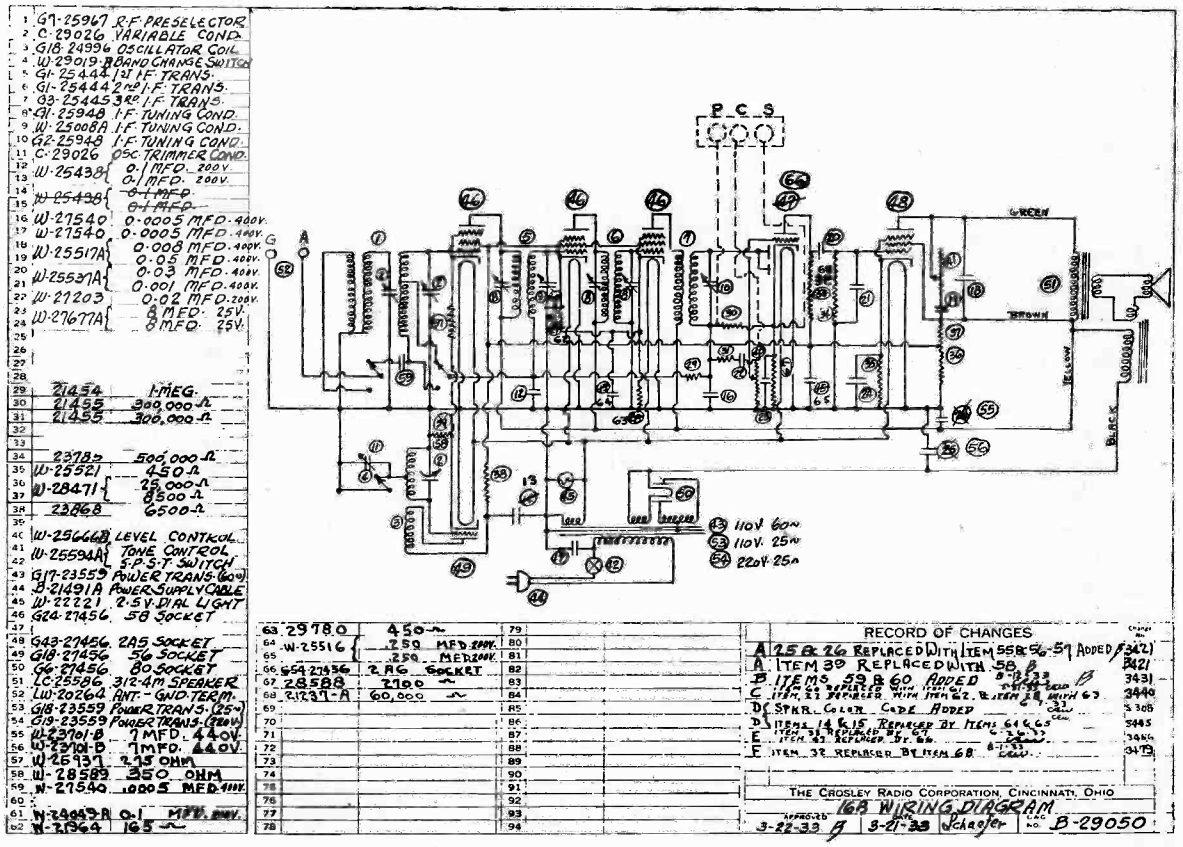

The Crosley Radio Corporation, Cincinnati, Ohio

Model 169

Specifications

Model 169 is a four tube dual band superheterodyne designed for operation from A.C. electric circuits. The intermediate frequency is 456 Kc.

Tubes and Voltage Limits

The following are the tubes and voltages measured with the receiver in operating condition but with no signal to the antenna circuit, with a line voltage of 117.5 volts (235 volts for 220 volt receivers). All voltages, except filament, are measured with a 500 volt D.C. voltmeter (1000 ohms per volt) from tube contact to chassis. Filament voltages are measured with a low range A.C. voltmeter.

Tube	Position	Plate	Screen Grid	Cathode	Suppressor Grid	Filament
58	Oscillator-Modulator	188	88	28	0	2.5
2B7	I. F. Amplifier and Detector	188	88	2		2.5
42	Output	178	188	14.5		2.5
80	Rectifier	322				4.9

Voltage limits are plus or minus 10% of values given.

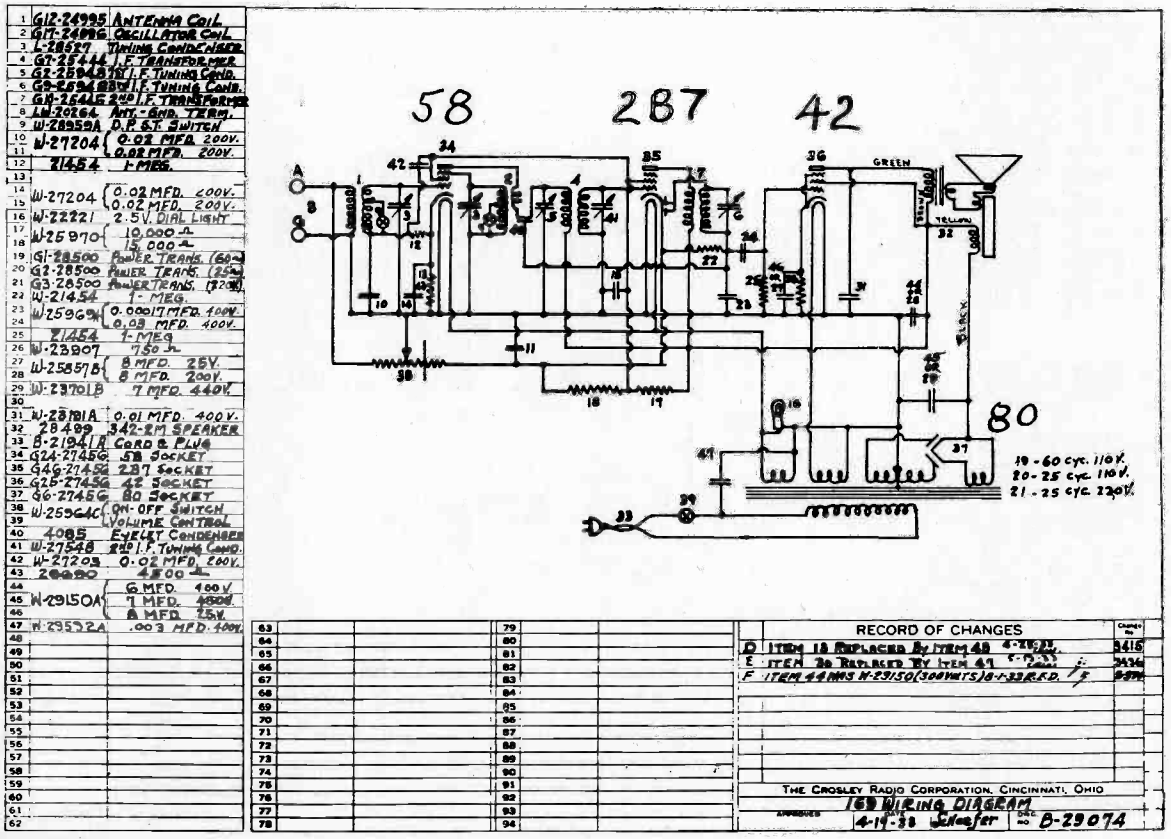

The Crosley Radio Corporation, Cincinnati, Ohio

Model 170

Specifications

Model 170 is a ten tube dual band superheterodyne designed for operation from A.C. electric circuits. The intermediate frequency used is 181.5 Kc.

Tubes and Voltage Limits

The following are the tubes and voltages measured with the receiver in operating condition but with no signal to the antenna circuit, and with a line voltage of 117.5 volts (235 volts for 220 volt receivers). All voltages, except filament, are measured with a 500 volt D.C. voltmeter (1000 ohms per volt) from tube contact to chassis. Filament voltages are measured with a low range A.C. voltmeter.

Tube	Position	Plate	Screen Grid	Cathode	Suppressor Grid	Filament
58	Modulator	276	120	6.0	6.0	2.5
56	Oscillator	50		6.0		2.5
58	I. F. Amplifier	276	120	8.0	8.0	2.5
58	I. F. Amplifier	276	120	8.0	8.0	2.5
56	Detector	0				
56	Phase Shifter	55		0		2.5
56	A. F. Amplifier	56		2.0		2.5
2-2A5	Output	269		3.0		2.5
80	Rectifier	355	276	18.0		2.5
						4.9

Voltage limits are plus or minus 10% of values given.

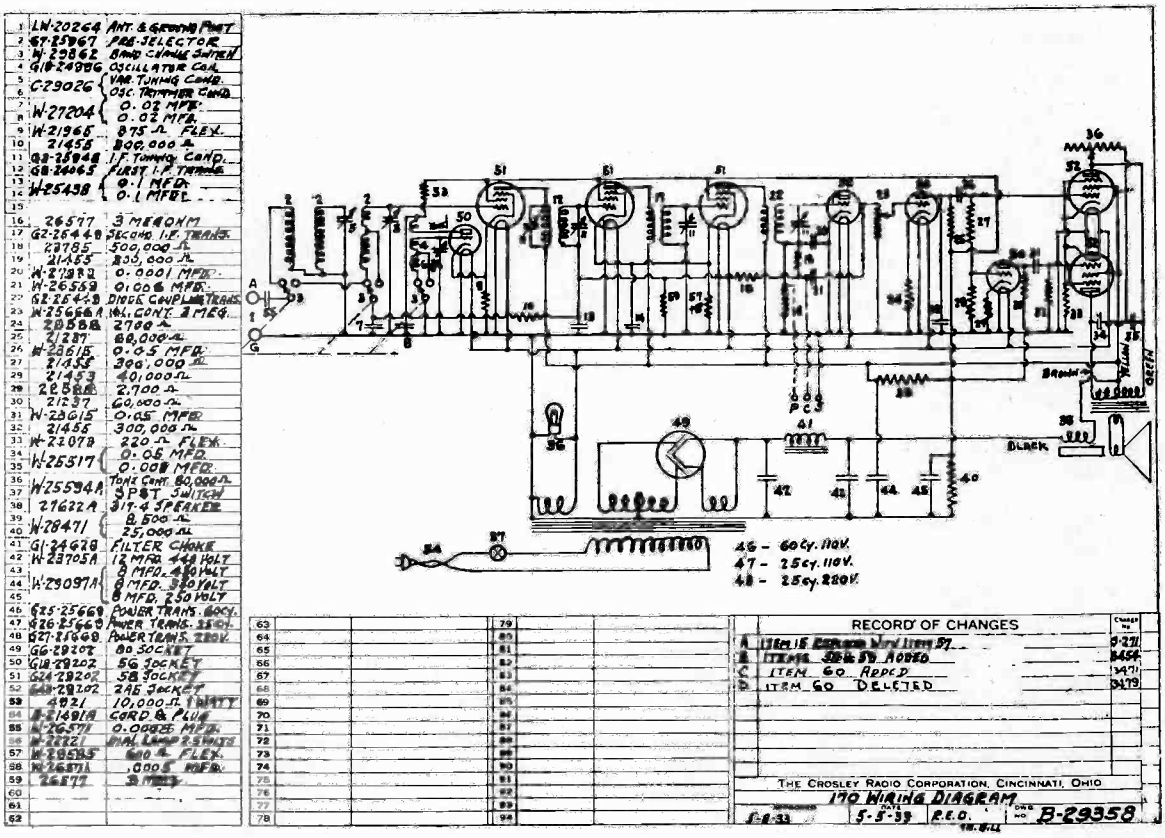

The Crosley Radio Corporation, Cincinnati, Ohio

Model 171

Specifications

Model 171 is a twelve tube dual band superheterodyne designed for operation from A.C. electric circuits. The intermediate frequency is 181.5 Kc.

Voltages and Tube Limits

The following are the tubes and voltages measured with the receiver in operating condition but with no signal to the antenna circuit, and with a line voltage of 117.5 volts (235 volts for 220 volt receivers). All voltages, except filament are measured with a 500 volt D.C. voltmeter (1000 ohms per volt) from tube contact to chassis. Filament voltages are measured with a low range A.C. voltmeter.

Tube	Position	Plate	Screen Grid	Cathode	Suppressor Grid	Filament
58	R. F. Amplifier	267	115	3.0	3.0	2.5
56	Oscillator	60		7.0		2.5
58	Modulator	267	115	5.5	5.5	2.5
58	I. F. Amplifier	267	115	4.5	4.5	2.5
2B7	A. V. C. Tube	267	115	4.5	4.5	2.5
56	QAVC Tube	70		0-20.0*		2.5
56	Detector	0		0		2.5
56	Phase Shifter	58		2.5		2.5
56	A. F. Amplifier	170		115		2.5
2-2A5	Output	260	267	17.5		2.5
80	Rectifier	355				4.9

Voltage limits are plus or minus 10% of values given.
***Voltage depends on position of "Q" control.**

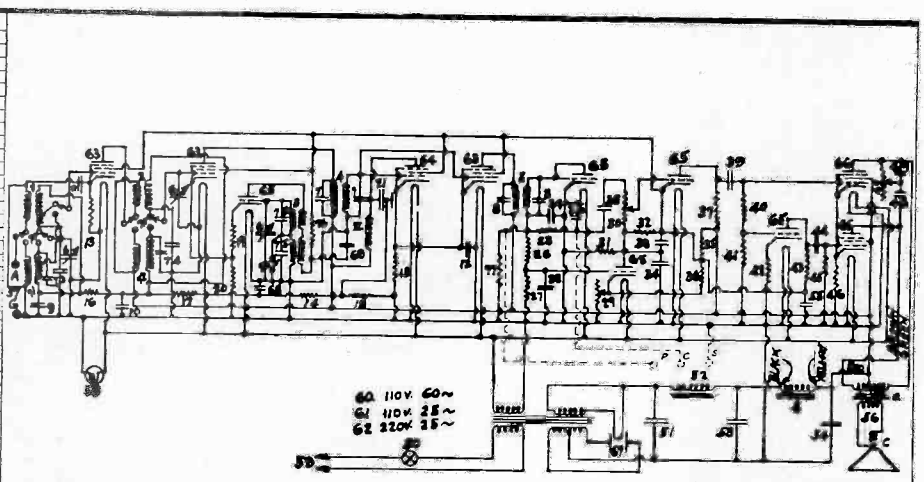

1	67-24995	ANT. LOW F. COIL
2	62-29968	R.F. LOW F. COIL
3	61-29690	OSC. COIL
4	66-24062	1ST I.F. COIL
5	610-24062	2ND I.F. COIL
6	C-22666	VARIABLE COND.
7	66-28948	1ST I.F. TWN COND.
8	62-28948	2ND I.F. TWN COND.
9	W-27204	0.02 MFD. 200V.
10		0.02 MFD. 200V.
11	W-25438	0.1 MFD. 200V.
12		0.1 MFD. 200V.
13	W-25937	275 Ω
14	28786	500,000 Ω
15	W-25937	275 Ω
16	28785	500,000 Ω
17	28785	500,000 Ω
18	28785	500,000 Ω
19	W-25937	275 Ω
20	W-28589	350 Ω
21	W-27540	0.0008 MFD. 400V.
22	28445	PLATE CHOKE COIL
23	28785	500,000 Ω
24	W-26152	0.00015 MFD. 400V
25		0.0001 MFD. 400V.
26	26578	5 MEG.
27	26577	3 MEG.
28	W-27203	0.02 MFD. 200V
29	W-29687A	"Q" LEVEL CONTROL
30	W-25668	AUDIO LEVEL CONT.
31	26577	3 MEG.
32	28403	150,000 Ω
33	W-25516	0.25 MFD. 200V
34		0.25 MFD. 200V.
35	W-28471	8,500 Ω
36		25,000 Ω
37	28403	150,000 Ω
38	W-28142	0.02 MFD. 400V.
39	W-28613	0.05 MFD. 400V.
40	21485	200,000 Ω
41	21458	40,000 Ω
42	28588	2700 Ω
43	21227	60,000 Ω
44	W-23615	0.05 MFD. 400V.
45	21455	200,000
46	W-22872	220 Ω
47	W-25517	0.008 MFD. 400V.
48		0.05 MFD. 400V.
49	W-25594B	TONE CONTROL
50		S.P.S.T. SWITCH
51	W-23765A	12 MFD. 440V.
52	61-24628	FILTER CHOKE
53	W-28097	8 MFD. 450V.
54		8 MFD. 350V.
55		8 MFD. 250V.
56	27622	8 17-4 M. SPEAKER
57	W-20264	ANT.-GND. TERM.
58	W-22221	2.5V. DIAL LIGHT
59	B-21491A	CABLE & PLUG
60	625-25669	POWER TRANS. 60~
61	626-25669	POWER TRANS. 25~
62	627-25669	POWER TRANS. 220V.

63	614-29202	58 SOCKET
64	646-29202	2B7 SOCKET
65	618-29202	56 SOCKET
66	643-29202	2A5 SOCKET
67	66-29202	80 SOCKET
68	W27204	0.02 MFD. 200V.
69		0.02 MFD. 200V.
70	B-29681A	G.P.D.T. SWITCH
71	614-24995	ANT. HIGH F. COIL
72	62-29968	R.F. HIGH F. COIL
73	61-29689	ANT. TRANS. TR. COND.
74	61-29689	R.F. TRANS. TR. COND.
75	61-29690	OSC. TRIMMER COND.
76	21876	10,000 Ω
77	21464	1 MEG.
78		

The material presented on this page has been prepared by and is printed through the courtesy of THE CROSLEY CORP.

THE CROSLEY RADIO CORPORATION, CINCINNATI, OHIO
171 WIRING DIAGRAM
5-16-33 B-29706

IMPORTANT NOTICE

In this and many other CROSLEY circuits, the number-figure adjacent to the schematic of the tube symbol refers to this part number in the parts list where the actual tube type number is stated.

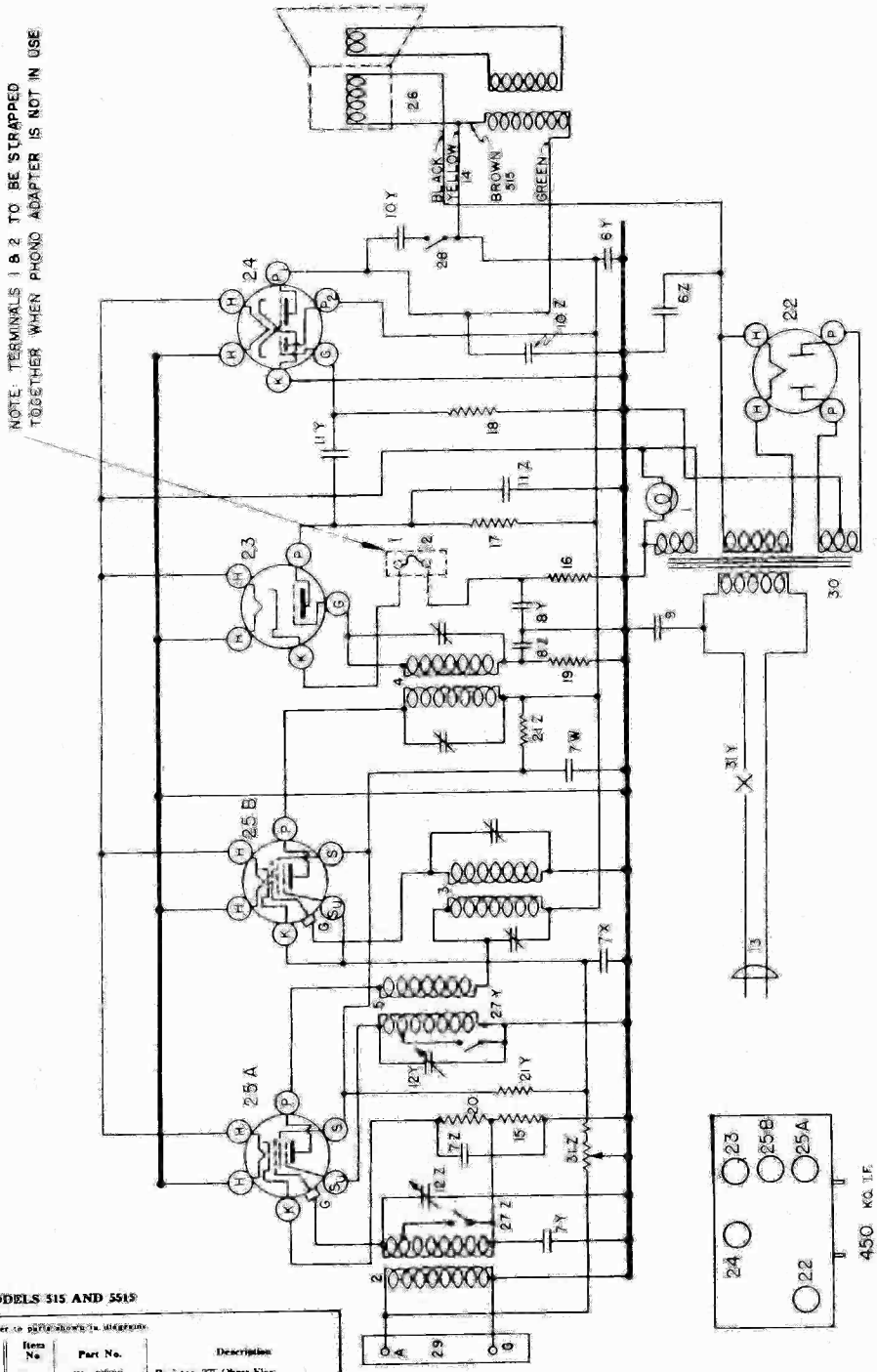

WIRING DIAGRAM OF MODELS 515 AND 5515

PARTS LIST—MODELS 515 AND 5515

Figures in first column refer to parts shown in diagram.

Item No.	Part No.	Description
1	G4—27134	Dial Light Socket Assembly.
2	G42—32000	Coil Ant.
3	G48—32004	1st. I. F. Trans.
4	G49—32004	2nd. I. F. Trans.
5	G47—32002	Osc. Coil.
6Z, 6Y	W—36719	Condenser, 8 Mfd., 450 Volts.
7Z, 7Y	W—28623	Condenser, 6 Mfd., 450 Volts.
7X		Condenser, 0.02 Mfd. 300 Volt.
7W	W—28623	Condenser, 0.02 Mfd. 300 Volt.
8Z, 8Y	W—28622	Condenser, 0.02 Mfd. 300 Volt.
9	W—30805	Condenser, 0.02 Mfd. 300 Volt.
10Z, 10Y	W—35011	Condenser, 0.1 Mfd. 200 Volt.
11Z, 11Y	W—25537A	Condenser, 0.1 Mfd. 200 Volt.
12Z, 12Y	G14—33001	Condenser, 0.01 Mfd. 400 Volt.
	—36148	Condenser, 0.006 Mfd. 400 Volt.
13	B—33906A	Condenser, 0.03 Mfd. 400 Volt.
14	G3—35696	Condenser, 0.001 Mfd. 400 Volt.
15	—31694	Condenser, 0.03 Mfd. 400 Volt.
16	—21237A	Variable Tuning Condenser Gang
17	—21155	Dial Assembly complete.
18	—21785	Cord—Power Supply.
19	—21494	Speaker Cable (5515 only).
		Resistor, 1,500 Ohms.
		Resistor, 60,000 Ohms.
		Resistor, 300,000 Ohms.
		Resistor, 500,000 Ohms.
		Resistor, 1 Megohm.

Item No.	Part No.	Description
20	W—25937	Resistor, 275 Ohms Flex.
21Z, 21Y	W—35963	Resistor, 8,500 Ohms.
		Resistor, 25 000 Ohms.
22	G6—28807	Socket, 80.
23	G80—28807	Socket, 76.
24	G90—28807	Socket, 6B5.
25A	G75—28807	Socket, 6D6.
25B	G75—28807	Socket, 6D6.
	W—35772	Tube Shield, Half.
	W—35773	Tube Shield Cap.
	W—35774	Tube Shield Base.
26	—219-BL9	Speaker.
27Z, 27Y	W—35753A	Band Change Switch.
28	W—36184A	Tone Control Switch.
29	G1—26719	Ant. Gnd. Terminal.
30	G5—28500	Power Transformer, 60 Cy., 110 V.
	G6—28500	Power Transformer, 25 Cy., 110 V.
	G7—28500	Power Transformer, 25 Cy., 220 V.
31Z, 31Y	—37343	Volume Control.
		On-Off Switch.
	B—35917	Escutcheon.
	—37158	Dial Glass.
	—37156	Dial Pointer.
	—37157	Pointer Screw.
	W—31545B	Knob (2) large.
	W—36355	Knob (2) small.

Crosley Radio

I.F. 450 KC.

The material presented on this page has been prepared by and is printed through the courtesy of THE CROSLEY CORP.

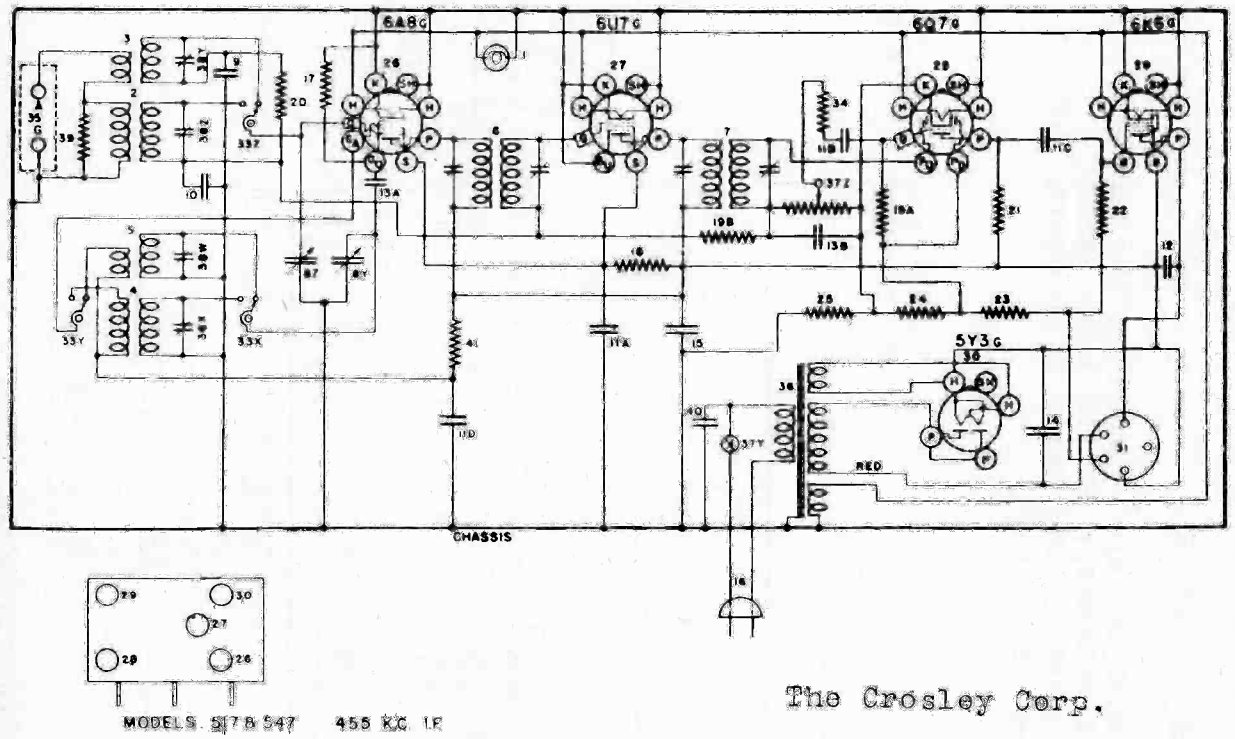

WIRING DIAGRAM—MODEL 517 AND 547

PARTS LIST — MODEL 517 AND 547

Figures in first column refer to parts in Diagrams.

Item No.	Part No.	Description
1	W —43567	Bulb—Dial Light
	W —43568	Light Bracket
2	G132—32000	Ant. Coil, B. C.
3	G133—32000	Ant. Coil, H. F.
4	G132—32002	Osc. Coil, B. C.
5	G133—32002	Osc. Coil, H. F.
6	G136—32004	1st I-F Assembly
7	G137—32004	2nd I-F Assembly
8	G33 —33001	2 Sect. Var. Tuning Cond.(547 only)
8	G31 —33001	2 Sect. Var. Tuning Cond.(517 only)
	B —43551	Dial Face (517 only)
	B —43729	Dial Face (Tel. Tun. Dial only)
	W —43694	Disc—Center of Dial
	W —43693	Mask Ring (Dial)
	W —43778	Dial Support Ring
	B —43544	Dial Glass Support
	G1 —43564	Pulley Assembly
	W —43548	Drive Shaft
	W —43549	Retaining Ring
	W —43550	Pointer (517 only) Dial Drive
	W —43542A	Drive Shaft Bracket
	W —43561	Drive Cable Spring
	—41582	Drive Cable
9	G12 —34002	Condenser .0005 Mf. H.F. Osc. Ser.
10	—36541	Condenser .02 Mf. 160 V.
11ABCD	W —28621	Condenser .02 Mf. 200 V.
12	W —34647	Condenser .01 Mf. 400 V.
13AB	G1 —34002	Condenser .00025 Mf. Molded
14	W —41081	Condenser 16 Mf. 250 V.
15	W —43450	Condenser 16 Mf. 200 V.
16	B —33906A	Power Cord and Plug
17	—21237A	Resistor 60,000 Ohm ¼W.
18	—24814	Resistor 7,000 Ohm ¼W.
19AB	—36688	Resistor 3 Megohm ¼W.
20	—21455	Resistor 300,000 Ohm ¼W.
21	—35601	Resistor 300,000 Ohm ¼W.
22	—23785	Resistor 500,000 Ohm ¼W.
23	W —28589	Resistor 350 Ohm ½W. Flex.
24	W —33012A	Resistor 40 Ohm ½W. Flex.
25	W —24537	Resistor 60 Ohm ½W. Flex.
26	G156—36400	Socket Type 6A8
27	G171—36400	Socket Type 6U7
28	G160—36400	Socket Type 6Q7
29	G172—36400	Socket Type 6K6

Item No.	Part No.	Description
30	G173—36400	Socket Type 5Y3
	W —40911	Tube Shield
31	G103—28807	Socket—Speaker
32	257BP11"B"	Speaker, Spec. No. 51-A-5 (Cab. 6K & 7KA)
	—42927	Cone for 257BP11 "B" Speaker
	—41473	O. P. Trans. for 257BP11 "B" Spkr.
	—43539	Cardb'd Ring for 257BP11 "B" Spk.
	257BP18"B"	Speaker, Spec. No. 51-A-8 (Cab. 7H & 7HA)
	—42927	Cone for 257BP18 "B" Speaker
	—43986	O. P. Trans. for 257BP18 "B" Spkr.
	—43539	Cardb'd Ring for 257BP18 "B" Spk.
	462CP11 "M"	Spkr., Spec. No. 1-D-971 (Cab.6FF)
	—40405	Cone for 462CP11 "M" Speaker
	—43989	O. P. Trans. for 462CP11 "M" Spkr.
	—43988	Field Coil for 462CP11 "M" Spkr.
	464BP15 "M"	Spkr., Spec. No. 1-D-1017(Cab. 7M)
	—43993	Cone for 464BP15 "M" Speaker
	—43994	Field Coil for 464BP15 "M" Spkr.
	—43995	O. P. Trans. for 464BP15 "M" Spkr.
33	W —43448	Switch Band Selector
34	—36761	Resistor 40,000 Ohm ¼W.
35	G1 —26719	Ant. and Ground Terminal Board
36	—43479	Power Trans. 110 V. 60 Cy.
	—43480	Power Trans. 110 V. 25 Cy.
	—43481	Power Trans. 220 V. 25 Cy.
37Z	—43449	Volume Control, 1 Megohm
37Y		Line Switch
38Z		Trimmer Cond. B. C. Ant.
38Y	W —41247A	Trimmer Cond. H. F. Ant.
38X		Trimmer Cond. B. C. Osc.
38W		Trimmer Cond. H. F. Osc.
39	—22196	Resistor 20,000 Ohm ¼W
40	W —30805	Condenser .01 Mf. 400 V.
41	—30137	Resistor 3,500 Ohm ¼W.
	GJ —43724	Tel. Tun. Escutcheon
	W —43769	Pointer—Cabinet (547 only)
	W —43554	Knob (1 required) Small
	W —43625	Knob (2 required) Large
	W —43553	Rubber Mtg. Foot
	W —43552	Clamp—Speaker Plug
	W —43726	Celluloid Disc (547 only)

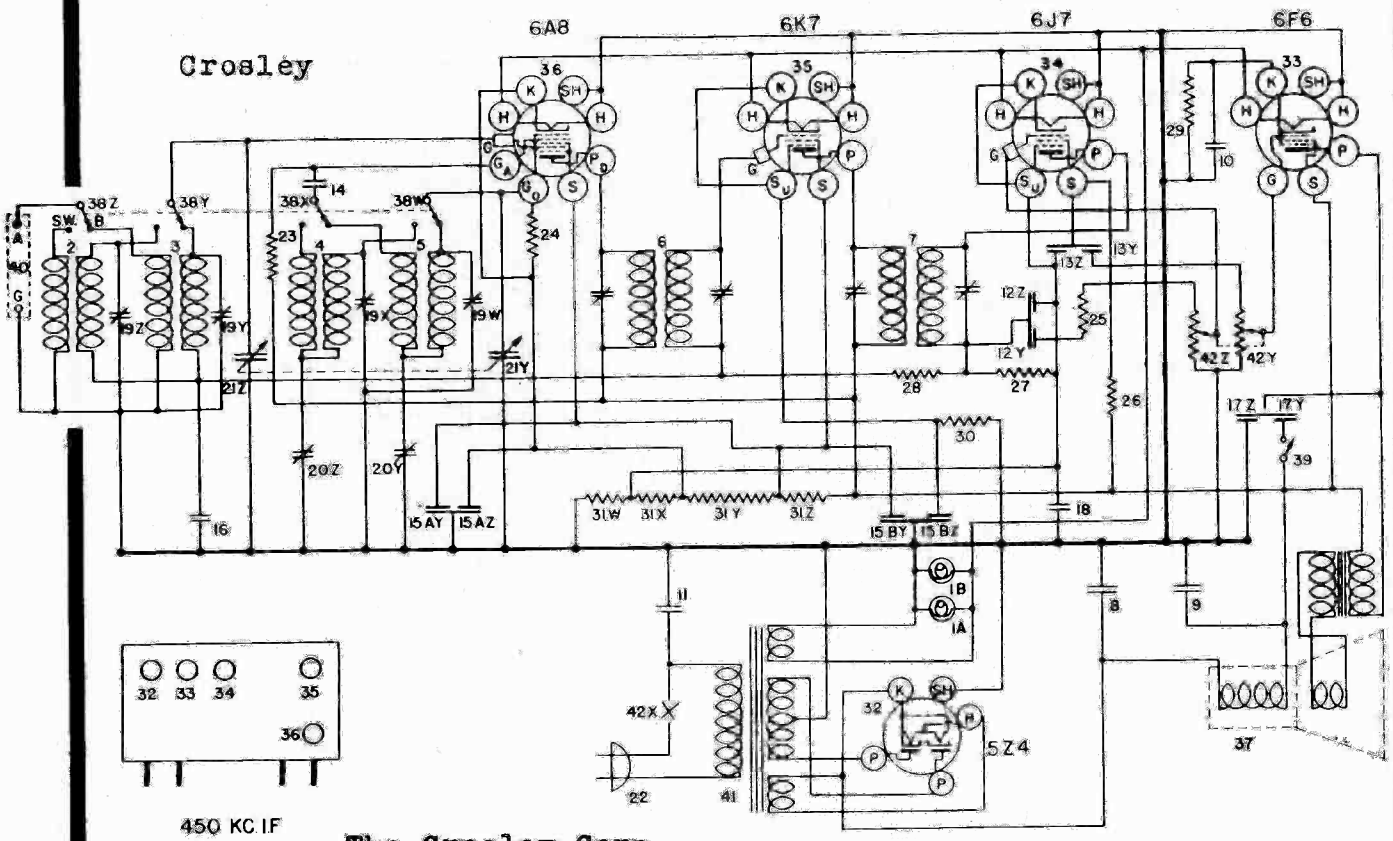

The Crosley Corp.

WIRING DIAGRAMS—MODELS 555 AND 5555

Item No.	Part No.	Description
1A	G6 —27134	Dial Light Assm.
1B	G6 —27134	Dial Light Assm.
2	G82 —32000	Ant. Coil, S. W. B.
3	G81 —32000	Ant. Coil, B. C. B.
4	G65 —32002	Osc. Coil, S. W. B.
5	G66 —32002	Osc. Coil, B. C. B.
6	G71 —32004	1st I. F. Assm.
7	G72 —32004	2nd I. F. Assm.
8	W —36055	Condenser, 35. Mfd. 400 Volt
9	W —36057	Condenser, 40. Mfd. 300 V.
10	W —36931	Condenser, 12 Mfd. 25 V.
11	W —30805	Condenser, 0.01 Mfd. 400 V.
12Z	W —30322A	Condenser, 0.00017 Mfd. 200 V.
12Y		Condenser, 0.006 Mfd. 200 V.
13Z	W —25537A	Condenser, 0.001 Mfd. 400 V.
13Y		Condenser, 0.03 Mfd. 400 V.
14	W —23191A	Condenser, 0.01 Mfd. 400 V.
15AZ	W —28623	Condenser, 0.02 Mfd. 200 V.
15AY		Condenser, 0.02 Mfd. 200 V.
15BZ	W —28623	Condenser, 0.02 Mfd. 200 V.
15BY		Condenser, 0.02 Mfd. 200 V.
16	W —27216	Condenser, 0.05 Mfd. 200 V.
17Z	W —35011	Condenser, 0.006 Mfd. 400 V.
17Y		Condenser, 0.03 Mfd. 400 V.
18	W —36541	Condenser, 0.02 Mfd. 160 V.
19Z, 19Y, 19V, 19W	W —37241A	4 Section Trimmer Cond.
20Z	G29 —33006	S. W. Osc. Series Padder
20Y		B. C. Osc. Series Padder
21Z, 21Y	G17 —33001	Var. Tuning Cond. Gang
	—37353C	Dial Assm. Complete
	—37158	Dial Glass
	—37156	Dial Pointer
	—37157	Pointer Screw

Item No.	Part No.	Description
	—37354	Dial Face only
22	B —33906A	A. C. Cord & Plug
23	—5370A	Resistor, 20,000 Ohm
24	—21237	Resistor, 60,000 Ohm
25	—21875	Resistor, 100,000 Ohm
26	—21455	Resistor, 300,000 Ohm
27	—33344	Resistor, 400,000 Ohm
28	—37245	Resistor, 1.5 Megohm
29	W —25291	Resistor, 500 Ohm 1½ W. (Flex)
30	W —28106	Resistor, 500 Ohm ½ W. (Flex)
31Z	W —37246A	Resistor, 10,000 Ohm Candohm
31Y		Resistor, 25,000 Ohm Candohm
31X		Resistor, 185. Ohm Candohm
31W		Resistor, 185. Ohm Candohm
32	G154—36400	Socket, 5Z4
33	G153—36400	Socket, 6F6
34	G157—36400	Socket, 6J7
35	G151—36400	Socket, 6K7
36	G156—36400	Socket, 6A8
37	331—CL—9	Speaker, (555)
	432—CJ—3M	Speaker, (5555) Console
	G3 —35696	Speaker Cable (5555)
38W To 38Z	—37247	Band Change Switch
39	W —36184A	Tone Control Switch
40	G1 —26719	Ant. & Grd. Terminal
41	G12 —28500	Power Trans. 60 Cy. 110 V.
	G13 —28500	Power Trans. 25 Cy. 110 V.
	G14 —28500	Power Trans. 25 Cy. 220 V.
42Z	—37395	Volume Control A. F. Grid
42Y		Volume Control Output Grid
42X		On-Off Switch

PARTS LIST—MODELS 666 and 5666

Figures in first column refer to parts in Diagrams.

Item No.	Part No.	Name
1	W —37922	6-8 V. Bulb, Dial Light
	G3 —37965	Socket Assy., Dial Light
2	G82 —32000	Coil Antenna—2350—7000 Kc.
3	G81 —32000	Coil Antenna—540—1725 Kc.
4	G 65—32002	Coil—2350—7000 Kc., Osc.
5	G 66—32002	Coil— 540—1725 Kc., Osc.
6	G118—32004	Coil—Assy., 1st I-F.
7	G 72—32004	Coil—Assy., 2nd I-F.
8	W —36055	Cond. 35 Mf. 400 V.
9	W —36057	Cond. 40 Mf. 300V.
10	W —30270	Cond. .001 Mf. 400V.
11	W —30805	Cond. .01 Mf. 400V.
12Z	W —30322-A	Cond. .00017 Mf.
12Y		Cond. .006 Mf.
13	W —23615	Cond. .05 Mf. 400V.
14	W —23191-A	Cond. .01 Mf. 400V.
15 AZ	W —28623	Cond. .02 Mf. 400V.
15 AY		Cond. .02 Mf. 400V.
15 BZ	W —28623	Cond. .02 Mf. 400V.
15 BY		Cond. .02 Mf. 400V.
16	W —27216	Cond. .05 Mf. 200V.
17 Z	W —31052	Cond. .004 Mf. 400V.
17 Y		Cond. .05 Mf. 400V.
18	W —37732	Cond. .3 Mf. 160V.
19	W —37241	Cond. 4 Section Trimmer
20	G 31—33006	Cond. Series Trimmers
21	G 17—33001	Cond. Var. Tuning
	W —41736	Drive Unit, 8Pt. Disc Assy.
	W —41897	Dial-Calibrated Glass (Model 666 —Only)
	W —41737	Mtg. Brkt. Dial Glass R.H.
	W —41738	Mtg. Brkt., Dial Glass, L.H.
	W —41739	Drive Unit
	B —42617	Dial (Calibrated) (Model 5666 Only)
	MG—14—41980	Dial Glass, Mtg. Brkt. R.H.
	W —40798	Dial Glass, Mtg. Brkt., L.H.
	W —40797-A	Dial Glass Retaining Brkt.
	W —42629	Pointer—Dial
	W —40795	Shaft—Pointer
	W —40909	Washer (Spring) Shaft
	W —41611	Ring-Shaft, Retaining
	B —42374-A	Mask (Metal) Dial
22	B —33906-A	Cord & Plug—Power
23	— 5370-A	Resistor, 20,000 Ohm 1W.
24	—35928	Resistor, 60,000 Ohm ¼W.
25	—21875	Resistor, 100,000 Ohm ½W.
26	—35929-C	Resistor, 150,000 Ohm. ½W.
27	—33344	Resistor, 400,000 Ohm. ¼W.
28	—37245-C	Resistor, 1.5 Megohm ¼W.
29	—36316	Resistor, 2,700 Ohm. ¼W.
30	W —28106	Resistor, 500 Ohm. ½W. Flex.
31Z	W —37246	Resistor, 1,000 Ohm (Candohm)
31Y		Resistor, 2,000 Ohm * (Candohm)
31X		Resistor, 185-185 Ohm (Candohm)
32	G47 —28807	Socket—Type 6A7
33	G75 —28807	Socket—Type 6D6
34	G80 —28807	Socket—Type 76
35	G41 —28807	Socket—Type 75
36	G90 —28807	Socket—Type 6B5
	W —27981	Base—Tube Shield
	W —40911	Shield—Tube
37	244—BL—9	Speaker, "B" Spec. 50A-2
	—42928	Cone Assy., For above Speaker
	—41473	Output Trans., For above Speaker
	632—CJ—3	Speaker, "M" Spec. 1-D-610
	—42879	Cone Assy., For above Speaker
	—42880	Field Coil, For above Speaker
	—42881	Output Trans., For above Speaker
38	—37247	Switch, Band Sel.
39	W—36184-A	Switch, Tone Con.
40	G1 —26719	Terminal Board, Ant. & Grid
41	—41978	Transformer, 110V.—60 Cy. Power
42Z	—37395	Volume Control (3 Meg.) 1st A-F Grid
42Y		Line Switch
42X		Volume Control (1 Meg.) Output Grid
43	NONE	
44	—35601	Resistor, 300,000 Ohm ½ W. Output Grid to Grid.*
	B —40590	Escutcheon, (666)
	W —42345	Escutcheon, (5666)
	D —28	Escutcheon Mtg. Screws
	W —37339	Knob, (2) V.C. & S.S.
	W —37341	Knob, (2) T.C. & B.S.W.
	—36297	Volume Control, 3 Meg.*
	AG	Cabinet Model 666
	MA	Cabinet Model 5666

*May be used in place of Dual Volume Control.

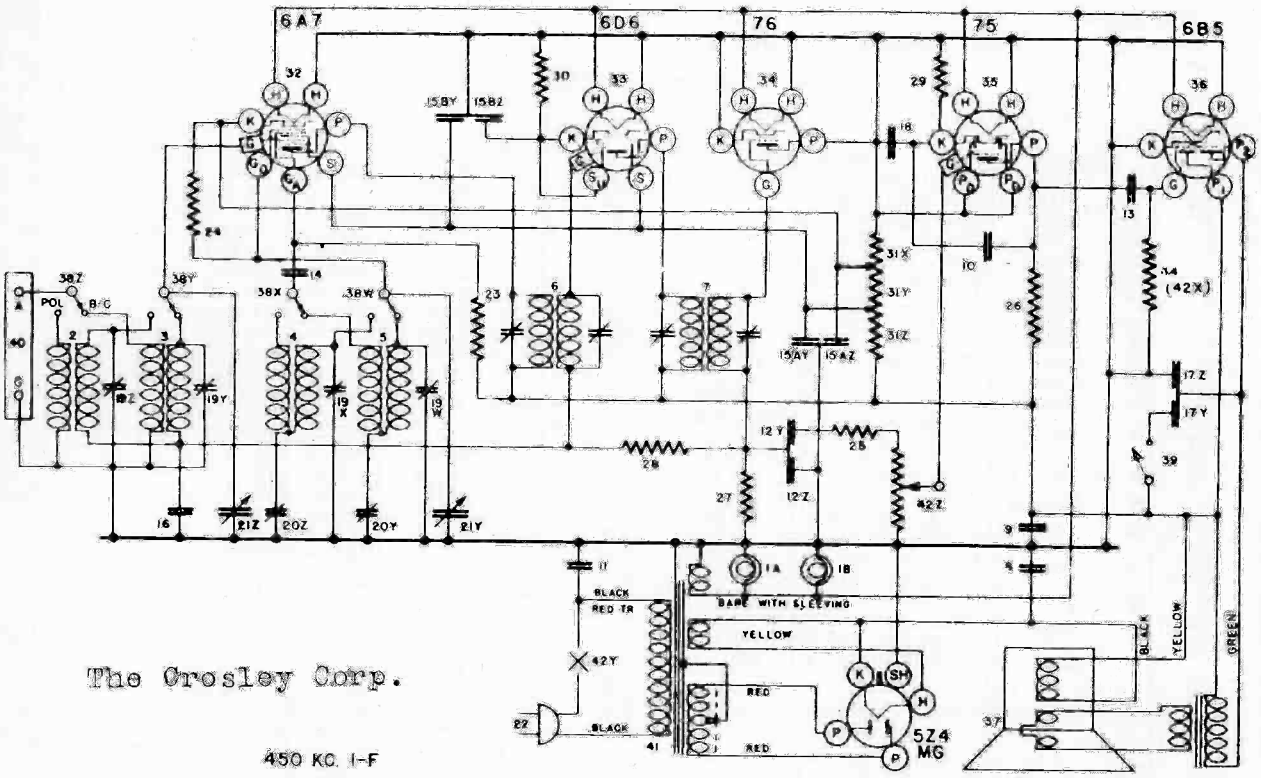

WIRING DIAGRAM—MODELS 666 AND 5666

Crosley Model 706

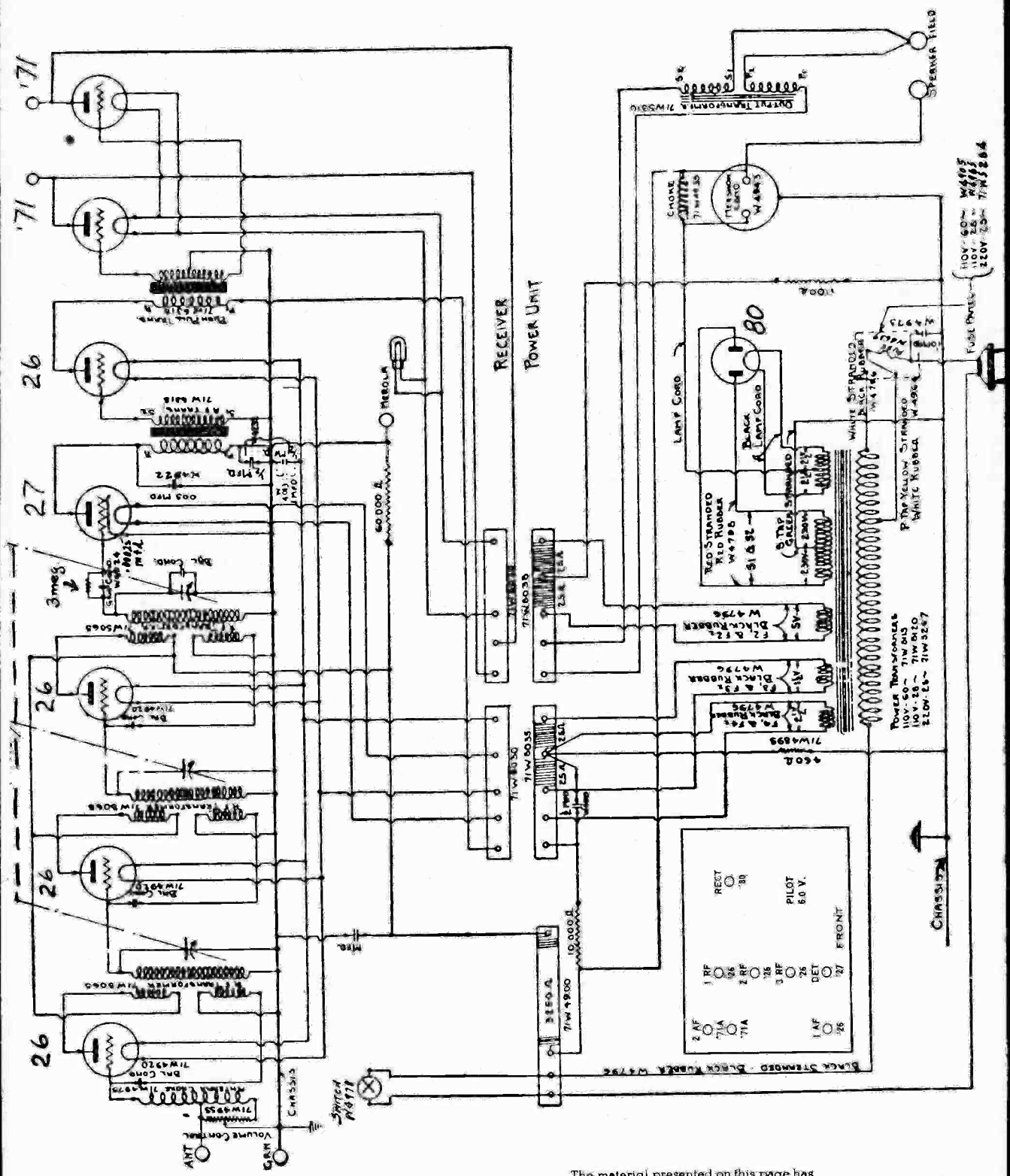

The material presented on this page has been prepared by and is printed through the courtesy of THE CROSLEY CORP.

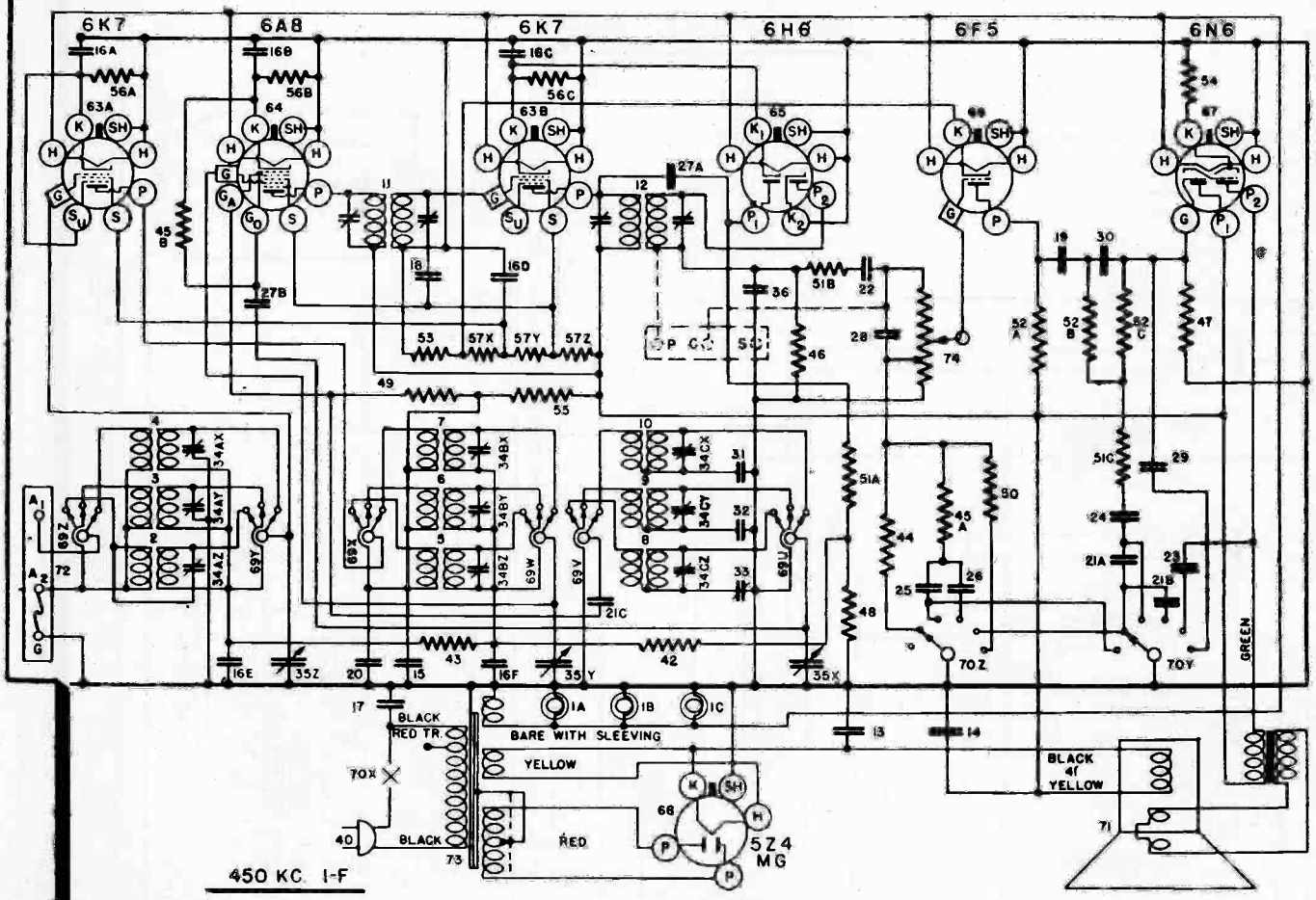

WIRING DIAGRAM—MODEL 726

The Crosley Corp.

PARTS LIST—MODEL 726

Figures in first column refer to parts in Diagrams.

Item No.	Part No.	Description	Item No.	Part No.	Description
1ABC	W —37922	Dial Light	44	—36319	Resistor, 75,000 Ohm. ½ W.
	G3 —37865	Socket Assy. Dial Light	45A	—35928	Resistor, 60,000 Ohm. ½ W.
2	G110—32000	Coil Ant. 540-1800 Kc.	45B	—35928	Resistor, 60,000 Ohm. ½ W.
3	G111—32000	Coil Ant. 1800-6000 Kc.	46	—36321	Resistor, 400,000 Ohm. ½ W.
4	G112—32000	Coil Ant. 6.-18 Mc.	47	—36623	Resistor 750,000 Ohm. ½ W.
5	G76 —32001	Coil R. F. 540-1800 Kc.	48	—36322	Resistor, 500,000 Ohm. ½ W.
6	G89 —32001	Coil R. F. 1800-6000 Kc.	49	—37377	Resistor, 20,000 Ohm. 1 W.
7	G90 —32001	Coil R. F. 6.-18 Mc.	50	—35929	Resistor, 150,000 Ohm. ½ W.
8	G115—32002	Coil Osc. 540-1800 Kc.	51A	—35601	Resistor, 300,000 Ohm. ½ W.
9	G121—32002	Coil Osc. 1800-6000 Kc.	51B	—35601	Resistor, 300,000 Ohm. ½ W.
10	G122—32002	Coil Osc. 6.-18 Mc.	51C	—35601	Resistor, 300,000 Ohm. ½ W.
11	G121—32001	1st. IF. Assy.	52A	—35930	Resistor, 200,000 Ohm. ½ W.
12	G120—32004	2nd. IF. Assy.	52B	—35930	Resistor, 200,000 Ohm. ½ W.
13	W —36055	Condenser, 35Mf. 400V.	52C	—35930	Resistor, 200,000 Ohm. ½ W.
14	W —36067	Condenser, 40Mf. 300V.	53	W —30127	Resistor, 450 Ohm. ½ W. Flex.
15	W —41081	Condenser 16Mf. 250V.	54	W —23012A	Resistor, 40 Ohm. ½ W. Flex.
16A			55	—6705	Resistor, 3500 Ohm. 1 W.
TO	W —36541	Condenser, .02Mf. 160V.	56A	W —28589	Resistor, 350 Ohm. ½ W. Flex.
16F	W —36541	Condenser, .02Mf. 160V.	56B	W —28589	Resistor, 350 Ohm. ½ W. Flex.
17	W —30806	Condenser, .01Mf. 400V.	56C	W —28589	Resistor, 350 Ohm. ½ W. Flex.
18	W —35936	Condenser, .05Mf. 200V.	57		Resistor, 16,500 Ohm.
19	W —32780B	Condenser, .05Mf. 400V.	57A	W —37781	Resistor, 4 000 Ohm. Cand. Ohm.
20	W —32378	Condenser, .01Mf. 400V.	57X		Resistor 18,500 Ohm.
21A	W —35139	Condenser, .004Mf. 400V.	63A	G151—36400	Socket Type 6K7
21B	W 35139	Condenser, .004Mf. 400V.	63B	G151—36400	Socket Type 6K7
21C	W —35139	Condenser, .004Mf. 400V.	64	G156—36400	Socket Type 6A8
22	W —37621	Condenser, .02Mf. 200V.	65	G155—36400	Socket Type 6H6
23	W —23813	Condenser, .05Mf. 400V.	66	G158—36400	Socket Type 6F5
24	W —30253	Condenser, .01Mf. 200V.	67	G155—36400	Socket Type 6N6
25	W —36619	Condenser, .005Mf. 200V.	68	G154—36400	Socket Type 5Z4
26	W —25435	Condenser, .005Mf. 400V.	69	C —40910A	Band Selector Switch
27A	G2 —34002	Condenser, .0001Mf. (Mica)	70Z		Fidelity Switch
27B	G2 —34002	Condenser, .0001Mf. (Mica)	70Y		Fidelity Switch
28	G8 —34002	Condenser, .00001Mf. (Mica)	70X		Line Switch
29	G3 —34002	Condenser, .0005Mf. (Mica)	71	—645CJ3	Speaker "M" Spec. 1D640
30	G6 —34002	Condenser, .000025Mf. (Mica)		—42883	Cone Assy.
31	G20 —34000	Condenser, 4910Mmf. (Mica)		—40406	Field Coil } For Above Speaker
32	G7 —34000	Condenser, 1450Mmf. (Mica)		—42885	Outp't Trans.
33	—40769	Condenser, B. C. Osc. Series Trim.	72	G27 —26719	Ant. & Gnd. Terminal Assy.
34	W 33851	Condenser, 2 Section Trimmer	73	—42260	Power Trans. 60 Cy. 110 V.
35	G52 —33002	Condenser, 3 Gang Var. Tuning		—42261	Power Trans. 25 Cy. 110 V.
	MG33 —42255	Dial Drive Assy.	74	—42501	Volume Control 3 Meg.
	C —42491	Dial Glow (Calibrated)			Misc. Parts
	—42500	Drive Unit		C —42045	Escutcheon
	—37597	Dial Mask (Cardboard)		B —42043	Escutcheon Rubber
	W —42180	Dial Hand, Pointer		D — 30	Screws—Escutcheon Mtg.
	—41144	Dial Hand, Time Log		C —42044	Lens—Escutcheon
	W —40486	Pointer Mtg. Screw		W —402309	Emblem
36	G1 —34002	Condenser, .00025 Mf. (Mica)		W —32620	Nut—Emblem Mtg.
37	W —30270	Condenser, .01 Mf. 400V.		W —35117	Rubber Mtg. Foot
40	B —39806A	Power Cord & Plug		W —37539	Knob. (2 Req.)
41	G3 —39806	Cable, Speaker		W —401928	Knob, B. S. Sw. (1 Req.)
42	—37345	Resistor, Mex. Ohm. ½ W.		W —42490	Knob, S. S. (1 Req.)
43	—35600	Resistor, 100,000 Ohm ½ W.		6-NG	Cabinet

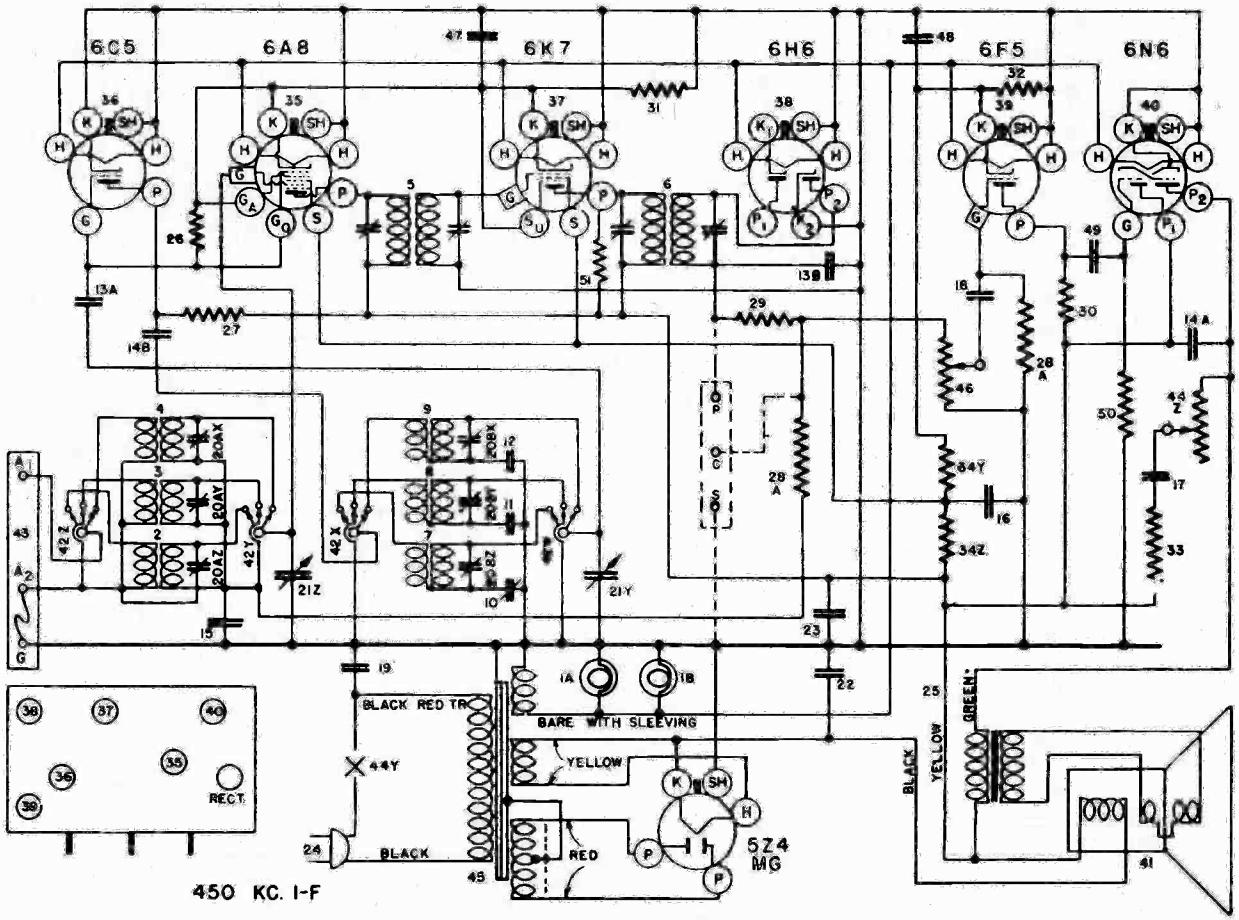

WIRING DIAGRAM—MODEL 716

Item No.	Part No.	Name
AB	W —37922	Bulb 6-8V., Dial Light
	G3 —37965	Socket Assy., Dial Light
2	G120 —32000	Coil, Ant. (540-1800 Kc.)
3	G119 —32000	Coil Ant. (1800 6000 Kc.)
4	G121 —32000	Coil, Ant. (5800-18000 Kc.)
5	G122 —32004	Coil Assy. 1st I-F (450Kc.)
6	G123 —32004	Coil Assy. 2nd I-F (450Kc.)
7	G112 —32002	Coil. Osc. (540-1800 Kc.)
8	G111 —32002	Coil. Osc. (1800-6000 Kc.)
9	G123 —32002	Coil Osc. (5800-18000 Kc.)
10	—40769	Cond. 400-500 Mmf.
11	G7 —34007	Cond. 1750 Mmf.
12	G 8 —34007	Cond. 4350 Mmf.
13A	G 2 —34002	Cond., .0001Mf.(Molded)
13B	G 2 —34002	Cond., .0001 Mf.(Molded)
14A	W —35139	Cond., .004 Mf. 400V.(Tub.)
14B	W —35139	Cond., .004Mf.400V.(Tub.)
15	W —35936	Cond., .05Mf.200V.(Tub.)
16	W —24049-B	Cond., .1Mf.200V.(Tub.)
17	W —37873	Cond., .1Mf. 400V.(Tub.)
18	W —30488	Cond., .02Mf.400 V.Tub.)
19	W —30805	Cond., .01 Mf.400V.(Tub.)
20	W —35951	Cond.-3 Section Trimmer
21	G21 —33001	Cond.-2 Section Tuning
	B —42142-A	Dial-Calibrated Glass
	—42346	Drive Unit
	B —42338	Mask-Metal
	—41145	Pointer-Dial
	W —40486	Screw, Pointer Mtg.
	MG27—42151	Dial Drive Complete
	—41582	Cable, Drive
22	W —36055	Cond., 35Mf.400V.(Elect.)
23	W —36057	Cond., 40Mf.300V.(Elect.)
24	B —33906-A	Cord and Plug, Power
25	G4 —35696	Speaker Cable
26	—40757	Resistor, 50,000 Ohm ¼W. (Car.)
27	W —37987	Resistor, 15,000 Ohm 1W (Wire Wound)

Item No.	Part No.	Name
28A	—36688	Resistor, 3 Megohm ¼W. (Car.)
28B	—36688	Resistor, 3 Megohm ¼W. (Car.)
29	—21455	Resistor, 300,000 Ohm ¼W. (Car.)
30	—35930	Resistor, 200,000 Ohm ¼W. (Car.)
31	W —21964	Resistor, 165 Ohm ¾W. (Flex.)
32	W —35457	Resistor, 210 Ohm ¾W. (Flex.)
33	W —27503	Resistor, 1400 Ohm ¾W. (Flex.)
34Z	W —32301	Resistor, 10,000 Ohm Candohm
34Y		Resistor, 15,000 Ohm
35	G156 —36400	Socket Type 6AB
36	G152 —36400	Socket Type 6C5
37	G151 —36400	Socket Type 6K7
38	G155 —36400	Socket Type 6H6
39	G158 —36400	Socket Type 6F5
40	G165 —36400	Socket Type 6N6
41	332—BJ3	Speaker "M" Spec. 1-D-390
	—41638	Cone Assy. for "M"332BJ3
	—40275	Field Coil for "M"332PJ3
	—41639	Output Trans. for "M" 332BJ3
42	—40770-A	Switch, Band Selector
43	G27 —26719	Terminal Board, Antenna & Grd.
44Z	—37908	Tone Control, 100,000 Ohm
44Y		Switch, Line
45	—41978	Transformer, 110V. 60 Cy.
	—42149	Transformer, 110V. 25 Cy.
	—42150	Transformer, 220V. 25 Cy.
46	—37967	Volume Control 1Megohm
47	W —29910-A	Cond., .25Mf.200V.(Tub.)
48	W —28621	Cond., .02Mf.200V.(Tub.)
49	W —35758	Cond., .008, 400V. (Tub.)
50	—23785	Resistor, 500,000 Ohm ¼W. (Car.)
	W —42345	Escutcheon
	D —28	Screw Escutcheon Mtg.

THE CROSLEY CORP.

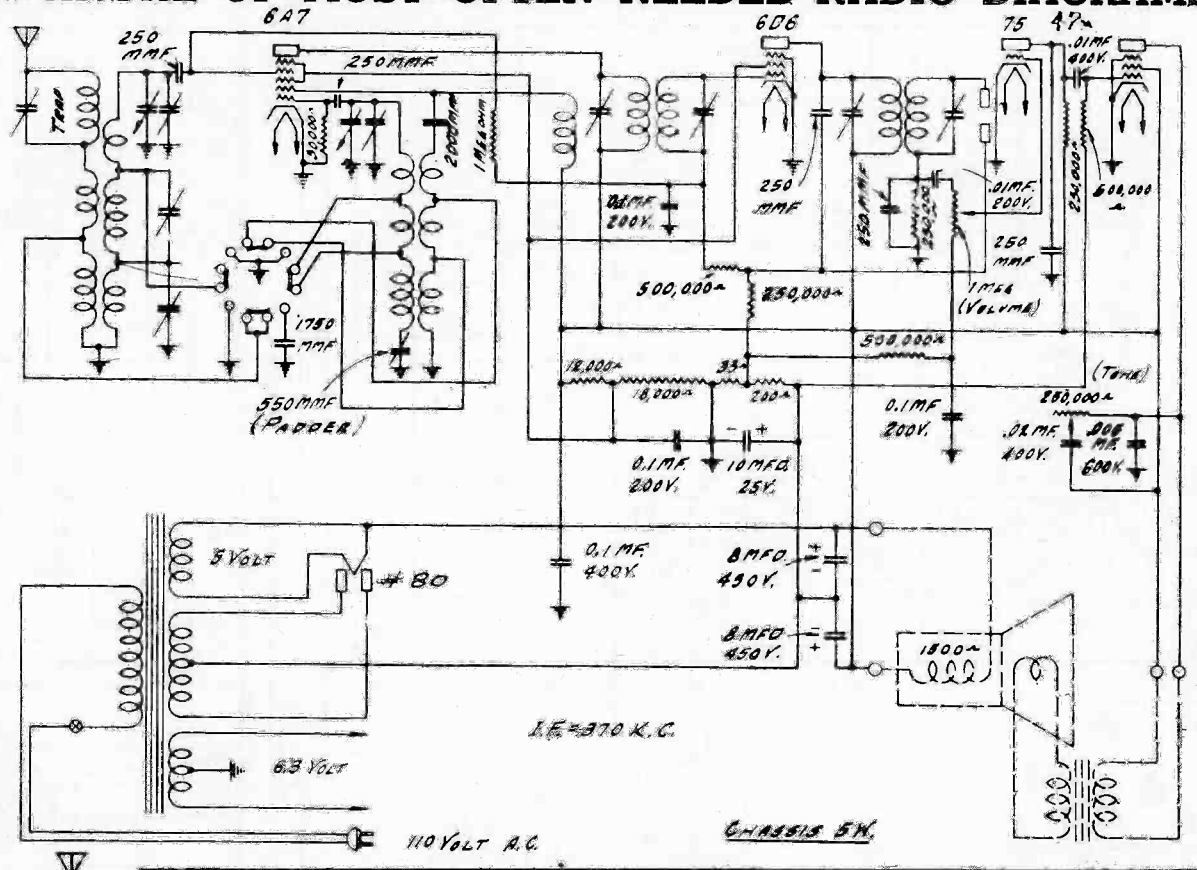

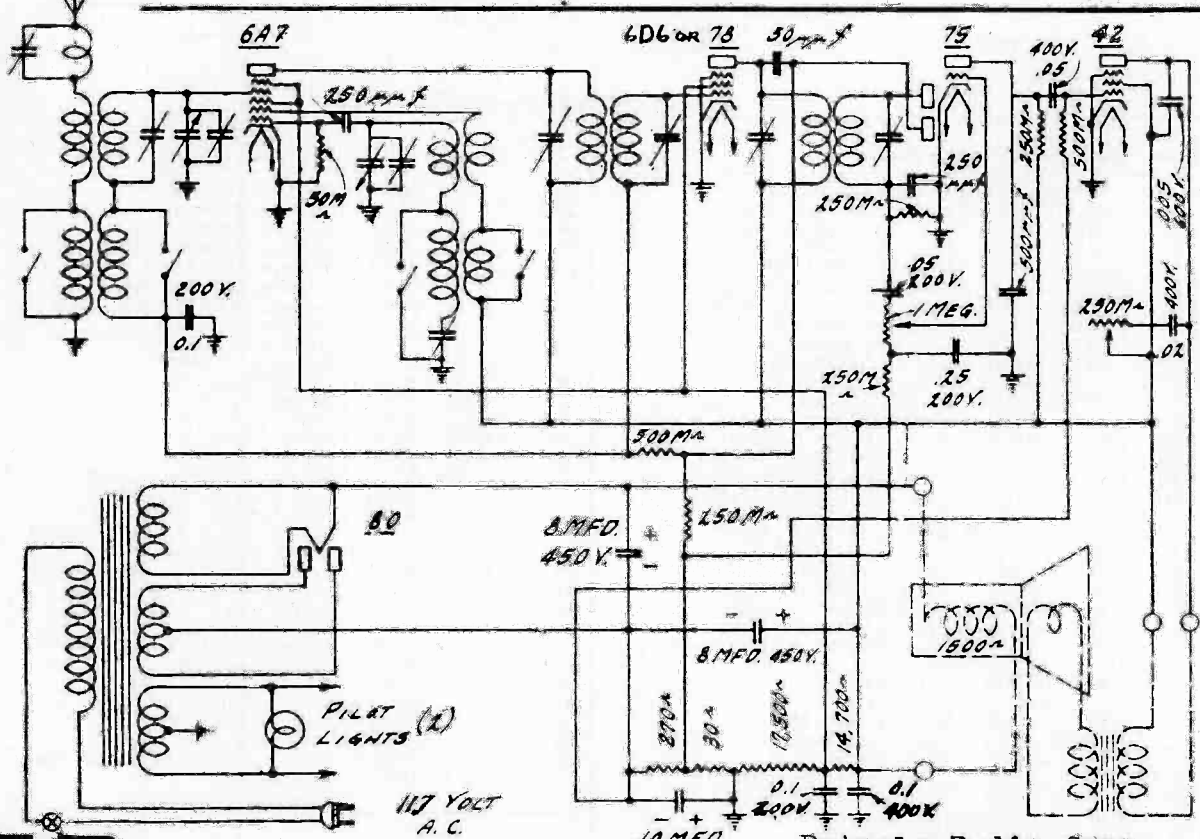

Detrola Radio Corp.
Model 5X

COMPILED BY M. N. BEITMAN, SUPREME PUBLICATIONS

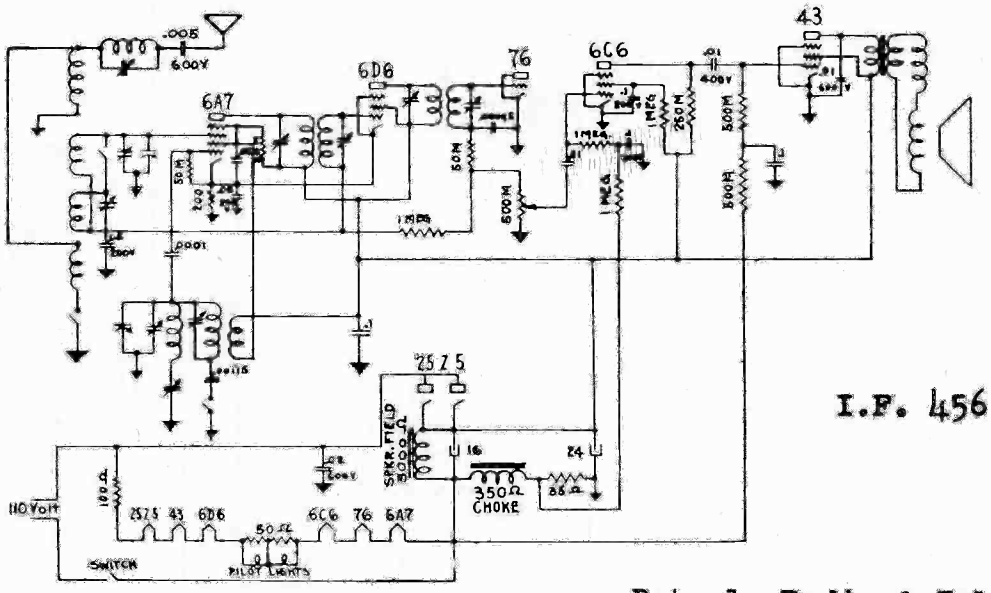

I.F. 456 KC.

MODEL 100A

Detrola Radio & Tel. Corp.

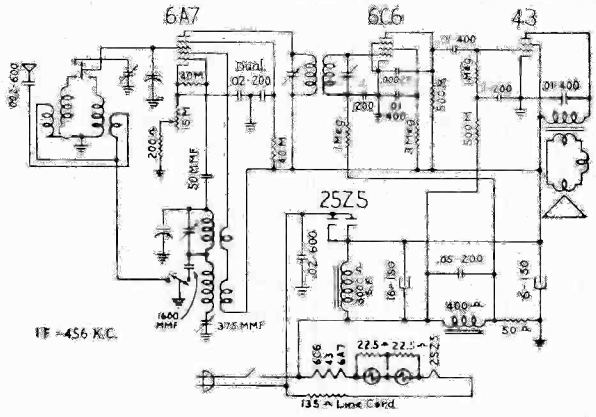

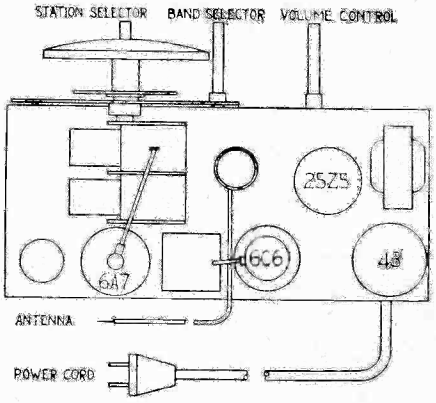

MODEL 134

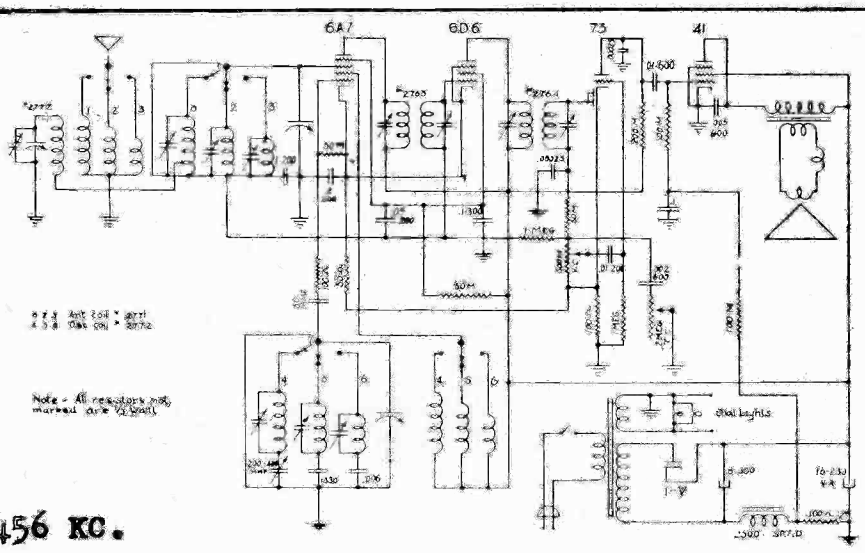

I.F. 456 KC.

MODEL 106

MANUAL OF MOST-OFTEN-NEEDED RADIO DIAGRAMS

MODELS 107 and 111

Chassis Model U6A

Emerson Radio

L1	456 kc adjustable wave-trap
L2	Filter choke—500 ohms
T1, T2, T3	Three-band antenna coil assembly
T4, T5, T6	Three-band oscillator coil assembly
T7	456 kc first i-f transformer
T8	456 kc second i-f transformer
R1, R8	50,000 ohm, ¼ watt carbon resistor
R2	500 ohm, ½ watt wire-wound resistor
R3, R7, R11	1 megohm, ¼ watt carbon resistor
R4	30,000 ohm, ¼ watt carbon resistor
R5, R17	10,000 ohm, ¼ watt carbon resistor
R6	850 ohm, ½ watt wire-wound resistor
R9, R13	100,000 ohm, ¼ watt carbon resistor
R10, S2	Volume control with line switch—0.5 megohms
R12	200,000 ohm, ¼ watt carbon resistor
R14	Tone control—0.25 megohms
R15, R16	500,000 ohm, ¼ watt carbon resistor
R18	5,000 ohm, ¼ watt carbon resistor
R19	Wire-wound ballast resistor—130 ohms
C1, C2	Two-gang variable condenser
C3, C4, C21, C22, C25	0.1 mf, 200 volt tubular condenser
C5	0.0001 mf mica condenser
C6, C7	Dual adjustable padding condenser C6—250 to 550 mmf. C7—800 to 1400 mmf.
C8, C9, C10, C11, C12, C13, C14	Seven-section condenser block C8—0.1 mf, 200 v. C12—0.1 mf, 200 v. C9—0.1 mf, 200 v. C13—0.1 mf, 200 v. C10—0.2 mf, 200 v. C14—0.1 mf, 200 v. C11—0.05 mf, 200 v.
C15	0.02 mf, 200 v. tubular condenser
C16, C20, C24	0.00025 mf mica condenser
C17, C18	0.01 mf, 200 v. tubular condenser
C19	0.006 mf, 200 v. tubular condenser
C23, C31	0.001 mf mica condenser
C26	0.25 mf, 200 v. tubular condenser
C27, C28, C29	4, 8 and 16 mf electrolytic filter condenser block C27—4 mf, 150 v. C29—16 mf, 150 v. C28—8 mf, 150 v.
C30	Tubular 4 mf, 150 v. electrolytic condenser
C32	0.005 mf mica condenser

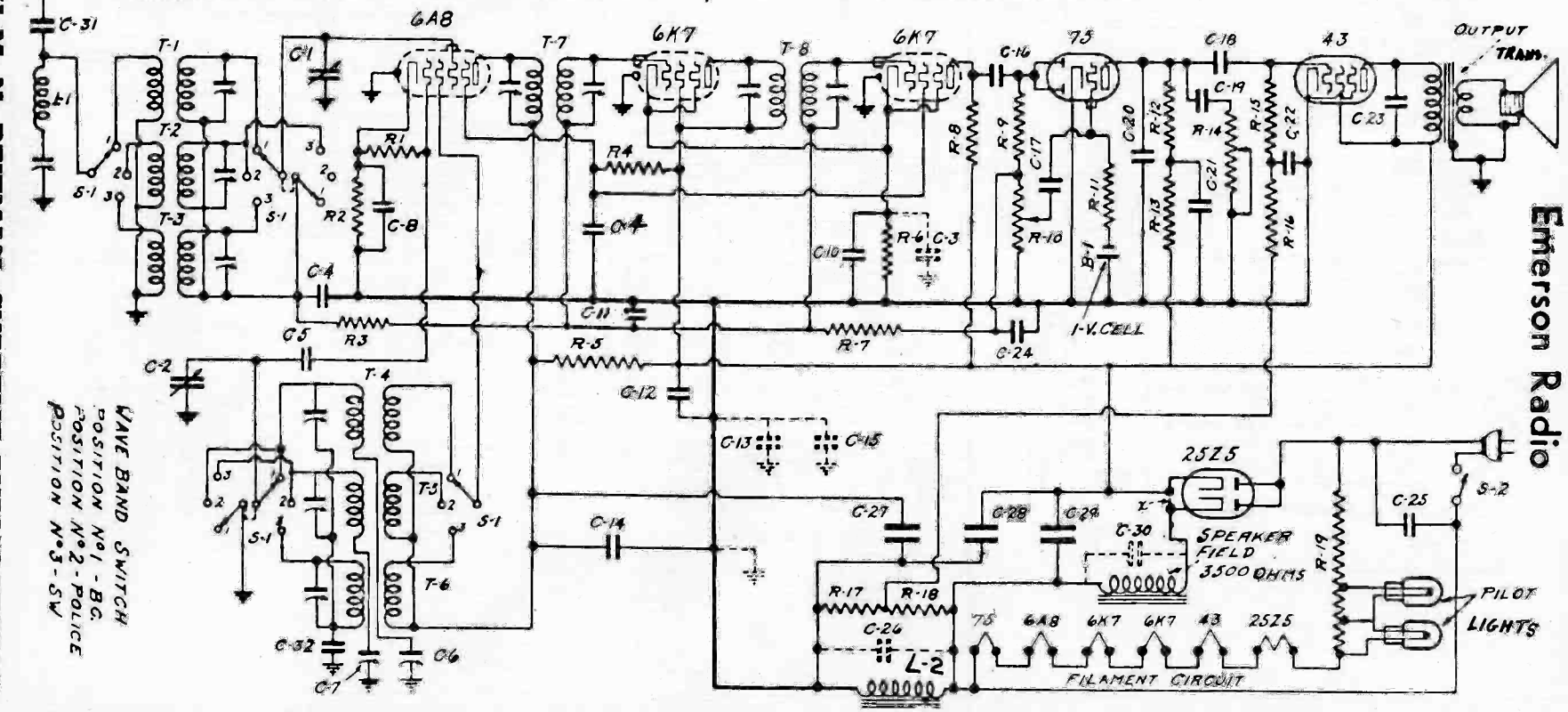

Thomas A. Edison, Inc.

Models: R6, R7

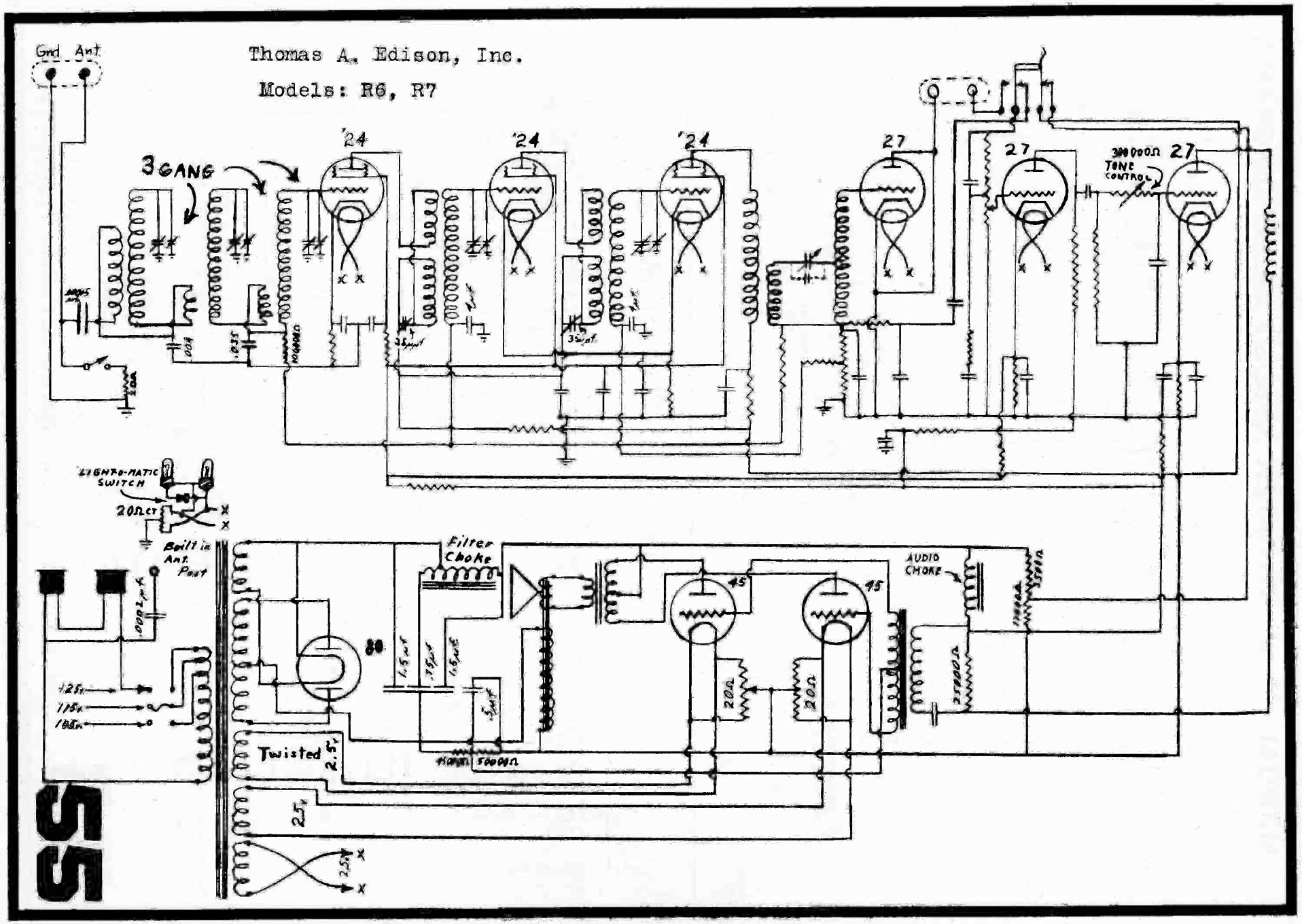

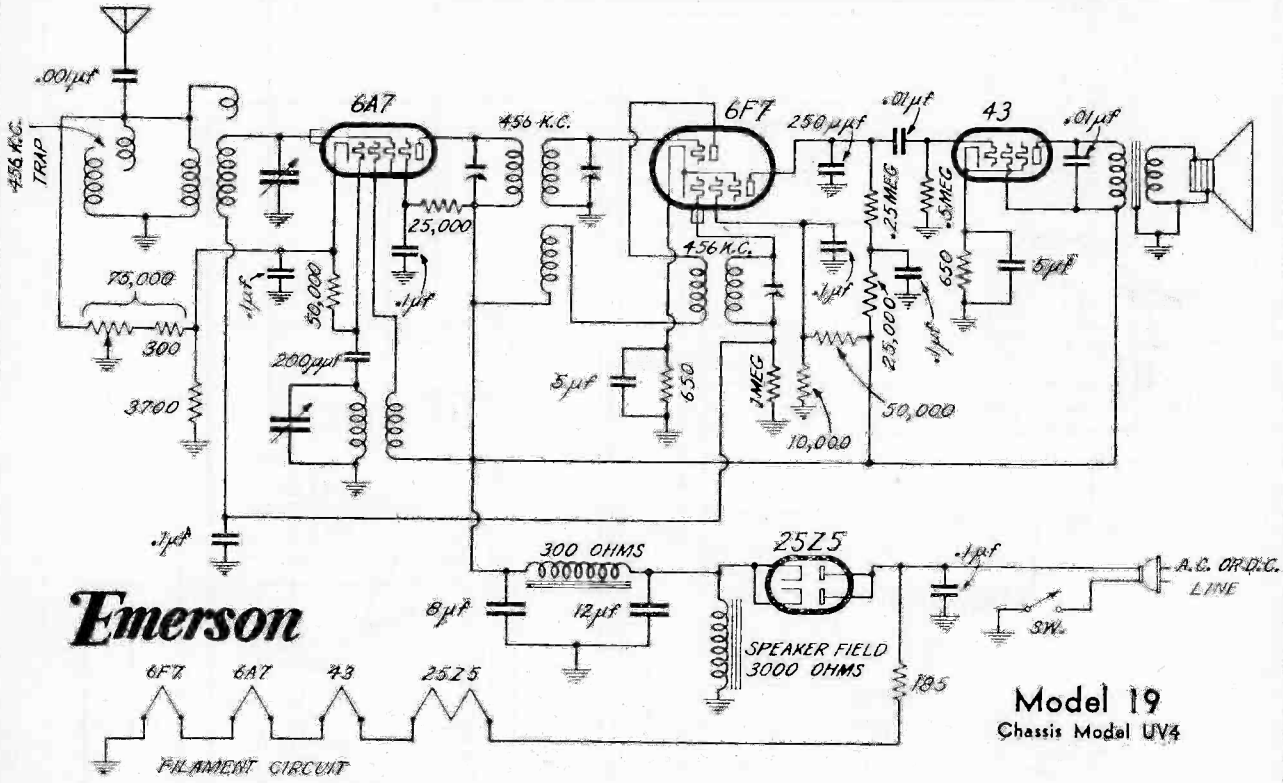

Emerson

Model 19

Chassis Model UV4

Emerson Radio and Phonograph Corp.

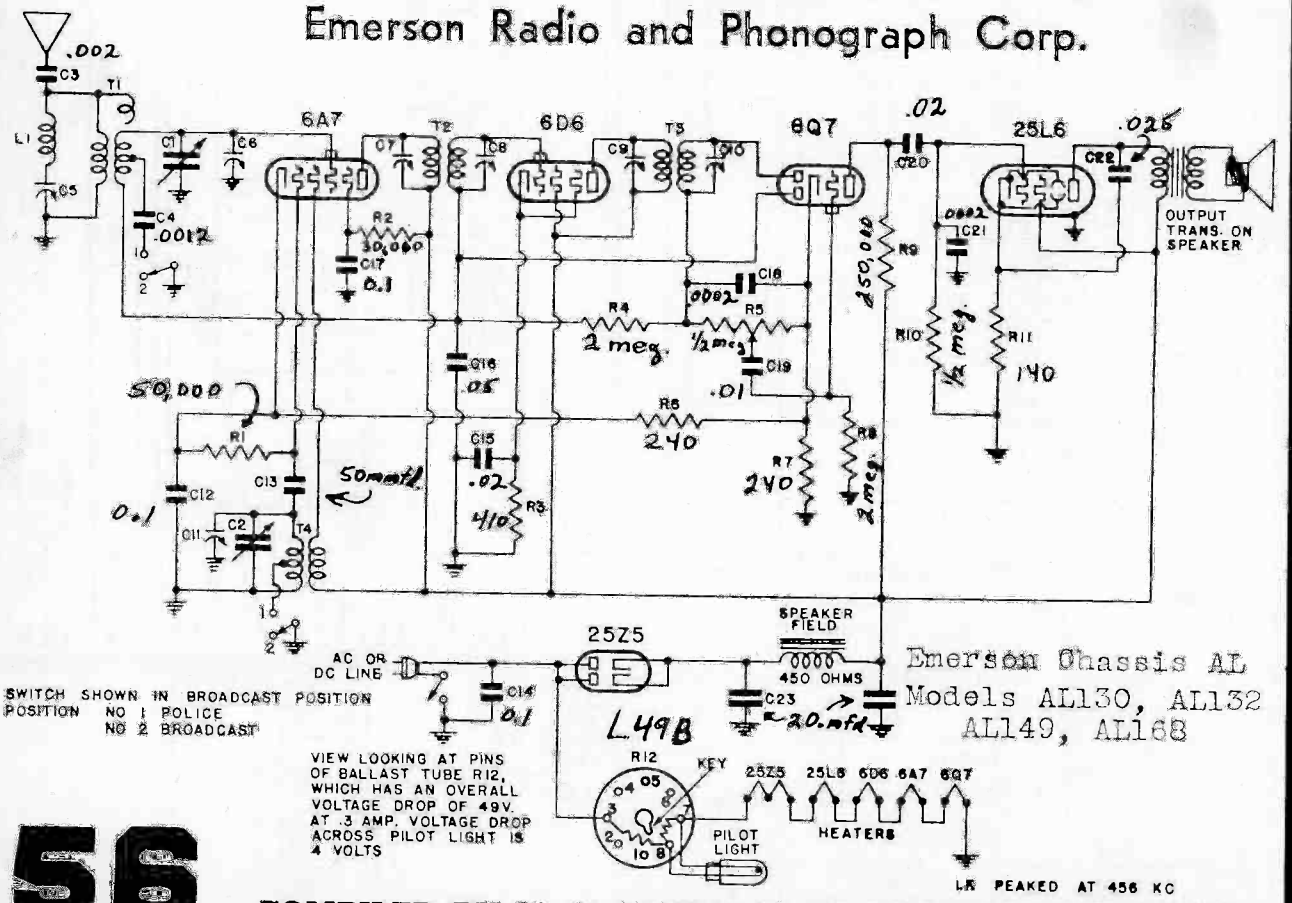

SWITCH SHOWN IN BROADCAST POSITION
POSITION NO 1 POLICE
NO 2 BROADCAST

VIEW LOOKING AT PINS OF BALLAST TUBE R12, WHICH HAS AN OVERALL VOLTAGE DROP OF 49V. AT .3 AMP. VOLTAGE DROP ACROSS PILOT LIGHT IS 4 VOLTS

Emerson Chassis AL
Models AL130, AL132
AL149, AL168

Emerson Radio and Phonograph Corp.

Models AD-108, 110, 125

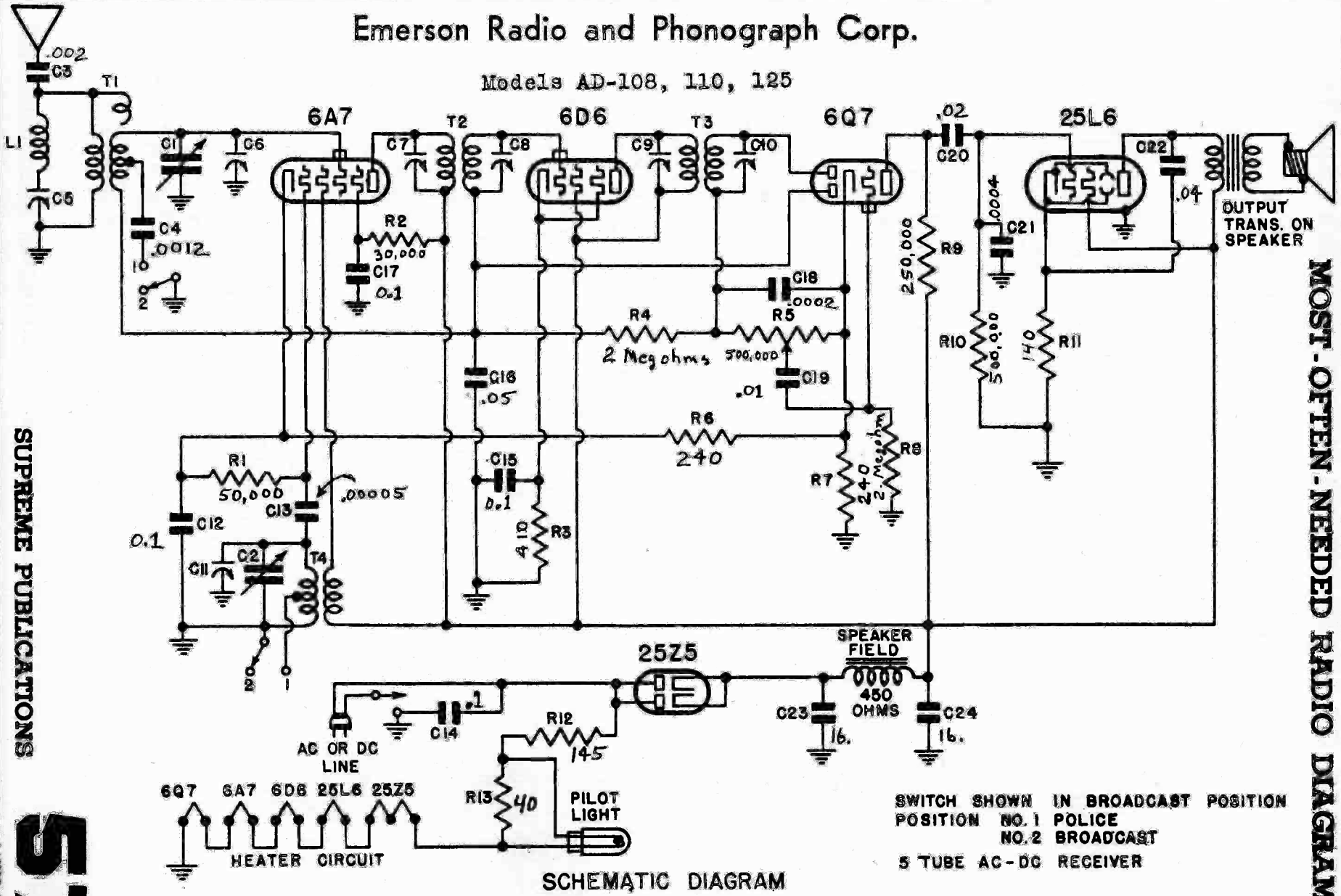

SCHEMATIC DIAGRAM

Fairbanks-Morse Radio, Chassis Model 9A

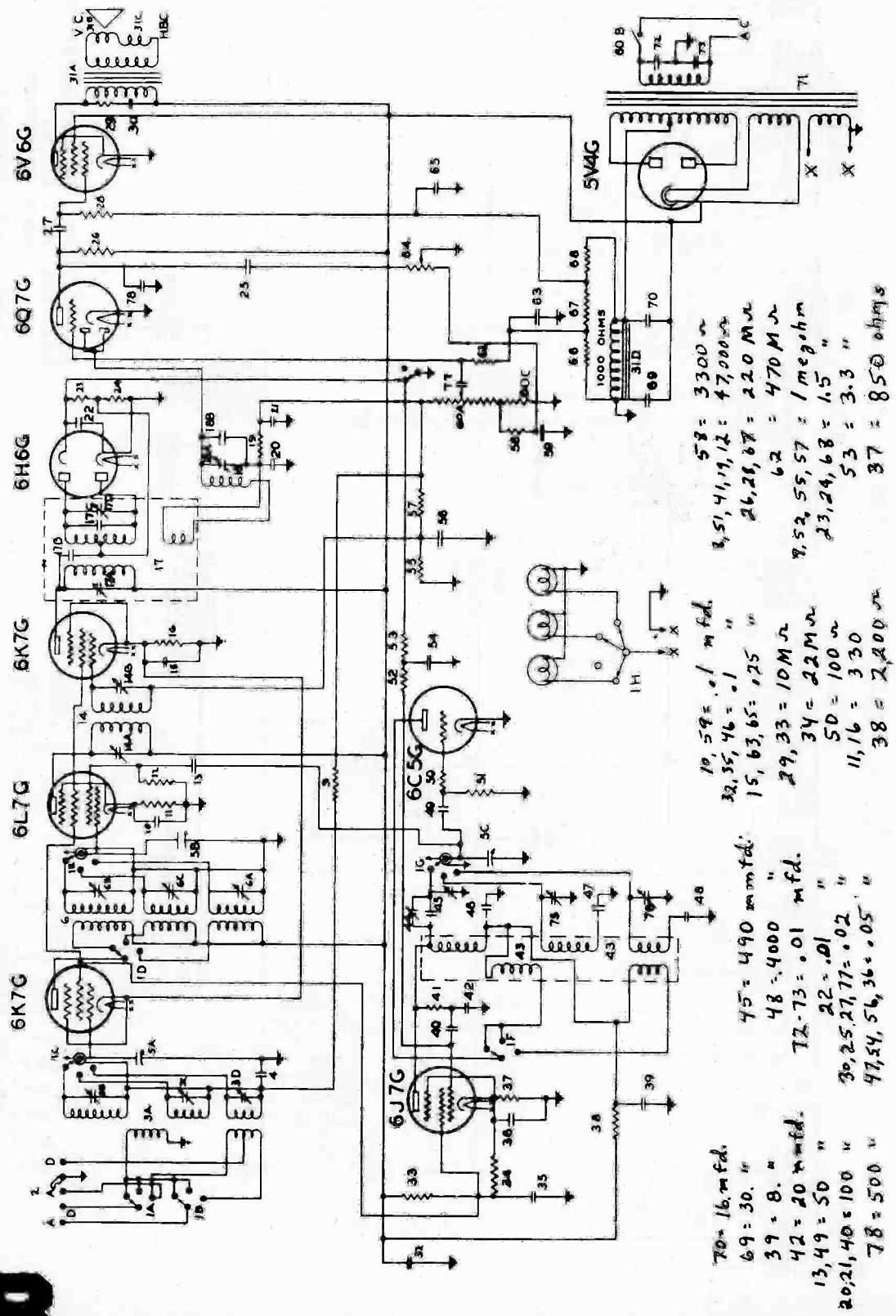

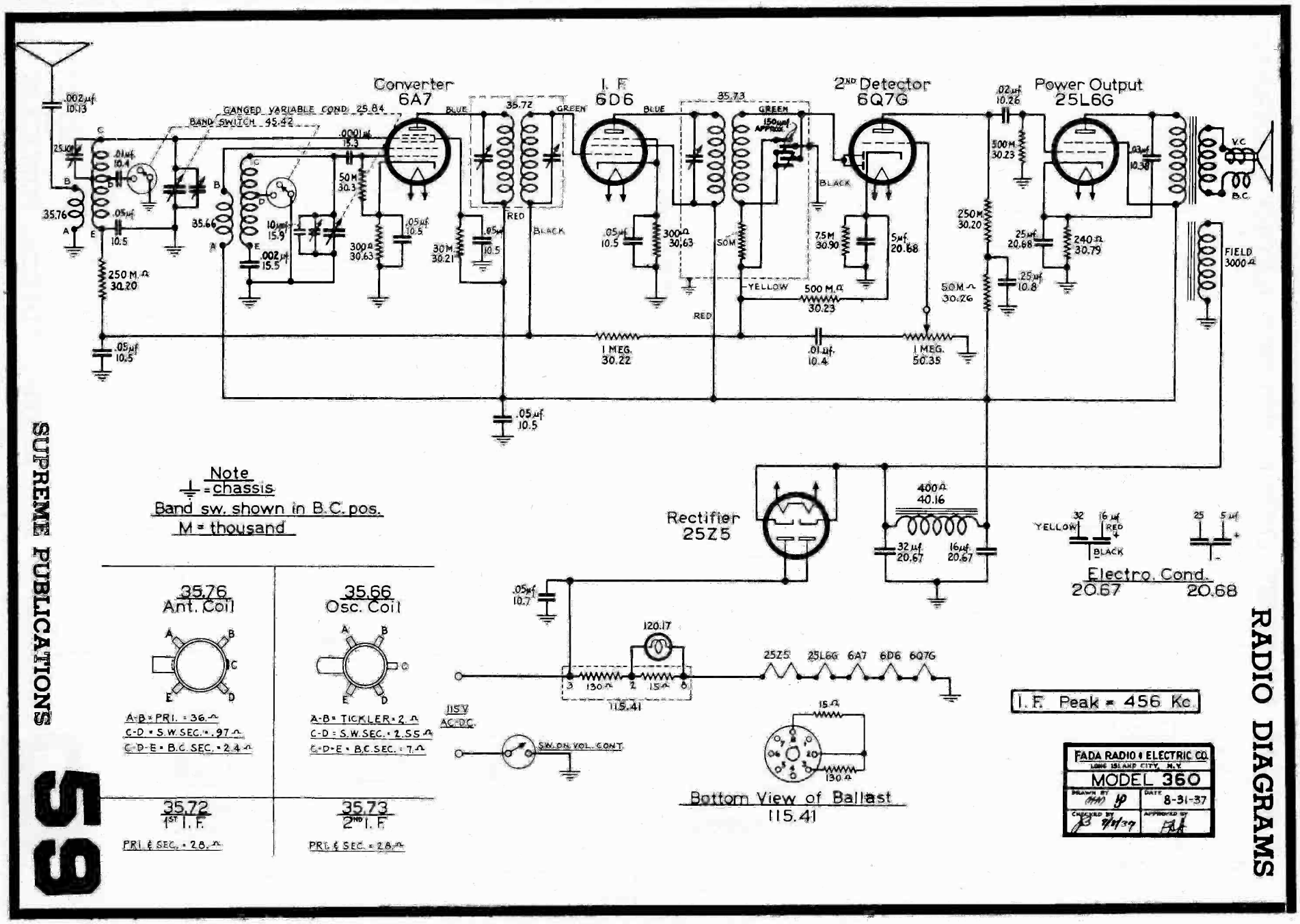

Note
⏚ = chassis
Band sw. shown in B.C. pos.
M = thousand

35.76
Ant. Coil

A-B = PRI. = 36.Ω
C-D = S.W. SEC. = .97 Ω
C-D-E = B.C. SEC. = 2.4 Ω

35.66
Osc. Coil

A-B = TICKLER = 2. Ω
C-D = S.W. SEC. = 2.55 Ω
C-D-E = B.C. SEC. = 7. Ω

35.72
1ST I. F.

PRI. & SEC. = 2.8 Ω

35.73
2ND I. F.

PRI. & SEC. = 2.8 Ω

MANUAL OF MOST-OFTEN-NEEDED RADIO DIAGRAMS

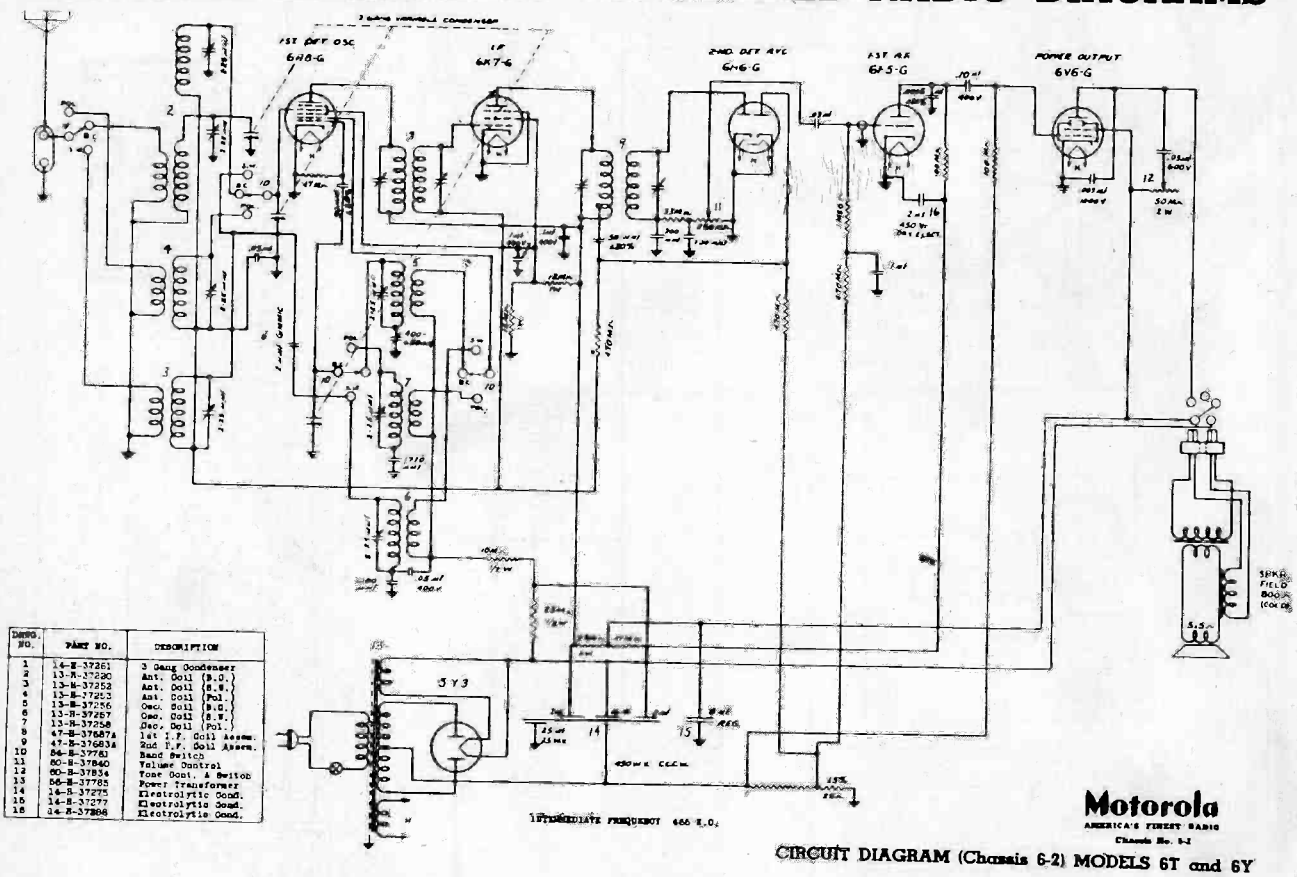

DWG. NO.	PART NO.	DESCRIPTION
1	14-R-37261	3 Gang Condenser
2	13-R-37220	Ant. Coil (B.C.)
3	13-R-37252	Ant. Coil (S.W.)
4	13-R-37253	Ant. Coil (Pol.)
5	13-R-37256	Osc. Coil (B.C.)
6	13-R-37257	Osc. Coil (S.W.)
7	13-R-37258	Osc. Coil (Pol.)
8	47-R-37687A	1st I.F. Coil Assem.
9	47-R-37683A	2nd I.F. Coil Assem.
10	54-R-37761	Band Switch
11	60-R-37840	Volume Control
12	60-R-37834	Tone Cont. & Switch
13	56-R-37785	Power Transformer
14	14-R-37275	Electrolytic Cond.
15	14-R-37277	Electrolytic Cond.
16	14-R-37288	Electrolytic Cond.

Motorola
AMERICA'S FINEST RADIO
Chassis No. 6-2

CIRCUIT DIAGRAM (Chassis 6-2) MODELS 6T and 6Y

CIRCUIT DIAGRAM (Chassis 5-2) MODELS 5T-1, 5T-2 and 5Y

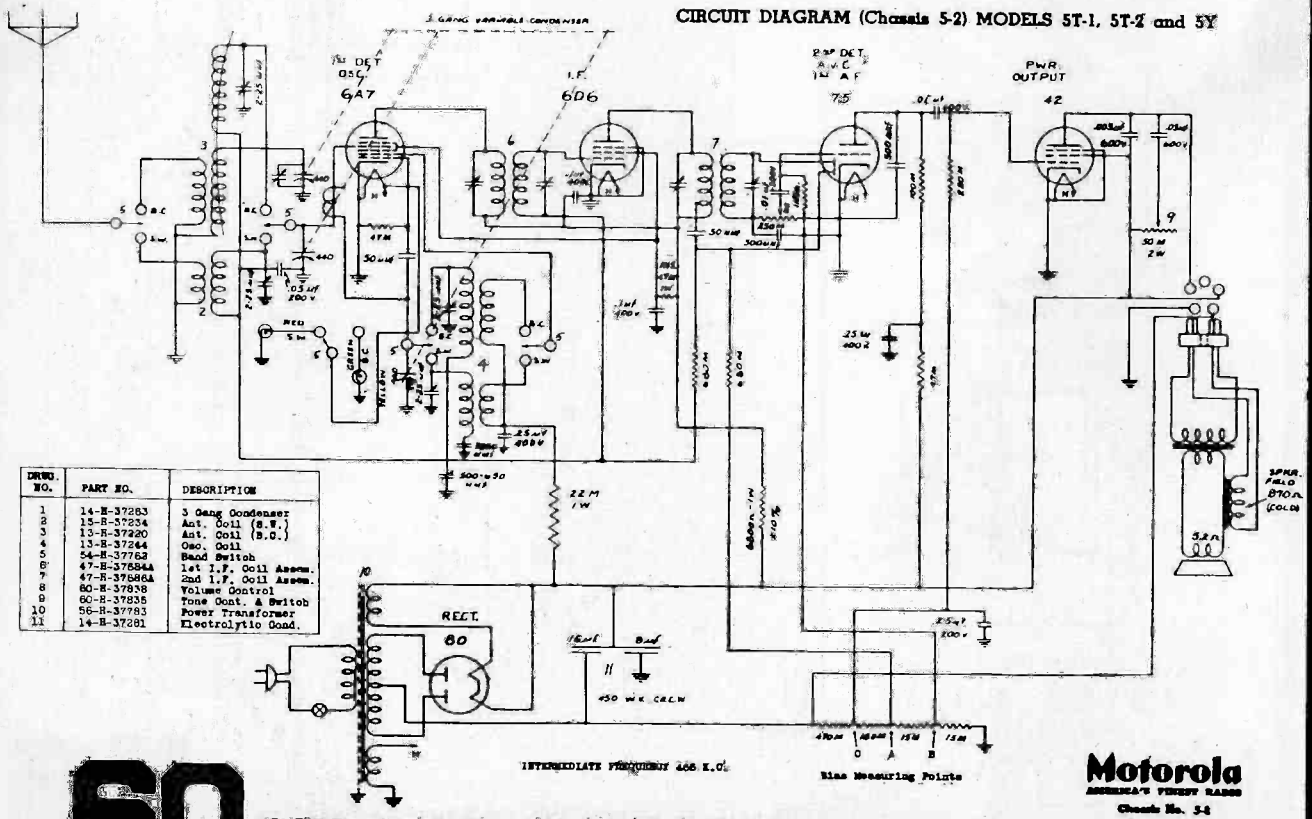

DWG. NO.	PART NO.	DESCRIPTION
1	14-R-37263	3 Gang Condenser
2	15-R-37234	Ant. Coil (S.W.)
3	13-R-37220	Ant. Coil (B.C.)
4	13-R-37244	Osc. Coil
5	54-R-37763	Band Switch
6	47-R-37684A	1st I.F. Coil Assem.
7	47-R-37686A	2nd I.F. Coil Assem.
8	60-R-37838	Volume Control
9	60-R-37835	Tone Cont. & Switch
10	56-R-37783	Power Transformer
11	14-R-37281	Electrolytic Cond.

Motorola
AMERICA'S FINEST RADIO
Chassis No. 5-2

60 COMPILED BY M. N. BEITMAN, SUPREME PUBLICATIONS

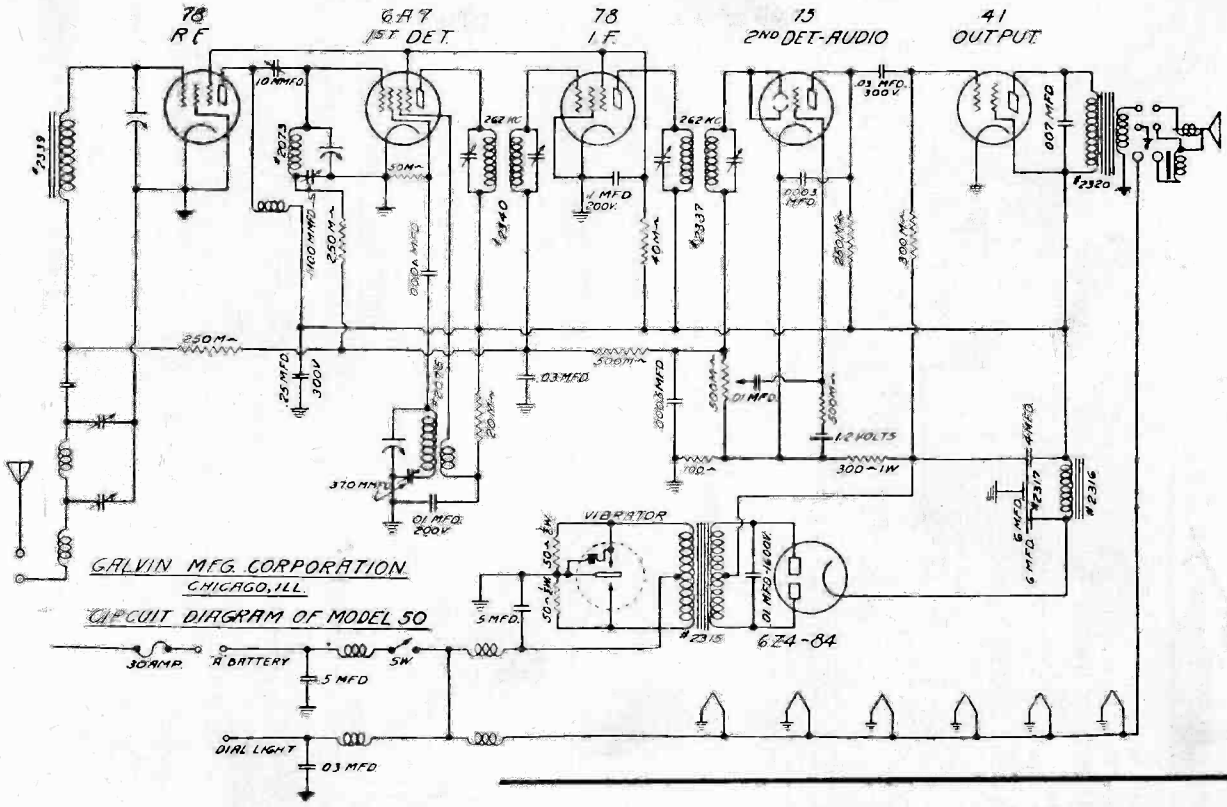
78
R.F.
6A7
1ST DET.
78
I.F.
75
2ND DET.-AUDIO
41
OUTPUT
VIBRATOR
6Z4-84
GALVIN MFG. CORPORATION
CHICAGO, ILL.
CIRCUIT DIAGRAM OF MODEL 50
30 AMP.
"A" BATTERY
SW.
DIAL LIGHT

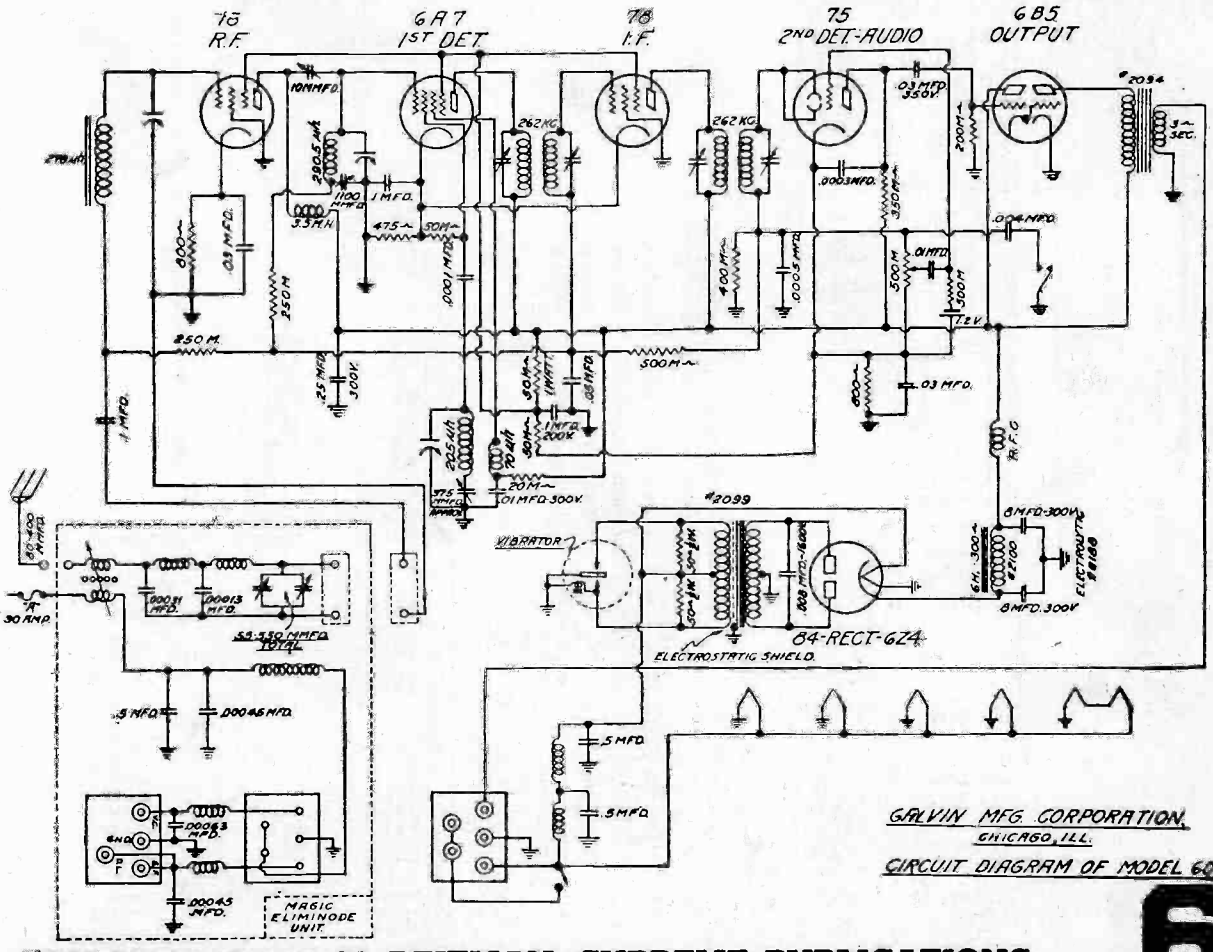
78
R.F.
6A7
1ST DET.
78
I.F.
75
2ND DET.-AUDIO
6B5
OUTPUT
VIBRATOR
84-RECT-6Z4
ELECTROSTATIC SHIELD
"A"
30 AMP.
MAGIC ELIMINODE UNIT
GALVIN MFG. CORPORATION
CHICAGO, ILL.
CIRCUIT DIAGRAM OF MODEL 60

Radio Receiver, Model F-40 **General Electric Co.**

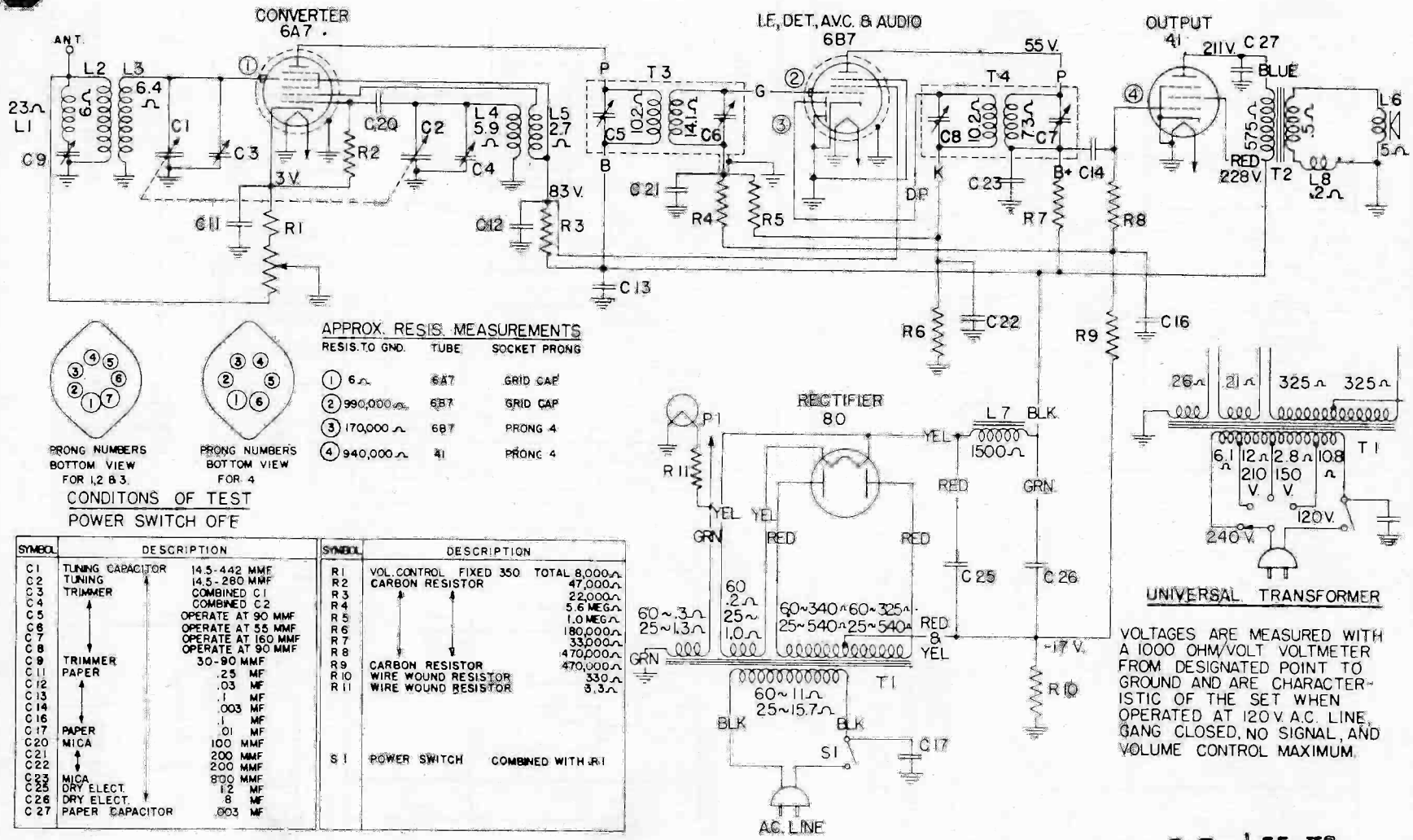

PRONG NUMBERS BOTTOM VIEW FOR 1,2 & 3.

PRONG NUMBERS BOTTOM VIEW FOR 4

APPROX. RESIS. MEASUREMENTS

RESIS. TO GND.	TUBE	SOCKET PRONG
(1) 6 Ω	6A7	GRID CAP
(2) 990,000 Ω	6B7	GRID CAP
(3) 170,000 Ω	6B7	PRONG 4
(4) 940,000 Ω	41	PRONG 4

CONDITONS OF TEST
POWER SWITCH OFF

SYMBOL	DESCRIPTION	
C1	TUNING CAPACITOR	14.5-442 MMF
C2	TUNING	14.5-280 MMF
C3	TRIMMER	COMBINED C1
C4		COMBINED C2
C5		OPERATE AT 90 MMF
C6		OPERATE AT 55 MMF
C7		OPERATE AT 160 MMF
C8		OPERATE AT 90 MMF
C9	TRIMMER	30-90 MMF
C11	PAPER	.25 MF
C12		.03 MF
C13		.1 MF
C14		.003 MF
C16		.1 MF
C17	PAPER	.01 MF
C20	MICA	100 MMF
C21		200 MMF
C22		200 MMF
C23	MICA	800 MMF
C25	DRY ELECT.	12 MF
C26	DRY ELECT.	8 MF
C27	PAPER CAPACITOR	.003 MF

SYMBOL	DESCRIPTION	
R1	VOL. CONTROL FIXED 350	TOTAL 8,000 Ω
R2	CARBON RESISTOR	47,000 Ω
R3		22,000 Ω
R4		5.6 MEG. Ω
R5		1.0 MEG. Ω
R6		180,000 Ω
R7		33,000 Ω
R8		470,000 Ω
R9	CARBON RESISTOR	470,000 Ω
R10	WIRE WOUND RESISTOR	330 Ω
R11	WIRE WOUND RESISTOR	3.3 Ω
S1	POWER SWITCH	COMBINED WITH R1

UNIVERSAL TRANSFORMER

VOLTAGES ARE MEASURED WITH A 1000 OHM/VOLT VOLTMETER FROM DESIGNATED POINT TO GROUND AND ARE CHARACTERISTIC OF THE SET WHEN OPERATED AT 120 V. A.C. LINE, GANG CLOSED, NO SIGNAL, AND VOLUME CONTROL MAXIMUM.

I.F. 455 KC.

Radio Receivers, Models A-63 and A-65 **General Electric Co.**

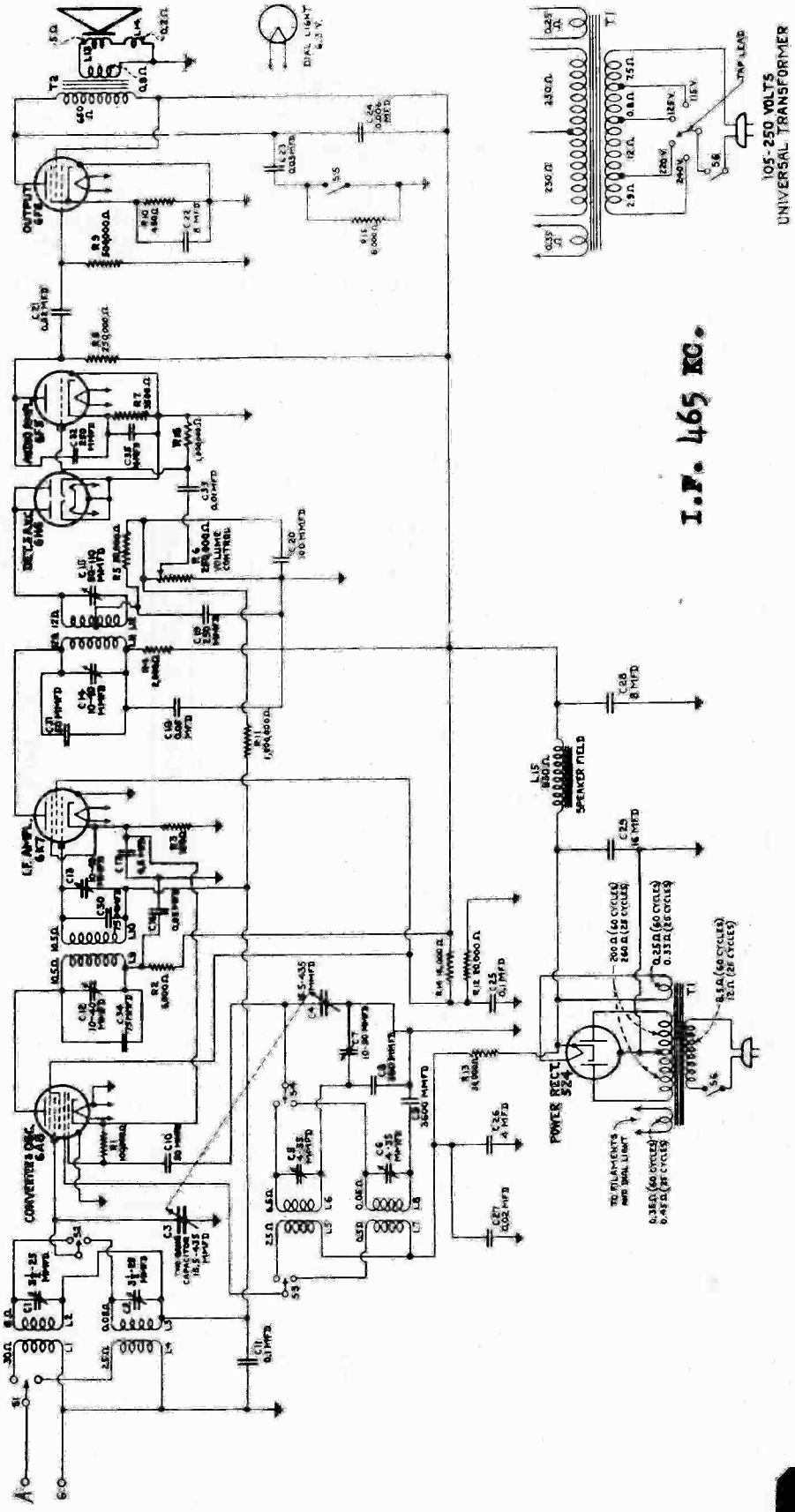

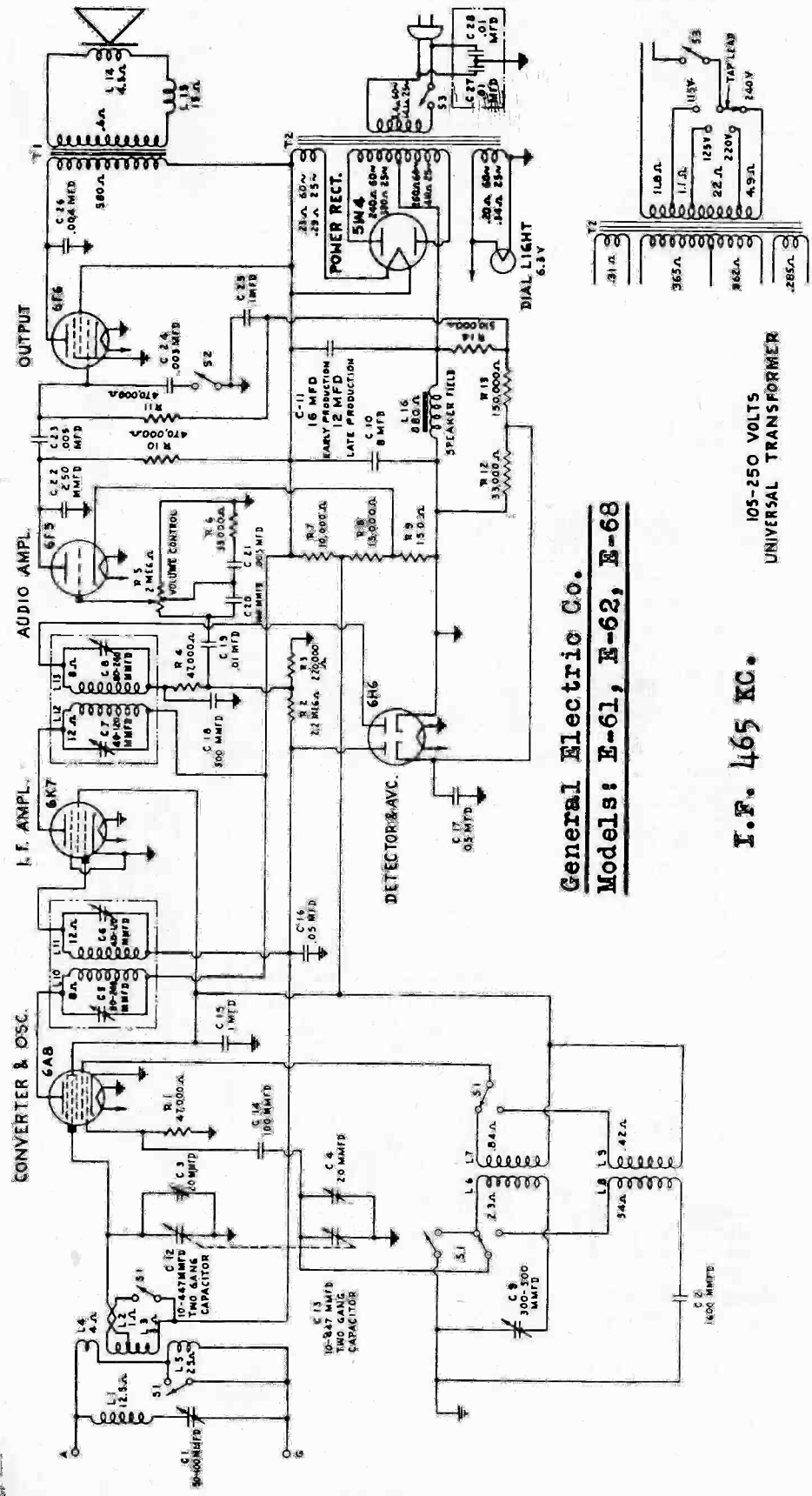

General Electric Co.

Models: E-61, E-62, E-68

I.F. 465 KC.

General Electric

Radio Receivers, Models E-61, E-62, and E-68

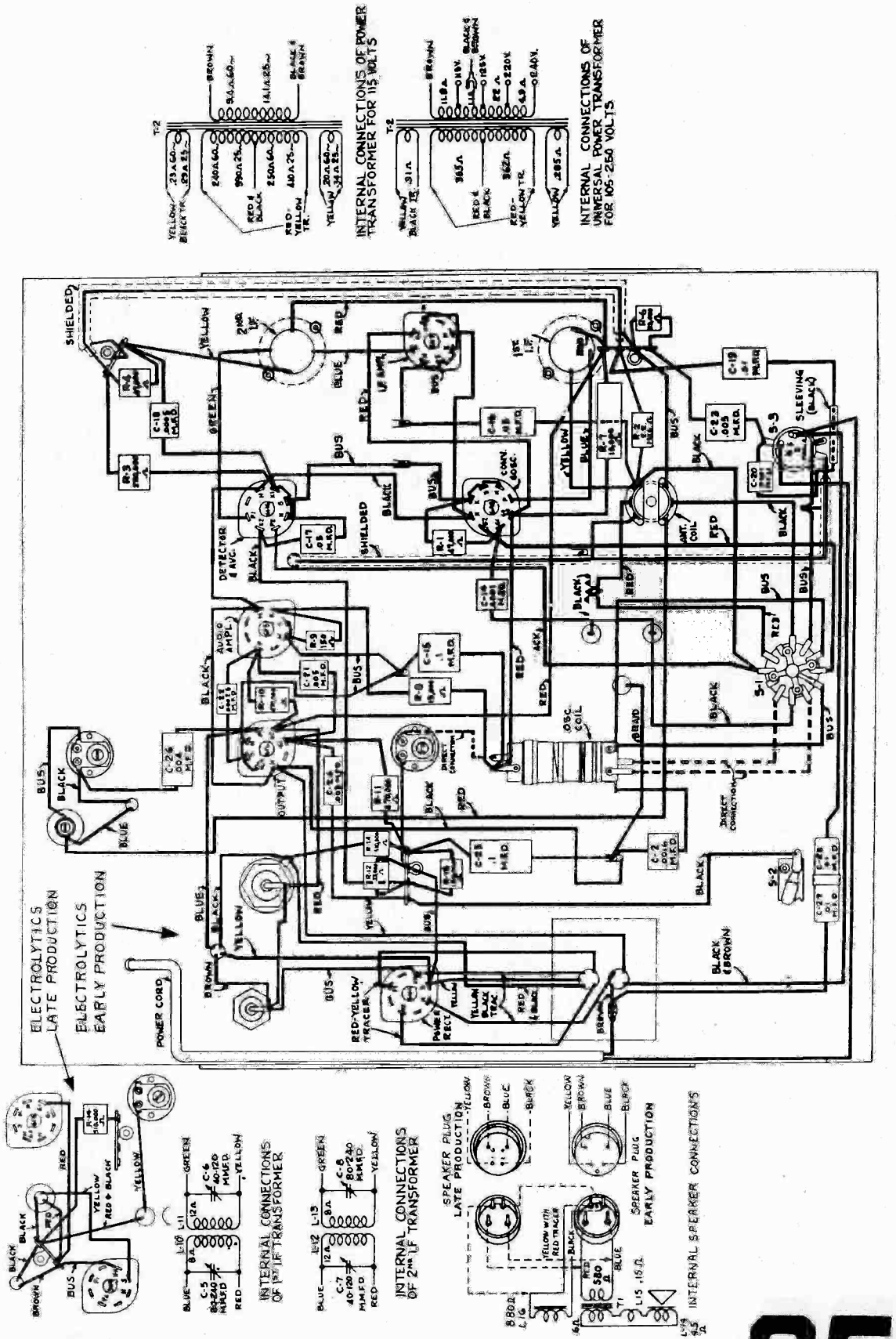

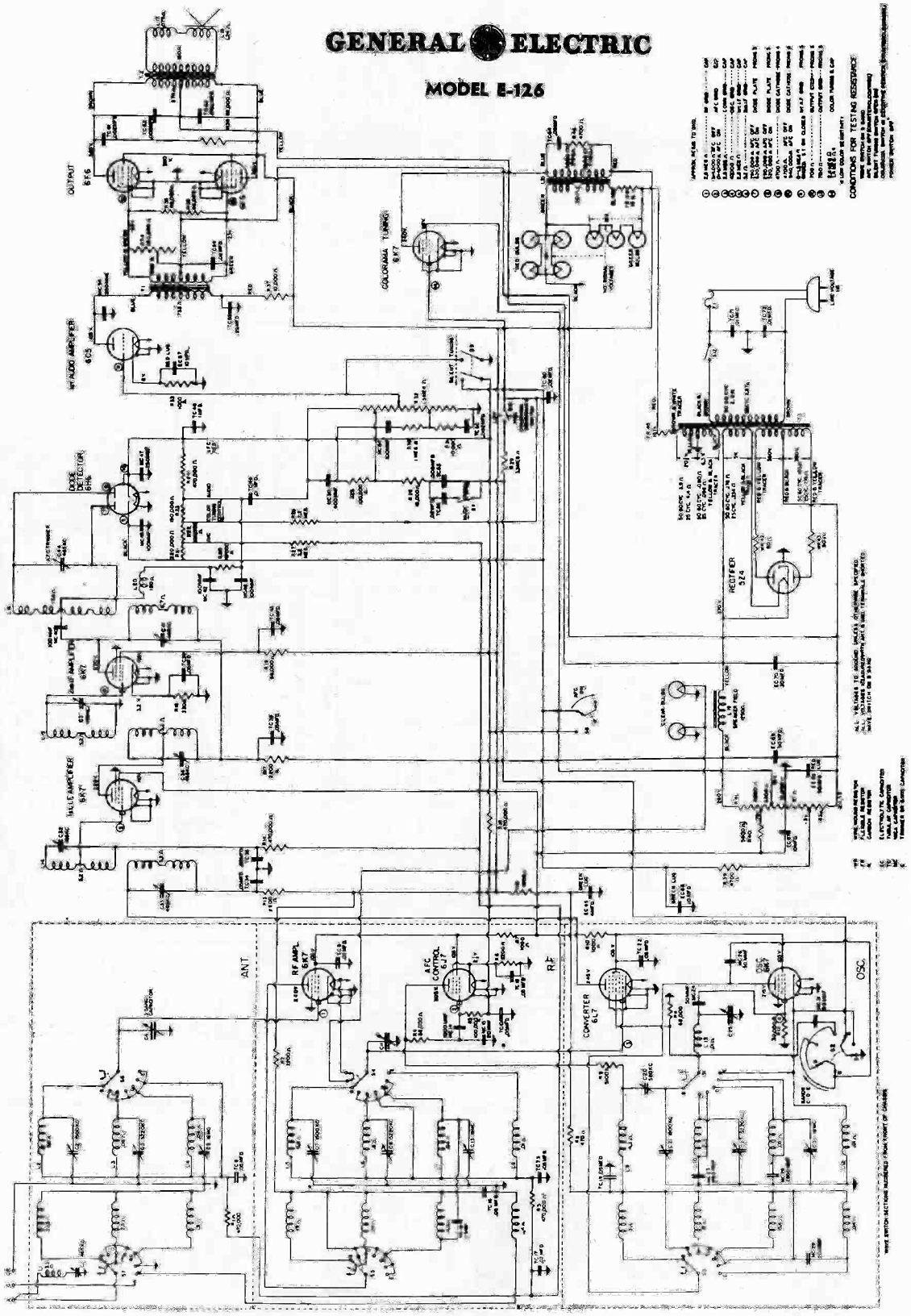
GENERAL ELECTRIC
MODEL E-126
OUTPUT
6F6
HF AUDIO AMPLIFIER
6C5
DIODE DETECTOR
6H6
IF AMPLIFIER
6K7
1st AUDIO AMPLIFIER
6K7
COLORAMA TUNING
6K7
RECTIFIER
5Z4
ANT
RF AMPL.
6K7
AFC CONTROL
6L7
RF
CONVERTER
6L7
OSC.
6K7
OSC.
CONDITIONS FOR TESTING RESISTANCE

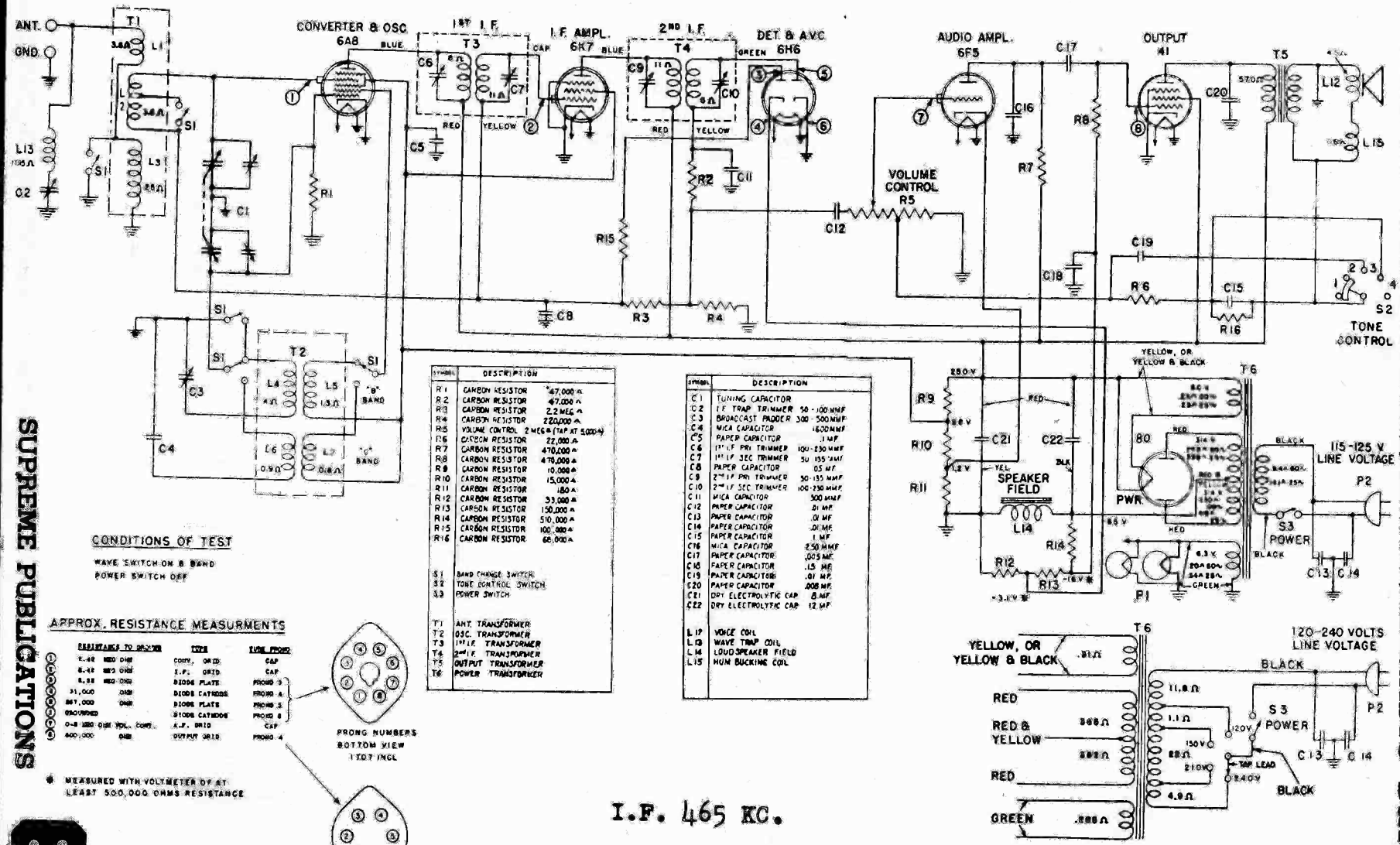

SYMBOL	DESCRIPTION	
R1	CARBON RESISTOR	*47,000 Ω
R2	CARBON RESISTOR	47,000 Ω
R3	CARBON RESISTOR	2.2 MEG Ω
R4	CARBON RESISTOR	220,000 Ω
R5	VOLUME CONTROL	2 MEG Ω (TAP AT 5,000 Ω)
R6	CARBON RESISTOR	22,000 Ω
R7	CARBON RESISTOR	470,000 Ω
R8	CARBON RESISTOR	470,000 Ω
R9	CARBON RESISTOR	10,000 Ω
R10	CARBON RESISTOR	15,000 Ω
R11	CARBON RESISTOR	180 Ω
R12	CARBON RESISTOR	33,000 Ω
R13	CARBON RESISTOR	150,000 Ω
R14	CARBON RESISTOR	510,000 Ω
R15	CARBON RESISTOR	100,000 Ω
R16	CARBON RESISTOR	68,000 Ω
S1	BAND CHANGE SWITCH	
S2	TONE CONTROL SWITCH	
S3	POWER SWITCH	
T1	ANT. TRANSFORMER	
T2	OSC. TRANSFORMER	
T3	1ST I.F. TRANSFORMER	
T4	2ND I.F. TRANSFORMER	
T5	OUTPUT TRANSFORMER	
T6	POWER TRANSFORMER	

SYMBOL	DESCRIPTION	
C1	TUNING CAPACITOR	
C2	I.F. TRAP TRIMMER	50 - 100 MMF
C3	BROADCAST PADDER	300 - 500 MMF
C4	MICA CAPACITOR	1600 MMF
C5	PAPER CAPACITOR	.1 MF
C6	1ST I.F. PRI. TRIMMER	100 - 230 MMF
C7	1ST I.F. SEC. TRIMMER	50 - 155 MMF
C8	PAPER CAPACITOR	.05 MF
C9	2ND I.F. PRI. TRIMMER	50 - 135 MMF
C10	2ND I.F. SEC. TRIMMER	100 - 230 MMF
C11	MICA CAPACITOR	300 MMF
C12	PAPER CAPACITOR	.01 MF
C13	PAPER CAPACITOR	.01 MF
C14	PAPER CAPACITOR	.01 MF
C15	PAPER CAPACITOR	.1 MF
C16	MICA CAPACITOR	250 MMF
C17	PAPER CAPACITOR	.005 MF
C18	PAPER CAPACITOR	.15 MF
C19	PAPER CAPACITOR	.01 MF
C20	PAPER CAPACITOR	.008 MF
C21	DRY ELECTROLYTIC CAP	8 MF
C22	DRY ELECTROLYTIC CAP	12 MF
L12	VOICE COIL	
L13	WAVE TRAP COIL	
L14	LOUDSPEAKER FIELD	
L15	HUM BUCKING COIL	

CONDITIONS OF TEST

WAVE SWITCH ON B BAND
POWER SWITCH OFF

APPROX. RESISTANCE MEASURMENTS

RESISTANCE TO GROUND		TYPE	TUBE PRONG
2.48	MEG OHM	CONV. GRID	CAP
8.48	MEG OHM	I.F. GRID	CAP
8.98	MEG OHM	DIODE PLATE	PRONG 5
31,000	OHM	DIODE CATHODE	PRONG 4
867,000	OHM	DIODE PLATE	PRONG 3
GROUNDED		DIODE CATHODE	PRONG 6
0-8	1000 OHM	VOL. CONT. A.F. GRID	CAP
600,000	OHM	OUTPUT GRID	PRONG 4

* MEASURED WITH VOLTMETER OF AT LEAST 500,000 OHMS RESISTANCE

I.F. 465 KC.

Tuning Frequency Range

Band "A"	140–410 kc
Band "B"	540–1750 kc
Band "C"	1.75–6.0 mc (1750–6000 kc)
Band "D"	6.0–19.5 mc (6000–19,500 kc)

Tubes

R. F. Amplifier.....6K7 Triple-grid Super-control Amplifier
Converter and
Oscillator.....6A8 Pentagrid Converter
I. F. Amplifier.....6K7 Triple-grid Super-control Amplifier
Detector and AVC..6H6 Twin Diode
Audio Amplifier....6C5 Detector Amplifier Triode
Output.....Two 6F6 Power Amplifier Pentodes (Push-pull)
Power Rectifier.....5Z4 Full-wave Rectifier
Dial Lamps.....MAZDA No. 46

I.F. 465 KC.

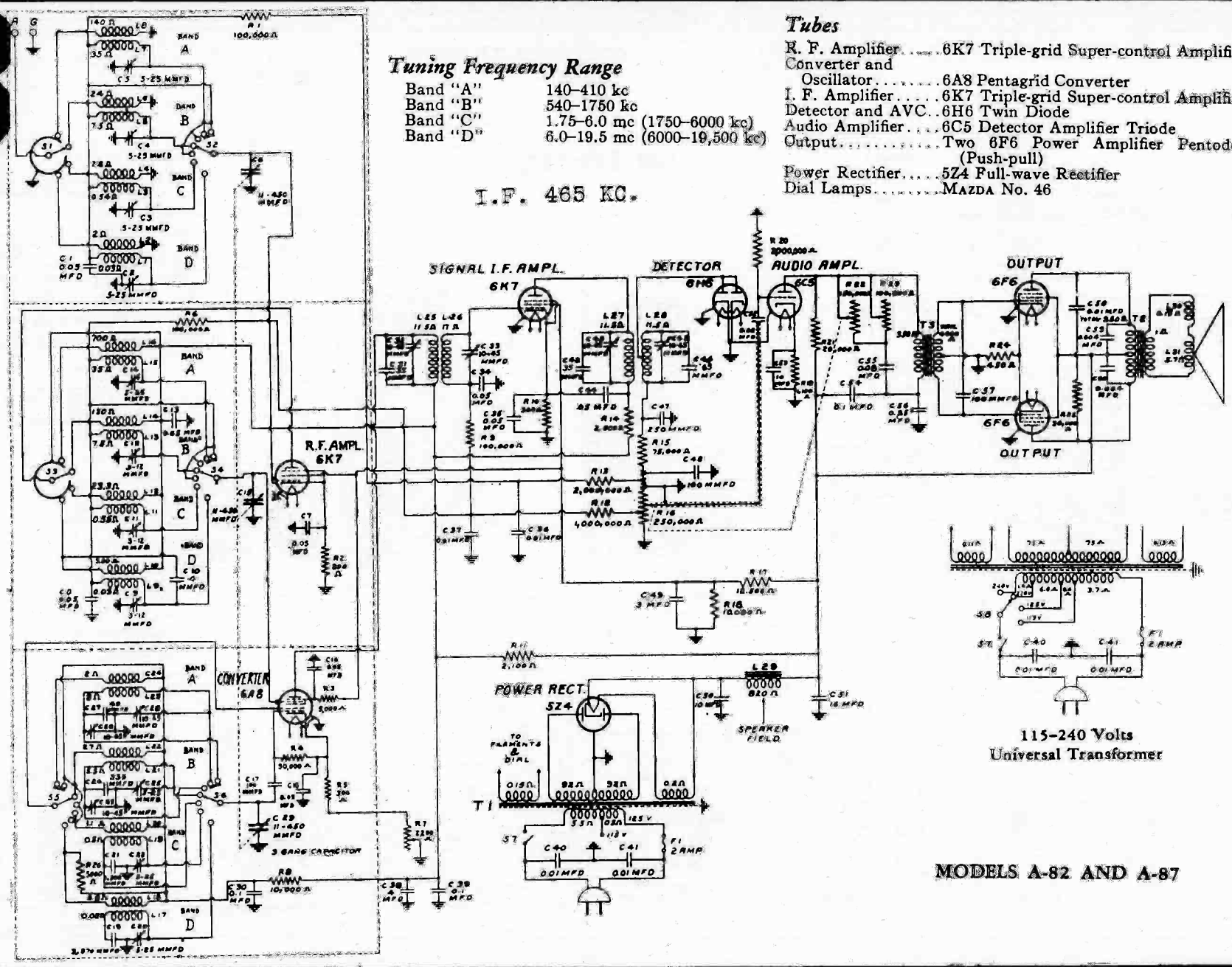

MODELS A-82 AND A-87

General Electric Co.

Radio Receivers, Models E-81 and E-86

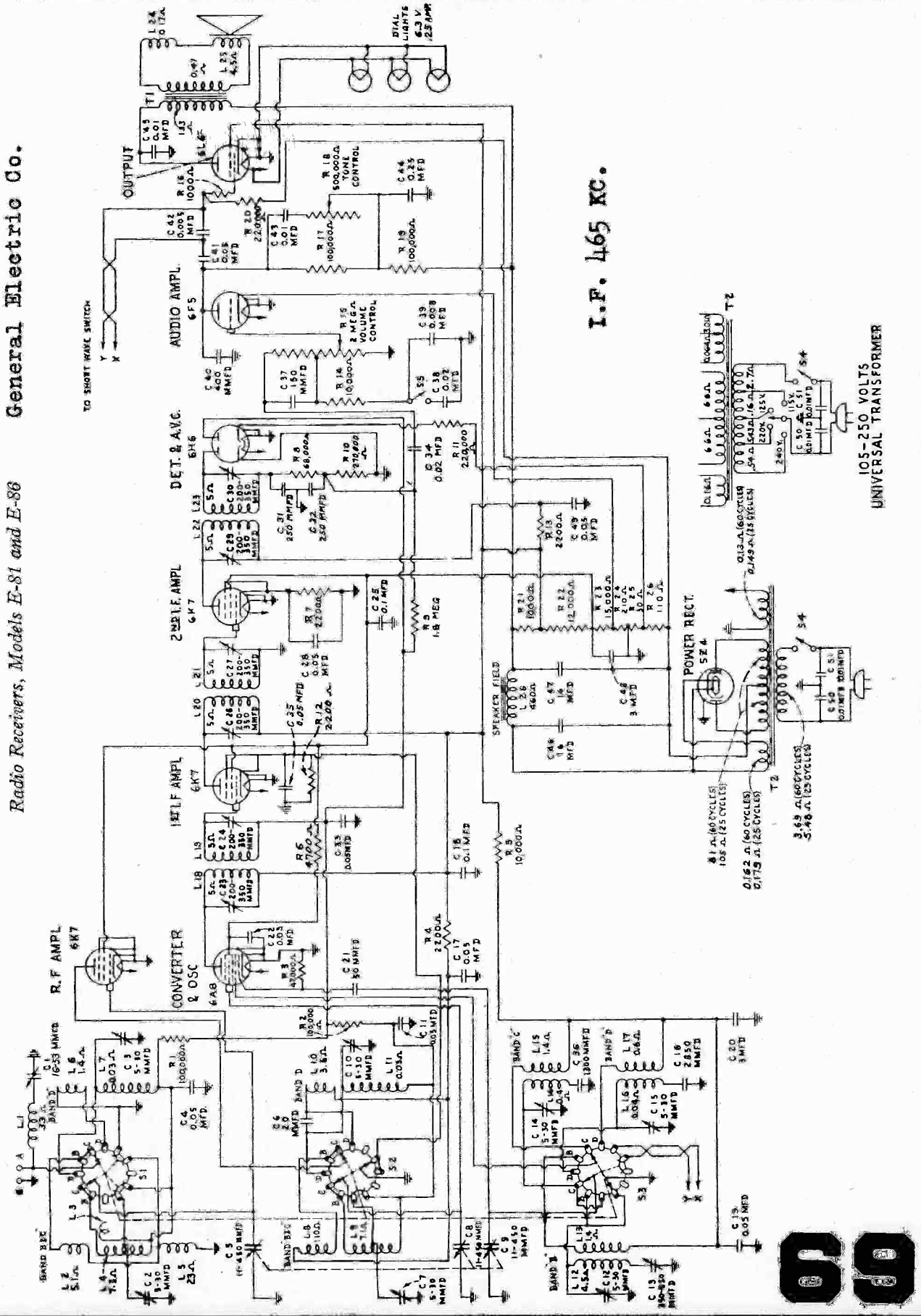

General Electric Co. Models: A-83, A-85

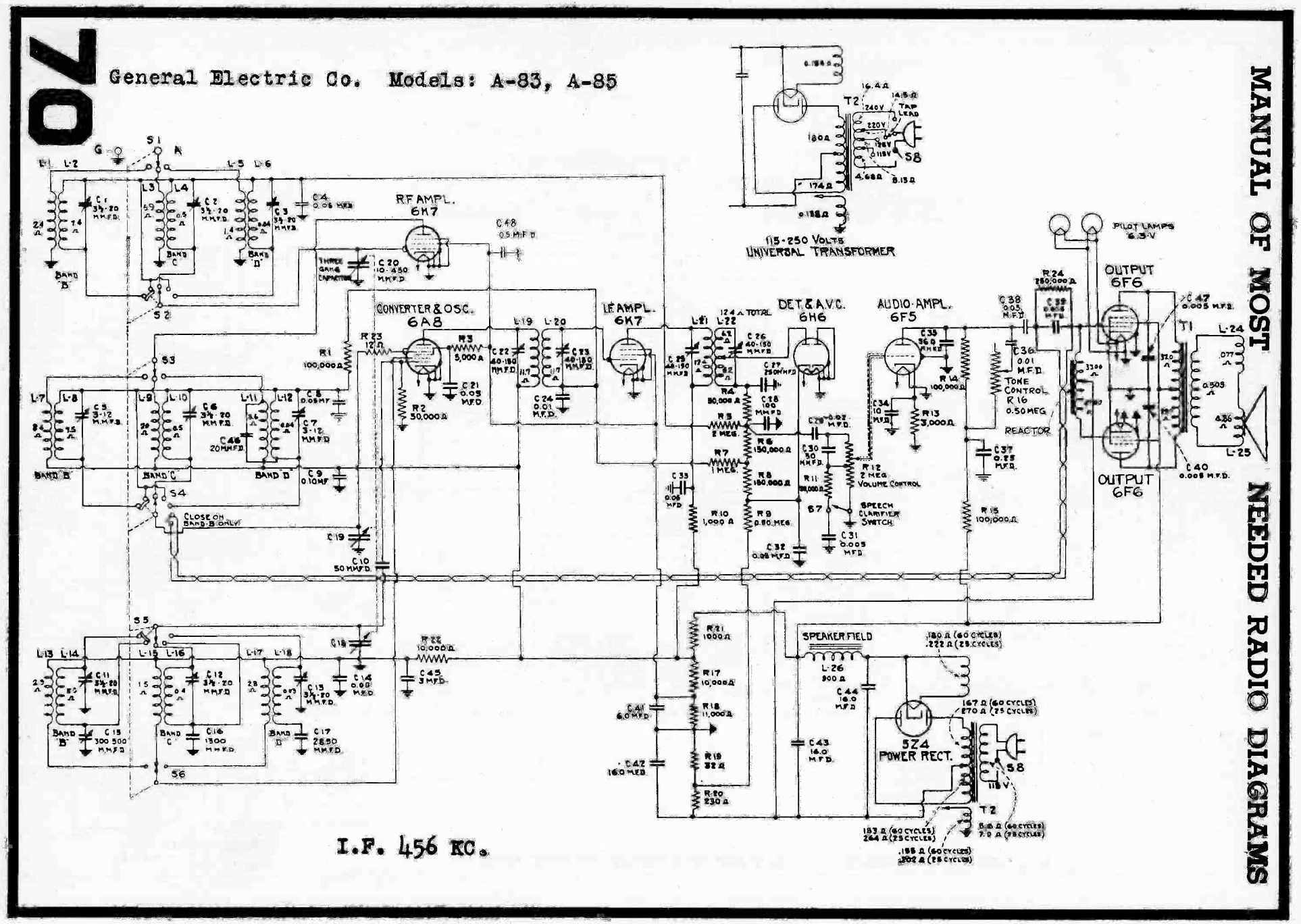

GENERAL ELECTRIC

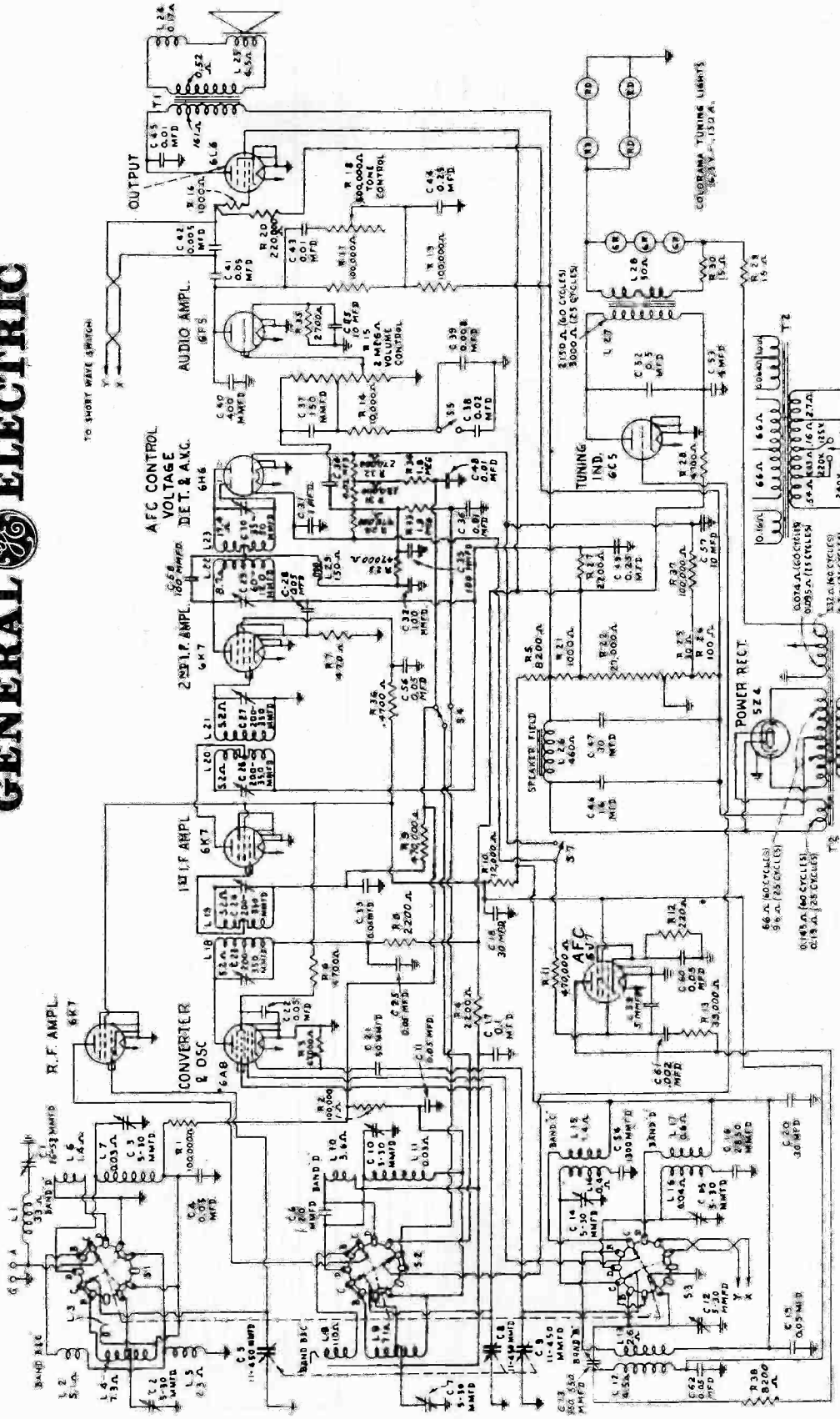

Radio Receivers, Models E-101, E-105 and E-106

ALIGNMENT FREQUENCIES

I.F.	Band "B"	Band "C"	Band "D"	Wave Trap
465 kc.	580 kc.	5220 kc.	18,000 kc.	465 kc.
	1500 kc.			

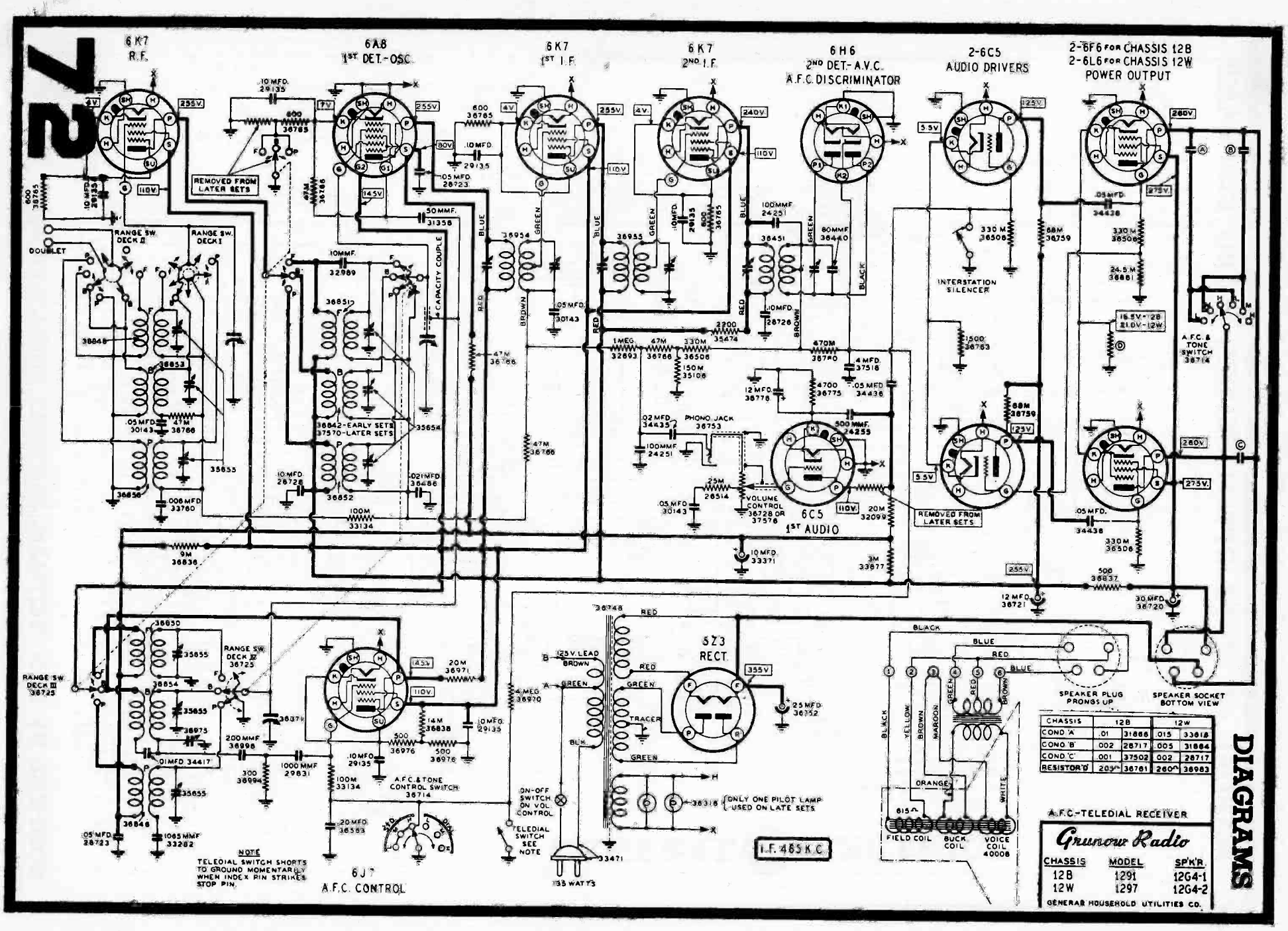

CHASSIS	12B		12W	
COND 'A'	.01	31866	.015	33618
COND 'B'	.002	28717	.005	31884
COND 'C'	.001	37502	.002	28717
RESISTOR 'D'	203Ω	36761	260Ω	36983

CHASSIS	MODEL	SP'K'R.
12B	1291	12G4-1
12W	1297	12G4-2

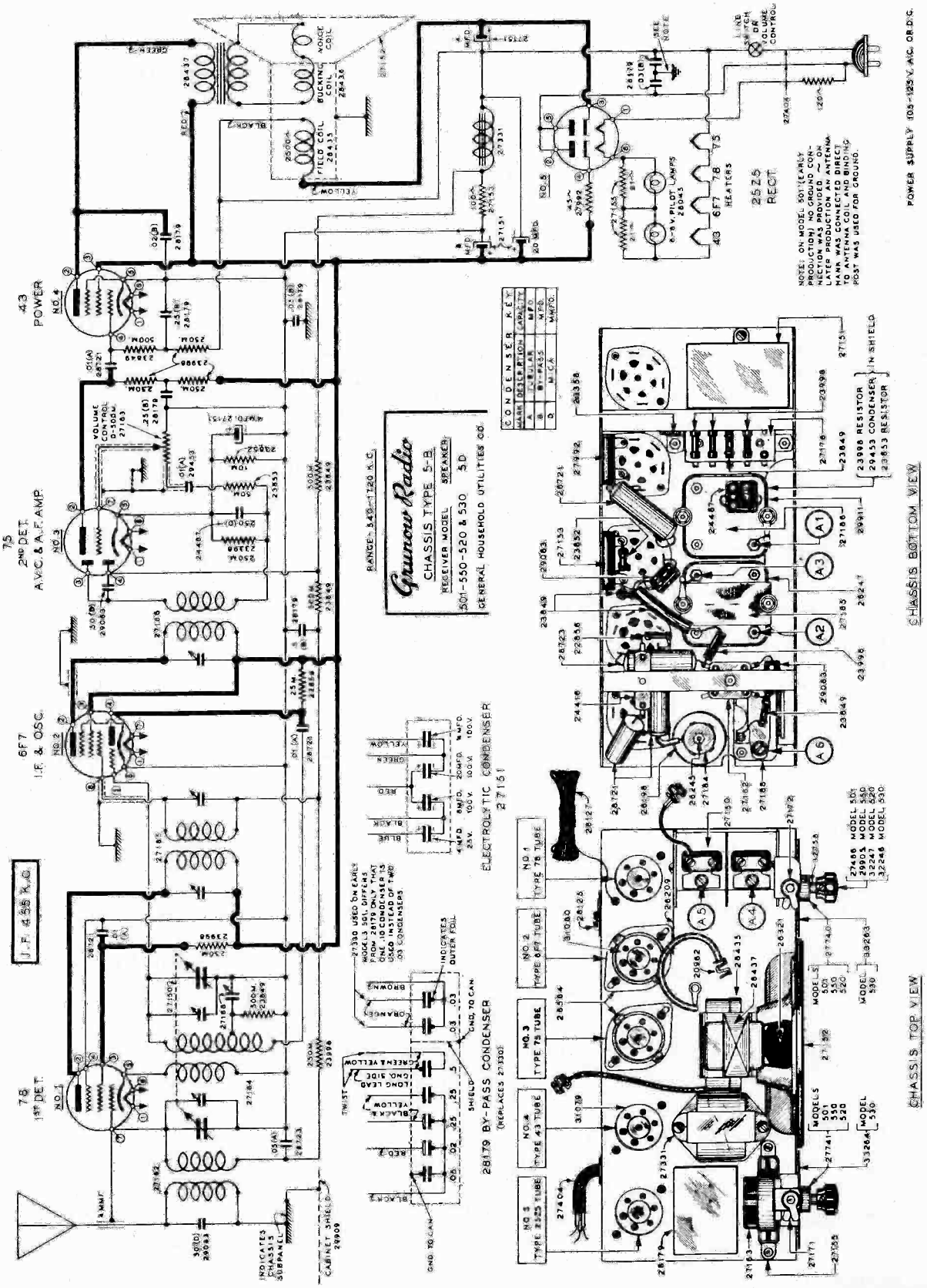
Grunow Radio
CHASSIS TYPE 5-B
RECEIVER MODEL SPEAKER
501-550-520 & 530 5D
GENERAL HOUSEHOLD UTILITIES CO.
RANGE: 540-1720 K.C.
43 POWER NO. 4
7.5 2ND DET. A.V.C. & A.F. AMP. NO. 3
6F7 I.F. & OSC. NO. 2
7.8 1ST DET. NO. 1
I.F. 456 K.C.
CONDENSER KEY
MARK DESCRIPTION CAPACITY
A TUBULAR MFD.
B BY-PASS MFD.
D MICA MMFD.
ELECTROLYTIC CONDENSER 27151
28179 BY-PASS CONDENSER (REPLACES 27330)
27330 USED ON EARLY MODELS SOL DIFFERS FROM 28179 IN THAT ONE 10 CONDENSER IS USED INSTEAD OF TWO .03 CONDENSERS
INDICATES OUTER FOIL
INDICATES CHASSIS SUBPANEL
CABINET SHIELD 29909
GND. TO CAN
SHIELD
TWIST
GREEN & YELLOW LONG LEAD LONG SIDE
NO. 1 TYPE 78 TUBE
NO. 2 TYPE 6F7 TUBE
NO. 3 TYPE 78 TUBE
NO. 4 TYPE 43 TUBE
NO. 5 TYPE 2525 TUBE
MODELS 501 550 520
MODEL 530
2525 RECT.
6F7 7.8 HEATERS
6-V. PILOT LAMPS 28045
LINE SWITCH OR VOLUME CONTROL
NOTE: ON MODEL 501 (EARLY PRODUCTION) NO GROUND CONNECTION WAS PROVIDED. ON LATER PRODUCTION AN ANTENNA LEAD WAS CONNECTED TO A WIRE LOOP AND BINDING POST WAS USED FOR GROUND.
POWER SUPPLY 105-125 V. A.C. OR D.C.
23998 RESISTOR
29453 CONDENSER IN SHIELD
23853 RESISTOR
CHASSIS BOTTOM VIEW
CHASSIS TOP VIEW
27486 MODEL 501
29905 MODEL 550
32247 MODEL 520
32248 MODEL 530

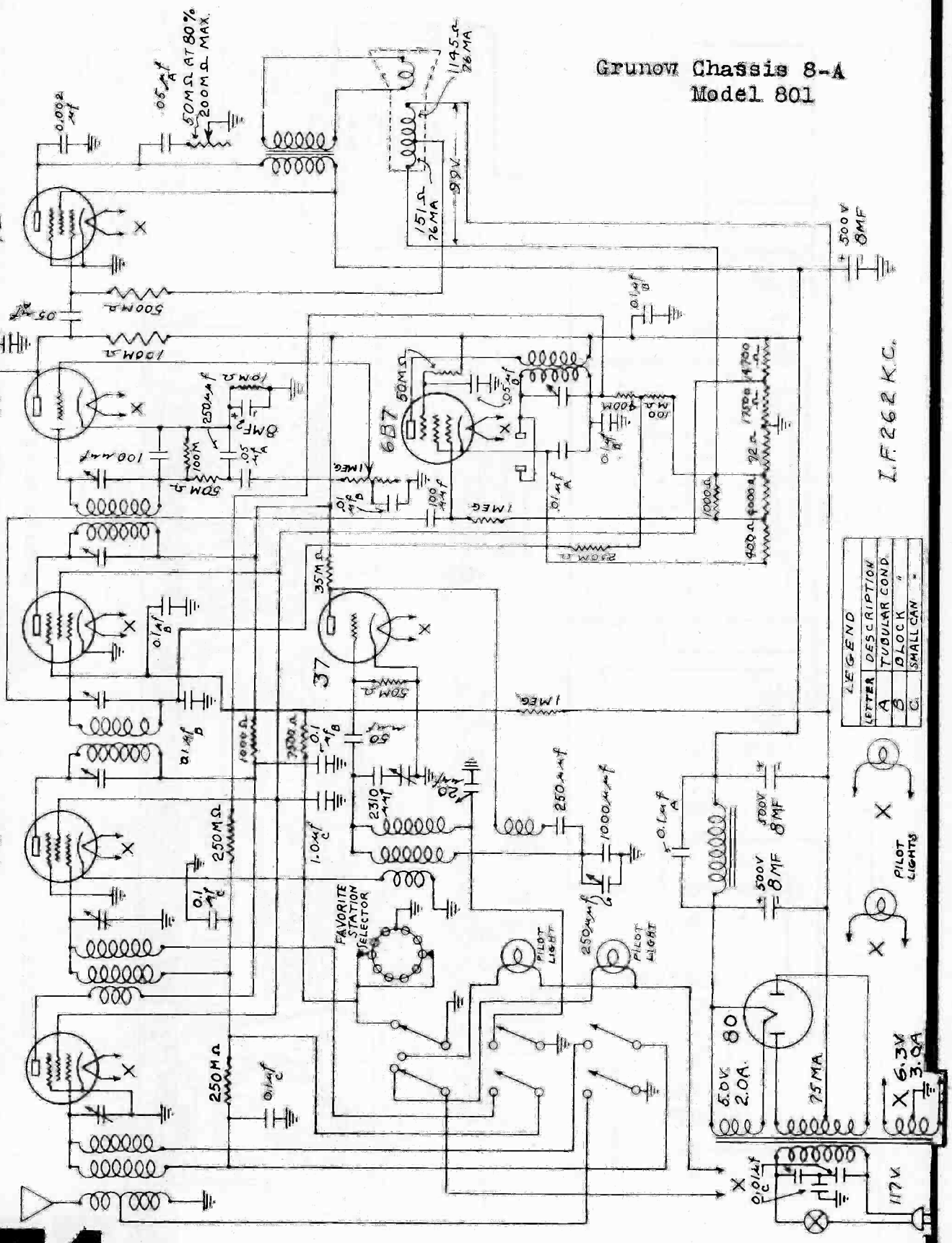
Grunow Chassis 8-A
Model 801
I.F. 262 K.C.
LEGEND
LETTER DESCRIPTION
A TUBULAR COND.
B BLOCK "
C SMALL CAN "
FAVORITE STATION SELECTOR
PILOT LIGHT
PILOT LIGHTS
42
85
78
78
78
687
37
80
99V
117V.
75MA
6.3V 3.0A
5.0V. 2.0A.
500V 8MF

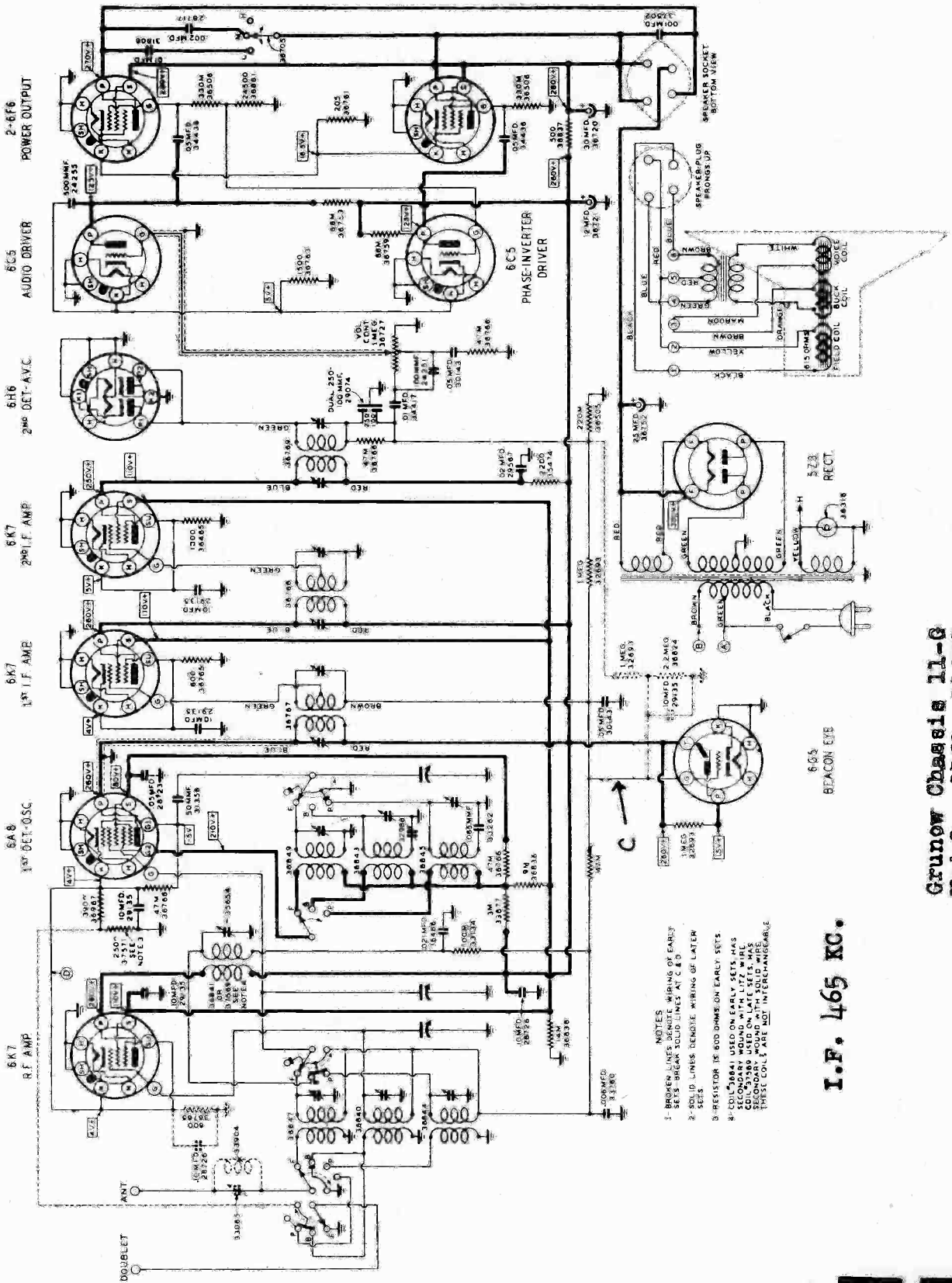

I.F. 465 KC.

Grunow Chassis 11-6
Models: 1191, 11913

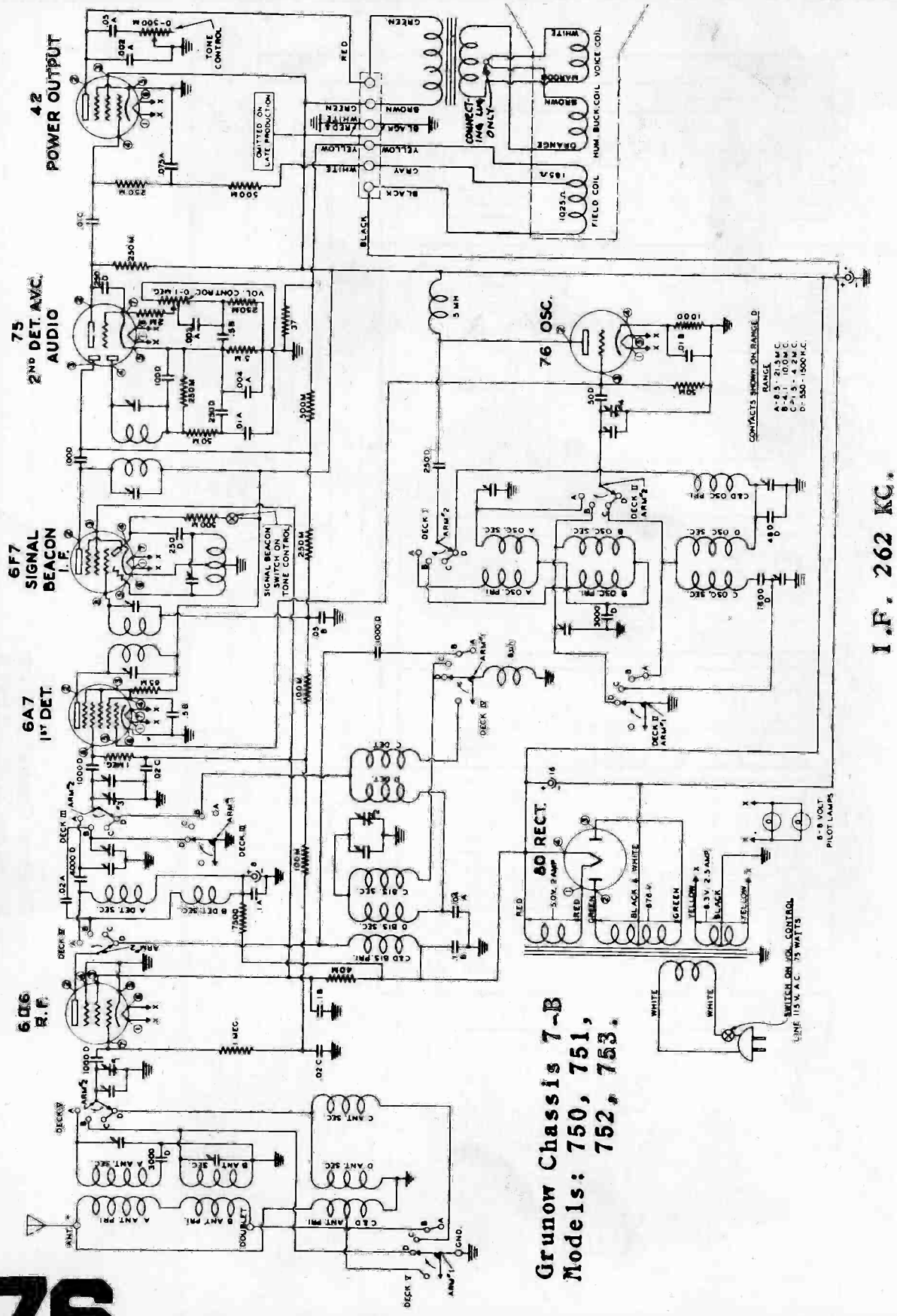

I.F. 262 KC.

Grunow Chassis 7-B
Models: 750, 751,
752, 753.

COMPILED BY M. N. BEITMAN, SUPREME PUBLICATIONS

General Motors

MODELS 120, 130 and 140

CHASSIS MODELS "A" and "B"

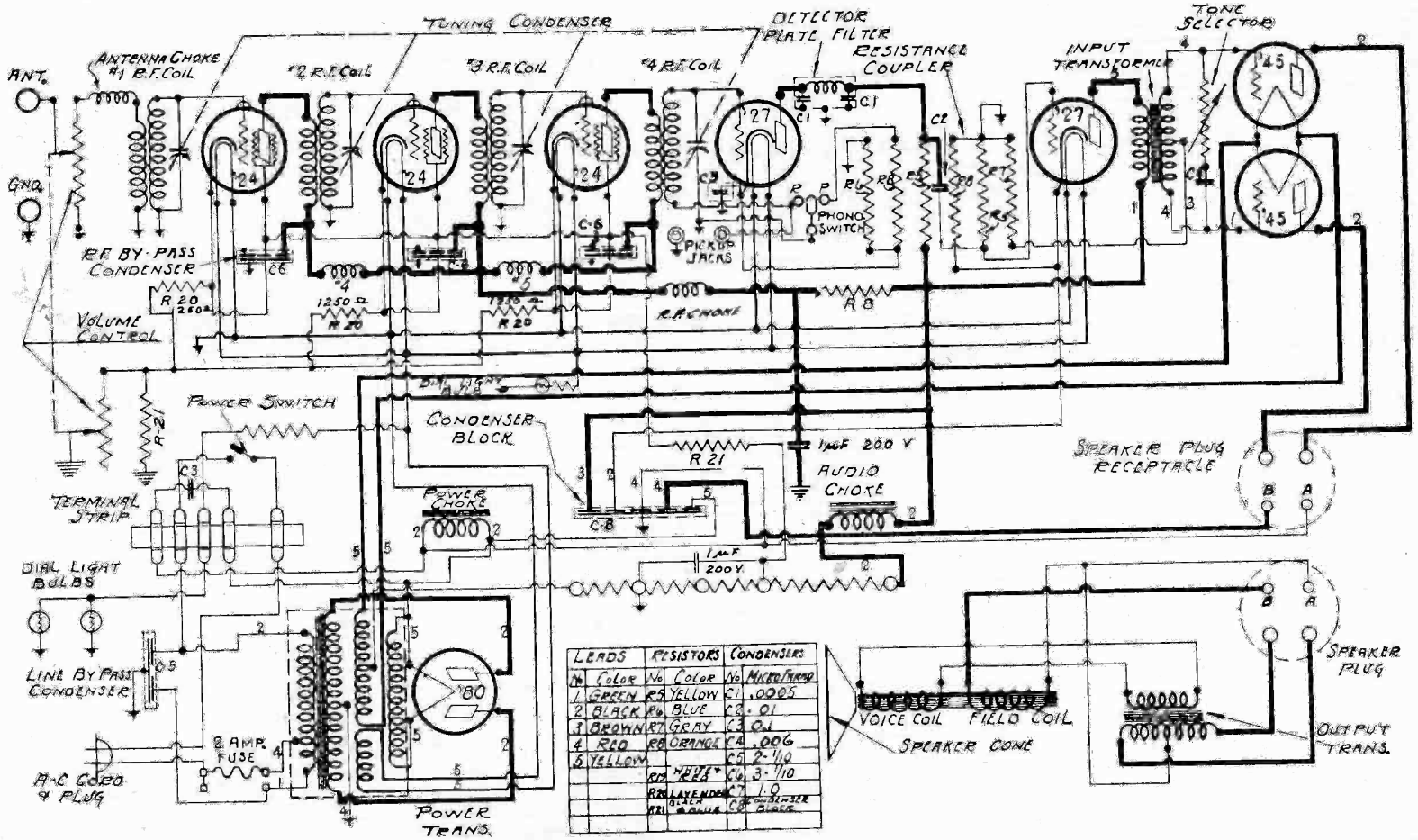

LEADS		RESISTORS		CONDENSERS	
No	COLOR	No	COLOR	No	MICRO FARAD
1	GREEN	R5	YELLOW	C1	.0005
2	BLACK	R6	BLUE	C2	.01
3	BROWN	R7	GRAY	C3	.01
4	RED	R8	ORANGE	C4	.006
5	YELLOW			C5	2-1/10
		R19	WHITE & RED	C6	3-1/10
		R20	LAVENDER	C7	1.0
		R21	BLACK & BLUE	C8	BROWN & BLACK

Circuit Diagram of Chassis with Serial Numbers Between 29100A and 6200A; and 1700B and 1946B.

BY M. N. BEITMAN

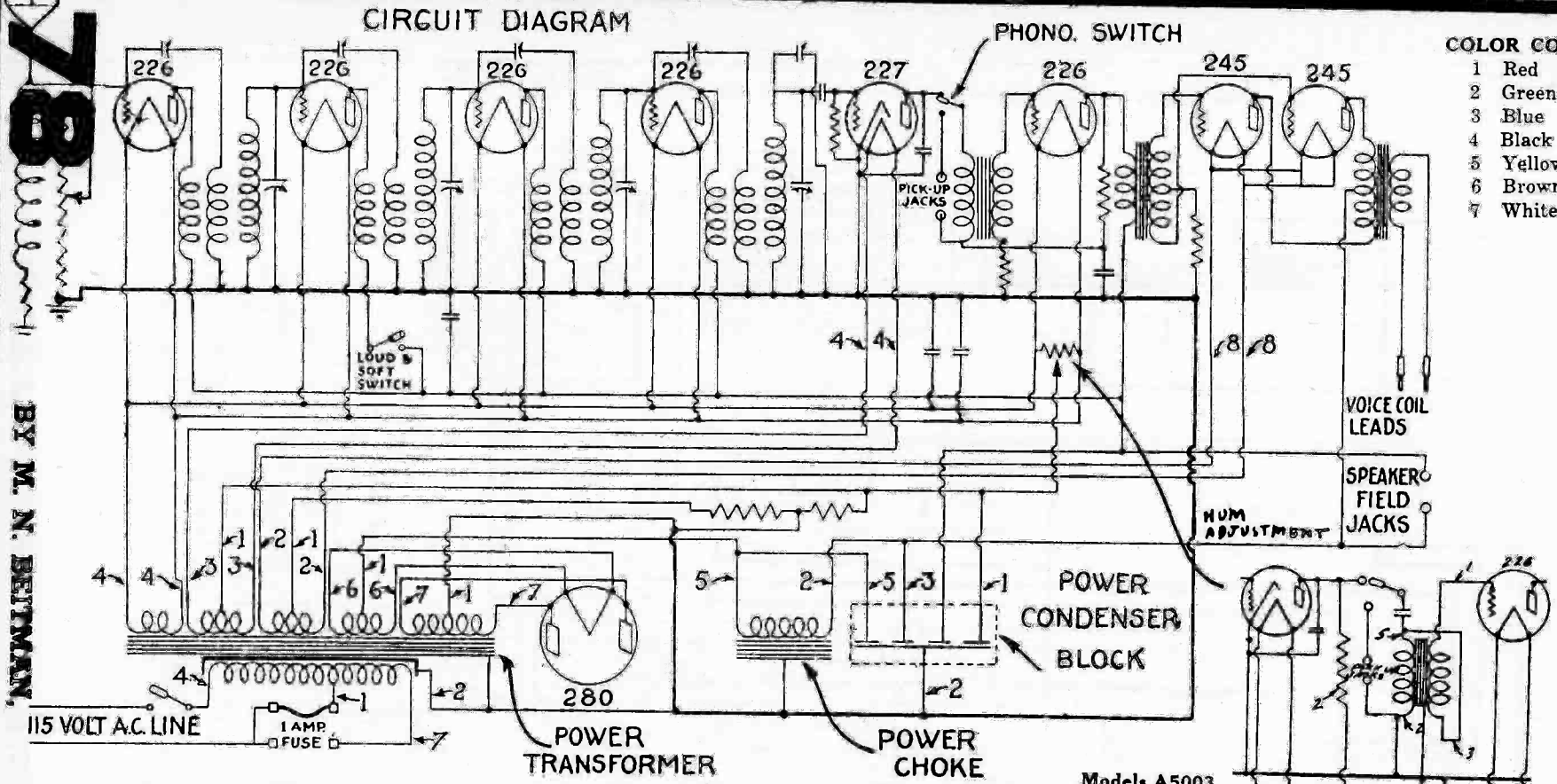

Models A5003 and A5010

Models 5091 (60 Cycle) and A5004 (25 Cycle) **General Motors**

The Circuit incorporates four balanced, tuned stages of radio frequency amplification, a semi-tuned antenna input system, detector, one stage of audio frequency amplification and one stage of push-pull audio frequency amplification. (Two 245 Power Tubes.)

An output push-pull transformer is used in order to match the impedance of the voice coil of the dynamic speaker with the output of the power tubes.

A switch is connected in the plate circuit of the second radio frequency tube, termed the soft and loud switch, which breaks the circuit, thereby reducing amplification in the first two tubes and improving the tone quality of local reception.

A phonograph pick-up unit may be permanently connected by inserting the tips in jacks provided for this purpose. A switch is provided which connects the pick-up to the first audio transformer, or connects the plate lead of the transformer to the plate of the detector, depending on whether radio reception or phonograph music is desired.

Power Pack 7-BP-6 and 7-BP-3

Models 71 and 72—Chassis 70-B

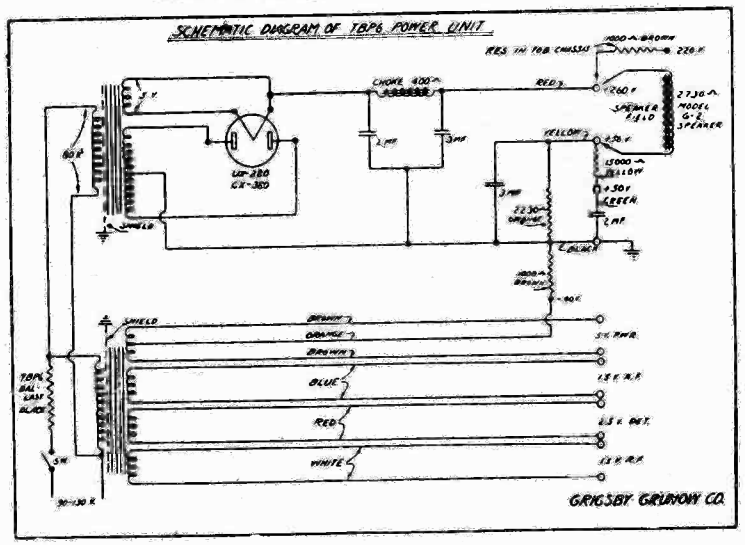

Power Pack 8-P-6 and 8-P-3

Model 181—Chassis 180

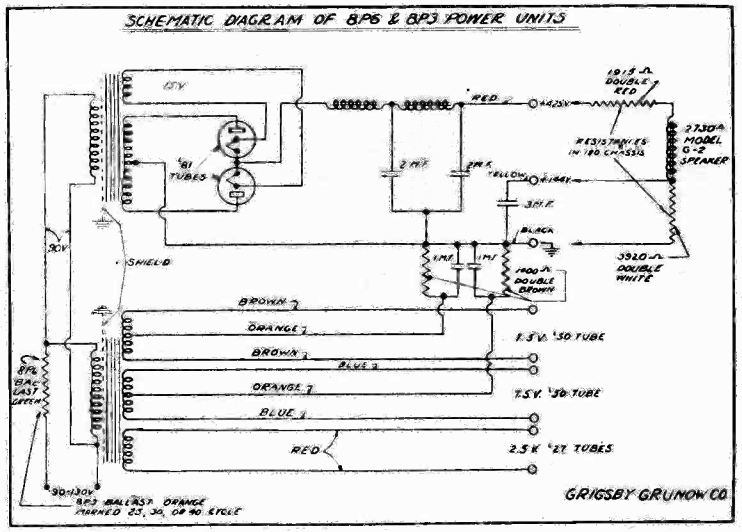

Power Pack 7-P-6 and 7-P-3

Models 71 and 72—Chassis 70

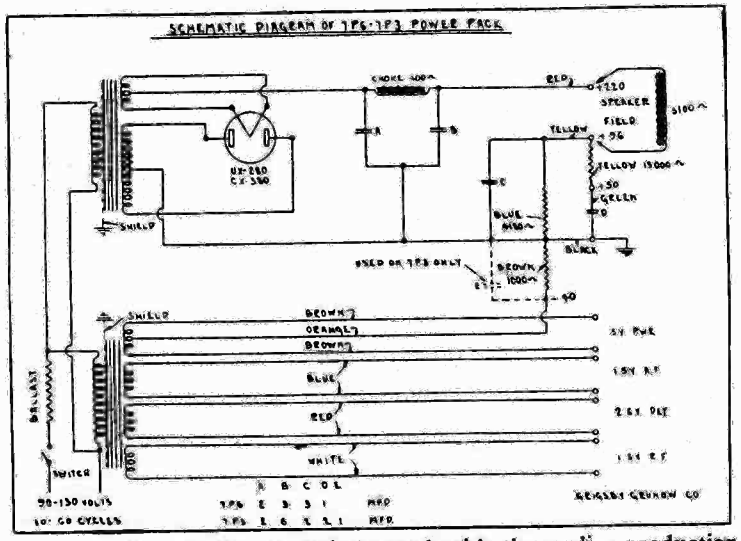

This type Power Unit is used with the earlier production Chassis 70, and has built-in ballast resistor.

Power Pack 9-P-6 and 9-P-3

Models 91, 92, 101—Chassis 90 and 100

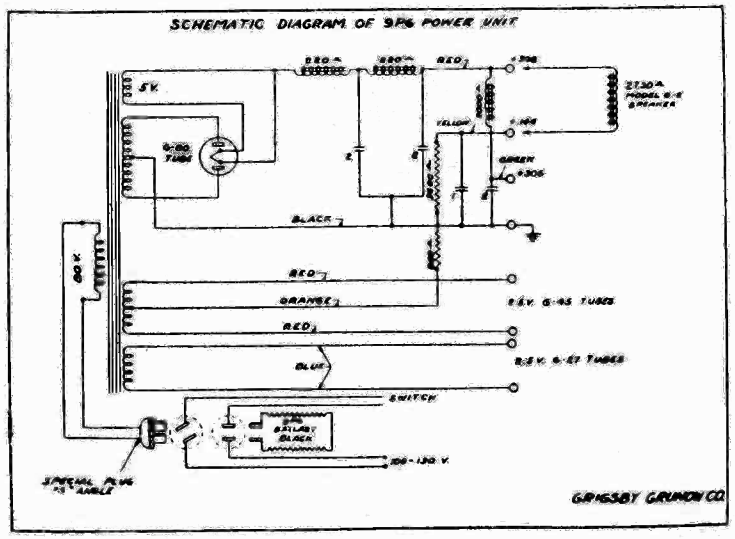

SCHEMATIC DIAGRAM OF MAJESTIC SCREEN GRID SUPERHETERODYNE RECEIVER
MODEL 15 AND 15-B CHASSIS (SERIAL NO. 65,150 AND OVER) 115 AND 230 VOLTS, 25-50 AND 50-60 CYCLES.
POWER REQD. - 60 WATTS

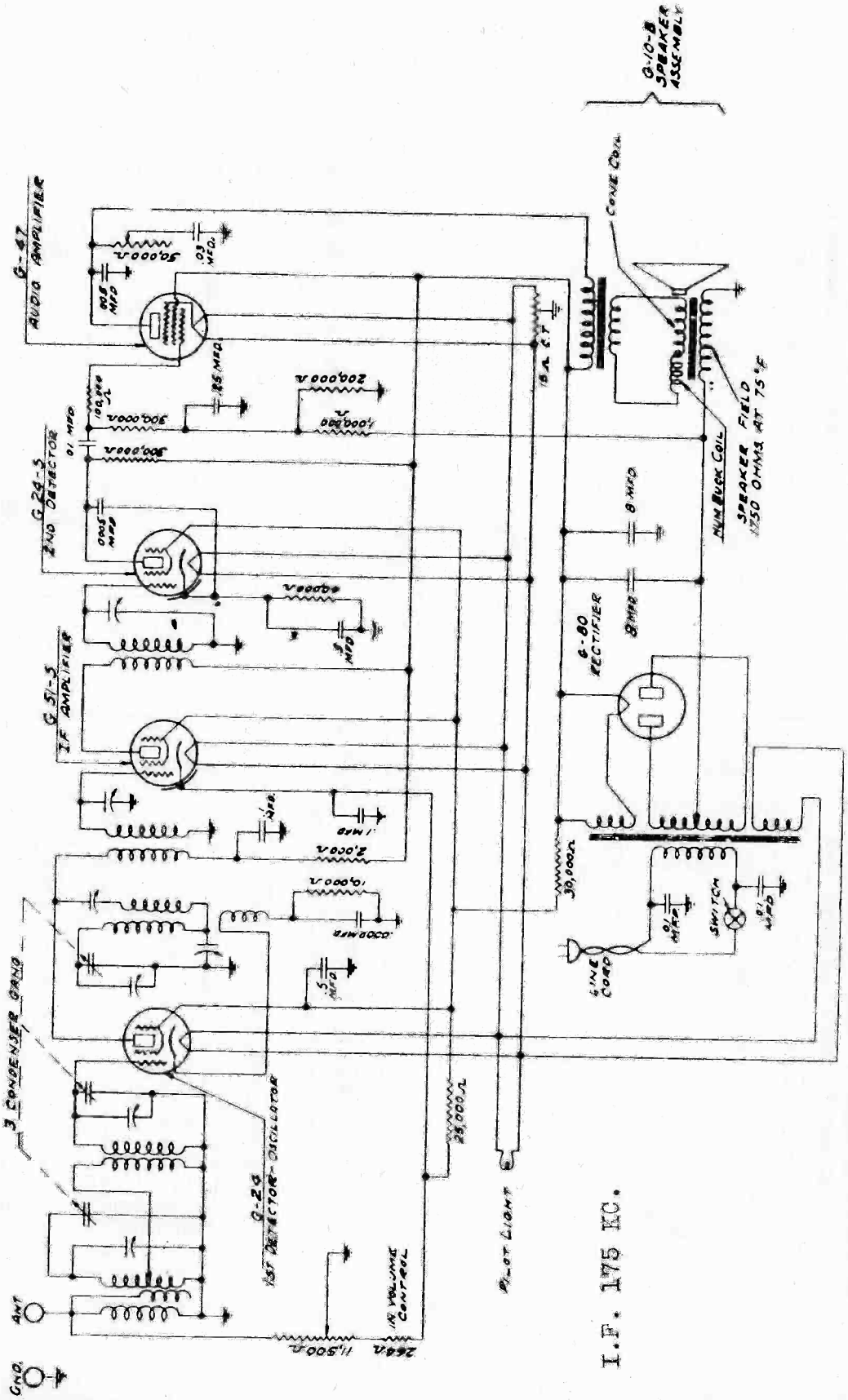

SCHEMATIC DIAGRAM OF MAJESTIC SCREEN GRID SUPERHETERODYNE RECEIVER
MODEL 20 CHASSIS 110 AND 220 VOLTS - 50-60 AND 25-40 CYCLE

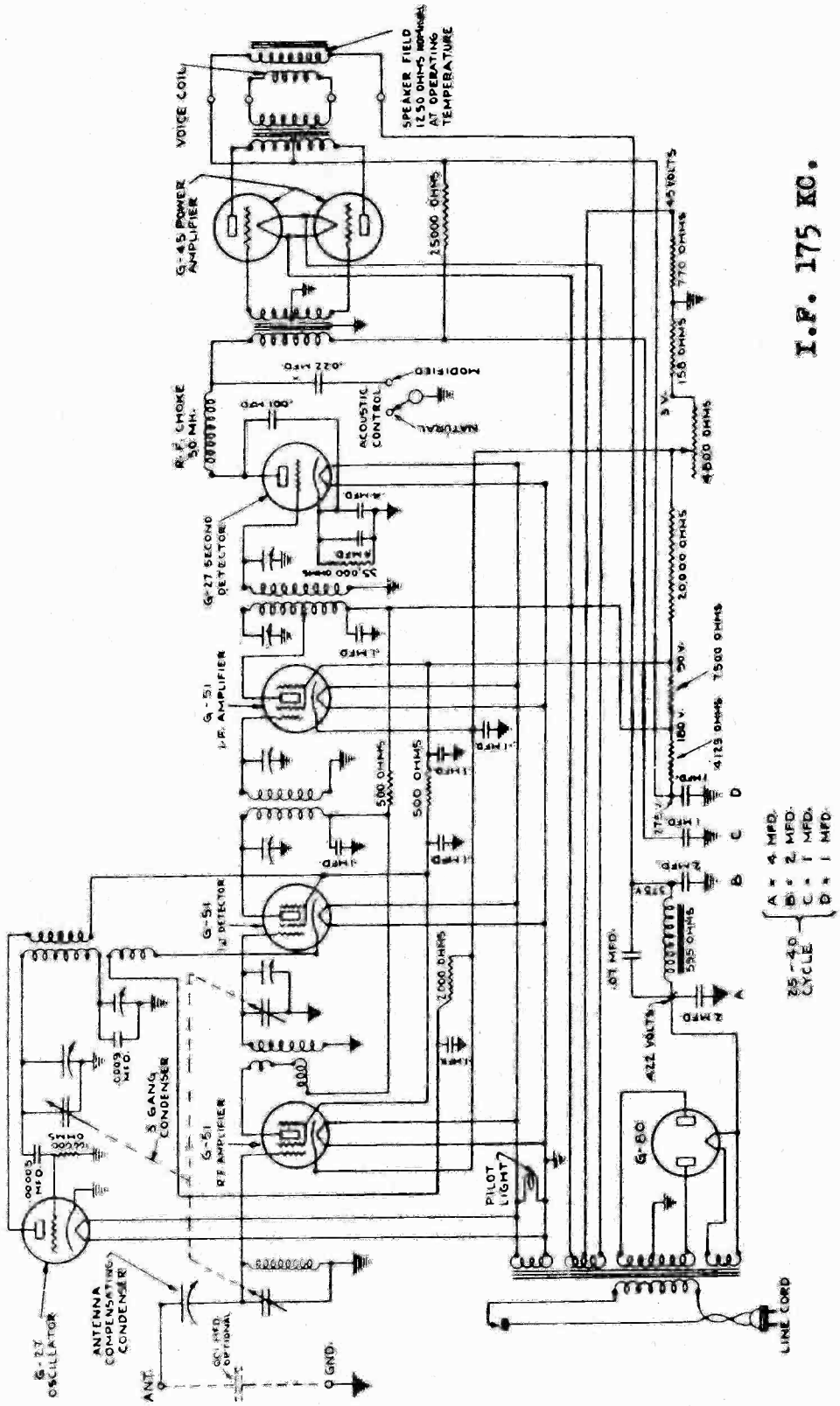

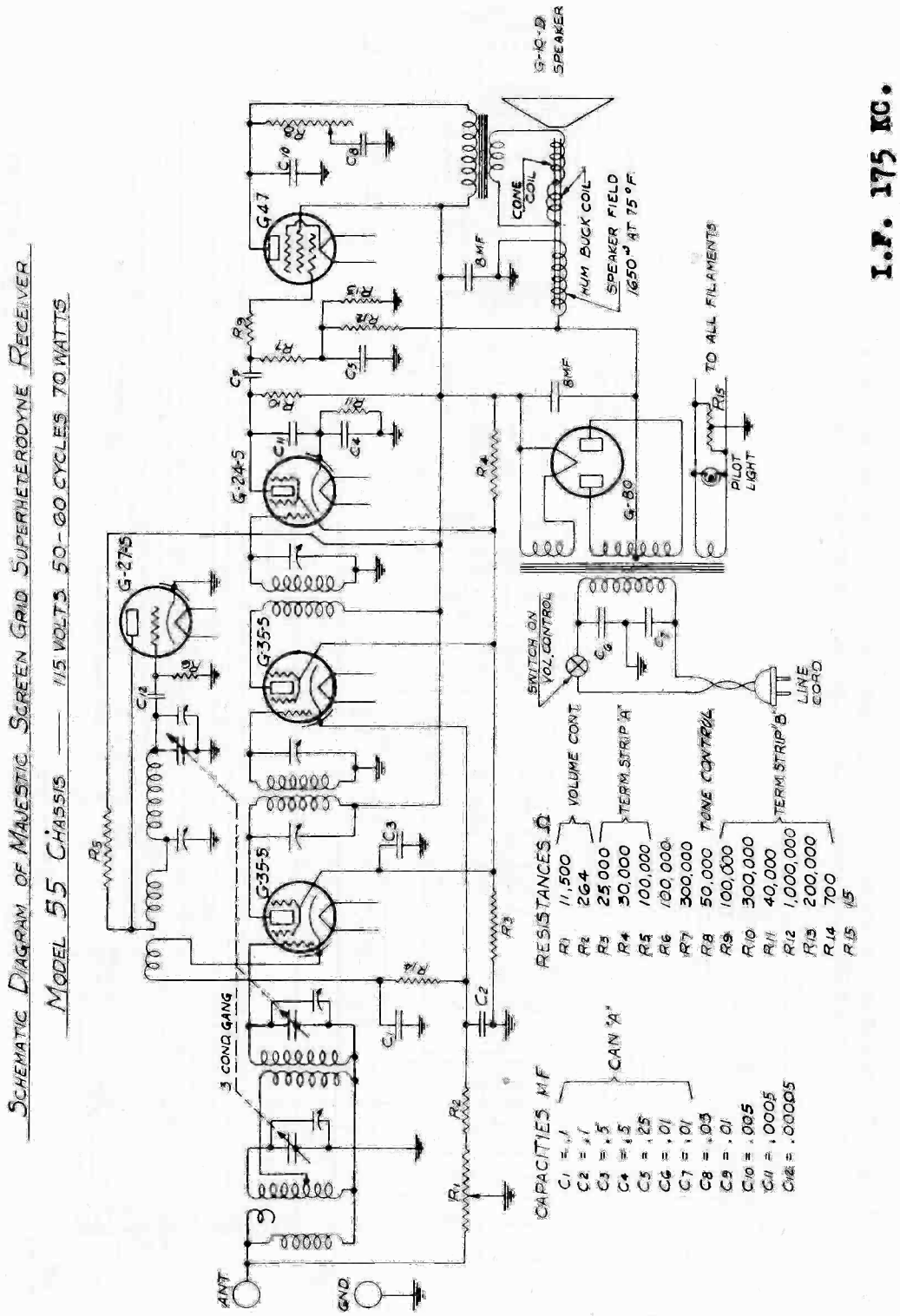
SCHEMATIC DIAGRAM OF MAJESTIC SCREEN GRID SUPERHETERODYNE RECEIVER
MODEL 55 CHASSIS — 115 VOLTS 50-60 CYCLES 70 WATTS
I.F. 175 KC.
G-27-5
G-35-5
G-35-5
G-24-5
G-47
G-80
G-10-D SPEAKER
CONE COIL
HUM BUCK COIL
SPEAKER FIELD 1650 Ω AT 75 °F.
8MF
8MF
TO ALL FILAMENTS
PILOT LIGHT
SWITCH ON VOL. CONTROL
LINE CORD
3 COND. GANG
ANT
GND.
VOLUME CONT.
TERM. STRIP 'A'
TONE CONTROL
TERM. STRIP 'B'
CAN 'A'
RESISTANCES Ω
R1 11,500
R2 264
R3 25,000
R4 30,000
R5 100,000
R6 100,000
R7 300,000
R8 50,000
R9 100,000
R10 300,000
R11 40,000
R12 1,000,000
R13 200,000
R14 700
R15 15
CAPACITIES MF
C1 = .1
C2 = .1
C3 = .5
C4 = .5
C5 = .25
C6 = .01
C7 = .01
C8 = .05
C9 = .01
C10 = .005
C11 = .0005
C12 = .00005

SCHEMATIC DIAGRAM OF MAJESTIC SCREEN GRID SUPERHETERODYNE AUTOMATIC VOLUME CONTROL RECEIVER - MODEL 60 CHASSIS 115 AND 220 VOLTS.

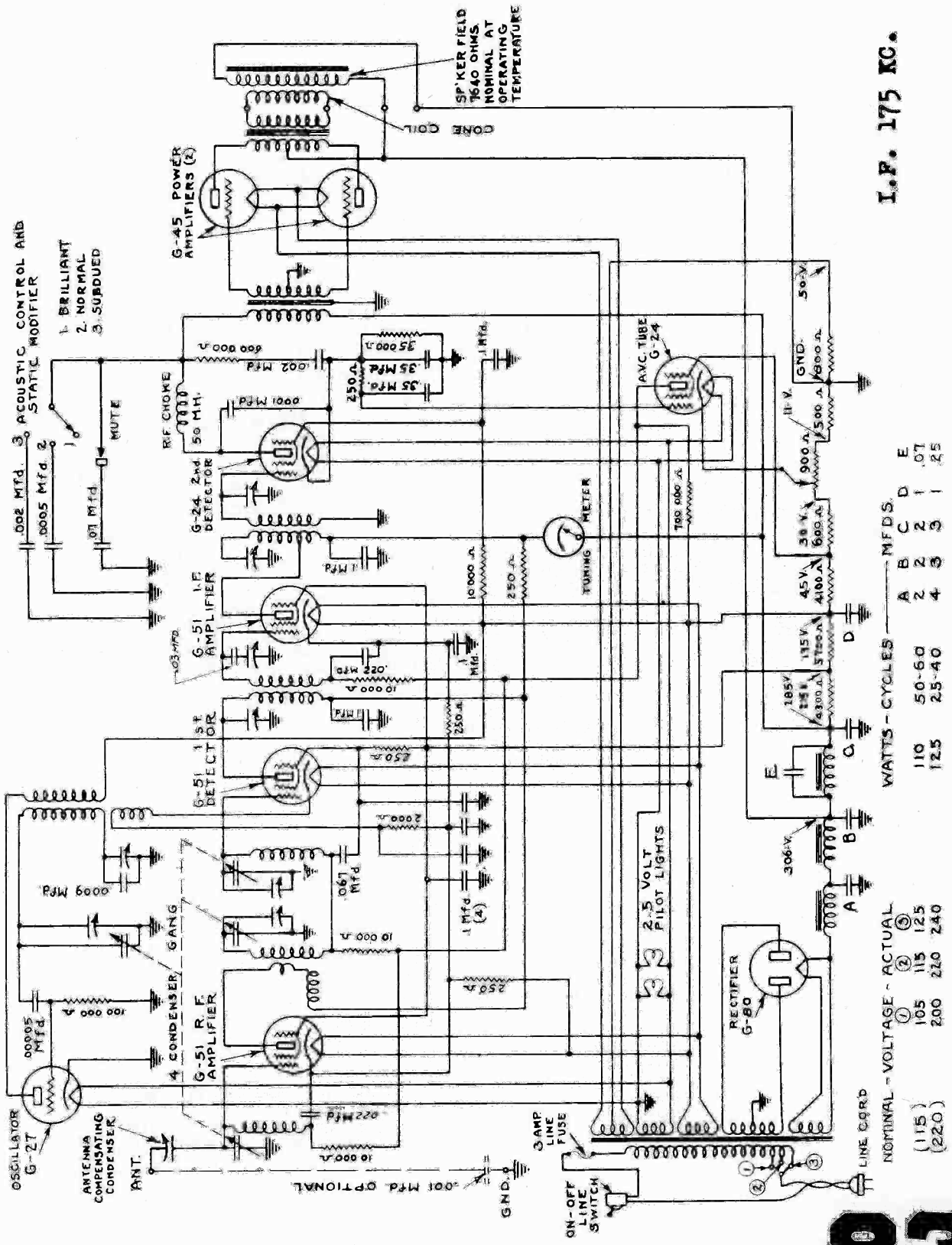

SCHEMATIC DIAGRAM OF MAJESTIC MODEL 66 AUTOMOBILE RECEIVER.

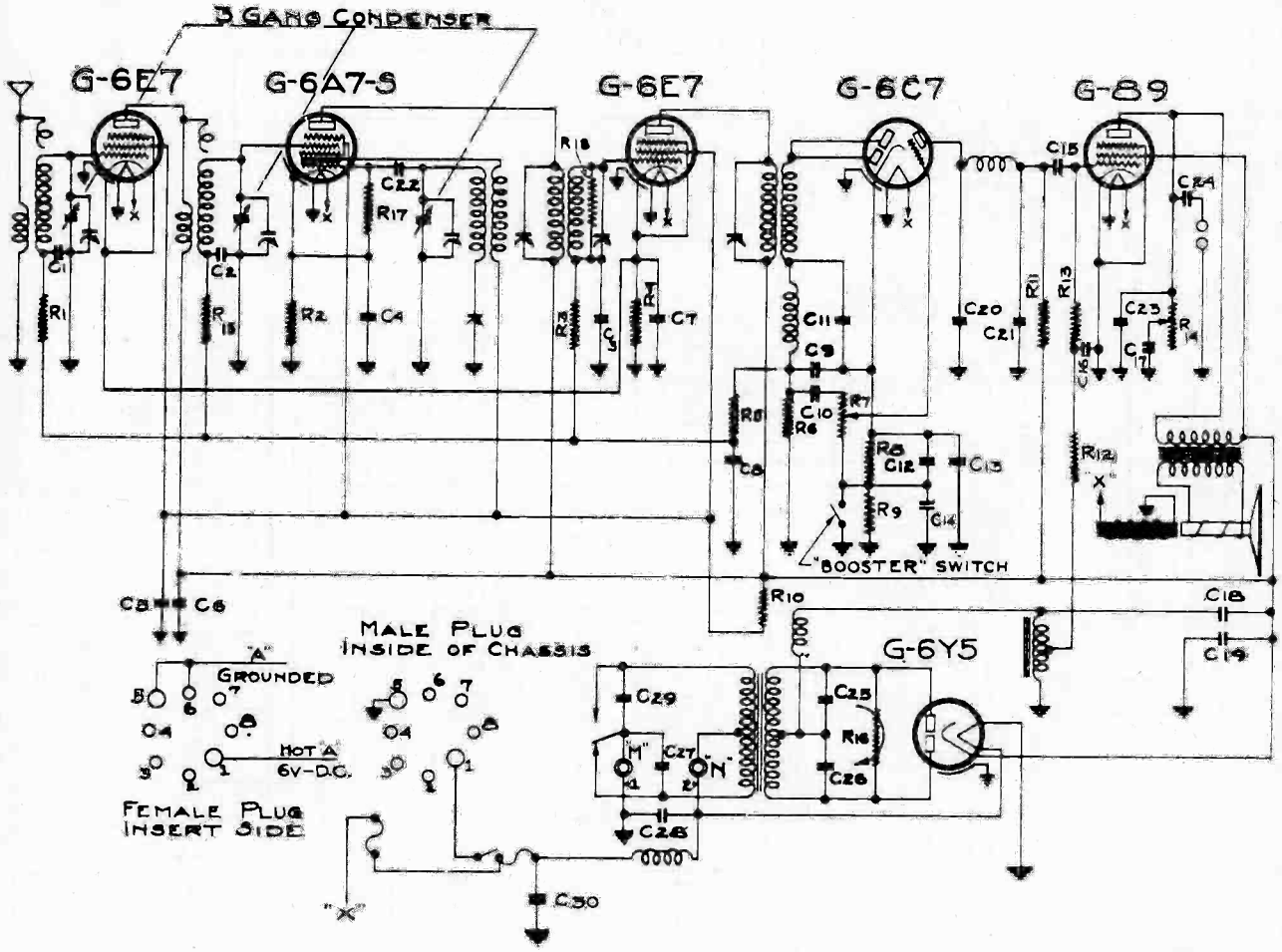

CONDENSERS

C1—.03	C16—.25
C2—.03	C17—.02
C3—.01	C18—8.0
C4—.1	C19—8.0
C5—.25	C20—.0005
C6—.25	C21—.0005
C7—.25	C22—.00025
C8—.03	C23—.005
C9—.0005	C24—.1
C10—.03	C25—.008
C11—.0005	C26—.008
C12—10.	C27—.1
C13—.25	C28—.5
C14—.25	C29—.1
C15—.03	C30—.5

RESISTORS

R1—300,000	R10—16,000
R2—250	R11—200,000
R3—300,000	R12—250,000
R4—400	R13—250,000
R5—300,000	R14—50,000
R6—100,000	R15—300,000
R7—200,000	R16—500,000 GLOBAR
R8—2,500	R17—50,000
R9—10,000	R18—1,000,000

NOTE

WHEN A+ IS GROUNDED VIBRATOR LEAD #1 (BLUE) SHOULD CONNECT TO TERMINAL "M" (VIBRATOR ARMATURE) AND LEAD #2 (BLACK) SHOULD CONNECT TO TRANS. PRIMARY CENTER TAP (TERMINAL "N") WHEN A- IS GROUNDED REVERSE ABOVE CONNECTIONS.

I.F. 175 KC.

COMPILED BY M. N. BEITMAN, SUPREME PUBLICATIONS

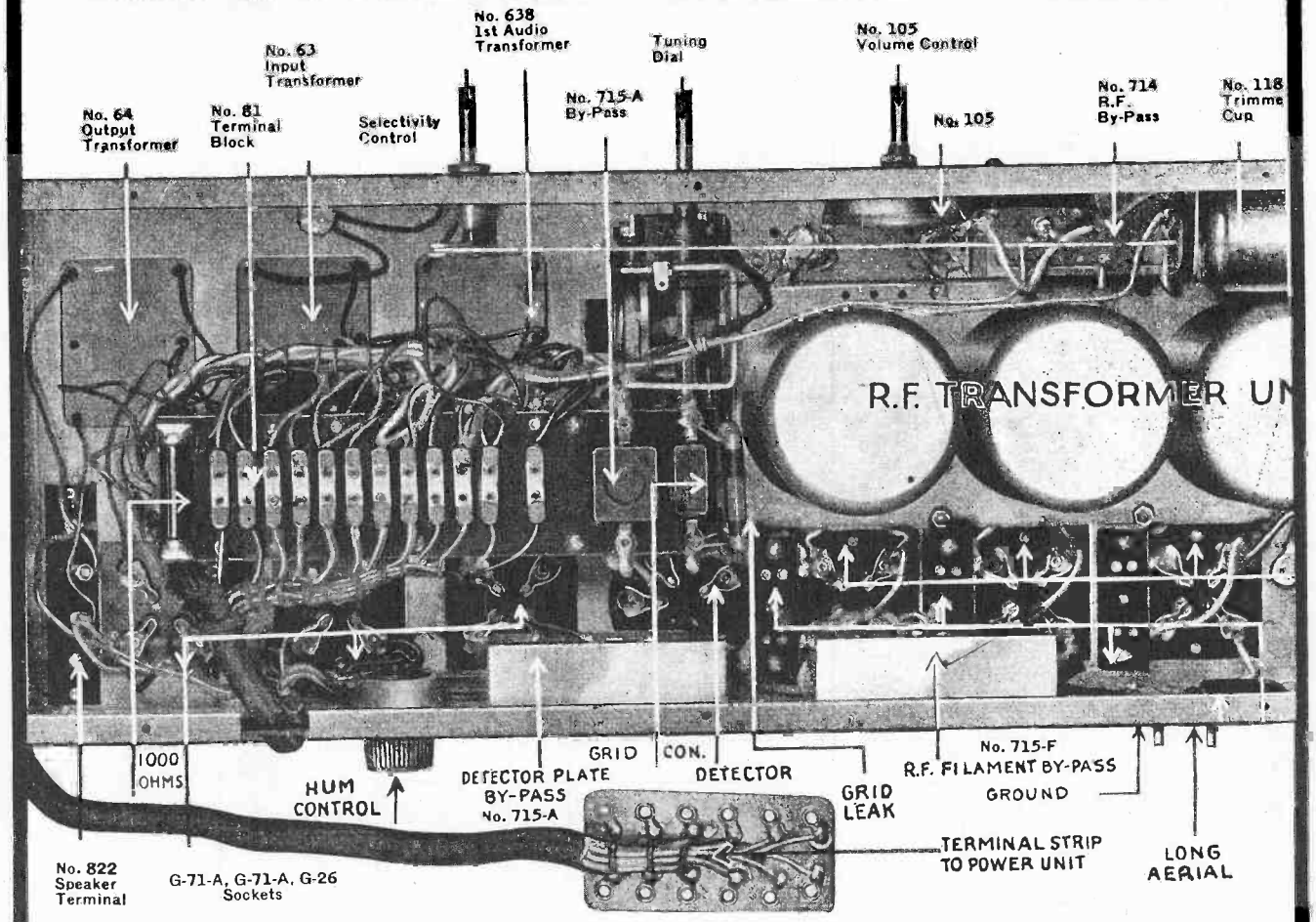

CHASSIS 70 and 70-B

Models 71 and 72

TUBES

R. F.	G-26	1st A. F.	G-26
R. F.	G-26	P. P. Ampl.	G-71-A
R. F.	G-26	P. P. Ampl.	G-71-A
Det.	G-27	G-80 Rect.	Power Unit

THE CIRCUIT

Tuned Radio Frequency. Built upon unit assembly plan.

Chassis. Has the 3 A.F. transformers, the volume control and input circuit, sockets, balancing condensers and by-pass condensers.

Tuning Condenser. 4 gang variable condenser, dial lamp and dial.

R.F. Transformers. Entirely Contained in shield, with leads that connect to various parts.

Terminal Strip. Includes power cable, grid condenser, grid leak, detector plate R.F. by-pass condenser, 2 center tapped resistances and 2 bias resistance units.

Wiring Cable. Accomplishes the internal wiring of receiver.

INPUT SYSTEM AND VOLUME CONTROL

The volume control is effected in the input circuit, making a smooth control due to the fact that R.F. amplifiers are functioning at maximum efficiency at any degree of volume. A potentiometer is placed across the .001 condenser with the movable arm attached to the antenna and controls signal voltage impressed across this condenser.

SELECTIVITY CONTROL

Integral with the input system is the antenna trimmer, which operates to vary the inductance of the antenna input coil and permits adjusting the input circuit to exact resonance with the other 3 tuned circuits.

SCHEMATIC DIAGRAM FOR MODEL 70B MAJESTIC RECEIVER

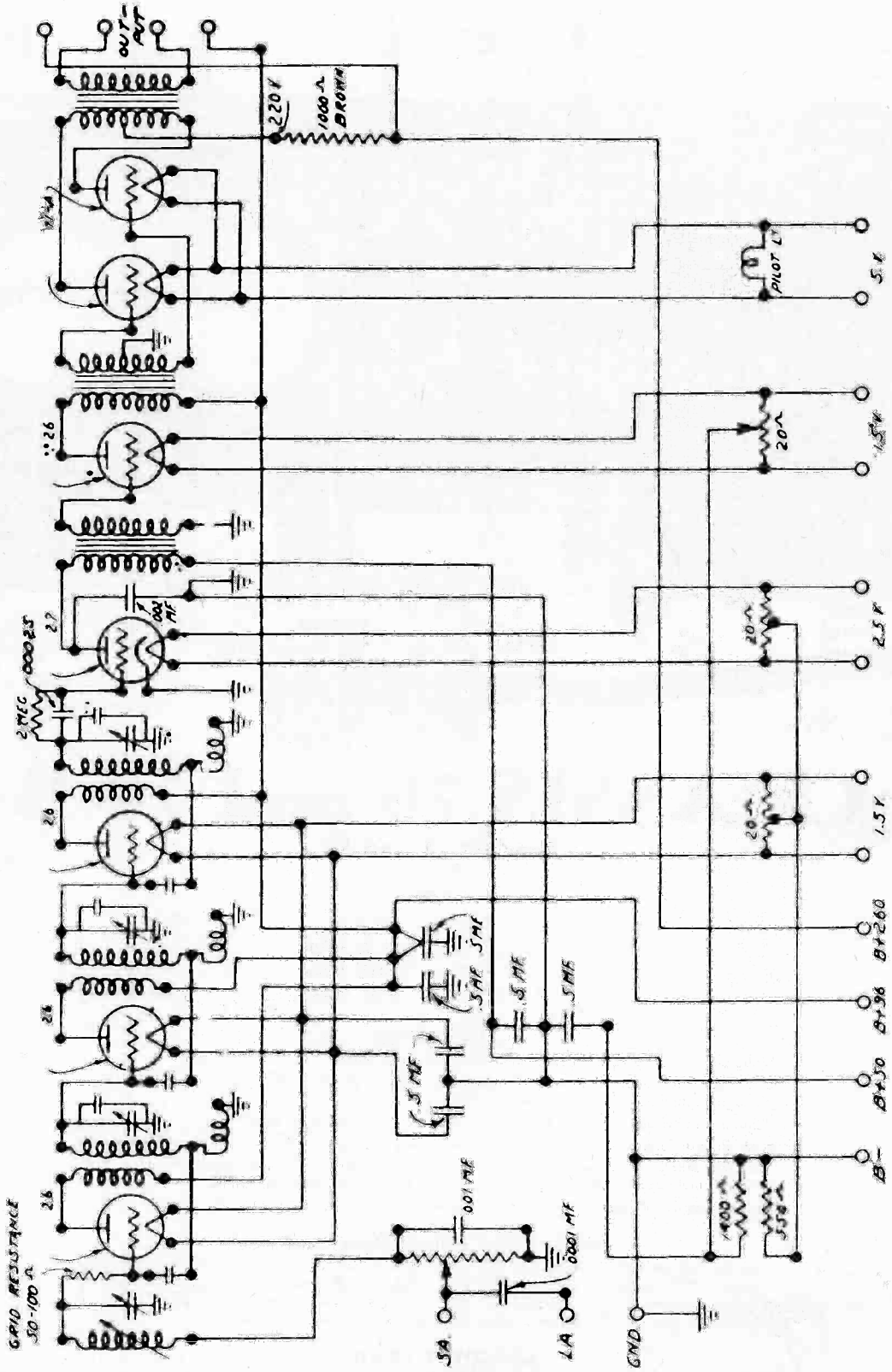

CHASSIS 90

Models 91, 92

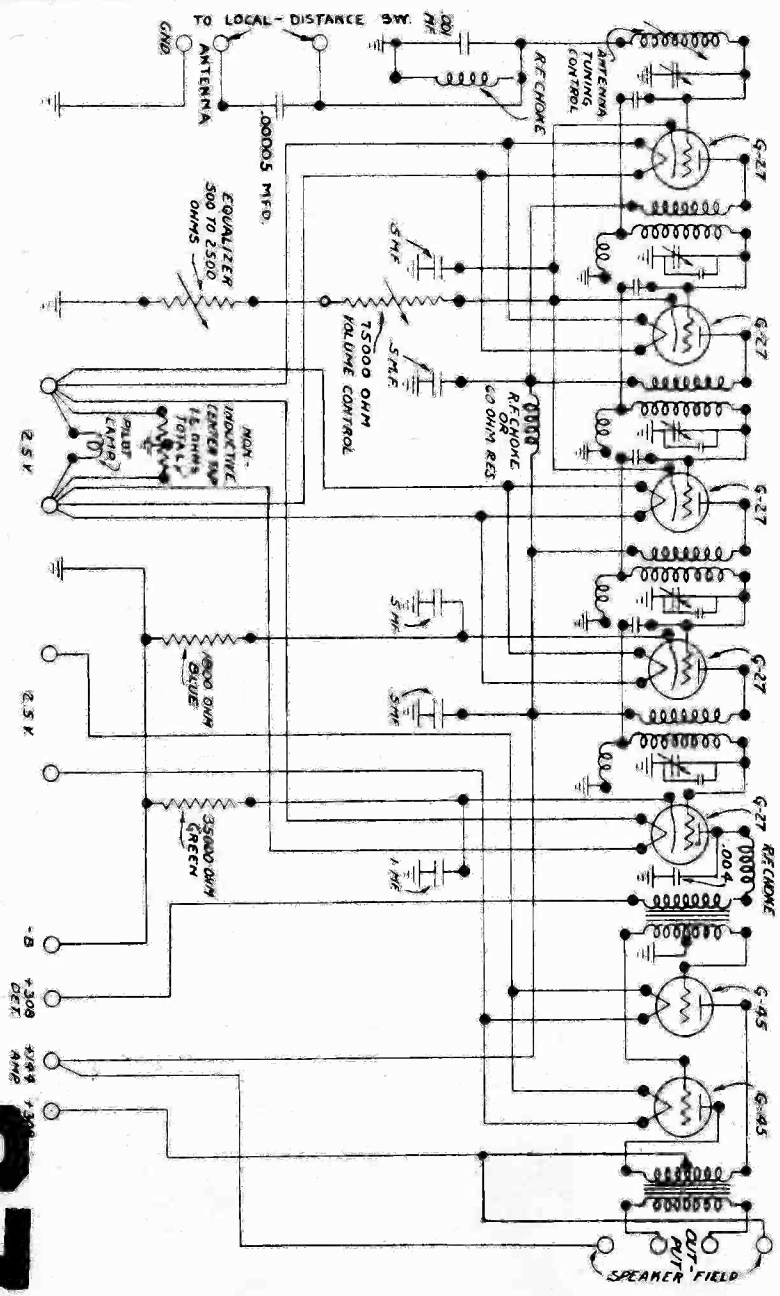

METHOD OF BIASING

Grid Biasing of the various tubes is accomplished by grounding the grids and applying a positive potential to the cathodes of three tubes.

The biasing of the first, second and third R.F. Tubes is accomplished by the use of a variable resistance from 500 to 2,500 Ohm, which is in series with the volume control resistance and is known as the Equalizer. It is mounted on the rotor shaft of the variable gang condenser and the movable arm turns as the rotor plates are moved. A potential of from 8 to 15 Volt is applied, depending on the tuning dial frequency. The Equalizer is adjusted for a resistance of 1,500 Ohm at 1,000 kilocycles, 500 Ohm at 550 kilocycles, 2,500 Ohm at 1,500 kilocycles, with 15% allowable variation for the last two measurements. The equalizer adjustment arm is secured by a set screw to the back of the gang condenser frame.

The position and tightness of this arm is important. Make sure that the set screw holding the Equalizer Shaft to the gang condenser just inside the gang frame is against the flat portion of the equalizer shaft.

BIASING	RESISTOR	BIAS VOLTAGE
4th R. F. Stage	1,800 Ohm	9
Detector	35,000 Ohm	32
G-45	800 Ohm	On Power Unit Terminal Strip

ALIGNING AND BALANCING

Make certain that resonance is obtained for each stage, using both Master Tuning Control and Trimmer. When using dummy tube for balancing, place shield over it, to include capacity effect of shield. A dummy tube having a Grid to Plate of appr. 3.4 m.m.f. is suggested, as this capacity is used when receiver was originally balanced. PROCEDURE OF BALANCING IS THE SAME AS FOR CHASSIS 70, 70B

ANTENNA SWITCH

To prevent distortion of tone from close-by powerful transmitters on moderately long antenna, snap switch to "Local" position. Use "Distance" position for stations with less powerful reception.

POWER UNIT

The Power Unit 9-P-6 and 9-P-3 is described on Page 79

INPUT CIRCUIT

On early production models, a fixed condenser of .0001 MFD. capacity is used, on later production a condenser of .00005 MFD. for the input circuit.

TABLE OF VOLTAGES

The voltage readings given below were taken with the receiver turned to 550 Kilocycles, and the volume control set at maximum. When taking comparative readings, be certain that receiver is tuned to 550 kilocycles and volume control is set at maximum.

Tube Purpose	Tube Type	A Volts	B Volts	C Volts	Cathode Volts	Normal Plate M.A.
1st R. F.	G-27	2.35	130	8	8	5.5
2nd R. F.	G-27	2.35	130	8	8	5.5
3rd R. F.	G-27	2.35	130	8	8	5.5
4th R. F.	G-27	2.35	130	9	9	5.0
Detector	G-27	2.35	270	30	30	1
Power	G-45	2.45	250	50	..	32
Power	G-45	2.45	250	50	..	32
Rectifier	G-80	...	....	..	..	..

Line Voltage 115 A. C.

CHASSIS 90-B

Models 90, 91, 93

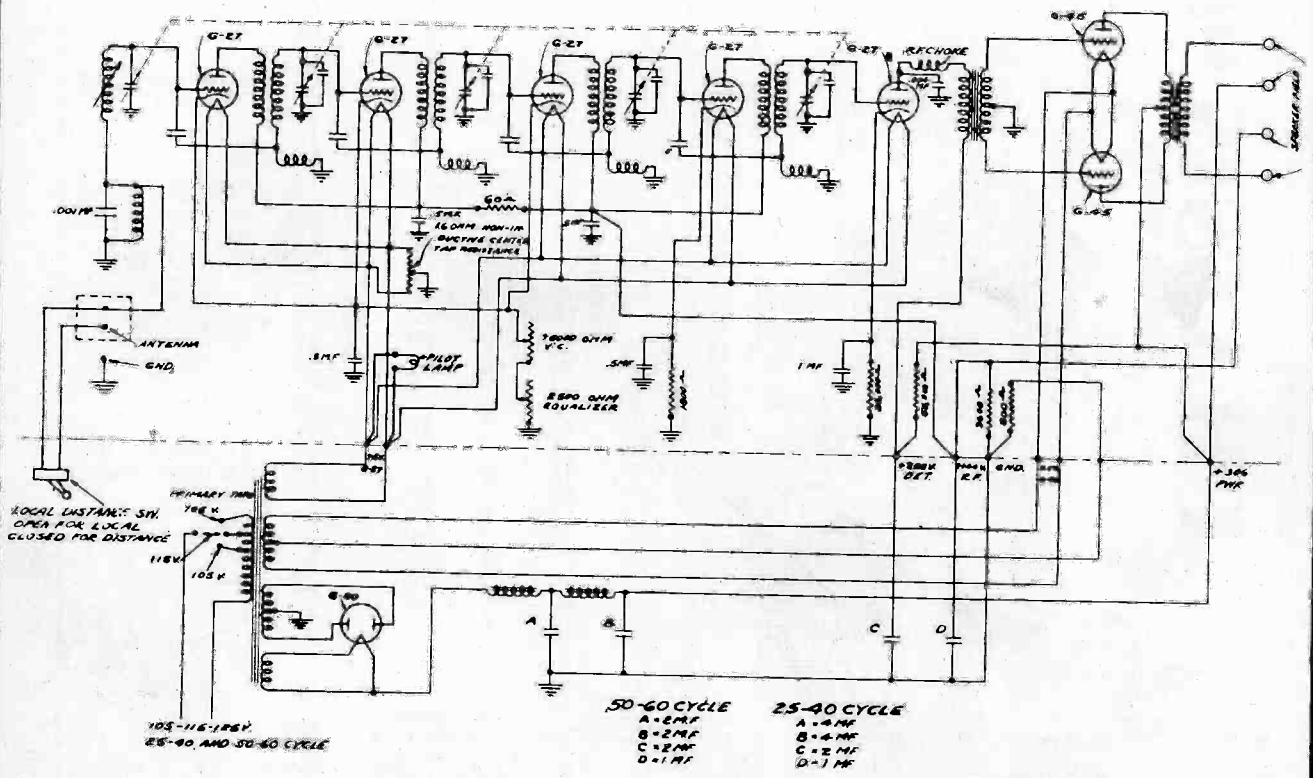

ANTENNA SWITCH

To prevent distortion of tone from close-by powerful transmitters on moderately long antenna, snap switch to "Local" position. Use "Distance" position for stations with less powerful reception.

ADJUSTMENT FOR LINE VOLTAGE

On the left side, directly in front of the G-80 Socket, you will note a small plate. Determine with A. C. Voltmeter or from local power company the average line voltage.

Upon removing the adjustment plate, you will find three taps, marked 105 Volts, 115 Volts and 125 Volts.

TABLE OF VOLTAGES

The voltage readings given below were taken with the receiver turned to 550 kilocycles, and the volume control set at maximum. When taking comparative readings, be certain that receiver is tuned to 550 kilocycles and volume control is set at maximum.

Tube Purpose	Type	Filament Voltage	Plate Voltage	Grid Bias Voltage	Cathode Volts	Normal Plate Milli-amperes
1st R. F.	G-27	2.35	130	8	8	5.5
2nd R. F.	G-27	2.35	130	8	8	5.5
3rd R. F.	G-27	2.35	130	8	8	5.5
4th R. F.	G-27	2.35	130	9	9	5.0
Detector	G-27	2.35	230	25	25	.8
Power	G-45	2.45	250	50	..	32
Power	G-45	2.45	250	50	..	32
Rectifying	G-80	...	...	..	..	..

Line Voltage 115 A. C. on 115 volt tap.

THE CIRCUIT

The T.R.F. balanced circuit is employed with a single control, five gang condenser. The detector output is fed directly to the push-pull audio stage. The selectivity control or trimmer functions by varying the inductance of the antenna input coil and permits adjust in the input circuit to exact resonance with the other turned circuits.

The R. F. Unit assembly (No. 1434) includes the radio frequency transformers with shields, the R. F. Sockets, the balancing condensers and the radio frequency, cathode and plate By-Pass Condensers. The terminal strip includes one 800 Ohm, one 1,800 Ohm and one 50,000 Ohm Resistor, being the bias resistors of the Power Tubes, the 4th R.F. Tube and the Detector Plate resistance respectively.

POWER SUPPLY

Composed of Power Transformer, a Choke Unit and Condenser Bank for the filter system. The resistors (800 and 3,600 Ohm) are placed on terminal strip. A Type G-80 Rectifying tube is used.

COMPILED BY M. N. BEITMAN, SUPREME PUBLICATIONS

SCHEMATIC DIAGRAM
MAJESTIC-MODEL 116-AUTOMOBILE RECEIVER

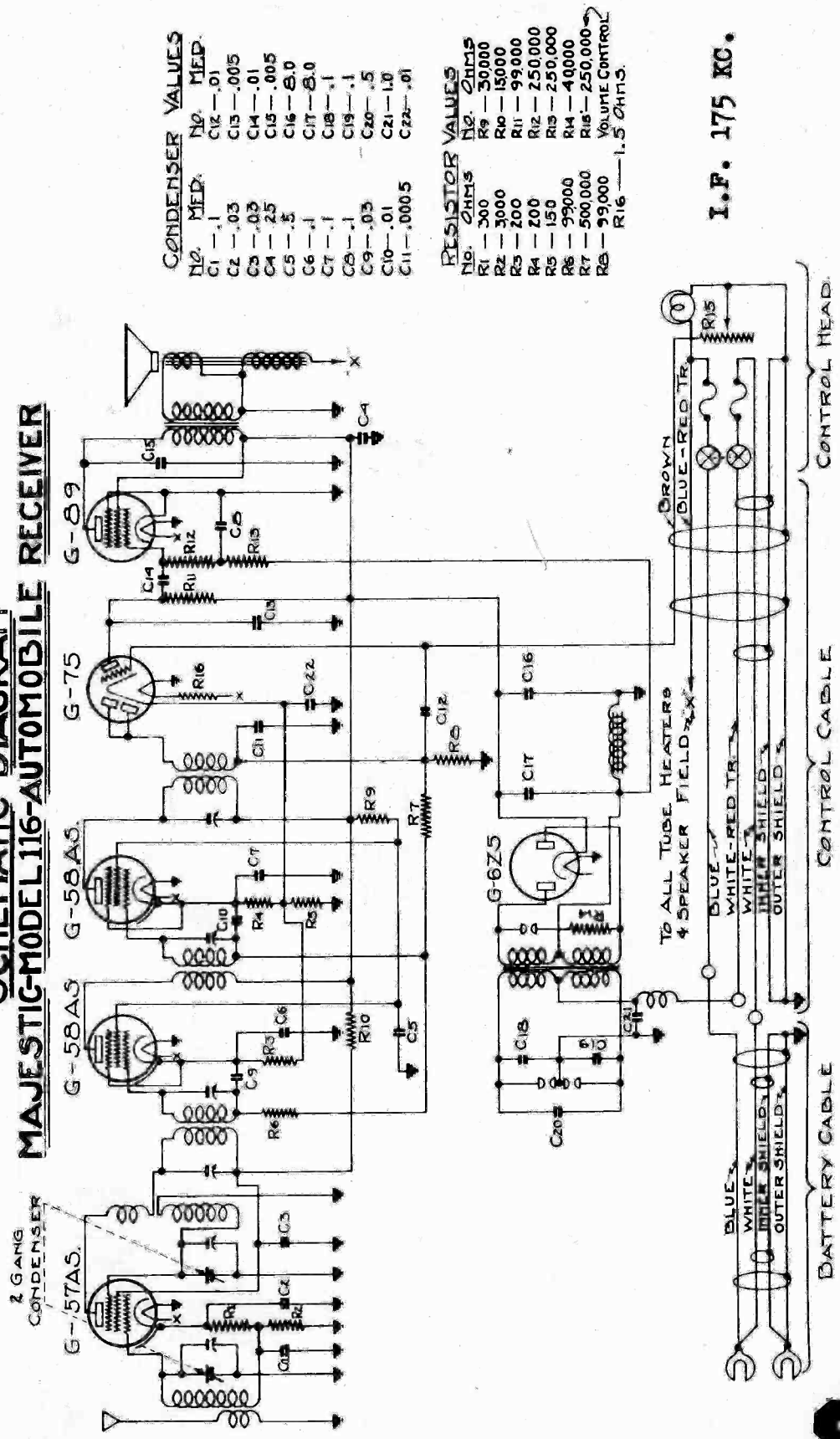

CONDENSER VALUES

No.	Mfd.	No.	Mfd.
C1	.1	C12	.01
C2	.03	C13	.005
C3	.03	C14	.01
C4	25	C15	.005
C5	.5	C16	8.0
C6	.1	C17	8.0
C7	.1	C18	.1
C8	.1	C19	.1
C9	.03	C20	.5
C10	.01	C21	1.0
C11	.0005	C22	.01

RESISTOR VALUES

No.	Ohms	No.	Ohms
R1	300	R9	30,000
R2	3000	R10	15000
R3	200	R11	99,000
R4	200	R12	250,000
R5	150	R13	250,000
R6	99000	R14	40,000
R7	500,000	R15	250,000 (Volume Control)
R8	99,000	R16	1.5 Ohms

I.F. 175 KC.

SCHEMATIC DIAGRAM of MAJESTIC SUPER SCREEN GRID RECEIVER

MODEL 130-A CHASSIS 25-40 & 50-60 CYCLE

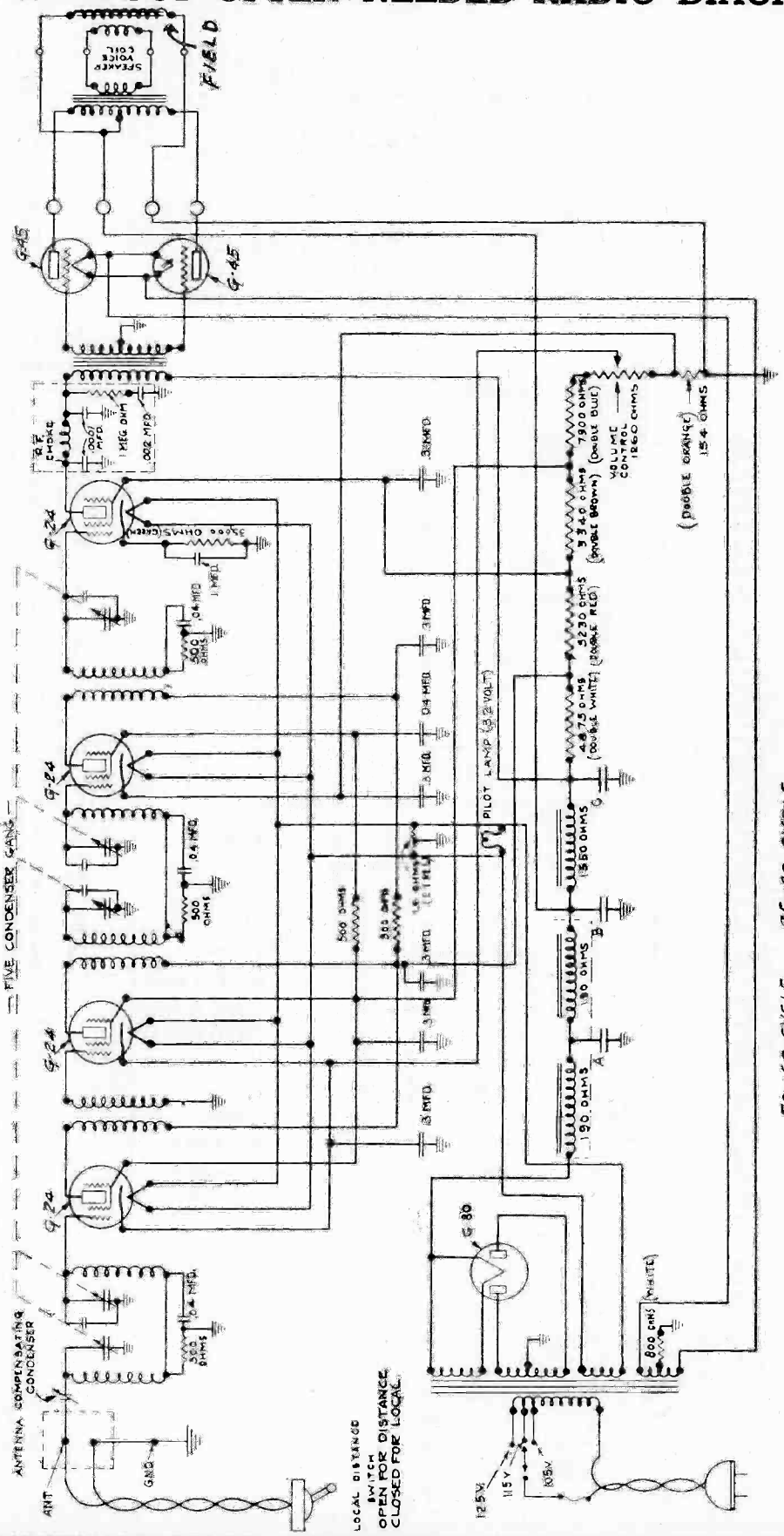

MANUAL OF MOST-OFTEN-NEEDED RADIO DIAGRAMS

SCHEMATIC DIAGRAM OF MAJESTIC SCREEN GRID SUPERHETERODYNE AUTOMATIC VOLUME CONTROL RECEIVER AND ELECTRIC PHONOGRAPH COMBINATION MODEL 160 CHASSIS 115 AND 220 VOLTS, 25-40 AND 50-60 CYCLES.

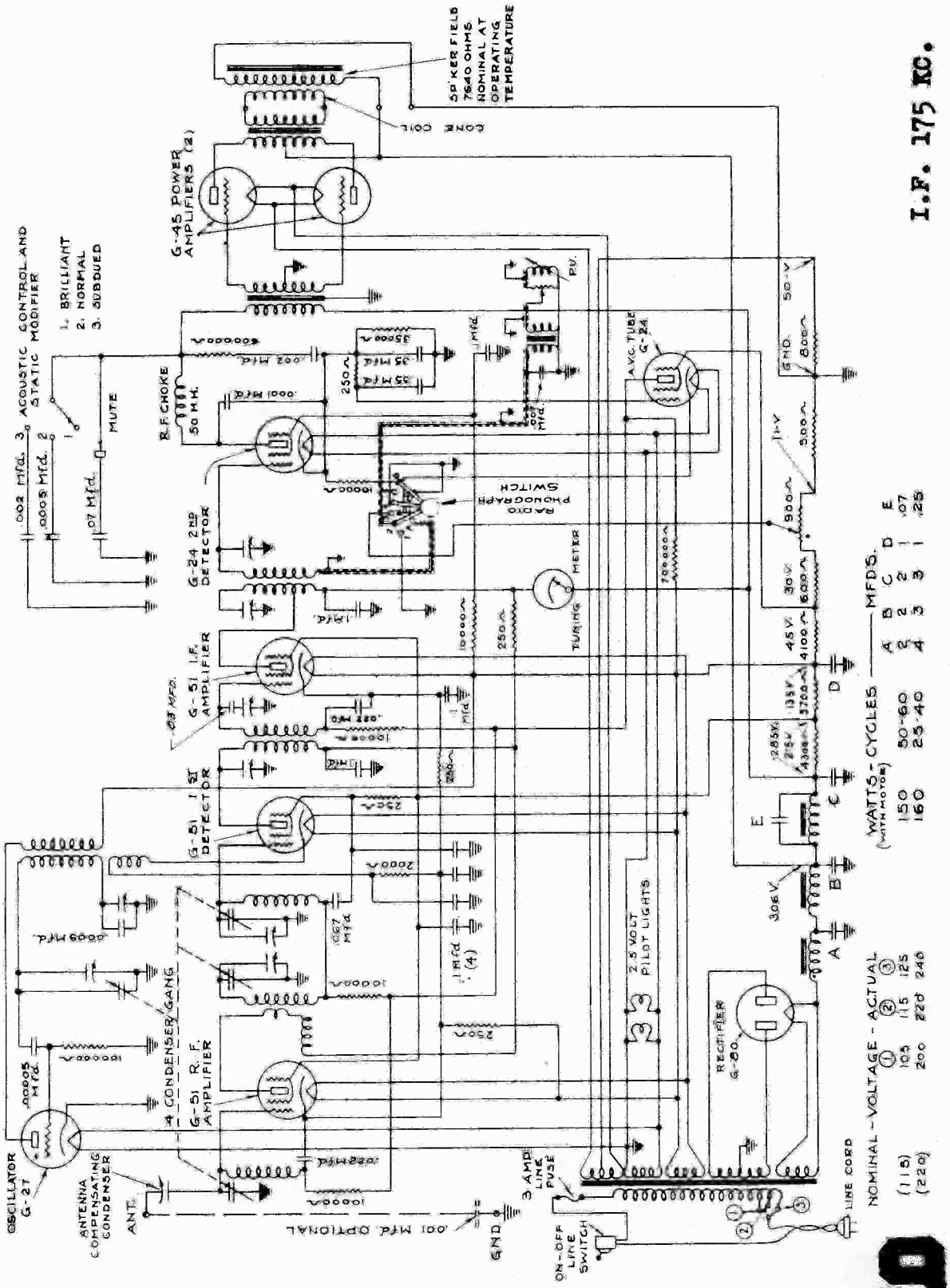

COMPILED BY M. N. BEITMAN, SUPREME PUBLICATIONS

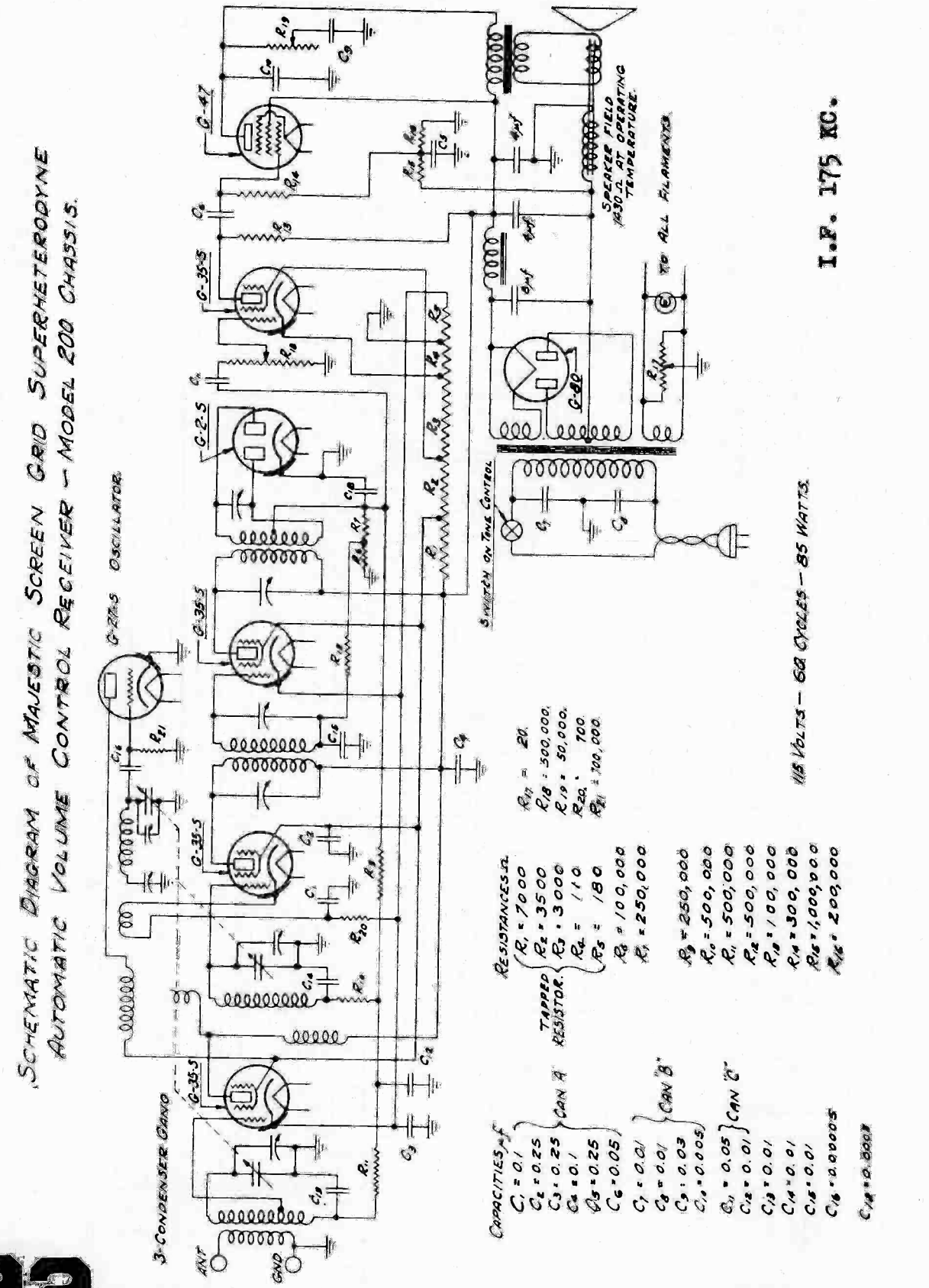
SCHEMATIC DIAGRAM OF MAJESTIC SCREEN GRID SUPERHETERODYNE
AUTOMATIC VOLUME CONTROL RECEIVER – MODEL 200 CHASSIS.
I.F. 175 KC.
115 VOLTS – 60 CYCLES – 85 WATTS.
SPEAKER FIELD 1830 Ω AT OPERATING TEMPERATURE.
TO ALL FILAMENTS.
SWITCH ON TONE CONTROL
3-CONDENSER GANG
OSCILLATOR.
ANT
GND
G-47
G-35-5
G-2-5
G-80
G-27-5
RESISTANCES Ω.
TAPPED RESISTOR.
CAPACITIES μf
CAN 'A'
CAN 'B'
CAN 'C'

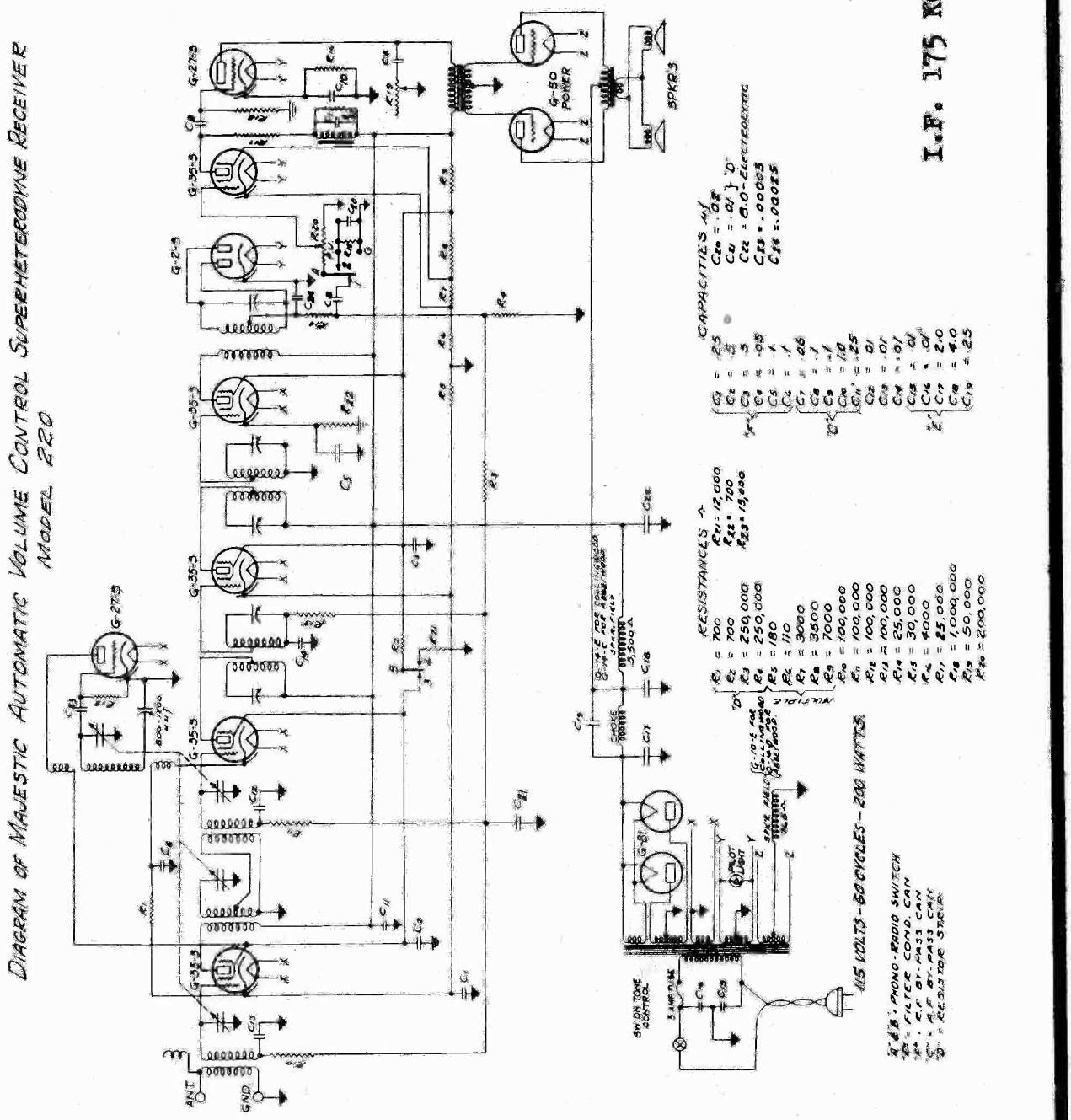
DIAGRAM OF MAJESTIC AUTOMATIC VOLUME CONTROL SUPERHETERODYNE RECEIVER
MODEL 220
I.F. 175 KC.
G-27-3
G-35-3
G-2-3
G-50 POWER
SPKR.
ANT.
GND.
CAPACITIES µf
RESISTANCES Ω
MULTIPLE
G-81
PILOT LIGHT
SWITCH
SWITCH TONE CONTROL
115 VOLTS - 60 CYCLES - 200 WATTS
"A" = PHONO-RADIO SWITCH
"B" = FILTER COND. CAN
"C" = R.F. BY-PASS CAN
"D" = A.F. BY-PASS CAN
"E" = RESISTOR STRIP

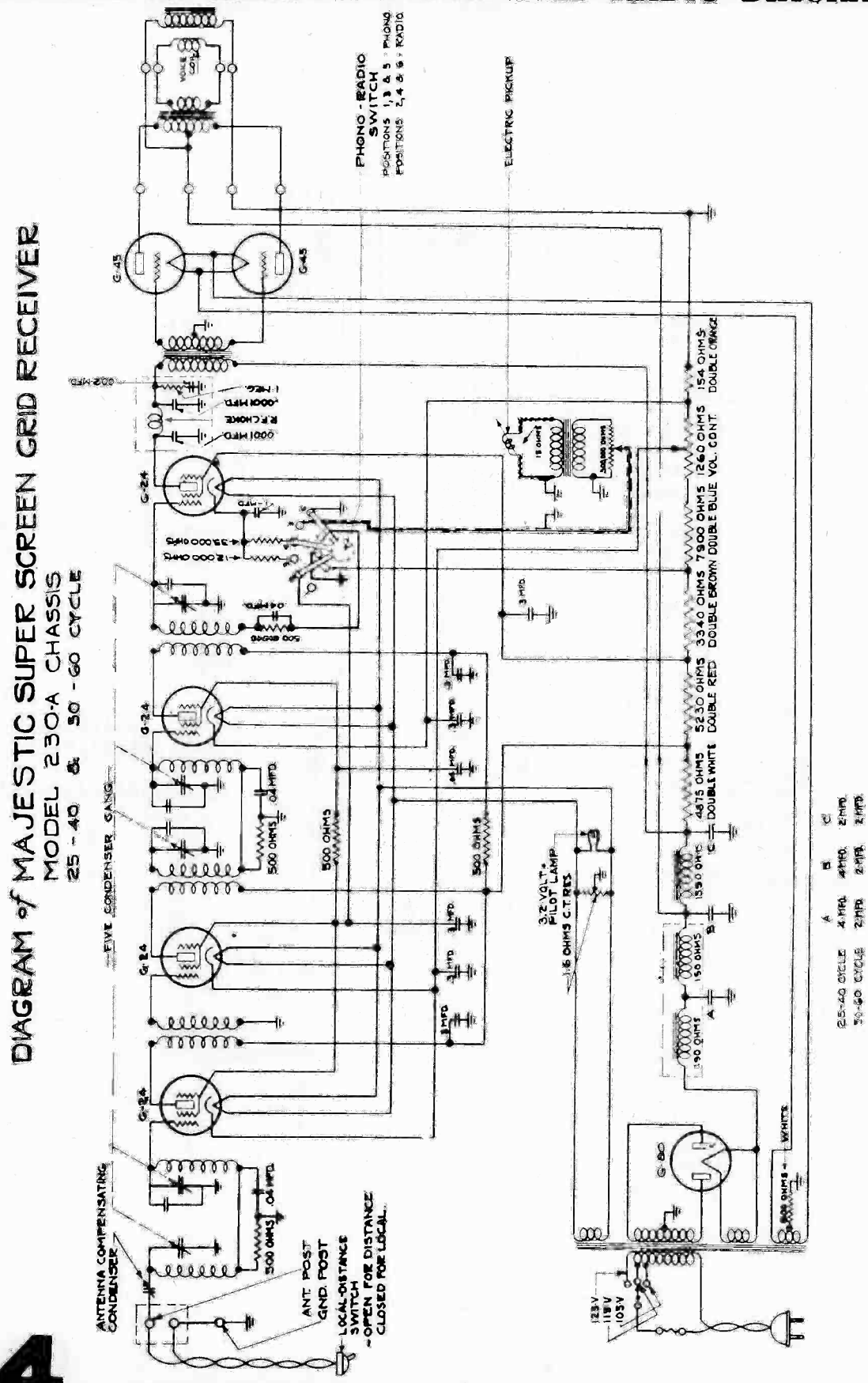
DIAGRAM of MAJESTIC SUPER SCREEN GRID RECEIVER
MODEL 230-A CHASSIS
25 - 40 & 50 - 60 CYCLE
PHONO - RADIO SWITCH
POSITIONS 1, 3 & 5 - PHONO
POSITIONS 2, 4 & 6 - RADIO
ELECTRIC PICKUP
VOICE COIL
G-45
G-45
.002 MFD.
1 MEG.
.0001 MFD.
R.F. CHOKE
.0001 MFD.
G-24
G-24
G-24
G-24
G-24
FIVE CONDENSER GANG
.04 MFD.
500 OHMS
500 OHMS
500 OHMS
500 OHMS
.04 MFD.
ANTENNA COMPENSATING CONDENSER
ANT. POST
GND. POST
LOCAL-DISTANCE SWITCH
-OPEN FOR DISTANCE
CLOSED FOR LOCAL.
3.2 VOLT PILOT LAMP
.16 OHMS C.T. RES.
G-80
190 OHMS
150 OHMS
1590 OHMS
4875 OHMS DOUBLE WHITE
5230 OHMS DOUBLE RED
3340 OHMS DOUBLE BROWN
7900 OHMS DOUBLE BLUE
1260 OHMS VOL. CONT.
154 OHMS DOUBLE ORANGE
WHITE
800 OHMS
123V
115V
103V
25-40 CYCLE A 4 MFD. B 4 MFD. C 2 MFD.
50-60 CYCLE A 2 MFD. B 2 MFD. C 2 MFD.

DIAGRAM OF MAJESTIC SCREEN GRID SUPERHETERODYNE
AUTOMATIC VOLUME CONTROL RECEIVER MODEL 220 — 115 VOLTS 50-60 CYCLE

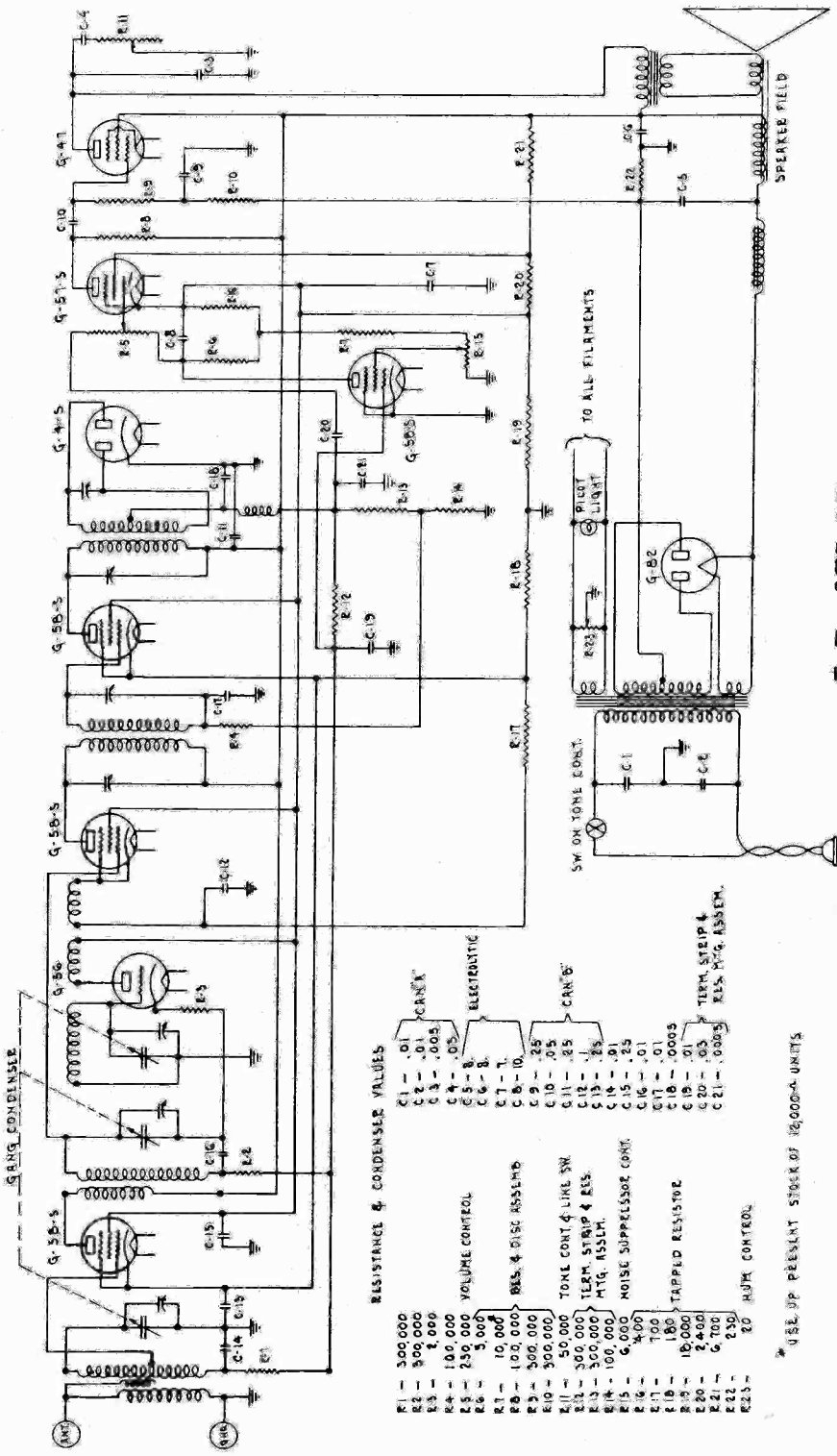

I.F. 175 KC.

DIAGRAM OF MAJESTIC AUTOMATIC VOLUME CONTROL SUPERHETERODYNE

MODEL 330

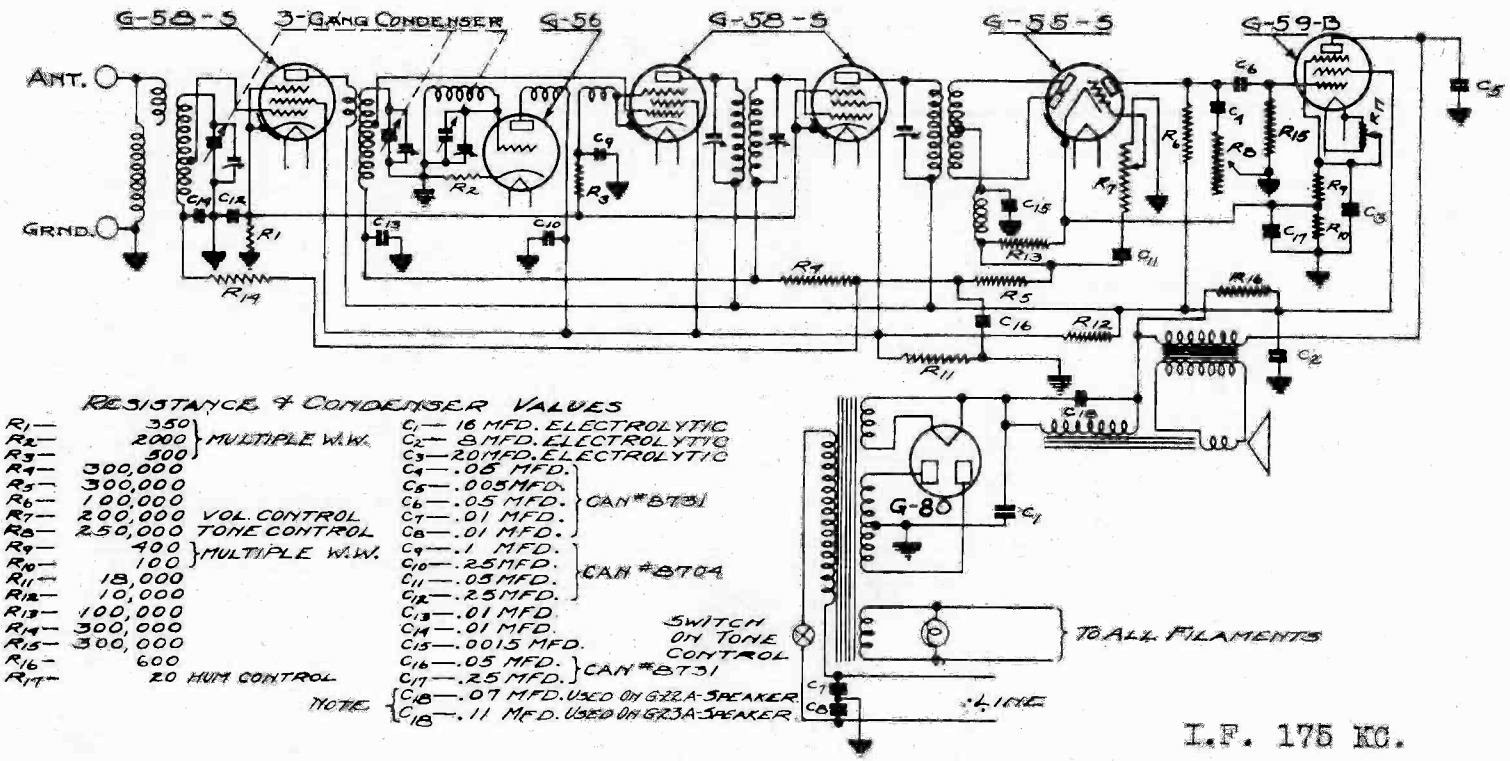

RESISTANCE & CONDENSER VALUES

R_1 —	350	MULTIPLE W.W.
R_2 —	2000	MULTIPLE W.W.
R_3 —	500	MULTIPLE W.W.
R_4 —	300,000	
R_5 —	300,000	
R_6 —	100,000	
R_7 —	200,000	VOL. CONTROL
R_8 —	250,000	TONE CONTROL
R_9 —	400	MULTIPLE W.W.
R_{10} —	100	MULTIPLE W.W.
R_{11} —	18,000	
R_{12} —	10,000	
R_{13} —	100,000	
R_{14} —	300,000	
R_{15} —	300,000	
R_{16} —	600	
R_{17} —	20	HUM CONTROL

C_1 —	16 MFD. ELECTROLYTIC
C_2 —	8 MFD. ELECTROLYTIC
C_3 —	20 MFD. ELECTROLYTIC
C_4 —	.05 MFD.
C_5 —	.005 MFD.
C_6 —	.05 MFD. CAN #8731
C_7 —	.01 MFD. CAN #8731
C_8 —	.01 MFD. CAN #8731
C_9 —	.1 MFD.
C_{10} —	.25 MFD. CAN #8704
C_{11} —	.05 MFD. CAN #8704
C_{12} —	.25 MFD. CAN #8704
C_{13} —	.01 MFD.
C_{14} —	.01 MFD.
C_{15} —	.0015 MFD.
C_{16} —	.05 MFD. CAN #8731
C_{17} —	.25 MFD. CAN #8731
NOTE C_{18} —	.07 MFD. USED ON G22A-SPEAKER
NOTE C_{18} —	.11 MFD. USED ON G23A-SPEAKER

Automatic volume control bias voltage is developed across resistors R-13 and R-10 and is applied to the grid of the radio frequency, first detector and intermediate frequency tubes to control their amplification.

The manual volume control is a 200,000 ohm potentiometer which is connected in the grid circuit of the G-55-S tube and works entirely independent of the automatic volume control.

SCHEMATIC DIAGRAM OF MAJESTIC MODEL 360 RECEIVER

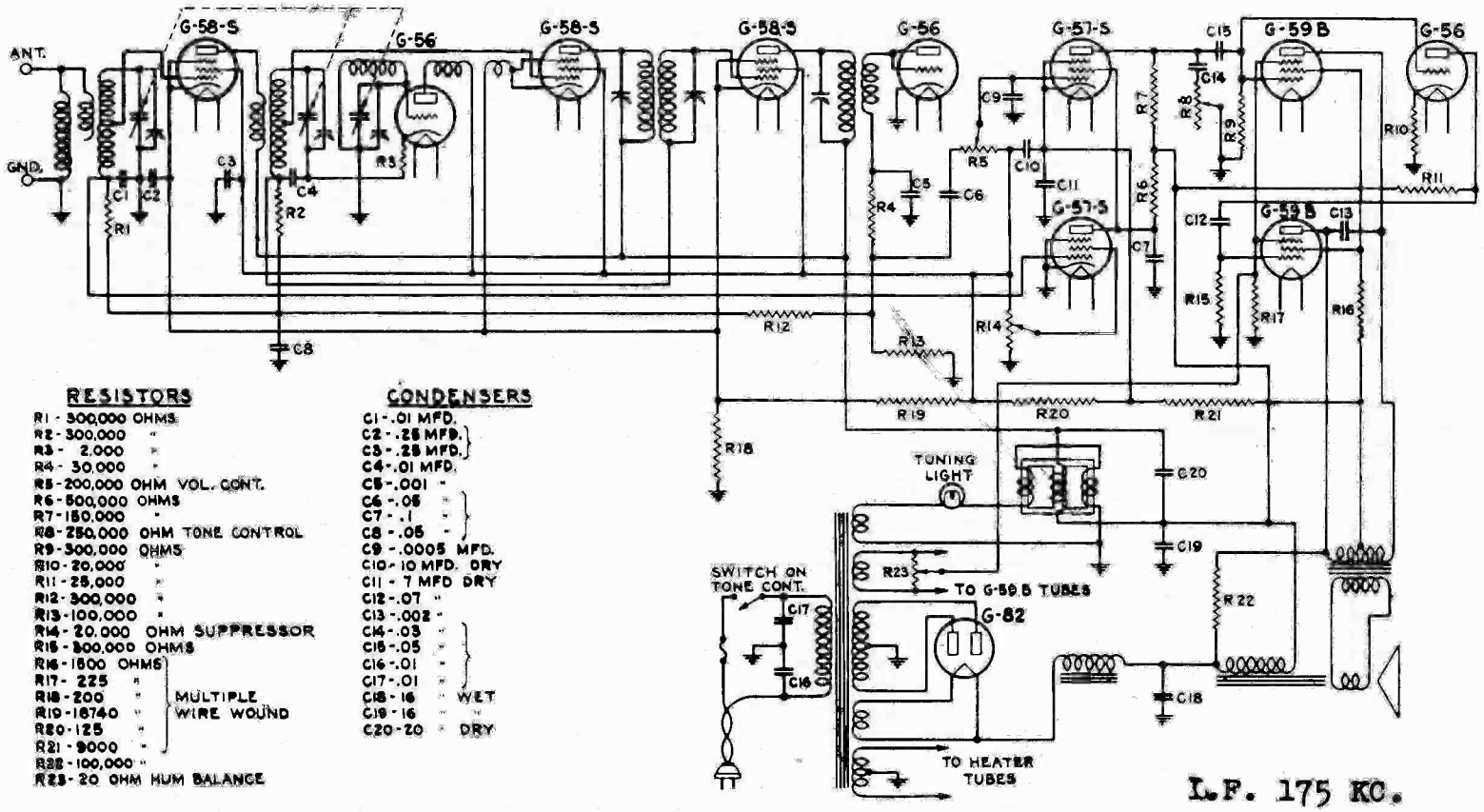

RESISTORS

R1 - 300,000 OHMS
R2 - 300,000 "
R3 - 2,000 "
R4 - 30,000 "
R5 - 200,000 OHM VOL. CONT.
R6 - 500,000 OHMS
R7 - 150,000 "
R8 - 250,000 OHM TONE CONTROL
R9 - 300,000 OHMS
R10 - 20,000 "
R11 - 25,000 "
R12 - 300,000 "
R13 - 100,000 "
R14 - 20,000 OHM SUPPRESSOR
R15 - 500,000 OHMS
R16 - 1500 OHMS
R17 - 225 "
R18 - 200 "
R19 - 18740 "
R20 - 125 "
R21 - 9000 "
R22 - 100,000 "
R23 - 20 OHM HUM BALANCE

MULTIPLE WIRE WOUND

CONDENSERS

C1 - .01 MFD.
C2 - .25 MFD.
C3 - .25 MFD.
C4 - .01 MFD.
C5 - .001 "
C6 - .05 "
C7 - .1 "
C8 - .05 "
C9 - .0005 MFD.
C10 - 10 MFD. DRY
C11 - 7 MFD DRY
C12 - .07 "
C13 - .002 "
C14 - .03 "
C15 - .05 "
C16 - .01 "
C17 - .01 "
C18 - 16 " WET
C19 - 16 " "
C20 - 20 " DRY

The Model 360 is an eleven tube chassis designed for single speaker operation in the Model 363 receiver. This chassis is very similar to the Model 300 chassis in that it provides Synchro-Silent Tuning, resistance coupled push-pull output, reactance dimmer action and automatic volume control. The tubes employed and their respective stages are as follows: G-58-S, R.F. amplifier; G-56, Oscillator: G-58-S, first detector; G-58-S, I.F. amplifier; G-56, second detector; G-57-S, first audio amplifier, G-57-S, suppressor; G-56, phase rotator; two G-59-B push-pull output and G-82 rectifier.

MODEL 400 CHASSIS

and

MODEL G-26-C SPEAKER

SCHEMATIC DIAGRAM OF MAJESTIC SCREEN GRID A.C.-D.C. SUPERHETERODYNE RECEIVER MODEL - 400

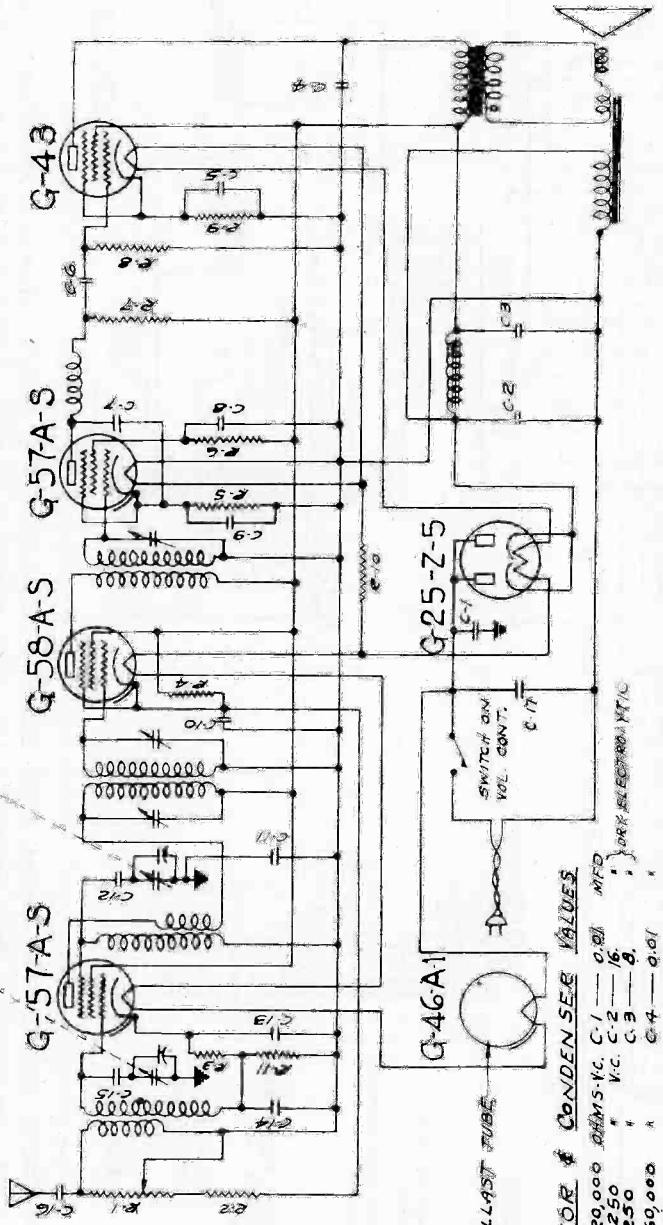

RESISTOR & CONDENSER VALUES

R-1	20,000 OHMS-V.C.	C-1 — 0.01 MFD
R-2	250 " V.C.	C-2 — 16. "
R-3	250 "	C-3 — 8. "
R-4	60,000 "	C-4 — 0.01 "
R-5	50,000 "	C-5 — 10. " DRY ELECTROLYTIC
R-6	1,000,000 "	C-6 — 0.10 "
R-7	500,000 "	C-7 — 0.0005 "
R-8	500,000 "	C-8 — 0.10 "
R-9	700 "	C-9 — 0.25 "
R-10	500 "	C-10 — 0.25 "
R-11	2,000 "	C-11 — 0.25 "
		C-12 — 0.01 MFD
		C-13 — 0.25 "
		C-14 — 0.10 "
		C-15 — 0.01 "
		C-16 — 0.001 "
		C-17 — 0.10 "

1 - With the volume control in maximum volume position and the gang condenser completely out of mesh, supply a 456 K.C. signal to the grid of the modulator tube and adjust the 4 I.F. tuning condensers for maximum sensitivity.

ALIGNMENT PROCEDURE

2 - With the gang condenser and volume control in the same position, supply a 1730 K.C. signal to the input of the receiver and align the 2 R.F. trimmer condensers for maximum sensitivity.

SCHEMATIC DIAGRAM OF MAJESTIC SCREEN GRID A.C.-D.C. SUPERHETERODYNE RECEIVER MODEL-400-A

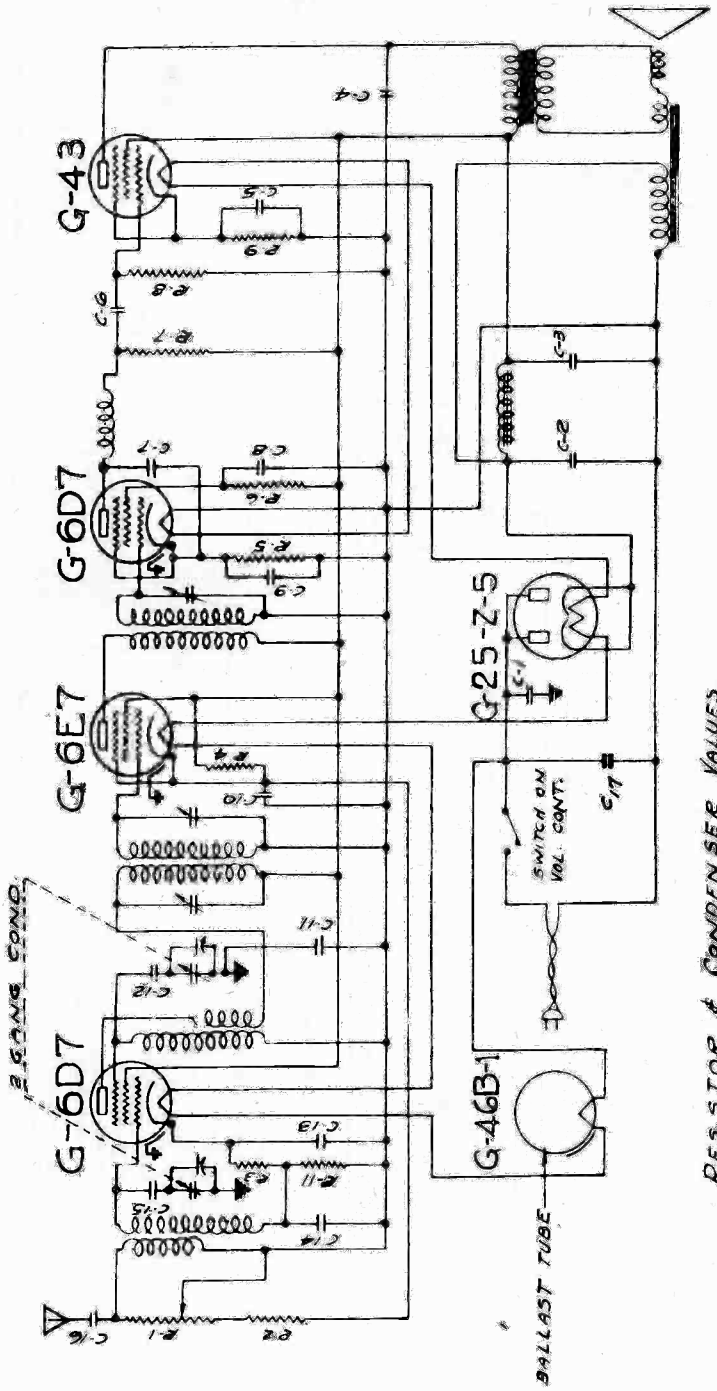

The circuit of the Model 400-A chassis is practically the same as that of the Model 400. The main differences being that the types G-6D7 and G-6E7 tubes are used in place of types G-57A-S and G-58A-S respectively; and that a type G-46A-1 tube is used as a ballast in place of the G-46B-1.

Resistors R-3 and R-11 have a value of 160 and 2500 ohms respectively in the Model 400-A chassis while they have a value of 250 and 200 ohms in the Model 400 chassis. Resistor R-10 is omitted entirely.

SCHEMATIC DIAGRAM OF MAJESTIC MODEL-460 RECEIVER

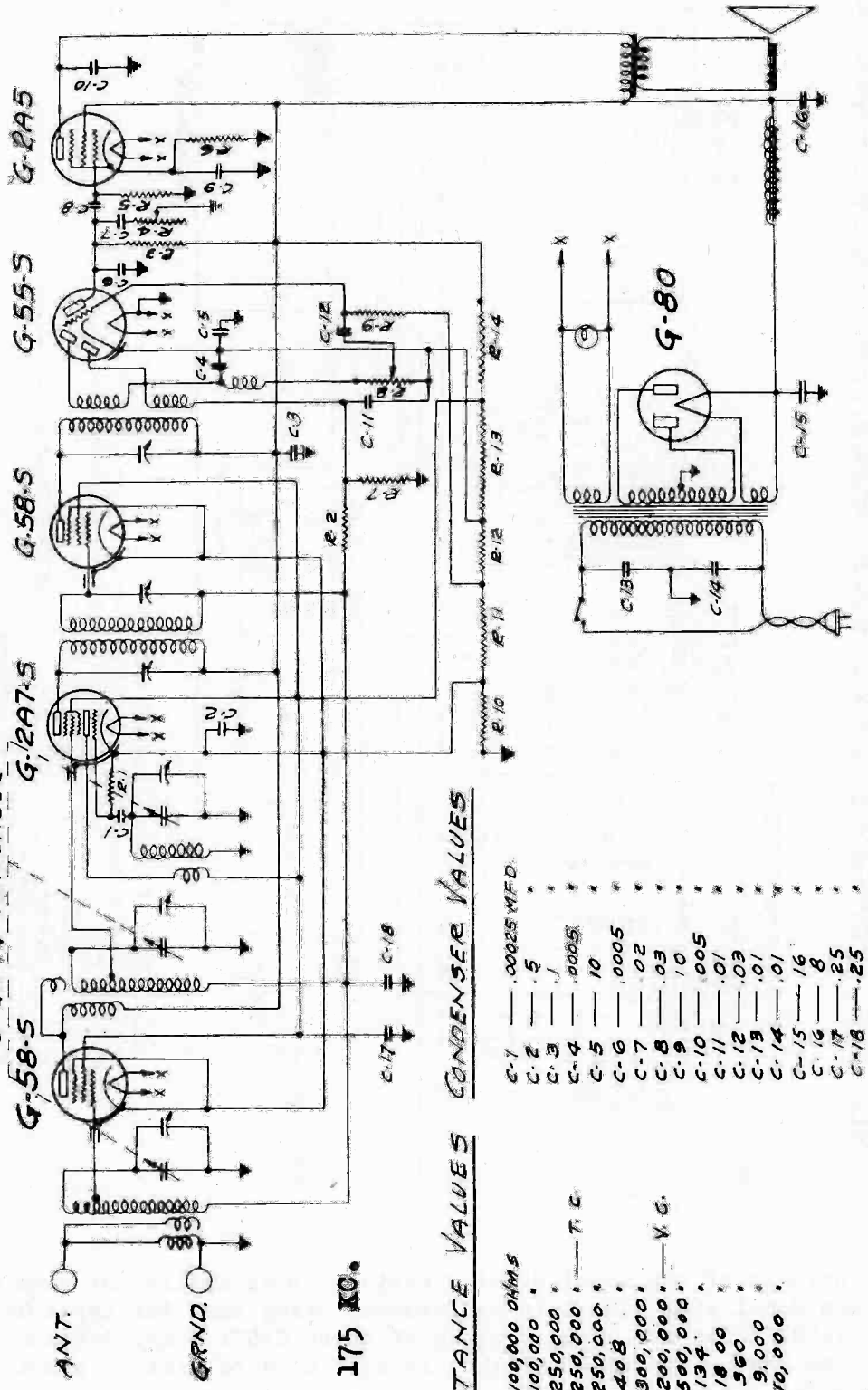

RESISTANCE VALUES

R-1	100,000 OHMS	
R-2	100,000 "	
R-3	250,000 "	T.C.
R-4	250,000 "	
R-5	250,000 "	
R-6	408 "	
R-7	300,000 "	V.C.
R-8	200,000 "	
R-9	500,000 "	
R-10	134 "	
R-11	18.00 "	
R-12	560 "	
R-13	9,000 "	
R-14	10,000 "	

CONDENSER VALUES

C-1	.0025 MFD.
C-2	.5 "
C-3	.1 "
C-4	.0005 "
C-5	10 "
C-6	.0005 "
C-7	.02 "
C-8	.03 "
C-9	10 "
C-10	.005 "
C-11	.01 "
C-12	.03 "
C-13	.01 "
C-14	.01 "
C-15	16 "
C-16	8 "
C-17	.25 "
C-18	.25 "

COMPILED BY M. N. BEITMAN, SUPREME PUBLICATIONS

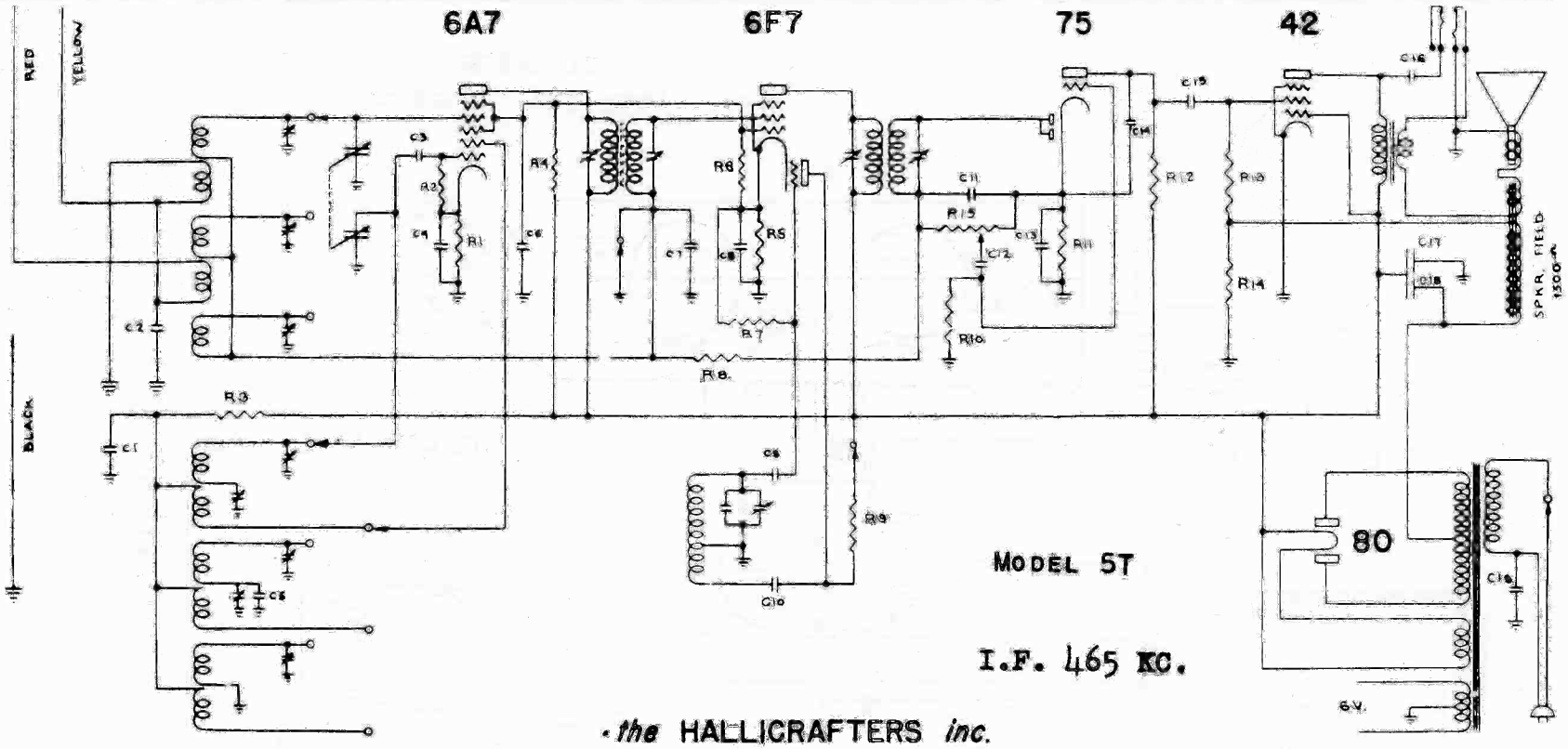

MODEL 5T

I.F. 465 KC.

·*the* HALLICRAFTERS *inc.*

SKY BUDDY

C1	.1	400
C2	10 mmf	
C3	100 mmf	
C4	.1	200
C5	1000 mmf	
C6	.1	400
C7	.05	200
C8	.1	200
C9	250	
C10	.01	400
C11	250 mmf	
C12	.01	400
C13	.1	200
C14	250 mmf	
C15	.01	400
C16	.05	400
C17	8.mfd	
C18	4.mfd	
C19	.01	400

R1	250
R2	30,000
R3	25,000
R4	25,000
R5	200
R6	25,000
R7	100,000
R8	1 meg
R9	100,000
R10	1 meg
R11	4000
R12	250,000
R13	400,000
R14	250

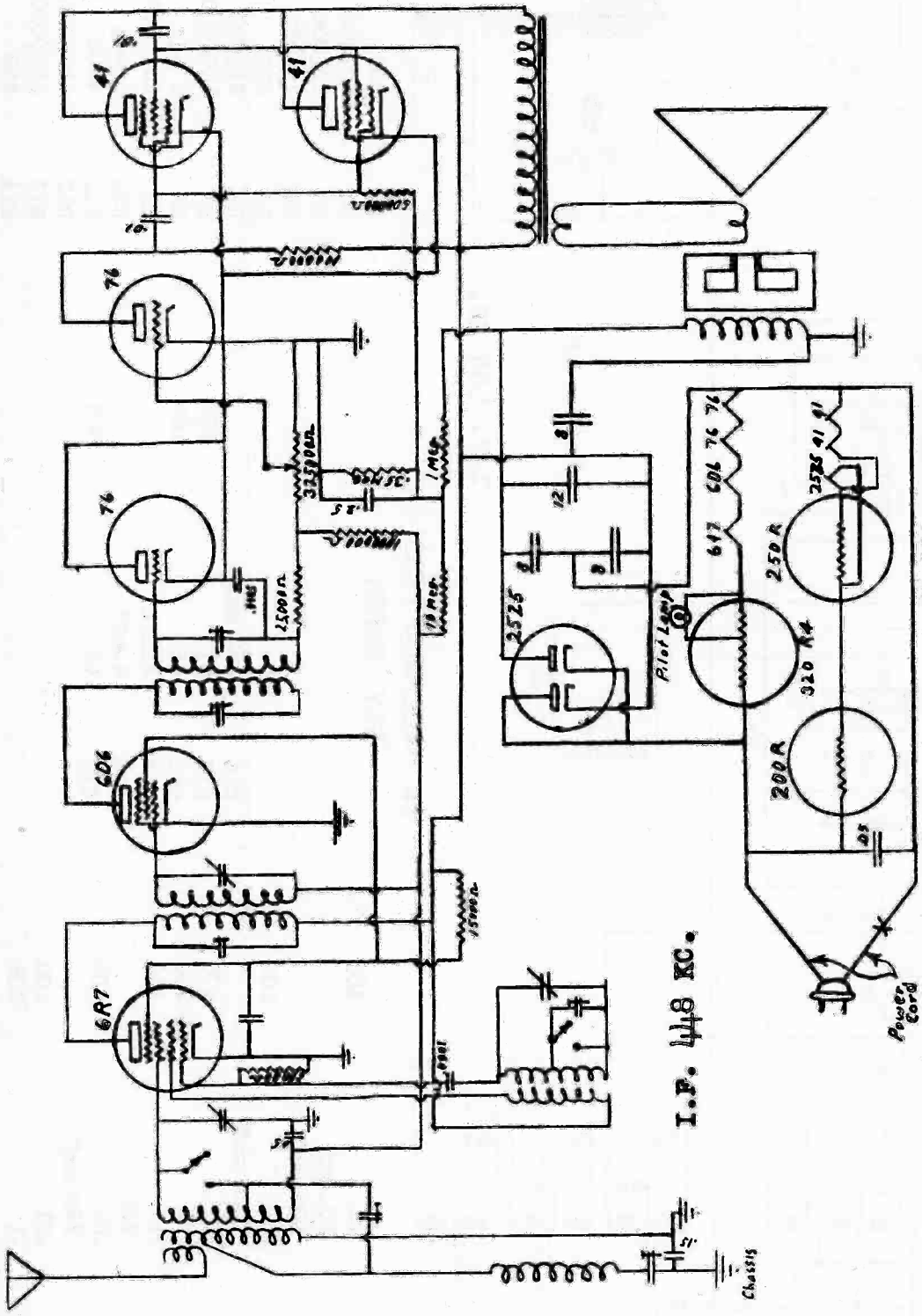

International Radio Corp.
Model 1019

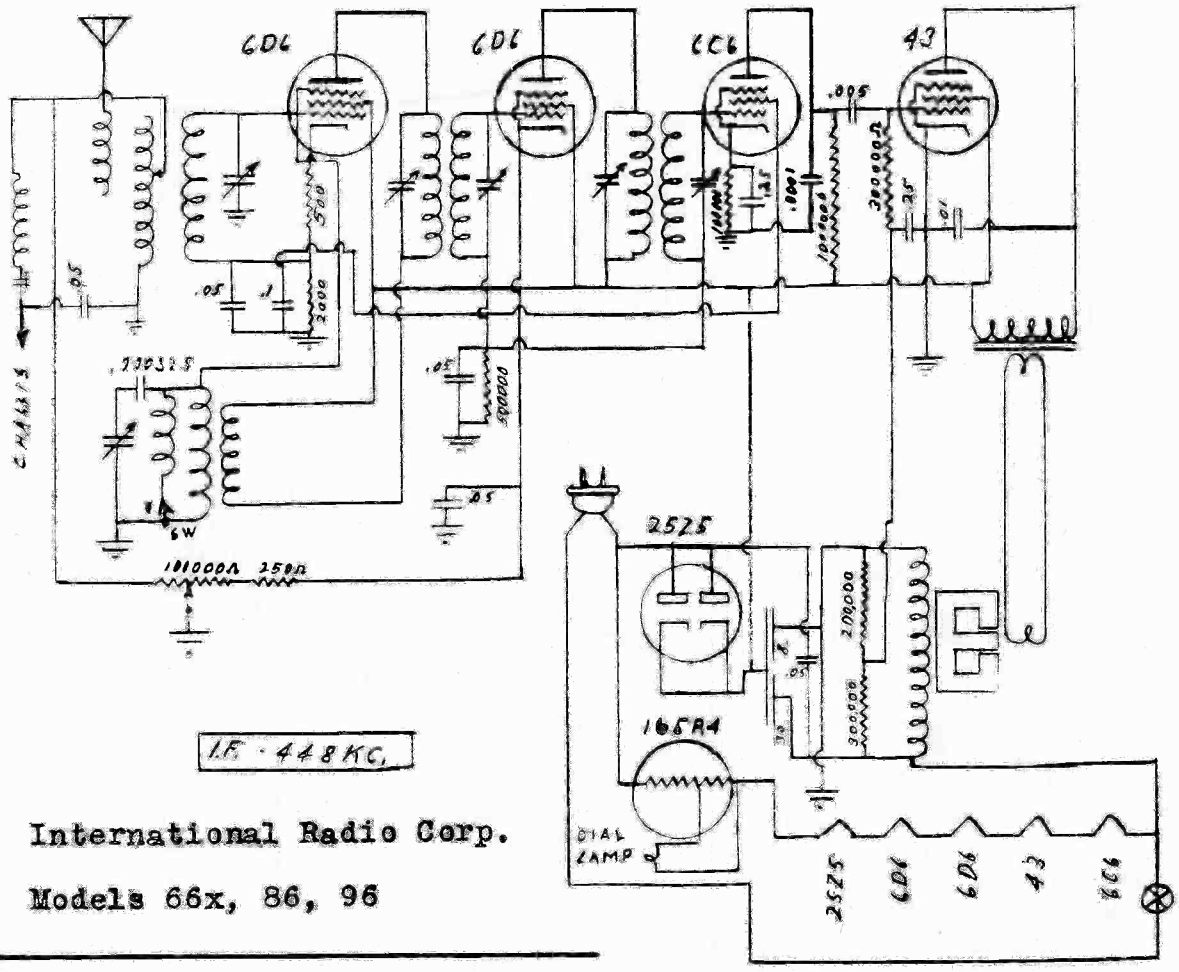

International Radio Corp.

Models 66x, 86, 96

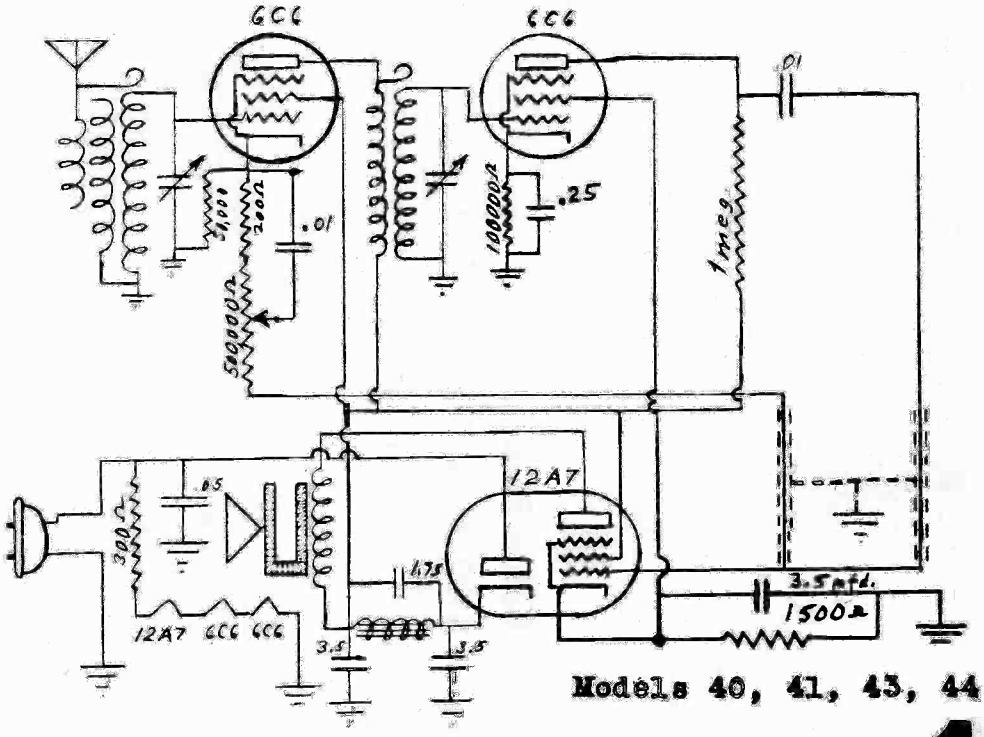

Models 40, 41, 43, 44

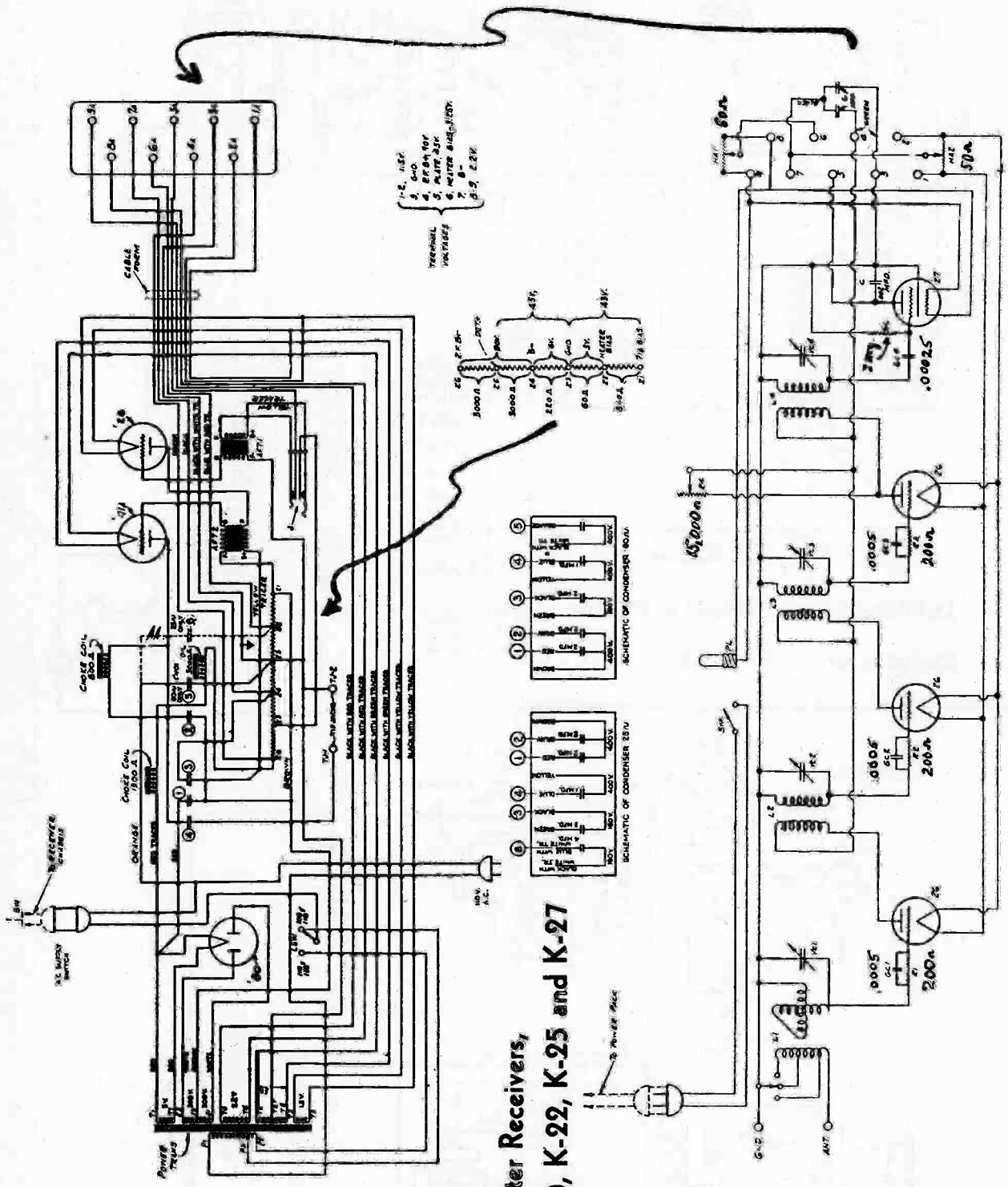

Kolster Receivers, Models K-20, K-22, K-25 and K-27

MANUAL OF MOST-OFTEN-NEEDED RADIO DIAGRAMS

Simplified Radio Servicing by COMPARISON Method

Repair radios in minutes instead of hours. Revolutionary different COMPARISON technique permits you to do expert work on all radio sets. Most repairs can be made without test equipment or with only a volt-ohmmeter. Many simple, point-to-point, cross-reference, circuit suggestions locate the faults instantly. Plan copyrighted. Covers every radio set—new and old models. This new servicing technique presented in handy manual form, size 8½x11 inches, 72 pages. Over 1,000 practical service hints. 26 large, trouble-shooting blueprints. Charts for circuit analysis. 114 tests using a 5c resistor. Developed by M. N. Beitman. New 1945 edition. Net Price **$1.50**

Supreme Publications

PUBLISHERS OF RADIO BOOKS, MANUALS, AND DIAGRAMS

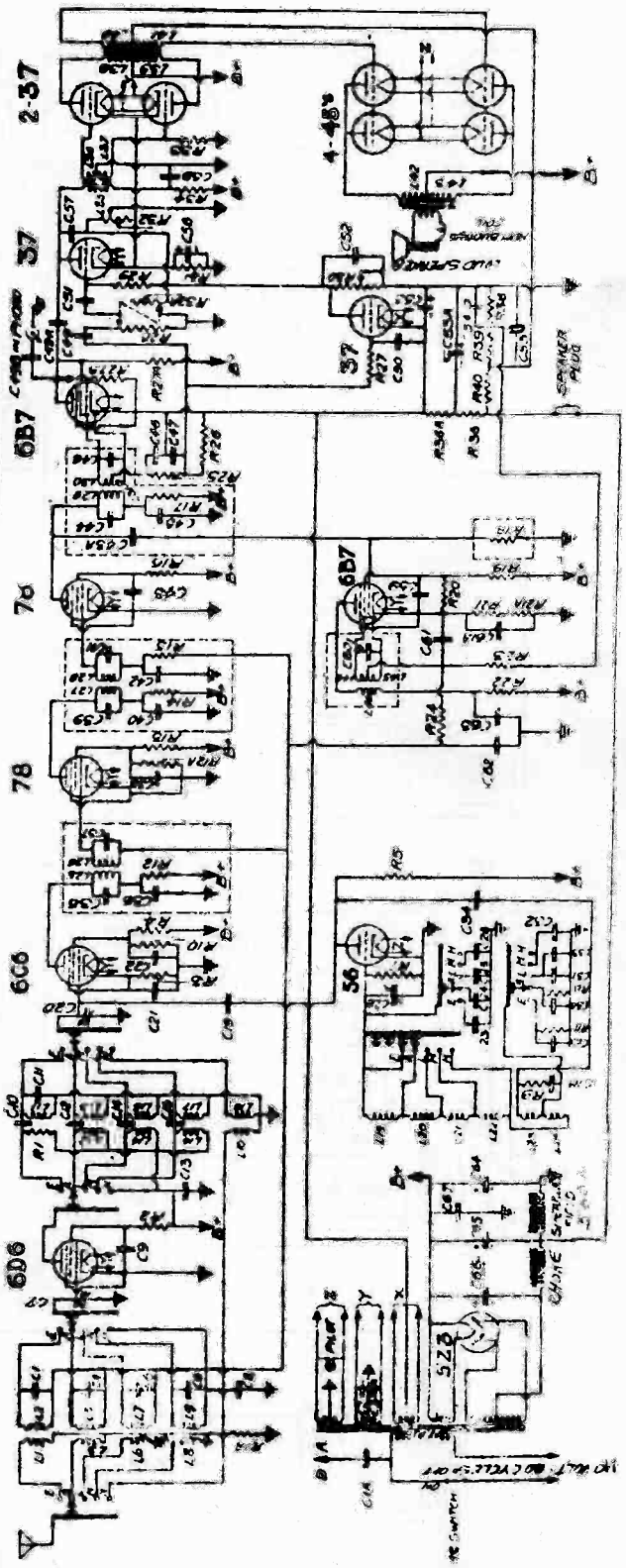

C1A	250 MMFD	MICA	
C1	80	TRIMMER	
C2	.05 MFD	200 VOLT	
C3	.05	20	
C4	20 MMFD	TRIMMER	
C5	20		
C6	20		
C7	365	TUNING CONDENSER	
C8	.05 MFD	200 VOLT	
C9	.05	400	
C10	25 MMFD	MICA	
C11	80	TRIMMER	
C12	20		
C13	.05 MFD	400 VOLT	
C14	20 MMFD	TRIMMER	
C15	20		
C16	25	MICA	
C19	20	TRIMMER	
C20	365	TUNING CONDENSER	
C21	.05 MFD	200 VOLT	
C22	.05	200	
C23	80 MMFD	TRIMMER	
C24	20		
C25	20		
C26	20		
C28	365	TUNING CONDENSER	
C29	160	PADDER	
C30	340		
C31	700		
C32	3000	MICA	
C33	500		
C34	2000		
C35	I.F.T.	TRIMMER	
C36	.05 MFD	400 VOLT	
C37	I.F.T.	TRIMMER	
C38	.05 MFD	400 VOLT	
C39	I.F.T.	TRIMMER	
C40	.05 MFD	400 VOLT	
C41	I.F.T.	TRIMMER	
C42	.05 MFD	200 VOLT	
C43	.05	400	
C43A	25 MMFD	MICA	
C44	I.F.T.	TRIMMER	
C45	.05 MFD	400 VOLT	
C46	250 MMFD	MICA	DUAL
C47	250	MICA	
C48	I.F.T.	TRIMMER	
C49	.05 MFD	200 VOLT	
C49A	.05	400	
C49B	.05	200	INTERFERENCE
C50	.05	200	
C51	.25	200	
C52	.01	200	
C53	25	50	
C53A	10	35	
C54	.05	200	
C55	25	50	
C56	10	25	
C57	.05	400	
C58	1	300	
C59	.05	400	
C60	I.F.T.	TRIMMER	
C61	.001 MFD	600 VOLT	
C61A	.05	200	
C62	.001	600	
C63	.05	400	
C64	8	ELECTROLYTIC	
C65	8		
C66	8		
C67	.25	400 VOLT	
R10	5 000	.25	WATT
R1	75 000	.25	
R2	200 000	.25	
R3	5 000	.25	
R4	50 000	.50	
R5	15 000	1	
R7	500 000	.25	
R8	200 000	.25	
R9	1 000	.25	
R10	10 000	.25	
R11	50 000	.25	
R12	5 000	.25	
R12A	100 000	.25	
R13	200 000	.25	
R14	5 000	.25	
R15	3 MEG	.25	
R16	200 000	.25	
R17	5 000	.25	
R18	3 MEG	.25	
R19	25 000	.5	
R20	50 000	.5	
R21	4 000	.25	
R21A	4 000	.25	
R22	5 000	.25	
R23	500 000	.25	
R24	100 000	.25	
R25	100 000	.25	
R26	500 000	.25	
R27	500 000	.25	
R27A	500 000	.5	
R27B	100 000	.25	
R28	500 000		POT VOLUME CONTROL
R29	300 000	.25	WATT
R30	50 000		POT SCRIPT-O-POT CONTROL
R31	700		FLEXIBLE
R32	50 000		VARIABLE TONE CONTROL
R32A	50 000		MAGNETIC TONE COMPENSATION
R33	10 000	.25	WATT
R34	15 000	1	
R35	25 000	.25	
R35A	25 000	.25	
R36	10 000	.25	
R37	100 000	.25	
R38	50 000	.25	

THE MIDWEST RADIO CORP.
909 BROADWAY CINCINNATI, OHIO.

SCHEMATIC CIRCUIT DIAGRAM
OF THE
MODEL 16-34 SET

I.F. 450 KC.

COMPILED BY M. N. BEITMAN, SUPREME PUBLICATIONS

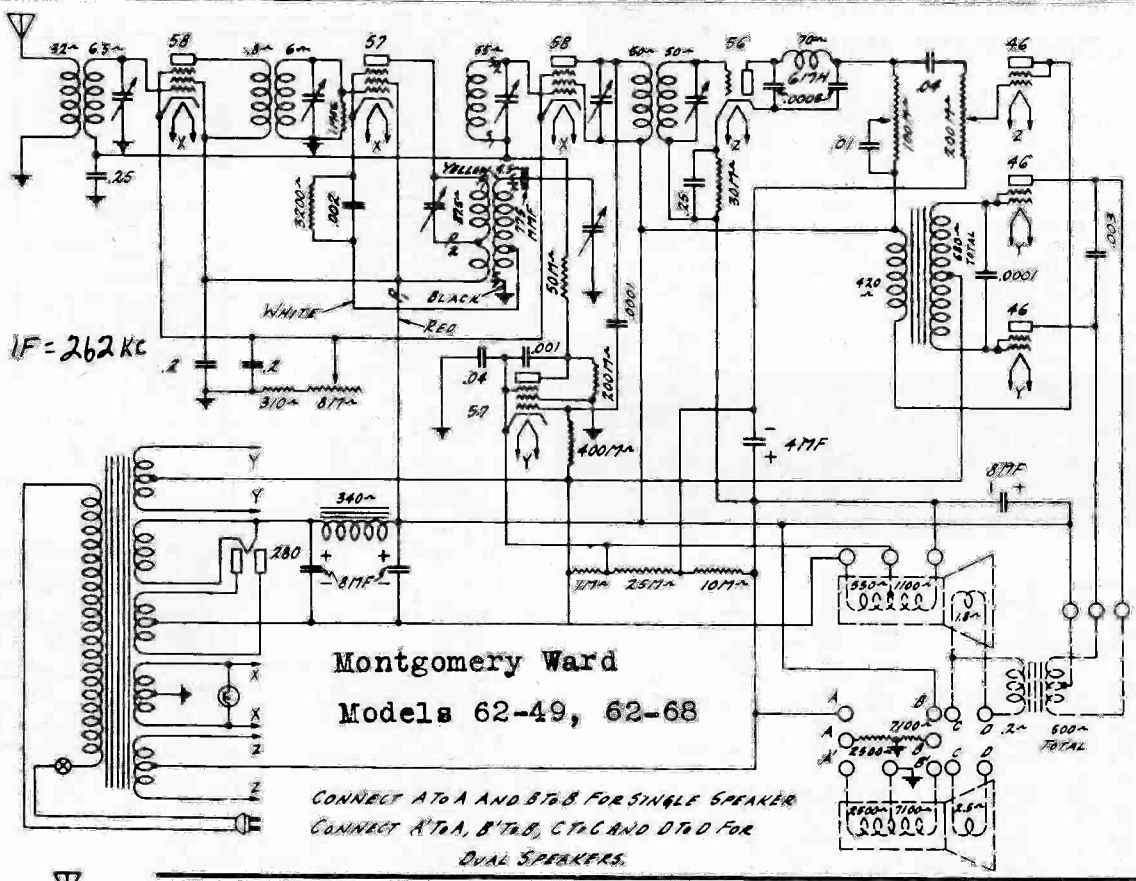

Montgomery Ward

Models 62-49, 62-68

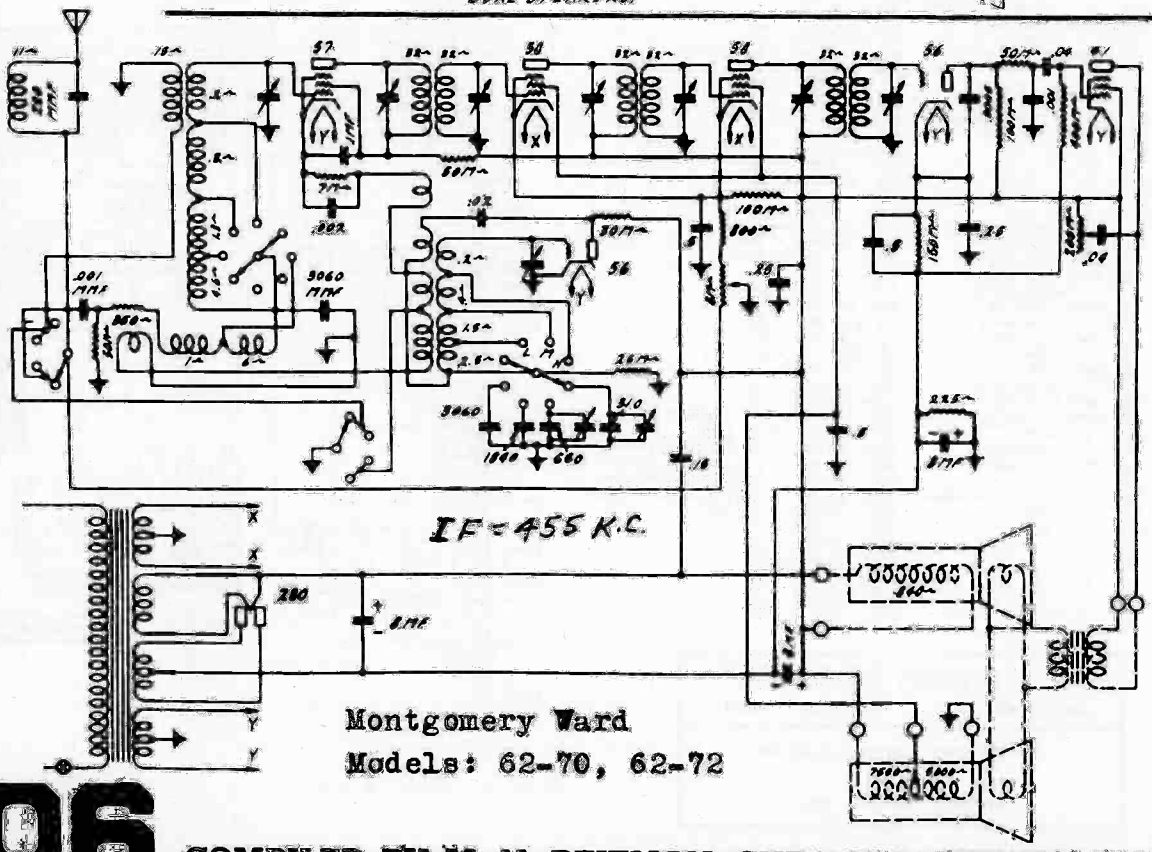

Montgomery Ward

Models: 62-70, 62-72

MONTGOMERY WARD & CO.

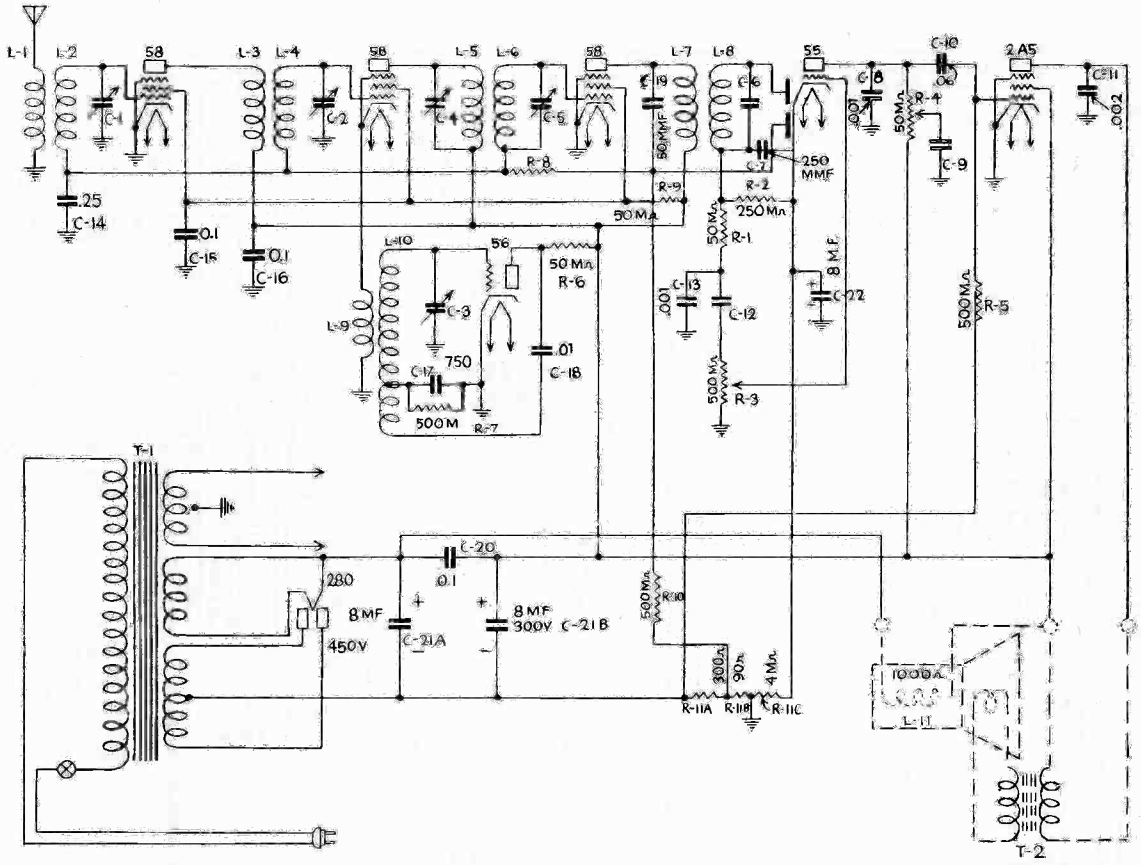

No. 62-99 AND 62-97

Circuit

The complete circuit consists of a type 58 tube functioning as an R. F. Amplifier, followed by another type 58 tube operating as a 1st detector, or mixer tube. A type 56 tube is used as an oscillator.

The I. F. amplifier utilizes a type 58 tube and is followed by the type 55 tube described above, functioning as a second detector, A. V. C. and first audio amplifier. A type 2A5 is used in the power audio stage.

The 58 R. F. Amplifier Tube is inductively coupled to the antenna by means of the antenna transformer, L-1, L-2, the secondary of which is tuned by one section of the three gang Tuning Condenser.

The second R. F. or first detector transformer provides inductive coupling between the plate circuit of the 58 R. F. Tube and grid circuit of the 58 1st Detector Tube. The secondary of this transformer is tuned by the second section of the three gang Tuning Condenser.

The stage of R. F. amplification consisting of the 58 R. F. Tube, together with its associated R. F. Transformers serves the double purpose of increasing the sensitivity and selectivity of the receiver as well as practically eliminating image or double frequency response.

Grid bias for the 58 R. F. Tube is variable and is controlled by the A. V. C. diode in accordance with the strength of the incoming signal.

A type 58 Tube is used as a first detector or mixer which is of the bias type. The grid bias of this tube is also controlled by the A. V. C.

The oscillator is of the tuned grid type and is tuned by the third section of the three gang Tuning Condenser.

The oscillator frequency is exactly 262 K. C. above the frequency of the received signal. To provide that the oscillator shall track accurately it is provided with a 675 Mmf. Series Padder Condenser, C-17, and also a shunt trimmer condenser which allows accurate alignment at high frequencies.

Voltages at Sockets

Line Voltage 115—Volume Control at Maximum

Type of Tube	Position of Tube	Function	"A" Volts	"B" Volts	Control Grid "C" Volts	Screen Grid Volts	Screen Current MA	Plate Current MA	Cathode Volts
56	1	Osc.	2.3	110	15–30(1)	.....	.....	3–3.4(1)	0
58	2	R. F.	2.3	260	2.0(2)	90(3)	1.2	4.8	0
58	3	1st Det.	2.3	260	2.0(2)	90(3)	1.3	5.4	0
58	4	I. F.	2.3	260	2.0(2)	90(3)	1.2	4.6	0
55	5	2nd Det. AVC-1st Audio	2.3	Diode 1-0 Diode 2-3 Triode 135	2.0(5)	.....	.....	4.6	12
2A5	6	Power	2.3	255	3.0(6)	260	.....	.....	0
80	7	Rectifier	4.8	.....	.....	.....	.....	26 Per Plate	.....

(1)Varies with frequency approximately as shown.
(2)Voltage as read with 60,000 ohm meter—across 90 ohm section of R-11—50 volts.
(3)Voltage as read with 600,000 ohm meter.
(4)Not actual voltage due to resistance in circuit—tone voltage—17 volts.
(5)Voltage as read with 60,000 ohm meter—across 4000 ohm section of R-11—12 volts.
(6)Voltage as read with 60,000 ohm meter—across 300 and 90 ohm section of R-11—22 volts.

Montgomery Ward Models 62-185, 62-187, 62-190, 62-196

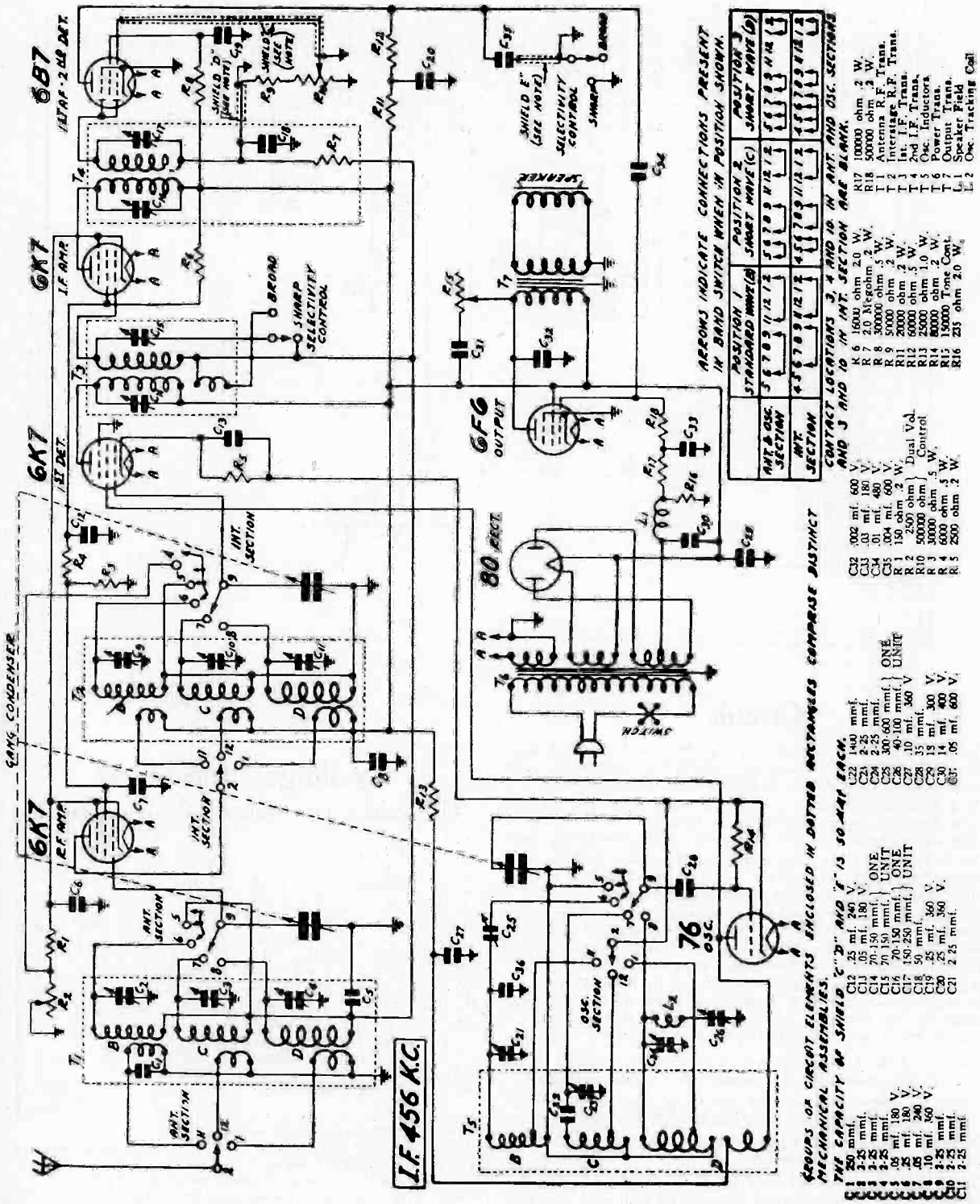

Montgomery Ward Radio Model 62-233

DESCRIPTION

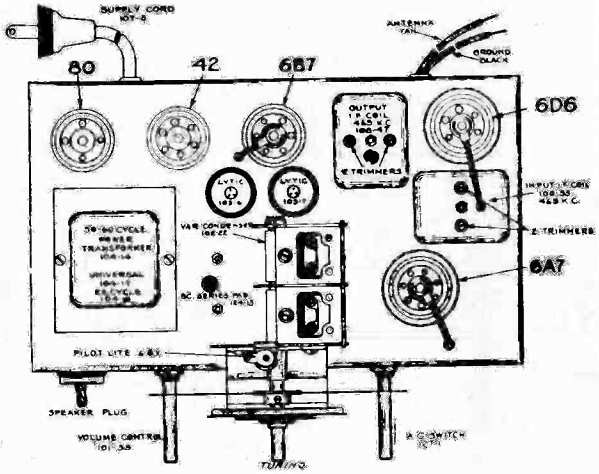

Tubes

The Tube complement of this chassis is as follows:

1 Type 6A7—pentagrid electron coupled oscillator and first detector.
1 Type 6D6—remote cut-off pentode as I.F. amplifier.
1 Type 6B7—duplex diode pentode as diode detector, A.V.C. and A.F.
1 Type 42—pentode output tube.
1 Type 80—high vacuum rectifier.

Voltages taken from different points of circuit to chassis are measured with volume control full on, all tubes in their sockets and speaker connected, with a volt meter having a resistance of 1000 ohms per volt. These voltages are clearly indicated on the circuit diagram

All voltages are measured with 119 volts on the primary of the power transformer.

Resistance of coils and transformer windings are indicated in ohms on schematic circuit diagram.

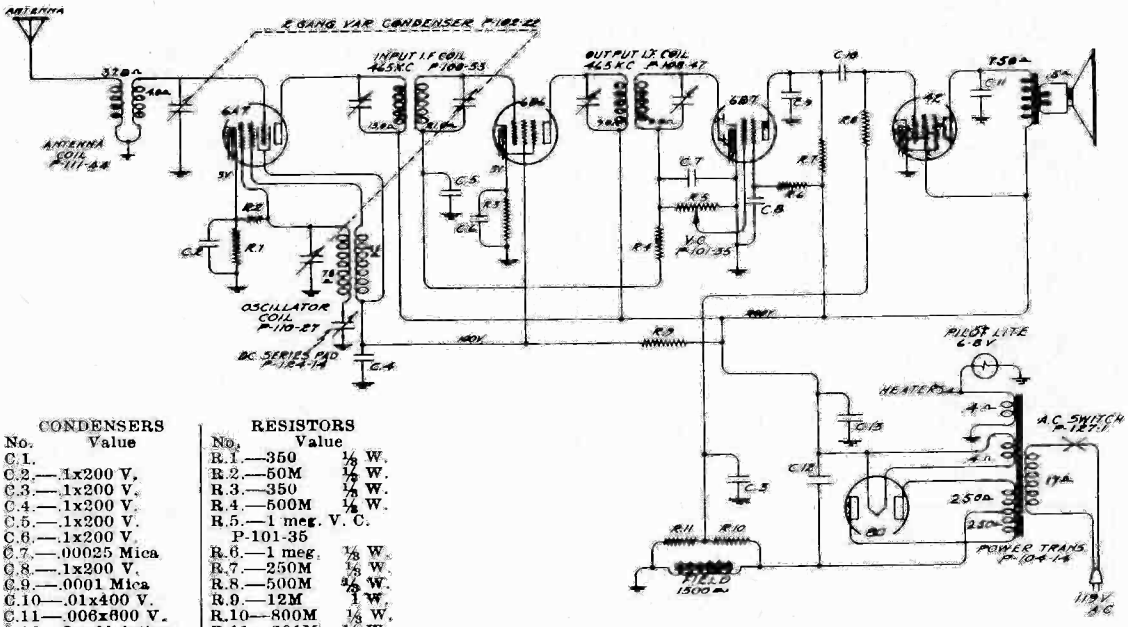

CONDENSERS No.	Value
C.1.	
C.2.—	.1x200 V.
C.3.—	.1x200 V.
C.4.—	.1x200 V.
C.5.—	.1x200 V.
C.6.—	.1x200 V.
C.7.—	.00025 Mica
C.8.—	.1x200 V.
C.9.—	.0001 Mica
C.10—	.01x400 V.
C.11—	.006x600 V.
C.12—	8 mfd. lytic x 350 V.—P-103-6
C.13—	8 mfd. lytic x 300 V.—P-103-7

RESISTORS No.	Value	
R.1.—	350	1/8 W.
R.2.—	50M	1/8 W.
R.3.—	350	1/8 W.
R.4.—	500M	1/8 W.
R.5.—	1 meg. V. C. P-101-35	
R.6.—	1 meg.	1/8 W.
R.7.—	250M	1/8 W.
R.8.—	500M	5/8 W.
R.9.—	12M	1 W.
R.10—	800M	1/8 W.
R.11—	201M	1/8 W.

Service Notes

To check for open by-pass condensers, shunt each condenser with another of similar capacity and of the same voltage rating, which is known to be good, until the defective unit is located. Open by-pass condensers frequently cause oscillation and distorted tone. Defective and shorted electrolytic filter condensers cause excessive hum, motor-boating, low volume and a reduction in all D.C. voltages. Open or shorted electrolytic and by-pass condensers (across bias resistor of type 42 tube) will cause low volume and distorted tone.

MANUAL OF MOST-OFTEN-NEEDED RADIO DIAGRAMS

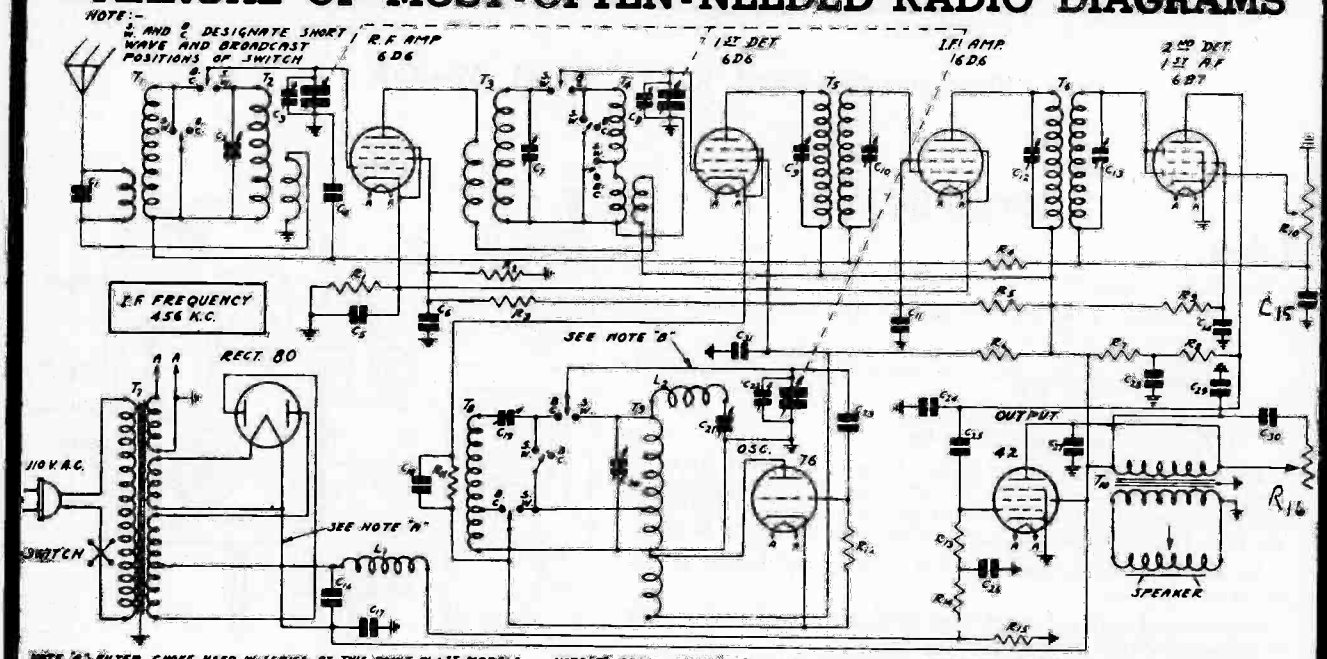

Montgomery Ward Models 62-123, 62-131, 62-133, 62-142, 62-144, 62-152,

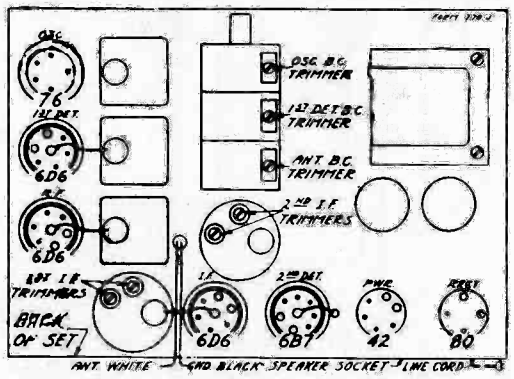

Voltages at Sockets

LINE VOLTAGE — 115

ANTENNA SHORTED TO GROUND

Type of Tube	Function	Across Fila. or Heater	Plate to Cath.	Screen to Cath.	Control Grid to Cath.	Normal Plate M. A.
6D6	R. F.	6.3	246	100	3.6(1)	5.3
6D6	1st Det.	6.6	237	97	8.0(2)	3.4
76	Osc.	6.3	115		0	4.8
6D6	I. F.	6.3	246	130	3.6(1)	8.3
6B7	2nd Det.	6.3	50(3)	40(3)	0	2.7
42	Power	6.3	230	245	17.0(4)	33.0
80	Rectifier	5.0				37.0 per plate

(1) Cathode to ground
(2) Subject to variation
(3) Read with 1,000,000 ohm meter
(4) As read across R15

Code	Capacity	Volts	Type
C1	.00025 mfd.		Moulded
C2	3-40 mmfd.		Ant. S. W. Trimmer
C3	(See 3 Gang Cond.)		Gang Trimmer
C4	.05 mfd.	200V.	Tubular
C5	.25 mfd.	200V.	Tubular
C6	.05 mfd.	400V.	Tubular
C7	3-40 mmfd.		1st Det. S. W. Trim
C8	(See 3 Gang Cond.)		Gang Trimmer
C9	90±30 mmfd.		Dual Trimmer
C10	90±30 mmfd.		Part of I. F. Assem.
C11	.25 mfd.	300V.	Tubular
C12	90±30 mmfd.		Dual Trimmer
C13	90±30 mmfd.		Part of I. F. Assem.
C14	.25 mfd.	400V.	Tubular
C15	.0001 mfd.		Moulded
C16	18.0 mfd.	300V.	Electrolytic Wet
C16	8.0 mfd.	450V.	Electrolytic Wet
C17	8.0 mfd.	500V.	Electrolytic Wet
C17	14.0 mfd.	400V.	Electrolytic Wet
C18	.05 mfd.	200V.	Tubular
C19	300-500 mmfd.		600 K. C. Trimmer
C20	3-40 mmfd.		Osc. S. W. Trimmer
C21	70±30 mmfd.		6000 K. C. Trimmer
C22	(See 3 Gang Cond.)		Gang Trimmer
C23	.000035 mfd.		Moulded
C24	.002 mfd.	600V.	Tubular
C25	.01 mfd.	400V.	Tubular
C26	.03 mfd.	400V.	Tubular
C27	.002 mfd.	600V.	Tubular
C28	.25 mfd.	400V.	Tubular
C29	.1 mfd.	400V.	Tubular
C30	.05 mfd.	400V.	Tubular
C31	.1 mfd.	400V.	Tubular

Code	Resistance	Watts	Type
R1	200 ohm	.2	Flex. Wire Wound
R2	30,000 ohm	.5	Carbon
R3	6,000 ohm	.5	Carbon
R4	2.0 megohm	.2	Carbon
R5	16,000 ohm	1.5	Armored
R6	25,000 ohm	1.0	wire wound
R7	20,000 ohm	.2	Carbon
R8	60,000 ohm	.5	Carbon
R9	250,000 ohm	.5	Carbon
R10	500,000 ohm		Vol. Control & Switch
R11	2,500 ohm	.2	Carbon
R12	100,000 ohm	.2	Carbon
R13	500,000 ohm	.2	Carbon
R14	100,000 ohm	.2	Carbon
R15	235 ohm	2.0	Flex. Wire Wound
R16	150,000 ohm		Tone Control

COMPILED BY M. N. BEITMAN, SUPREME PUBLICATIONS

WARDS AIRLINE RADIO

MODELS 62-425 and 62-265

The tube complement of this chassis is as follows:

1 Type 6A7—pentagrid oscillator and first detector.
1 Type 78 —remote cut-off pentode as I.F. amplifier.
1 Type 75 —duplex diode triode as diode detector, A.V.C. and A.F.
1 Type 41—pentode output tube.
1 Type 5Z4 or 5Y3—high vacuum rectifier.

ALIGNING INSTRUCTIONS:

CAUTION:—No aligning adjustments should be attempted without first thoroughly checking over all other possible causes of trouble, such as poor installations, open or grounded antenna systems, low line voltages, defective tubes, condensers and resistors. In order to properly align this chassis, an oscillator (generator) is absolutely necessary. No aligning adjustments should be attempted with the chassis in the cabinet. Remove the knobs and the two bolts which are used to fasten the chassis.

All adjustments should be made with a non-metallic screw driver.

RESONANCE INDICATOR:

Use as a resonance indicator an output meter connected across the primary of the speaker input transformer, or by means of an adapter between the plate and screen terminals of the type 41 output tube. Use only enough signal to get a readily readable output. A low range output meter or the low scale of a multi-range voltmeter should be used.

ALIGNING I. F. TRANSFORMERS: (465 K. C.)

Connect external oscillator which has been adjusted to 465 kilocycles in series with .1 mfd. condenser, to the control grid cap of the type 6A7 tube. Ground the chassis to the oscillator. Adjust output I.F. transformer (No. 108-83) and input I.F. transformer (No. 108-82) to resonance. See label on bottom of cabinet for location of these transformers.

R. F. ALIGNMENT: (535-1720 K. C.)

1. With gang condenser in its minimum capacity position, plates entirely out of mesh, connect an external oscillator in series with a 200 mmf. condenser to tan antenna and black ground leads and make the following adjustments:
   (a) With external oscillator set at 1720 kilocycles, adjust oscillator trimmer (rear of gang condenser).
   (b) Re-set external oscillator to 1400 kilocycles, rotate condenser, pick up oscillator signal and adjust antenna trimmer to resonance (front section of gang condenser).
   (c) Check sensitivity at 600 and 1000 kilocycles.

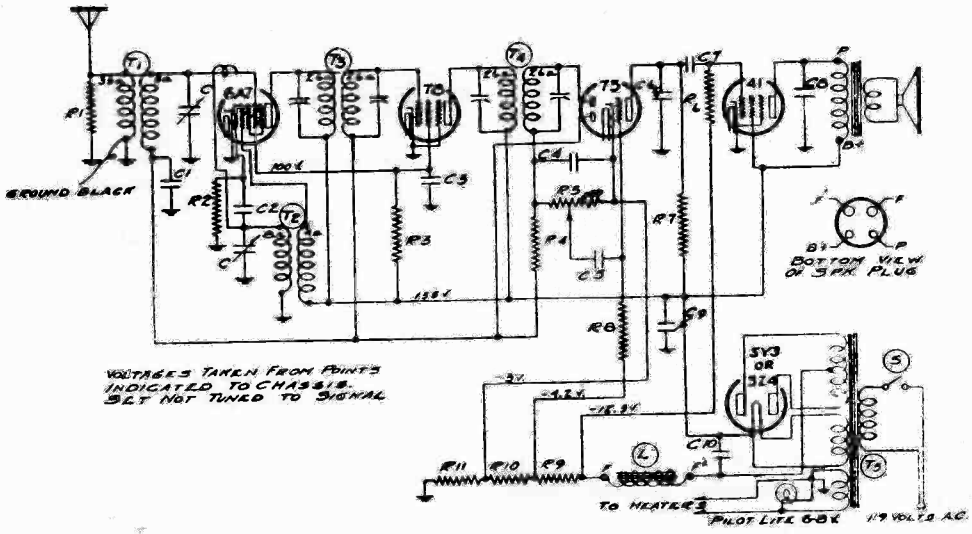

CONDENSERS

Part No.	Schematic Reference	Description	No. Used In Set
BE 100-11	C-5:C-7	.01 x 400 Volt Tubular	2
BE 100-19	C-8	.006 x 600 Volt Tubular	1
BE 100-1	C-3	.1 x 400 Volt Tubular	1
BE 100-22	C-1	.05 x 200 Volt Tubular	1
BE 119-24	C-9:C-10	Dual 5 mfd. x 200 Volt Electrolytic	1
BE 129-5	C-6	.0001 Mica—Type MT—20%	1
BE 129-12	C-2:C-4	.00025 Mica—Type MT—20%	2

RESISTORS

BE 106-29	R-9:R-10 R-11	(R9, 200 ohm): (R10, 33 ohm): (R11, 100 ohm) Metal clad resistor	1
BE 130-17	R-1	10M Ohm-1/3 Watt-20%-20 V.Carbon	1
BE 130-109	R-3	7500 Ohm-½ Watt-20%-10 V. Carbon	1
BE 130-117	R-2	50M Ohm-1/10 Watt-20%-50 V.Carbon	1
BE 130-118	R-6	600M Ohm-1/3 Watt-20%-100 V.Carbon	1
BE 130-121	R-4:R-8	3.2 Meg Ohm-1/3 Watt-30%-100 V.Carbon	2
BE 130-122	R-7	210M Ohm-1/10 Watt-30%-20%-50 V. Carbon	1

COILS

BE 108-82	T3	Input I.F. Coil Assem. Comp. with Can.	1
BE-108-83	T4	Output I.F. Coil Assem. Comp. with Can.	1
BE 110-46	T2	Oscillator Coil Assembly Complete	1
BE 111-58	T1	Antenna Coil Assembly Complete	1

SOCKETS

BE 121-6	Six Prong Socket—Marked "41"	1
BE 121-6	Six Prong Socket—Marked "75"	1
BE 121-6	Six Prong Socket—Marked "78"	1
BE 121-7	Seven Prong Socket—Marked "6A7"	1
BE-121-9	Four Prong Socket—Marked "SPKR"	1
BE 121-16	Five Prong Socket—Marked "5Z4"(Octal)	1

MISCELLANEOUS

Part No.	Schematic Reference	Description	No. Used In Set
BE 101-54	R-5	Volume Control and Switch (1 meg ohm)	1
BE 102-33	C	Two Gang Variable Condenser	1
BE 107-39		Line Cord & Plug	1
BE 128-8		Ivory Bakelite Knob (Model 62-265)	2
BE 131-2		Brown Bakelite Knob	1
BE 131-8		Spring for above knob	2

DIAL PARTS LIST

BE 107-28	Pilot Light Socket	1
BE 112-15	Dial Crystal only—less escutcheon	1
BE 112-160	Dial Pointer Complete with screw	1
BE 112-164	Brown Bakelite Escutcheon complete with crystal	1
BE 112-226	Ivory Bakelite Escutcheon complete with glass (Model 62-265)	1
BE 112-167A	Dial Scale	1
BE 116-13	6-8 Volt, T-51 Pilot Light Bulb	1
BE 117-59	Pointer Bushing Stud	1
BE 117-60	Pointer Bushing Assembly	1
BE 117-61	Drive Pulley	1
BE 117-68	Dial Bracket	1
BE 120-7A	Take-up Spring	1
BE 131-52	Drive Belt	1
BE 134-9	Horse Shoe Washer	1

MANUAL OF MOST-OFTEN-NEEDED RADIO DIAGRAMS

ARVIN RADIO CHASSIS RE29 AND RE35 MODEL NUMBERS-58, 58A AND 88

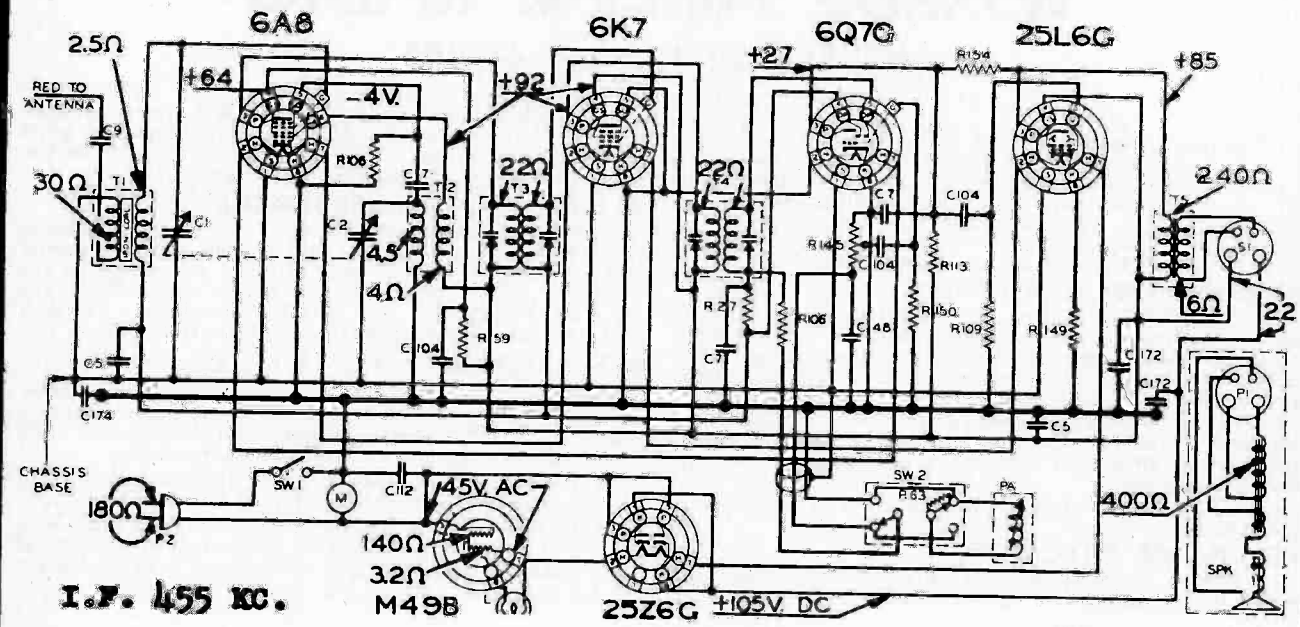

RESISTORS

Ref. No.	Part No.	Description
R59	17-4191	15,000 ohms ½ watt
R27	17-4788	2,000,000 ohms ½ watt
R106	17-14171	50,000 ohms ½ watt
R109	17-14174	500,000 ohms ½ watt
R-113	17-14178	250,000 ohms ½ watt
R149	17-14241	150 ohms ½ watt
R150	17-14242	5,000,000 ohms ½ watt
R154	17-14244	1,500,000 ohms ½ watt

CONDENSERS

Ref. No.	Part No.	Description
C7	17-2064	.0001 mfd. 600 volt
C104	17-4206	.01 mfd. 200 volt
C48	17-4207	.00025 mfd. 600 volt
C9	17-4292	.001 mfd. 600 volt
C5	17-14015	.05 mfd. 200 volt
C112	17-14139	.05 mfd. 400 volt
C172 A & B	17-14239	20-20 mfd. 150 volt
C174	17-14248	.2 mfd 400 volt
C1-C2	17-15900	Tuning Condenser

COILS and TRANSFORMERS

Ref. No.	Part No.	Description
T4	00-15979	Oscillator Coil
T-5	00-15980	Output Transformer
T3	00-16060	1st I.F. Transformer
T4	00-16061	2nd I.F. Transformer
T1	00-16083	Antenna Coil

SPEAKERS, DIAL PARTS, CABINETS & MISCELLANEOUS

Part No.	Description
10-5181	Chassis Mounting Screw per doz.
28-5188	Dial drive pulley (rubber)
83-2357	Grille cloth (ivory rayon)
29-13470	Tuning shaft retaining washer
29-13583	Dial drive cord (16" long)
34-13360	Dial drive takeup spring
17-14997	Needle cup
17-14998	Needle cup cover
19-15476	Tuning condenser drive pulley
17-15791E	Line cord and plug
29-15905	Cabinet (58A- Ivory)
32-15907	Chassis bottom cover
29-15909	Cabinet (58-Black)
32-15915	Tuning shaft bracket
29-15916	Cabinet back cover
17-15926A	Volume control switch
29-15929	Knob (wood-walnut finish)
29-15937	Knob (walnut bakelite)
29-15958	Tuning Shaft
17-15973	Dial light socket and clip
81-15974	Dial glass (black background)
17-15983	Speaker (5" diameter)
17-15989	Speaker (6" diameter)
81-16015	Dial glass (brown background)
27-16020	Cabinet (Model 88)
17-16021	Phono pickup and arm
17-16022	Phono turntable and motor
29-16024	Knob (ivory bakelite)
17-16065	Radio-Phono switch
29-16068	Knob (Radio-Phono switch)

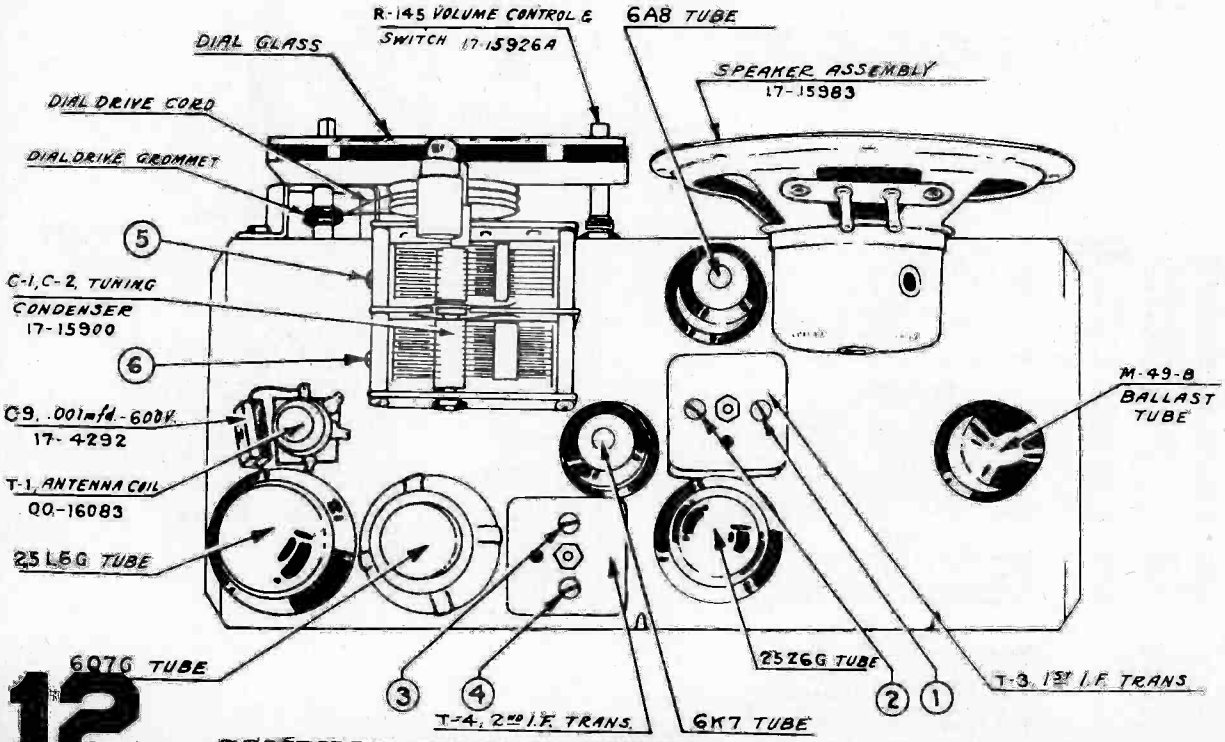

COMPILED BY M. N. BEITMAN, SUPREME PUBLICATIONS

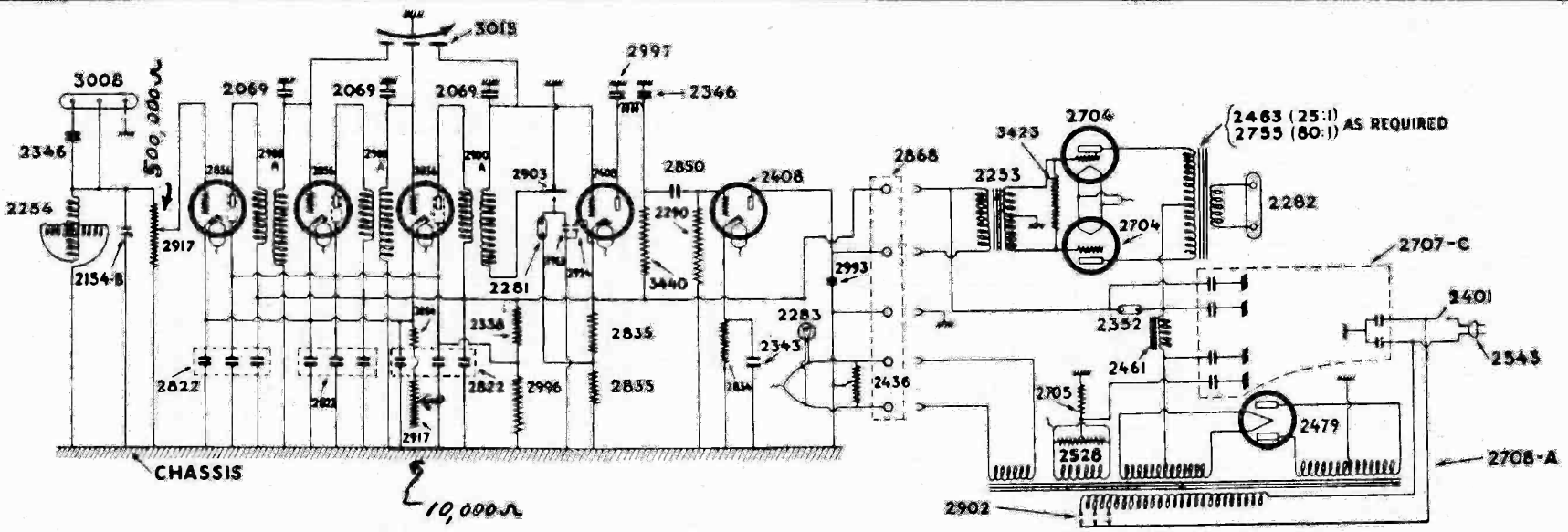

FIXED CONDENSERS

The fixed condensers used in Series 50 Receivers are listed below:

Part Number	Capacity, mfd.	Function
2346	.0001	Antenna series and detector plate by-pass.
2822	three 0.5 in one can	Screen grid, plate and cathode by-pass.
2924	1.0	Detector bias resistor by-pass.
2850	.01	AF coupling condenser.
2343	2.0	AF bias resistor by-pass.
2963	.002	Phonograph pick-up by-pass.
2993	.004	Audio by-pass.
2997	.0005	RF filter condenser.

National Carbon Co.
Models 50, 52, 53, 54

FIXED RESISTORS

Part Number	Resistance
2290	2 megohm
2835	4000 ohms
3440	125000 ohms
3004	200 ohms
2834	3000 ohms
2338	2500 ohms
2996	2250 ohms

VOLUME CONTROL: 500,000 Ω AND 10,000Ω

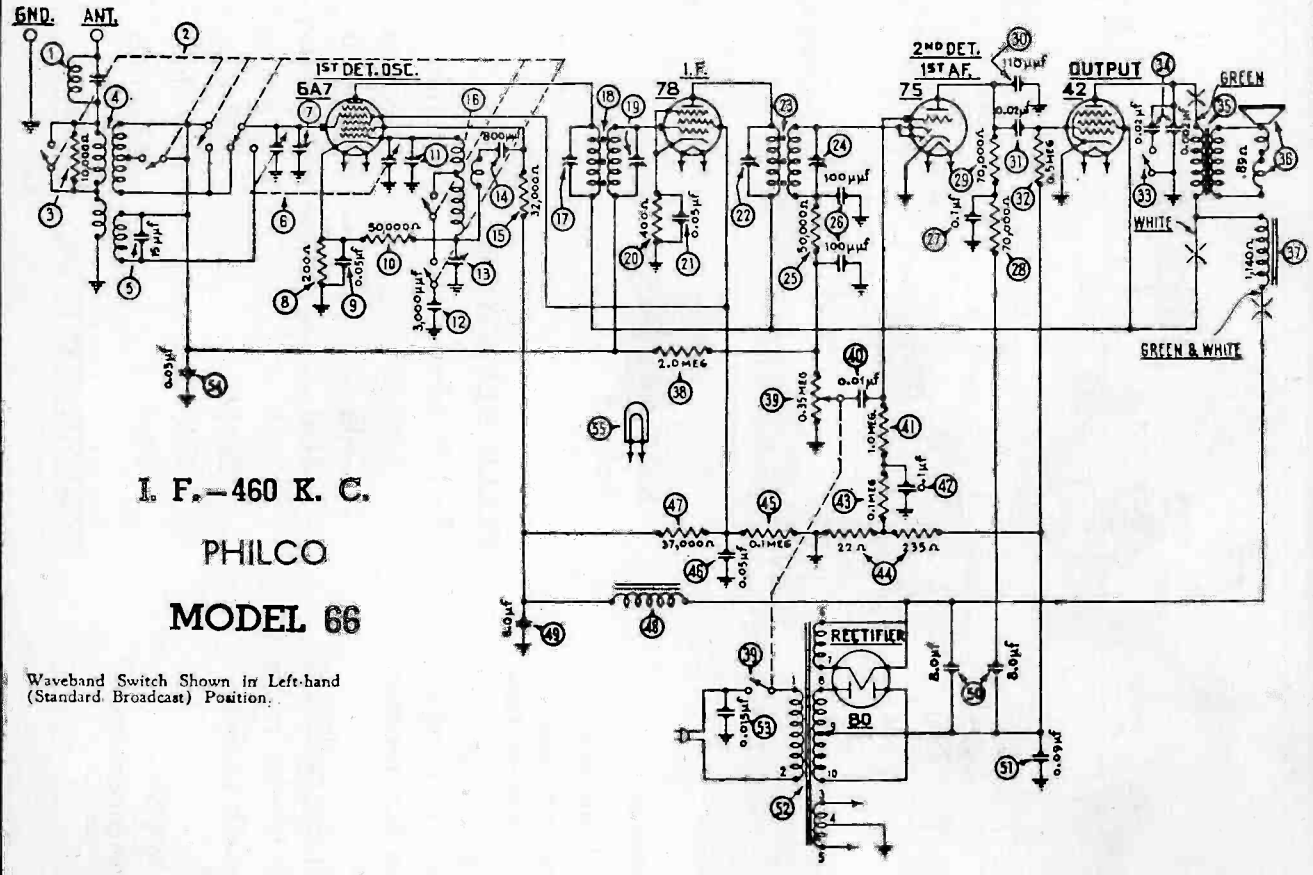

I. F.—460 K. C.

PHILCO

MODEL 66

Waveband Switch Shown in Left-hand (Standard Broadcast) Position.

No. on Figs.	Description	Part No.
1	Wave Trap	38-5199
2	Wave-band Switch	42-1066
3	Resistor (10,000 ohms) (Brown-Black-Orange)	33-1000
4	Antenna Transformer	32-1412
5	Condenser (.000015 Mfd.)	30-1030
6	Tuning Condenser Assembly	31-1231
7	Compensating Condenser (ANT)	Part of 6
8	Resistor (200 ohms Flexible) (Red-Black-Brown)	7217
9	Condenser (.05 Mfd. Tubular)	30-4020
10	Resistor (50,000 ohms) (Green-Green-Orange)	6098
11	Compensating Condenser (OSC. HF)	Part of 6
12	Condenser (.003 Mfd. Mica)	30-1022
13	Compensating Condenser (Osc. I. F.)	04000-S
14	Condenser (.0008 Mfd. Mica)	5878
15	Resistor (32,000 ohms) (Orange-Red-Orange)	5279
16	Oscillator Transformer	32-1413
17	Compensating Condenser (1st I. F. Pri.)	04000M
18	1st I. F. Transformer	32-1414
19	Compensating Condenser (1st I. F. Secondary)	04000M
20	Resistor (400 ohms Flexible)	33-3016
21	Condenser (.05 Mfd. Tubular)	30-4020
22	Compensating Condenser (2d I. F. Primary)	04000M
23	2d I. F Transformer	32-1415
24	Compensating Condenser (2d I. F. Secondary)	04000J
25	Resistor (50,000 ohms) (Green-Brown-Orange)	6098
26	Condenser (.0001 Mfd. Twin Bakelite Block)	8035-B
27	Condenser (.1 Mfd. Tubular)	30-4170
28	Resistor (70,000 ohms) (Violet-Black-Orange)	33-1115
29	Resistor (70 000 ohms) (Violet-Black-Orange)	33-1115
30	Condenser (.00011 Mfd. Mica)	30-1006
31	Condenser (.02 Mfd. Tubular)	30-4113
32	Resistor (500,000 ohms) (Yellow-White-Yellow)	6097
33	Tone Control	30-4192
34	Condensers in Tone Control	Inside 33

No. on Figs.	Description	Part No.
35	Output Transformer	32-7019
36	Voice Coil & Cone Assembly (S-12)	36-3014
37	Field Coil and Pot. Assembly (S-12)	36-3341
38	Resistor (2 Megohms) (Red-Black-Green)	33-1025
39	Volume Control and On-Off Switch	33-5006
40	Condenser (.01 Mfd.) (Bakelite Block)	3903-AB
41	Resistor (1 Megohm) (Brown-Black-Green)	33-1096
42	Condenser (.1 Mfd.)	30-4122
43	Resistor (.1 Meg.) (White-White-Orange)	6099
44	Resistor (B. C. Wire-wound) (22, 235 ohms)	33-3037
45	Resistor (.1 Meg.) (White-White-Orange)	6099
46	Condenser (.05 Mfd. Tubular)	30-4123
47	Resistor (37,000 ohms) (Orange-Violet-Orange)	33-1098
48	Filter Choke	32-7018
49	Condenser (Electrolytic—6 Mfd.)	30-2021
50	Condenser (Electrolytic—8-8 Mfd.)	30-2028
51	Condenser (.09 Mfd. Bakelite Block)	4989-D
52	Power Transformer	8046
53	Condenser (.015 Mfd. Bakelite Block)	3793-W
54	Condenser (.05 Mfd. Tubular)	30-4020
55	Dial Light	6608
	Four Prong Socket	7544
	Six Prong Socket	7547
	Seven Prong Socket	27-6005
	Tube Shield	28-1107
	Chassis Mounting Screw	W-567
	Chassis Mounting Washer (Metal)	W-315
	Chassis Mounting Washer (Rubber)	5189
	Knob (Large)	27-4051
	Knob (Small)	27-4052
	Dial Assembly	31-1234
	Dial Scale	27-5057
	A. C. Cord and Plug Assembly	L-943A

PHILCO AUTO RADIO MODEL 5

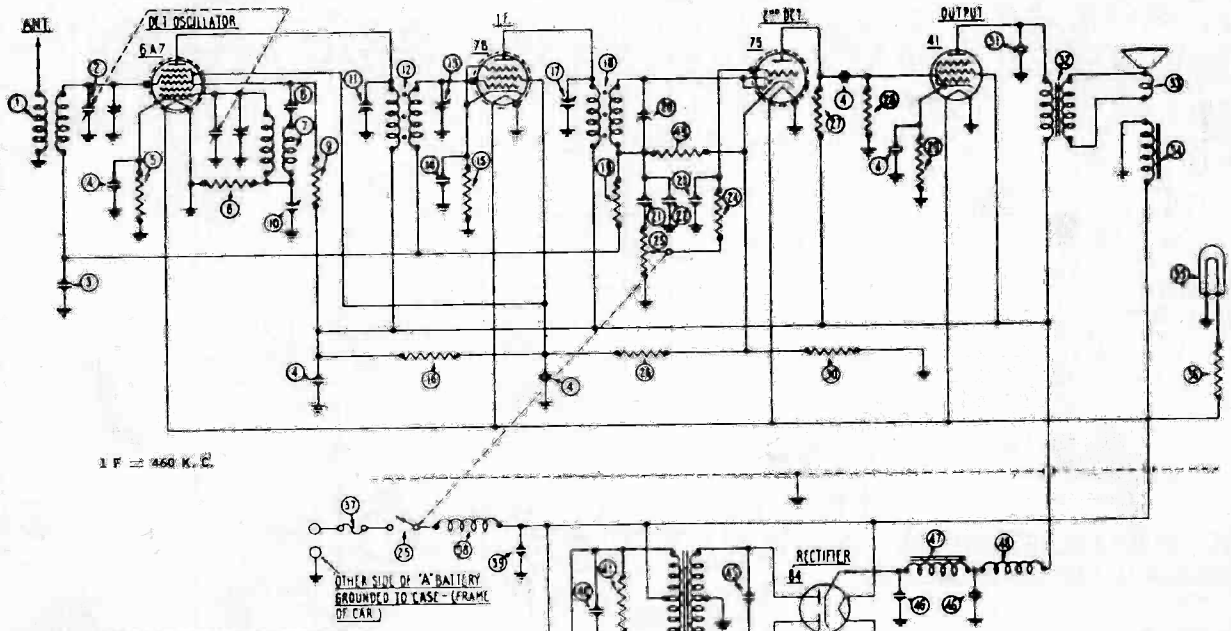

FIGURE 3

FILTER CONDENSER 30-4017

(4) on Figures 3 and 4

There are five sections in this filter condenser, all terminated with wire leads. The two green leads connect to the .1 mfd. section, which is used for coupling the plate output of the 75 tube to the grid of the 41 tube.

The remaining four sections are all grounded to the can on one side. The white leads connect to two .25 mfd. sections. The first section is connected to the cathode of the 6A7 tube. The second section is connected to the screen of the 78 tube.

The red lead from the .5 mfd. section is connected to the B + side of all the plate circuits. A 20 mfd. section terminates in a black lead, which in turn is connected to the cathode of the 41 tube.

FILTER CONDENSER 30-2008

(18) on Figures 3 and 4

The condenser consists of two sections, a 4 mfd. section and an 8 mfd. section, both of them grounded on one side.

The 4 mfd. section terminates in a red lead, which is connected to the cathode of the 84 tube. The 8 mfd. section terminates in a green lead, which is connected between the two chokes in the rectifier filter circuit.

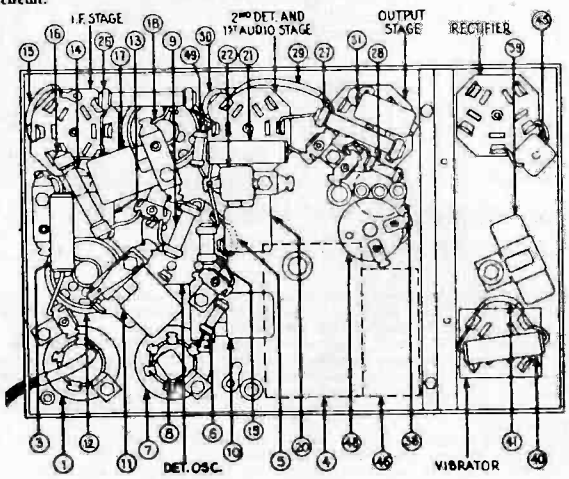

PARTS LIST

No.	Description	Part No.
(1)	Antenna Transformer	32-1084
(2)	Tuning Condenser	31-1019
(3)	Condenser (.05 mfd.)	30-4020
(4)	Filter Condenser (.25, .25, .5, 20 mfd.)	30-4017
(5)	Resistor (200 ohms)	7217
(6)	Resistor (13,000 ohms)	8207
(7)	Oscillator Transformer	32-1085
(8)	Condenser (250 mmfd.)	3082
(9)	Resistor (15,000 ohms)	6208
(10)	Padder	04000S
(11)	Padder	04000J
(12)	First I. F. Transformer	32-1086
(13)	Padder	04000Y
(14)	Condenser (.5 mfd.)	30-4018
(15)	Resistor (1000 ohms)	33-3017
(16)	Resistor (10,000 ohms)	4412
(17)	Padder	04000D
(18)	Second I. F. Transformer	32-1087
(19)	Resistor (1,000,000 ohms)	4409
(20)	Padder	04000M
(21)	Condenser (.05 mfd.)	30-4020
(22)	Condenser (250 mmfd.)	3082
(23)	Condenser (500 mmfd.)	3910
(24)	Resistor (100,000 ohms)	6000
(25)	Volume Control & Switch	33-5009
(26)	Resistor (32,000 ohms)	3525
(27)	Resistor (250,000 ohms)	3768
(28)	Resistor (500,000 ohms)	6007
(29)	Resistor (700 ohms)	6443
(30)	Resistor (400 ohms)	33-3018
(31)	Condenser (0,000 mmfd.)	30-1002
(32)	Output Transformer	32-7005
(33)	Cone & Voice Coil	02861
(34)	Field Coil Assembly	36-3016
(35)	Pilot Lamp	6608
(36)	Resistor (7 ohms)	5110
(37)	Fuse (15 amp.)	7227
(38)	R. F. Choke	32-1083
(39)	Condenser (.5 mfd.)	30-4015
(40)	Condenser (.05 mfd.)	30-4020
(41)	Resistor (200 ohms)	7217
(42)	Vibrator	41-3186
(43)	Resistor (200 ohms)	7217
(44)	Transformer	32-7030
(45)	Condenser (6000 mmfd.)	30-1002
(46)	Condenser (4 mfd., 8 mfd.)	30-2008
(47)	Filter Choke	32-7026
(48)	R. F. Choke (high voltage)	32-1078
(49)	Resistor (250,000 ohms)	4410
	Control Assembly (direct drive)	42-5008
	Tuning Shaft	28-8006
	Volume Shaft	28-8007
	Dial	27-5006
	Knob	03334
	Fuse	7227
	Fuse Insulator	27-7131
	Antenna Lead	38-5131
	"A" Lead	38-5298
	Bracket (control mtg.)	6035
	Studs (set mtg.)	28-6036
	Nuts (set mtg.)	W55A
	Strap (control mtg.)	04344

MANUAL OF MOST-OFTEN-NEEDED RADIO DIAGRAMS

PHILCO AUTO RADIO MODEL T11

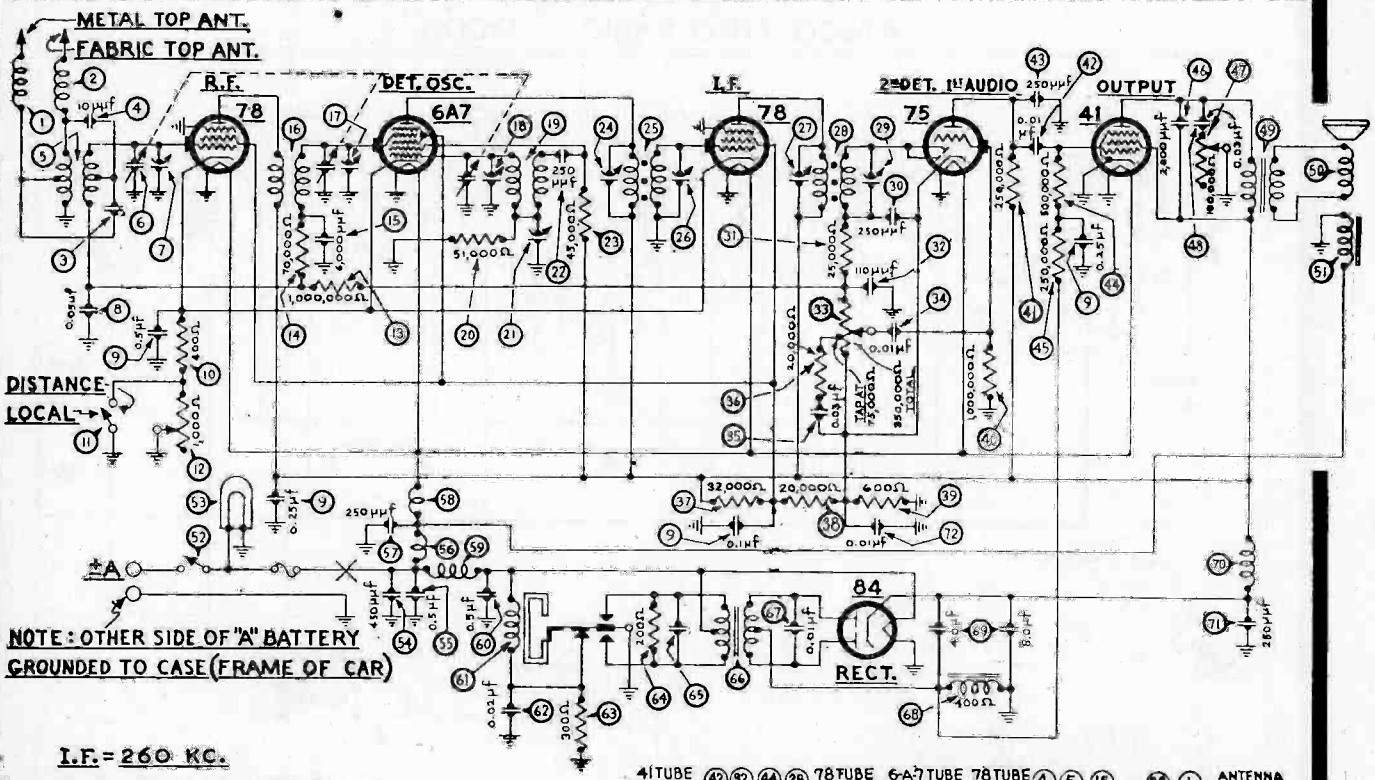

I.F. = 260 KC.

PARTS LIST

No.	Description	Part No.
1	Antenna Choke	38-7210
2	Antenna Choke	38-7210
3	Condenser (70 mmfd.)	30-1068
4	Condenser (10 mmfd.)	30-1065
5	Antenna Transformer	32-1925
6	Tuning Condenser	31-1674
7	First Padder (on Tun. Cond.)	
8	Condenser (.05 mfd.)	30-4444
9	Condenser (.1-.25-.25-.5 mfd.)	30-4374
10	Resistor (400 ohms)	33-1211
11	Sensitivity Control Switch	42-1140
12	Sensitivity Control	33-5129
13	Resistor (1,000,000 ohms)	33-510344
14	Resistor (70,000 ohms)	33-370334
15	Condenser (6,000 mmfd.)	30-4445
16	R. F. Transformer	32-1926
17	Second Padder (on Tun. Cond.)	
18	Third Padder (on Tun. Cond.)	
19	Oscillator Transformer	32-1927
20	Resistor (51,000 ohms)	33-351344
21	Low Frequency Padder	31-6056
22	Condenser (250 mmfd.)	30-1032
23	Resistor (45,000 ohms)	33-345344
24	Padder (Pri. 1st I. F. Trans.)	
25	First I. F. Transformer	32-1260
26	Padder (Sec. 1st I. F. Trans.)	
27	Padder (Pri. 2nd I. F. Trans.)	
28	Second I. F. Transformer	32-2164
29	Padder (Sec 2nd I. F. Trans.)	
30	Condenser (250 mmfd.)	30-1032
31	Resistor (25,000 ohms)	33-325344
32	Condenser (110 mmfd.)	30-1031
33	Volume Control (350,000 ohms)	33-5121
34	Condenser (.01 mfd.)	30-4124
35	Condenser (.03 mfd.)	30-4449
36	Resistor (20,000 ohms)	33-320334
37	Resistor (32,000 ohms)	33-332434
38	Resistor (20,000 ohms)	33-320334
39	Resistor (600 ohms)	33-1212
40	Resistor (1,000,000 ohms)	33-510344
41	Resistor (250,000 ohms)	33-424344
42	Condenser (.01 mfd.)	30-4145
43	Condenser (250 mmfd.)	30-1032
44	Resistor (500,000 ohms)	33-449344
45	Resistor (250,000 ohms)	33-424344
46	Condenser (2,000 mmfd.)	30-4177
47	Tone Control	
48	Condenser (.03 mfd.)	
49	Output Transformer	
50	Cone & Voice Coil	
51	Field Coil Assembly	
52	On & Off Switch	
53	Pilot Lamp	
54	Condenser (450 mmfd.)	
55	Condenser (.5 mfd.)	
56	"A" Choke	
57	Condenser (250 mmfd.)	
58	Filament Choke	
59	Vibrator Choke	
60	Condenser (.5 mfd.)	
61	Vibrator	
62	Condenser (.02 mfd.)	
63	Resistor (300 ohms)	
64	Resistor (200 ohms)	
65	Condenser (.05 mfd.)	
66	Power Transformer	
67	Condenser (.01 mfd.)	
68	Filter Choke	
69	Filter Condenser (4-8 mfd.)	
70	R. F. Choke	
71	Condenser (250 mmfd.)	
72	Condenser (.01 mfd.)	

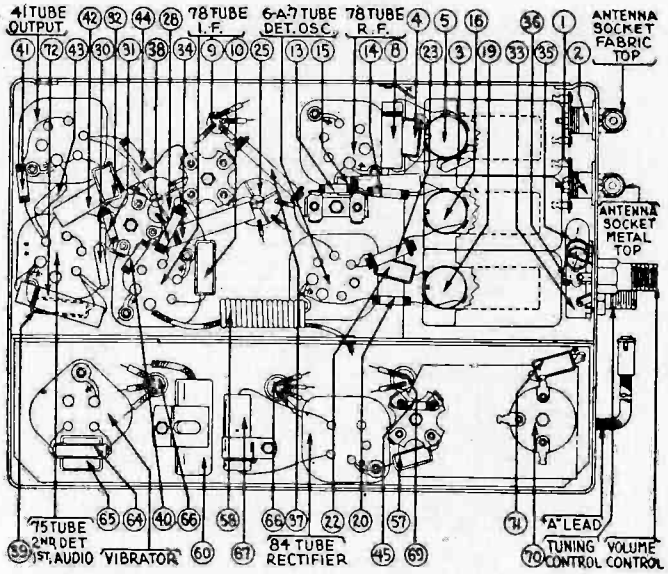

CHANGES — "Run Numbers" are stamped on the chassis sub-base for identification. These "Run Numbers" are changed consecutively as major changes are made in the Receiver wiring and parts.

RUN No. 3 — A 250 mmfd. condenser has been added to the Receiver. One side is connected between resistors (27) and (28) and the other side to ground.

RUN No. 4 — The 250 mmfd. condenser added in Run No. 3 has been removed.

RUN No. 5 — The Antenna Transformer (5) is replaced with a new type having the same part number. It can be identified by the red and blue paint marks on the fibre.

RUN No. 6 — Condenser (71) has been removed from the cathode side of the "B" choke (70) and connected to the plate side of choke (70).

RUN No. 6A — A 250 mmfd. condenser has been added to the Receiver. One side is connected between resistors (41) and (45) and the other side to ground.

RUN No. 8 — Condenser (18) removed (1250 mmfd.). Part No. 30-4020 added. (.05 mfd.)

RUN No. 13 — The 250 mmfd. condenser that was added in Run No. 6A has been removed.

RUN No. 14 — Resistor (10) removed (400 ohms). Part No. 33-1225 added. (350 ohms.)

No major changes were involved in Run Nos. 2, 7, 9, 10, 11, 12.

COMPILED BY M. N. BEITMAN, SUPREME PUBLICATIONS

MODEL 16

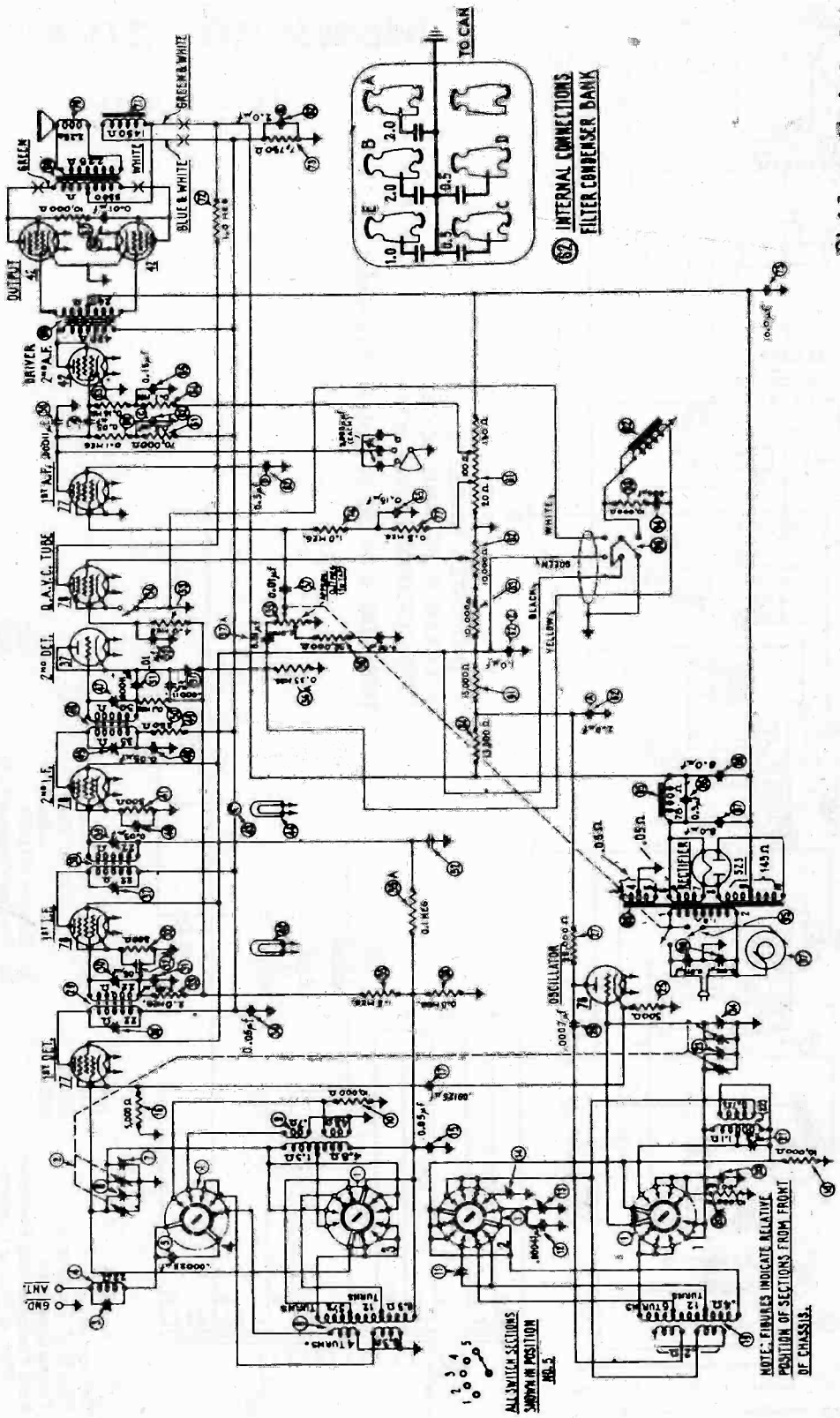
Philco Model 16
I.F. 460 KC.
INTERNAL CONNECTIONS
FILTER CONDENSER BANK
TO CAN
GREEN & WHITE
BLUE & WHITE
GREEN
WHITE
OUTPUT
DRIVER
2nd A.F.
1st A.F.
A.V.C. TUBE
2nd DET.
2nd I.F.
1st I.F.
1st DET.
OSCILLATOR
RECTIFIER
ANT.
GND.
ALL SWITCH SECTIONS SHOWN IN POSITION NO. 5
NOTE: FIGURES INDICATE RELATIVE POSITION OF SECTIONS FROM FRONT OF CHASSIS.

Models 20, 20-A and 21

Philco Radio

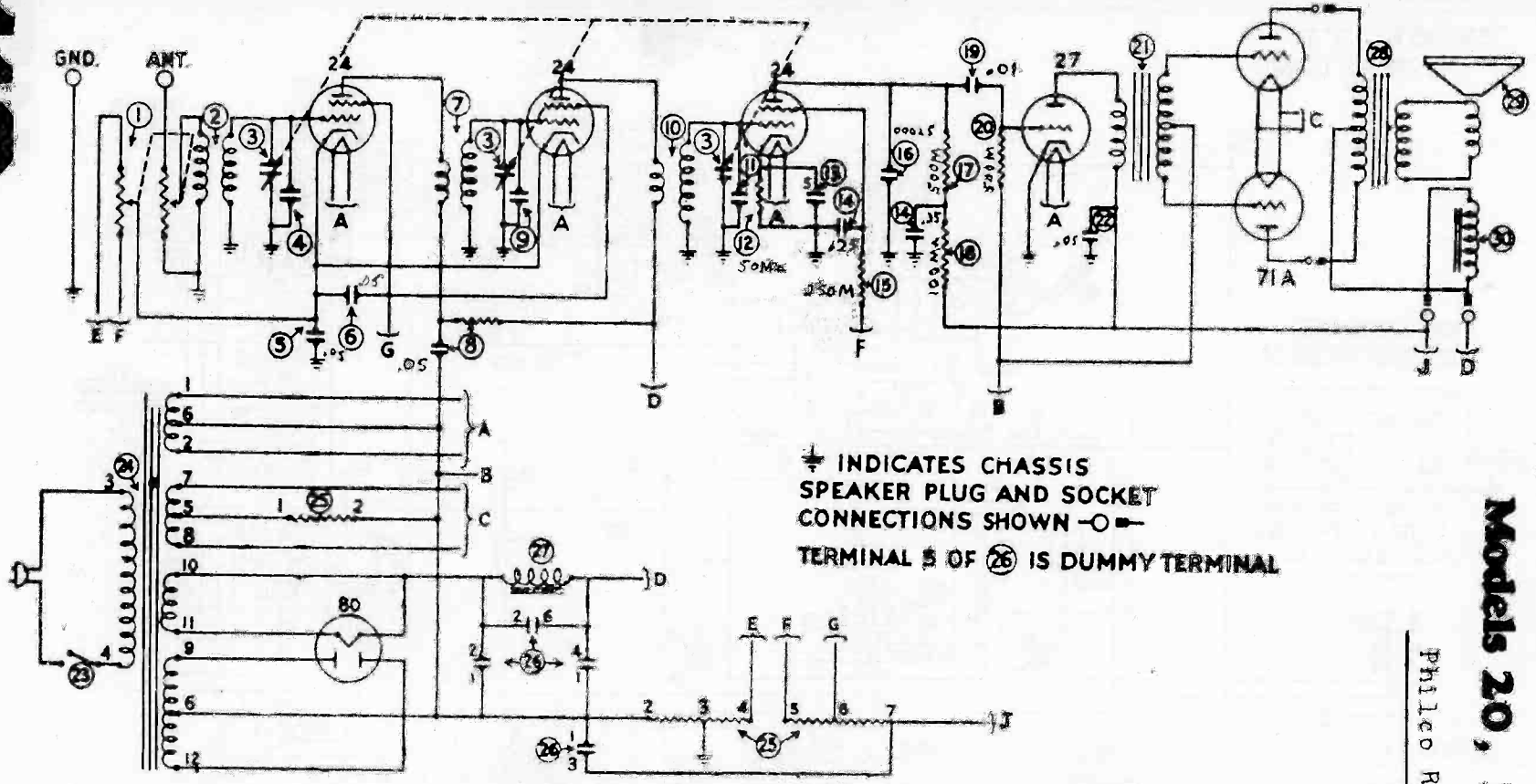

No.	Description	Part No.
1	Volume Control	4094
2	First R. F. Transformer	3884-N
3	Tuning Condenser	4200-A
4	First Compensating Condenser (Part of Tuning Condenser Assembly)	
5	By-Pass Condenser (.05)	3615-J
6	By-Pass Condenser (.05)	3615-M
7	Second R. F. Transformer	3884-P
8	By-Pass Condenser (.05) and Resistor	3615-K
9	Second Compensating Condenser (Part of Tuning Condenser Assembly)	
10	Third R. F. Transformer	3884-P
11	Third Compensating Condenser (Part of Tuning Condenser Assembly)	
12	Resistor (50,000)	4237
13	By-Pass Condenser (.5)	3583
14	By-Pass Condenser (double .25)	3557
15	Resistor (250,000)	3768
16	By-Pass Condenser (.00025)	3082
17	Resistor (500,000)	3769
18	Resistor (100,000)	3767
19	Condenser (.01)	3903-F
20	Resistor (500,000)	3769
21	Push-pull Input Transformer	4232
22	By-Pass Condenser (.05)	3615-L
23	On-off Switch	4095
24	Power Transformer (50-60 cycle)	4234
	Power Transformer (25-60 cycle)	4268
25	B. C. Resistor	4230
26	Filter Condenser (50-60 cycle)	4235
	Filter Condenser (25-60 cycle)	4269
27	Filter Choke	4231
28	Push-Pull Output Transformer	2766
29	Voice Coil and Cone	2769-B
30	Field Coil	2768

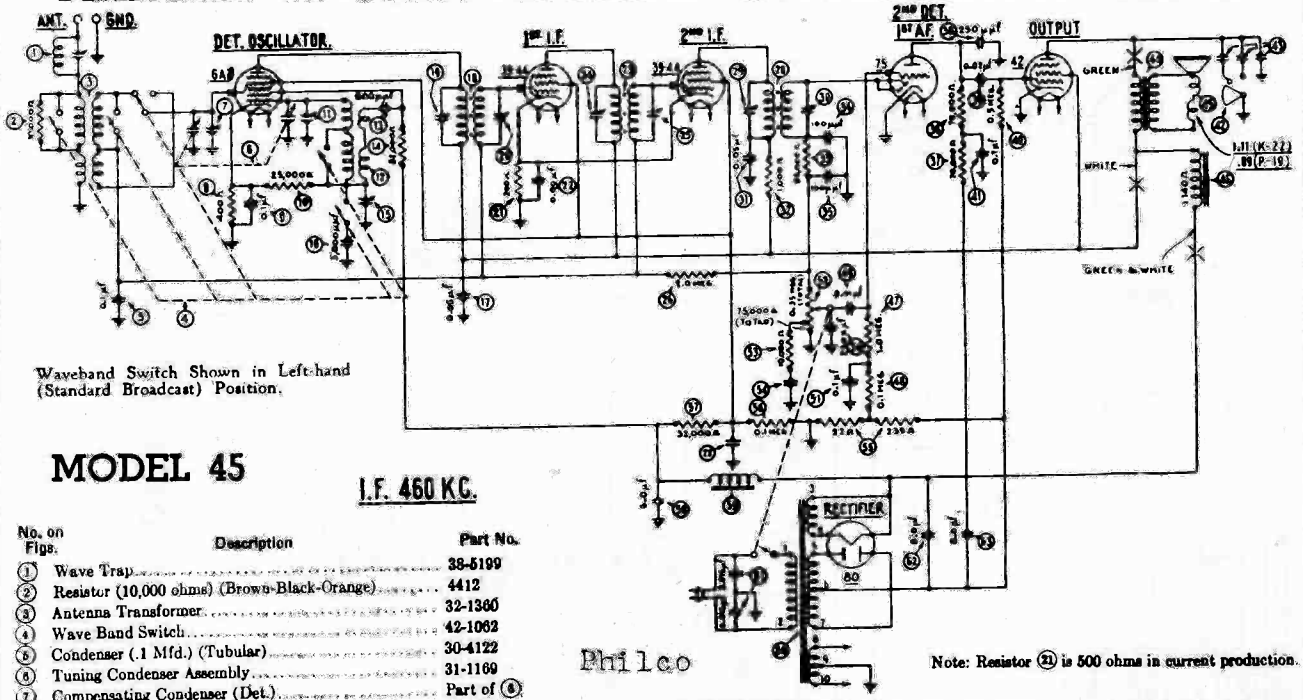

Waveband Switch Shown in Left-hand (Standard Broadcast) Position.

MODEL 45

I.F. 460 KC.

Note: Resistor (21) is 500 ohms in current production.

No. on Figs.	Description	Part No.
(1)	Wave Trap	38-5199
(2)	Resistor (10,000 ohms) (Brown-Black-Orange)	4412
(3)	Antenna Transformer	32-1360
(4)	Wave Band Switch	42-1062
(5)	Condenser (.1 Mfd.) (Tubular)	30-4122
(6)	Tuning Condenser Assembly	31-1169
(7)	Compensating Condenser (Det.)	Part of (6)
(8)	Resistor (400 ohms—Flexible wire wound)	33-3016
(9)	Condenser (.1 Mfd.) (Tubular)	30-4122
(10)	Resistor (25,000 ohms) (Red-Green-Orange)	4516
(11)	Compensating Condenser (Osc. H. F.)	Part of (6)
(12)	Oscillator Transformer	32-1361
(13)	Condenser (.0008 Mfd.—Mica)	5878
(14)	Resistor (32,000 ohms) (Orange-Red-Orange)	3525
(15)	Compensating Condenser (Osc. L. F.)	04000-S
(16)	Condenser (.003 Mfd.—Mica)	7301
(17)	Condenser (.05 Mfd.—Tubular)	30-4123
(18)	1st I. F. Transformer	32-1362
(19)	Compensating Condenser (1st I. F. Primary)	Part of (18)
(20)	Compensating Condenser (1st I. F. Secondary)	Part of (18)
(21)	Resistor (500 ohms—Flexible wire wound)	6977
(22)	Condenser (.09 Mfd. twin) (Bakelite block)	4989-Z
(23)	2d I. F. Transformer	32-1363
(24)	Compensating Condenser (2d I. F. Primary)	Part of (23)
(25)	Compensating Condenser (2d I. F. Secondary)	Part of (23)
(26)	Resistor (2 megs.) (Red-Black-Green)	5872
(27)	Pilot Lamp	6608
(28)	3d I. F. Transformer	32-1364
(29)	Compensating Condenser—3d I. F. Primary	Part of (28)
(30)	Compensating Condenser—3d I. F. Secondary	Part of (28)
(31)	Condenser (.05 Mfd. Tubular)	30-4123
(32)	Resistor (1,000 ohms) (Brown-Black-Red)	5837
(33)	Resistor (50,000 ohms) (Green-Brown-Orange)	4518
(34)	Condenser (.0001 Mfd. Mica)	30-1031
(35)	Condenser (.0001 Mfd. Mica)	30-1031
(36)	Resistor (70,000 ohms) (Violet-Black-Orange)	5385
(37)	Resistor (70,000 ohms) (Violet-Black-Orange)	5385
(38)	Condenser (.00025 Mfd. Mica)	5858
(39)	Condenser (.02 Mfd. Tubular)	30-4113
(40)	Resistor (.5 meg.) (Yellow-White-Yellow)	4517
(41)	Condenser (.1 Mfd.) (Tubular)	30-4170
(42)	Tone Control	30-4178
(43)	Condensers	Inside 42
(44)	Output Transformer (Code 121)	32-7041
	Output Transformer (Code 122)	2580
(45)	Voice Coil & Cone Assembly	
	P-19 (Compact)	36-3027
	K-22 (Lowboy)	36-3174
(46)	Field Coil and Pot Assembly	
	P-19 (Compact)	36-3298
	K-22 (Lowboy)	02767

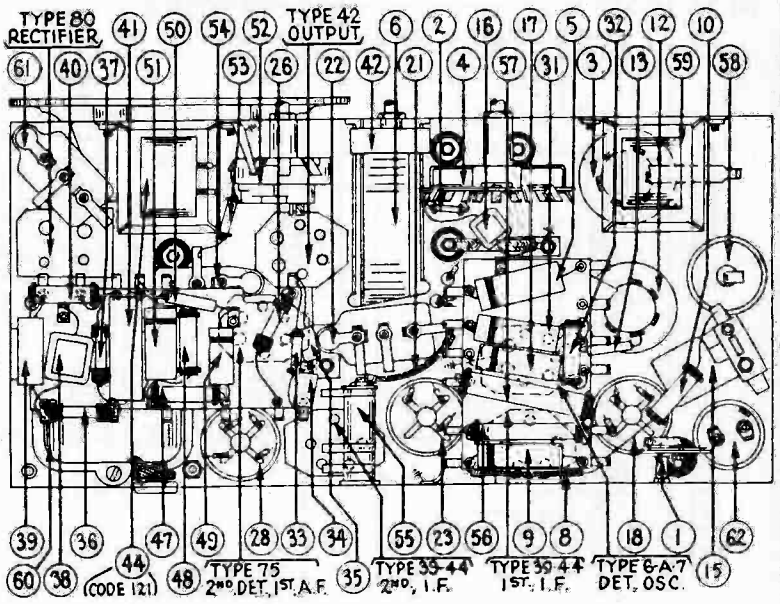

(47)	Resistor (1 meg.) (Brown-Black-Green)	4409
(48)	Resistor (.1 meg) (White-White-Orange)	4411
(49)	Condenser (.01 Mfd. Tubular)	30-4124
(50)	Condenser (.00025 Mfd. Mica)	5858
(51)	Condenser (.1 Mfd. Tubular)	30-4122
(52)	Volume Control and On-Off Switch	33-5066
(53)	Resistor 10,000 ohms (Brown-Black-Orange)	33-1000
(54)	Condenser (Code 121) (.05 Mfd.) (Bakelite Block)	3615-W
	Condenser (Code 122) (.09 Mfd.) (Bakelite Block)	4989-AM
(55)	Voltage Divider (BC Resistor 22—235 ohms) (Wire wound)	33-3037
(56)	Resistor .1 meg (White-White-Orange)	3767
(57)	Resistor 32,000 ohms (Orange-Red-Orange)	33-1026
(58)	Condenser (Electrolytic—6 Mfd.)	30-2020
(59)	Filter Choke	32-7018
(60)	Power Transformer	32-7226
(61)	Condenser (.015 Mfd. twin—Bakelite block)	3793-E
(62), (63)	Condenser (Electrolytic 8—8 Mfd. 450 Volts)	30-3028

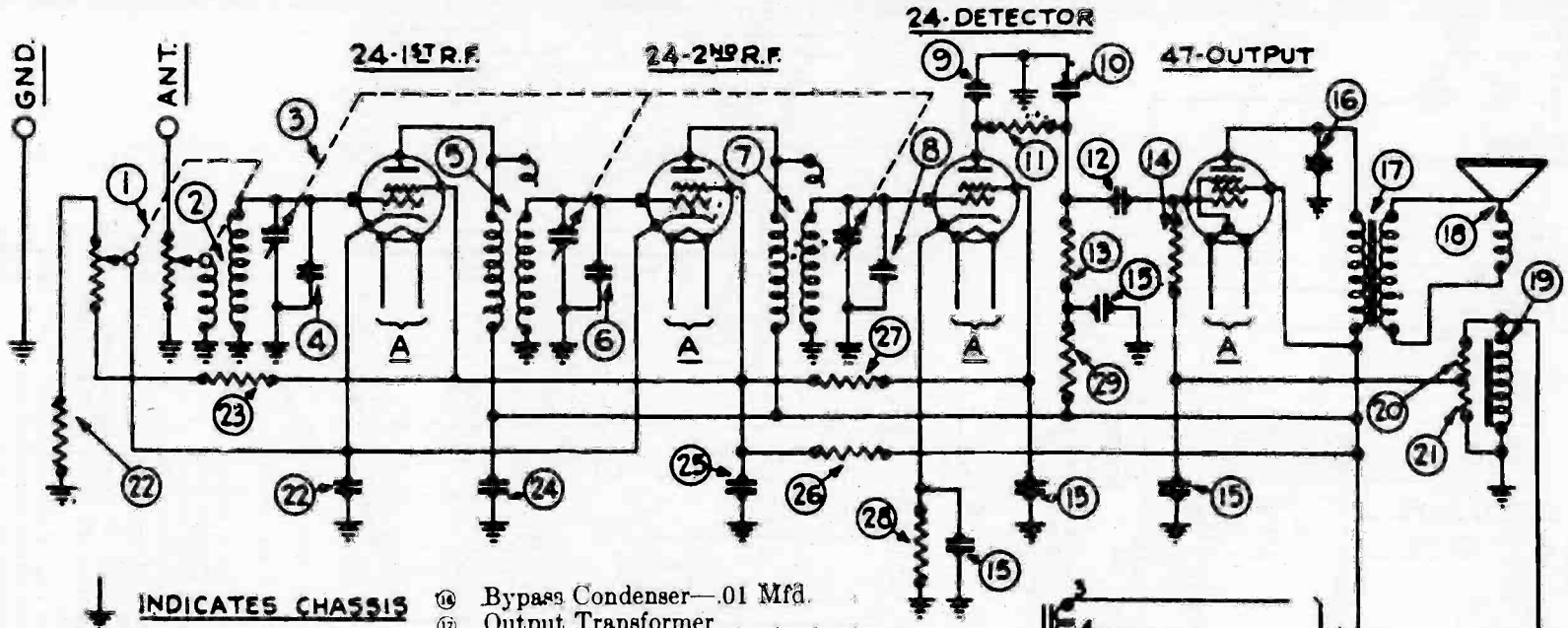

INDICATES CHASSIS

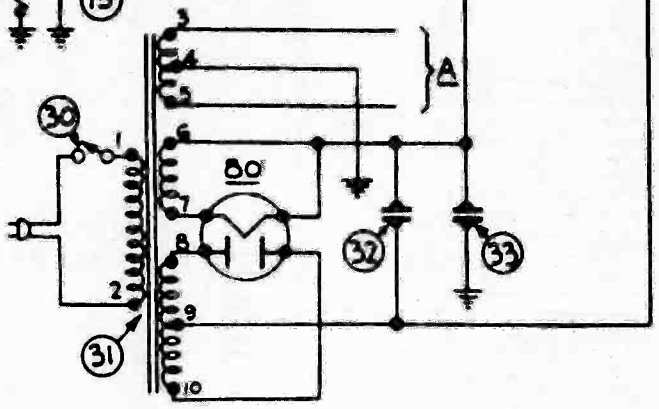

1. Volume Control
2. First R. F. Transformer
3. Gang Condenser
4. Compensating Condenser (Part of Gang Condenser Assembly)
5. Second R. F. Transformer
6. Compensating Condenser (Part of Gang Condenser Assembly)
7. Third R. F. Transformer
8. Compensating Condenser (Part of Gang Condenser Assembly)
9. Condenser—250 Mmf.
10. Condenser—250 Mmf.
11. Resistor—10,000 Ohms
12. Condenser—.01 Mfd.
13. Resistor—240,000 Ohms
14. Resistor—490,000 Ohms
15. Bypass Condenser (.15 Mfd., .25 Mfd., 2-.5 Mfd., .1 Mfd.) 50-60 cycles
16. Bypass Condenser—.01 Mfd.
17. Output Transformer
18. Voice Coil and Cone Assembly
19. Speaker Field (Assembled with Pot and Frame).
20. Resistor—490,000 Ohms.
21. Resistor—160,000 Ohms.
22. Resistor—150 Ohms and Condenser—.05 Mfd.
23. Resistor—15,000 Ohms
24. Bypass Condenser—.05 Mfd.
25. Bypass Condenser—(.05 Mfd.) (combined with 14)
26. Resistor—25,000 Ohms
27. Resistor—99,000 Ohms
28. Resistor—32,000 Ohms
29. Resistor—99,000 Ohms
30. On-Off Switch
31. Power Transformer—50-60 cycles
32. Electrolytic Condenser—6 Mfd.—50-60 cycles
33. Electrolytic Condenser—10 Mfd. 25-40 cycles
34. Electrolytic Condenser—6 Mfd.—

Philco Radio

MODELS 50 AND 50-A

MANUAL OF MOST-OFTEN-NEEDED RADIO DIAGRAMS

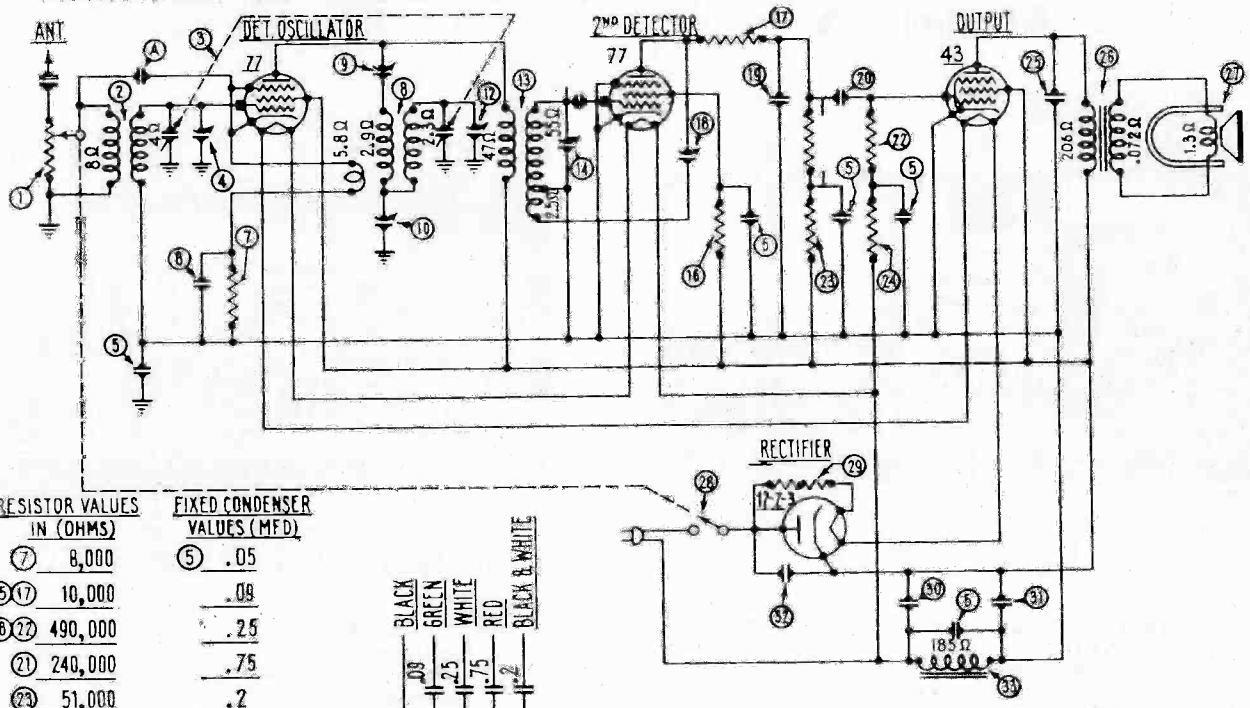

RESISTOR VALUES IN (OHMS)	FIXED CONDENSER VALUES (MFD)
(7) 8,000	(5) .05
(15)(17) 10,000	.08
(18)(22) 490,000	.25
(21) 240,000	.75
(23) 51,000	.2
(24) 99,000	(6) .0014
(29) 216 (TOTAL)	(11) 10.0
	(19) .00025

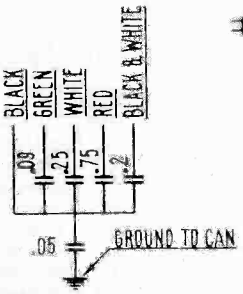

(5) INTERNAL CONNECTIONS

MODEL 53 Philco Radio

I.F. 450 KC.

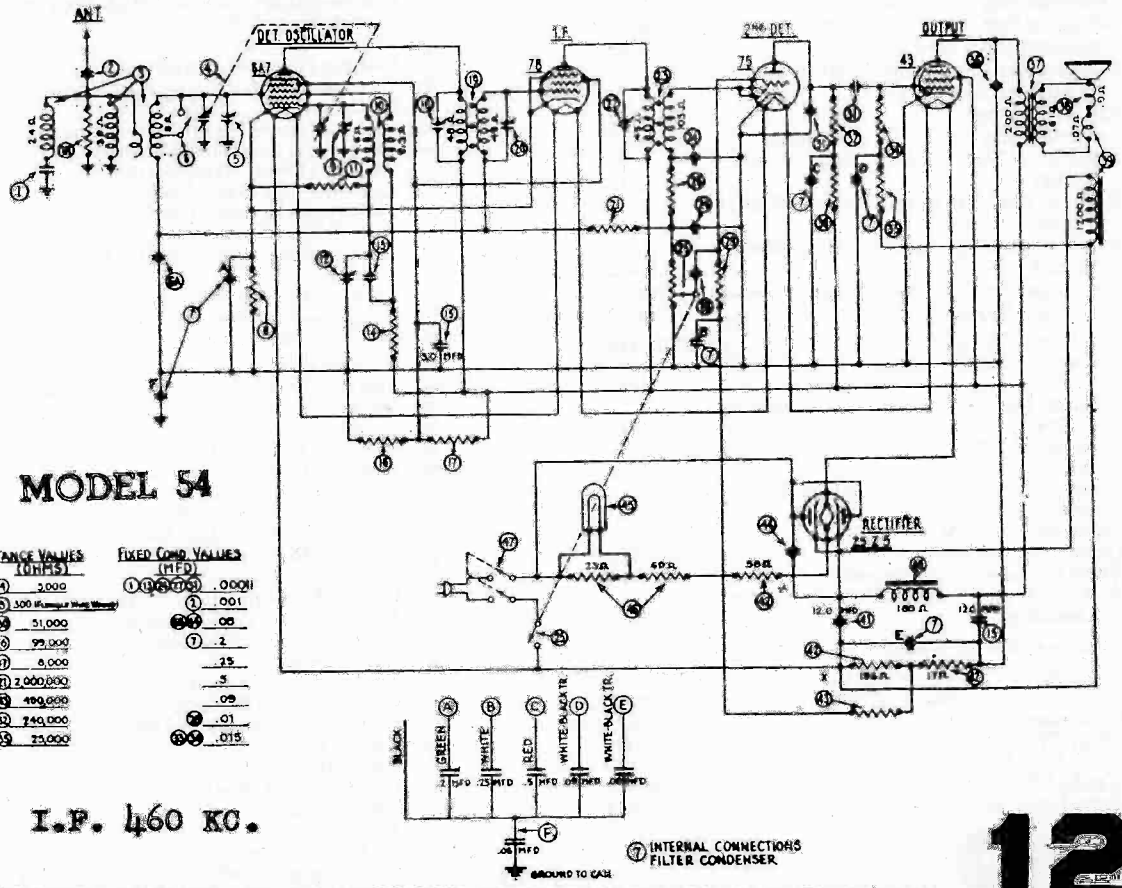

MODEL 54

RESISTANCE VALUES (OHMS)	FIXED COND. VALUES (MFD)
(14)(14) 2,000	(1)(13)(20)(21)(29) .0001
(8) 300 (Kanger Mag Wire)	(1) .001
(11)(20)(29) 51,000	(29)(29) .08
(16) 99,000	(7) .2
(17) 8,000	.25
(21) 2,000,000	.5
(22)(23)(24) 490,000	.09
(32) 240,000	(28) .01
(29) 23,000	(29)(29) .015

I.F. 460 KC.

(7) INTERNAL CONNECTIONS FILTER CONDENSER

COMPILED BY M. N. BEITMAN, SUPREME PUBLICATIONS

Model 53

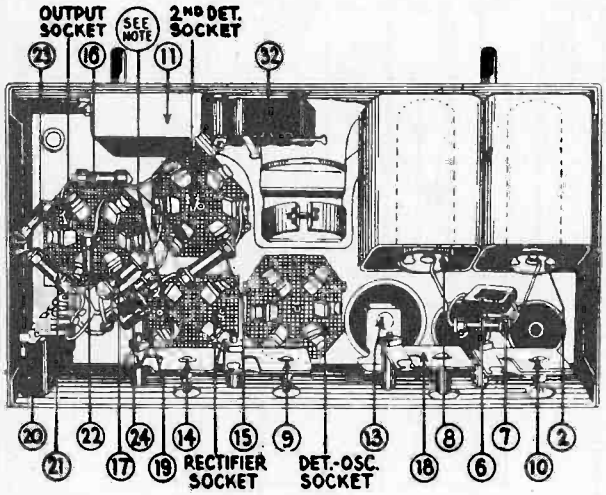

No. on Figs. 2, 3 and 4	Description	Part No.
1	Volume Control	33-5001
2	Antenna Transformer	32-1000
3	Tuning Condenser Assembly	31-1000
4	Compensating Condenser (Part of Tuning Condenser Assembly)	
5	Filter Condenser Block (.05-.09-.25-.75-.2 Mfd.)	30-4000
6	Condenser (.0014 Mfd.)	7007
7	Resistor (8,000 ohms) Gray-Black-Red	5838
8	Oscillator Transformer	32-1001
9	Compensating Condenser (I.F. Primary)	04000-A
10	Compensating Cond. (Low Frequency)	04000-S
11	Condenser (10.0 Mfd.)	7440
12	Compensating Condenser (Part of Tuning Condenser Assembly)	
13	I.F. Transformer	32-1002
14	Compensating Cond. (I.F. Secondary)	04000-A
15	Resistor (10,000 ohms) Brown-Black-Orange	4412
16	Resistor (490,000 ohms) Yellow-White-Yellow	4517
17	Resistor (10,000 ohms) Brown-Black-Orange	4412
18	Compensating Condenser (Regeneration)	04000
19	Condenser (.00025 Mfd.)	3082
20	Condenser (.01 Mfd.)	3903-AM
21	Resistor (240,000 ohms) Red-Yellow-Yellow	4410
22	Resistor (490,000 ohms) Yellow-White-Yellow	4517
23	Resistor (51,000 ohms) Green-Brown-Orange	4518
24	Resistor (99,000 ohms) White-White-Orange	4411
25	Condenser (.015 Mfd.)	3793-S
26	Output Transformer	32-7000
27	Voice Coil and Cone Assembly	36-3000
28	A. C. Switch (Part of Volume Control Assembly)	33-5001
29	Resistors (2 Wire Wound-108 ohms each)	33-3000 33-3001
30	Electrolytic Condenser (8 Mfd.)	30-2000
31	Electrolytic Condenser (8 Mfd.)	30-2000
32	Condenser (.05 Mfd.)	3615-E
33	Filter Choke	32-7001
	Tube Shield	7172
	Knobs (Both Controls)	03064
	Four Prong Socket	7544

Model 54

(A. C.—D. C.)

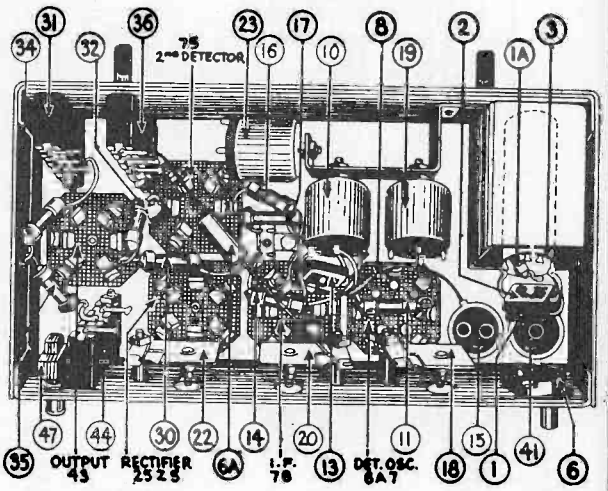

No. on Figs.	Description	Part No.
1	Condenser	30-1005
1a	Resistor (Green-Black-Red)	6096
2	Condenser	5215
3	Antenna Transformer Assembly	32-1117
4	Tuning Condenser Assembly	31-1027
5	Compensating Condenser (Part of 4)	.....
6	Wave Band Switch	42-1027
6a	Condenser	30-4020
7	Filter Condenser (Block)	30-4023
8	Resistor (Flexible)	33-3010
9	Compensating Condenser (High Frequency 1400) Part of 4	.....
10	Oscillator Coil	32-1118
11	Resistor (Green-Brown-Orange)	4518
12	Compensating Condenser (Low Freq.)	04000-B
13	Condenser	4519
14	Resistor (Green-Black-Red)	5310
15	Electrolytic Condenser (Double)	30-2002
16	Resistor (White-White-Orange)	4411
17	Resistor (Gray-Black-Red)	5838
18	Compensating Cond. (1st I. F. Primary)	04000-A
19	1st I. F. Transformer	32-1115
20	Compensating Condenser (1st I. F. Secondary)	04000-A
21	Resistor (Red-Black-Green)	5872
22	Compensating Cond. (2nd I. F. Primary)	04000-A
23	2nd I. F. Transformer	32-1116
24	Condenser (Double)	8035-G
25	Volume Control and "On-Off" Switch	33-5010
26	Resistor (Green-Brown-Orange)	4518
28	Condenser	3903AM
29	Resistor (Yellow-White-Yellow)	6097
30	Resistor (Green-Brown-Orange)	4518
31	Condenser (Double)	8035-F
32	Resistor (Red-Yellow-Yellow)	4410
34	Resistor (Yellow-White-Yellow)	4517
35	Resistor (Red-Green-Orange)	4516
36	Condenser	3793-Y
37	Output Transformer	32-7020
38	Voice Coil and Cone Assembly	36-3029
39	Field Coil and Pot Assembly	36-3040
40	Filter Choke	32-7036
41	Electrolytic Condenser	30-2001
42	Resistor (Wire Wound)	33-3012
43	Resistor (Yellow-White-Yellow)	6097
44	Condenser	3615-B
45	Pilot Lamp	4567
46	Resistor (Wire Wound)	33-3011
47	Safety Switch	42-1026
	Tube Shield	28-1130
	Six Prong Socket	7547
	Seven Prong Socket	27-6005

COMPILED BY M. N. BEITMAN, SUPREME PUBLICATIONS

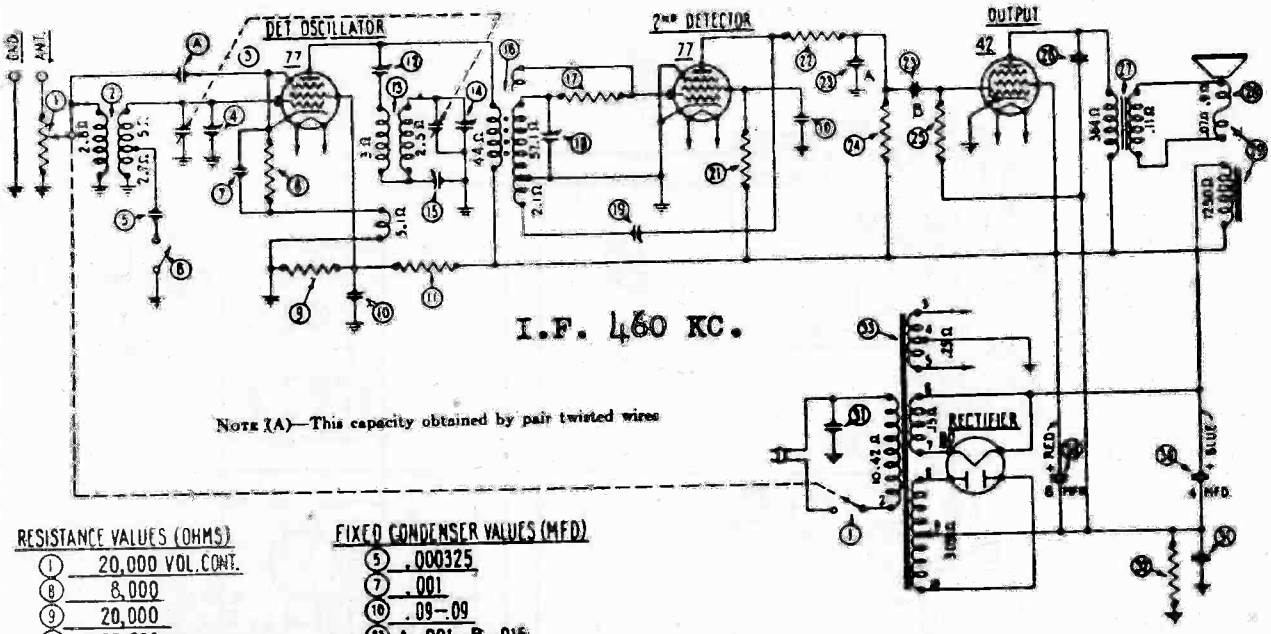

RESISTANCE VALUES (OHMS)	
1	20,000 VOL. CONT.
8	8,000
9	20,000
11	25,000
17	4000,000
21	1,000,000
22	10,000
24	240,000
25	490,000
32	325 (WIRE WOUND)

FIXED CONDENSER VALUES (MFD)	
5	.000325
7	.001
10	.09–.09
23	A–.001–B–.015
26	.006
31	.015–.015

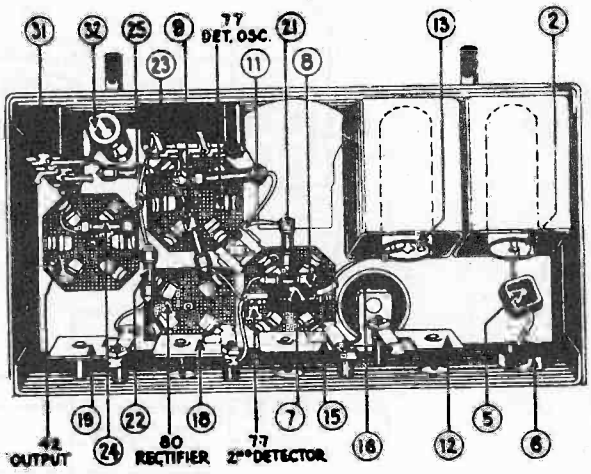

PHILCO

MODEL 57

No. on Figs.	Description	Part No.
1	Volume Control and "On-Off" Switch	33-5011
2	Antenna Transformer	32-1153
3	Tuning Condenser Assembly	31-1035
4	Compensating Condenser (Antenna; Part of 3)	
5	Condenser	30-1004
6	Wave Band Switch	42-1027
7	Condenser	5215
8	Resistor (Gray-Black-Red)	5838
9	Resistor (Red-Black-Orange)	6650
10	Condenser (Double)	4989-C
11	Resistor (Red-Green-Orange)	3656
12	Compensating Condenser (I. F. Primary)	04000-A
13	Oscillator Coil	32-1023
14	Compensating Cond. (High Frequency—1400 kilocycles) (Part of 3)	
15	Compensating Cond. (Low Frequency)	04000-S
16	I. F. Transformer	32-1155
17	Resistor (Yellow-Black-Green)	6010
18	Compensating Cond. (I. F. Secondary)	04000-D
19	Compensating Condenser	04000
21	Resistor (Brown-Black-Green)	4409
22	Resistor (Brown-Black-Orange)	4412
23	Condenser (Double)	7762-B
24	Resistor (Red-Yellow-Yellow)	4410
25	Resistor (Yellow-White-Yellow)	3769
26	Condenser	7625-E
27	Output Transformer	32-7041
28	Voice Coil and Cone Assembly	36-3029
29	Field Coil and Pot Assembly	36-3081
30	Electrolytic Condenser (Double)	30-2004
31	Condenser (Double)	3793-R
32	Resistor (Wire Wound)	7465
33	Power Transformer	32-7046
	Tube Shield	28-1107
	Four Prong Socket	7544
	Six Prong Socket	7547

Model 60

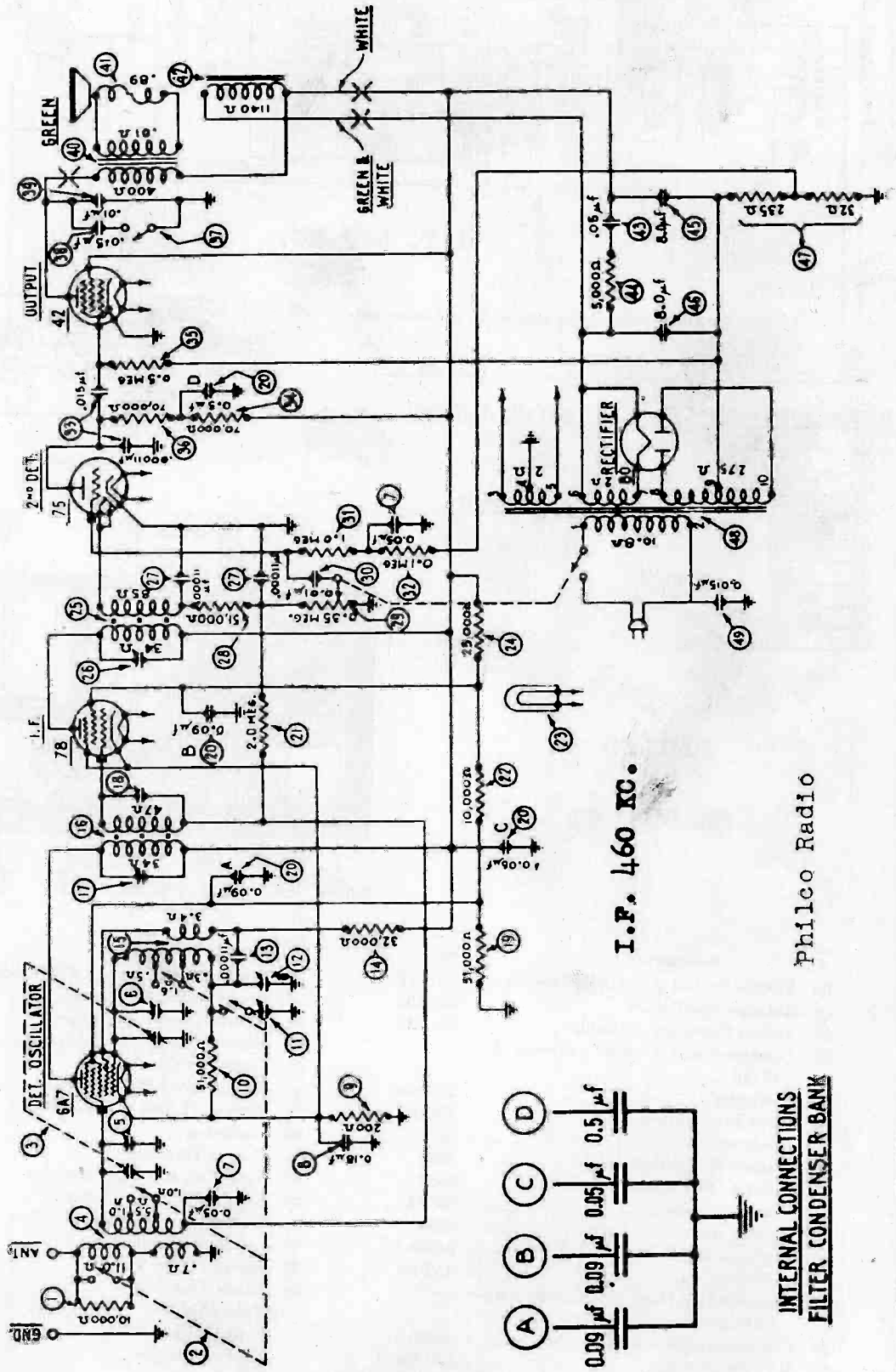
WHITE
GREEN & WHITE
GREEN
OUTPUT
42
2ND DET.
75
I.F.
78
DET. OSCILLATOR
6A7
RECTIFIER
ANT.
GND.
I.F. 460 KC.
Philco Radio
INTERNAL CONNECTIONS
FILTER CONDENSER BANK

MODELS 70 AND 70-A

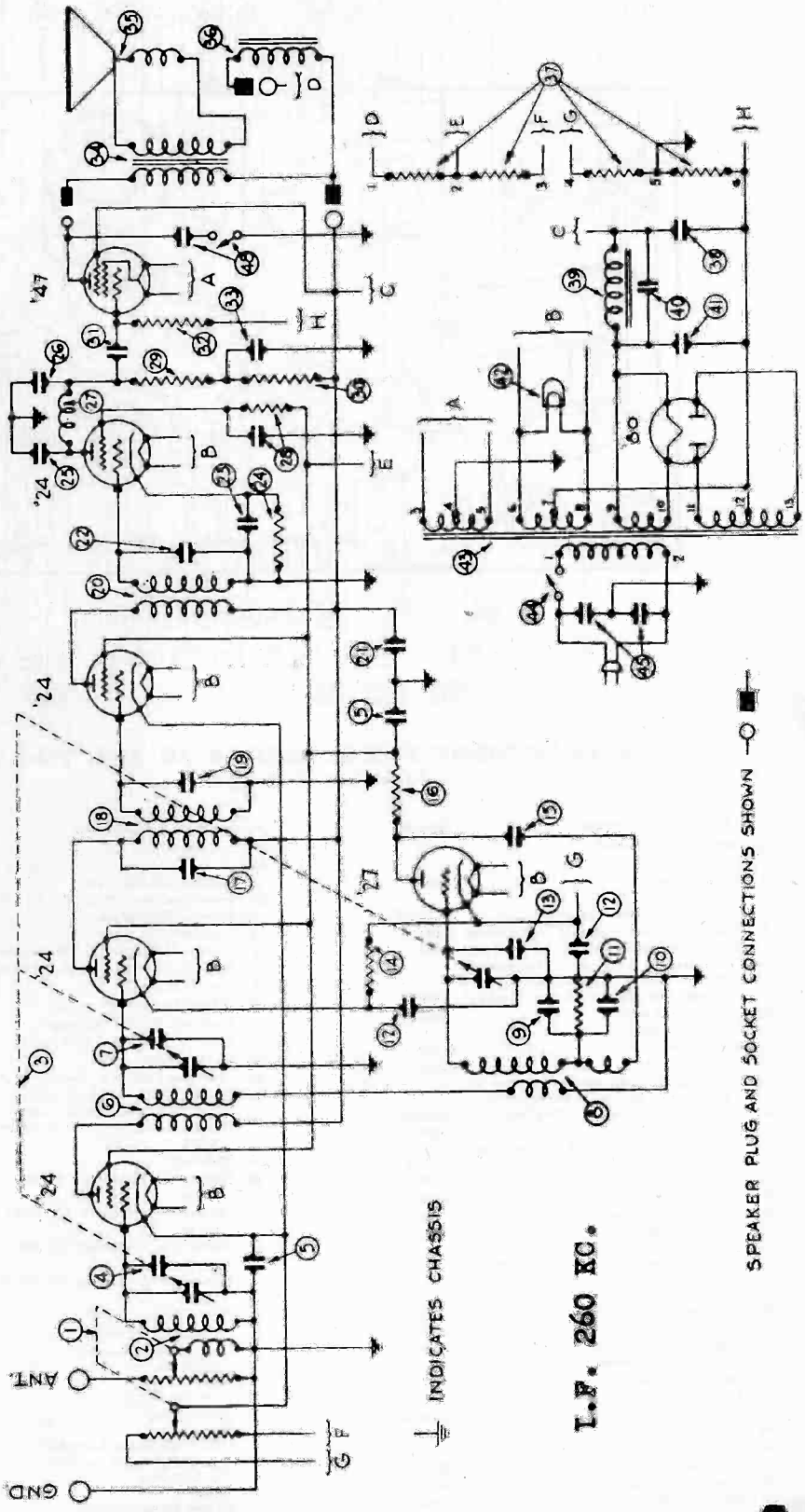

I.F. 260 KC.

Philco Radio

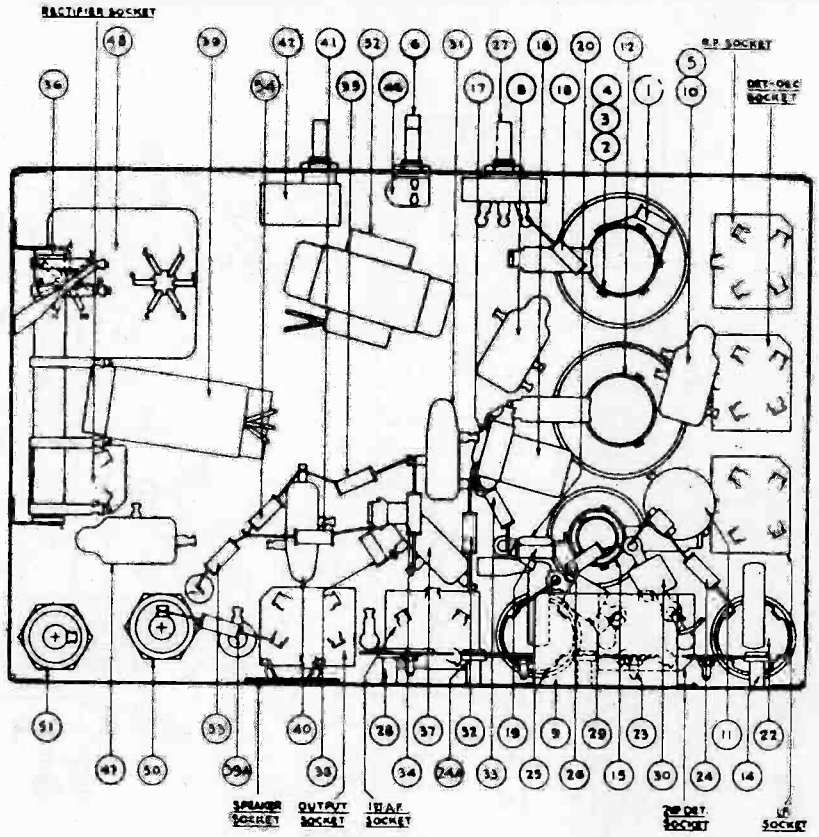

REPLACEMENT PARTS MODELS 70 AND 70-A

(Above Serial No. B-22,000)

No. on Figs. 3 and 4	Description	Part No.
1	Resistor (10,000 ohms)	4112
2, 3, 4	Antenna Coil	04330
5	Condenser (.05 mfd.) double	3615-AF
6	Tuning Condenser Assembly 50-60 cycles	04164
	Tuning Condenser Assembly 25-40 cycles	04165
7	Compensating Condenser — Antenna — (Part of Tuning Condenser Assembly)	
8	Condenser (.09 mfd. and 200 ohm Resistor)	4989-L
9	Condenser (.5 mfd.)	3583
10	Combined with 8	
11	R. F. Choke	04198
12	Interstage Coil	04185
13	Compensating Condenser — Detector — (Part of Tuning Condenser Assembly)	
14	Compensating Condenser—Coupling	04000-M
15	Oscillator Coil	04188
16	Compensating Condenser — Low Frequency	04000-F
17	Condenser (410 mmf.)	5120
18	Resistor (2,000,000 ohms)	5872
19	Resistor (10,000 ohms)	4412
20	Condenser (700 mmf.)	4520
21	Compensating Condenser — High Frequency—(part of Tuning Condenser Assembly)	
22	First I. F. Transformer	04190
23	Compensating Condenser—First I. F.	04000-M
24	Resistor (2,000,000 ohms)	5872
24A	Compensating Condenser 2nd I.F. Primary	04000-M
25	Second I. F. Transformer	08038
26	Resistor (99,000 ohms)	4411
27	Volume Control	6015
28	Compensating Condenser—Second I. F.	04000-M
29	Condenser (110 mmf.)	4519
30	Condenser (110 mmf.)	4519
31	Condenser (.01 mfd.)	3903-G
32	Resistor (4,000,000 ohms)	6010
33	Resistor (1,000,000 ohms)	4409
34	Resistor (70,000 ohms)	5285
35	Resistor (25,000 ohms)	4516
36	B. C. Resistor	04196
37	Condenser (.01 mfd.)	3903-T
38	Resistor (490,000 ohms)	4517
39	Filter Condenser Block (.05, .25 1.5 mfd.)	04194
39A	Resistor (3,000 ohms)	5309
40	Condenser (.01 mfd.)	3903-U
41	Resistor (330,000 ohms) 50-60 cycles	6046
	Resistor (490,000 ohms) 25-40 cycles	4517
42	Tone Control	03637
43	Output Transformer	2673
44	Voice Coil & Cone Assembly	02996
45	Field Coil Assembled with Pot	02966
46	On-Off Switch	4096
47	Condenser (.015 mfd. Double)	3793-H
48	Power Transformer (50-60 cycles)	5117
	Power Transformer (25-40 cycles)	5118
	Power Transformer (50-60 cycles, 230 volts)	5119
49	Pilot Light	3469
50	Electrolytic Condenser (8 mfd.) 50-60 cycles	4916
	Electrolytic Condenser (14 mfd.) 25-40 cycles	5725
50	Electrolytic Condenser (8 mfd.) 50-60 cycles	4916
	Electrolytic Condenser (10 mfd.) 25-40 cycles	5142
51	Filter Choke	4819
52	Resistor (51,000 ohms)	4518
53	Resistor (490,000 ohms)	4517
	Tube Shield	04166
	Knob (Large)	03064
	Knob (Small)	03437
	Knob Spring	4147
	Grid Clip	4897
	Five Prong Socket Assembly	4956
	Four Prong Socket Assembly	4955
	Dial Complete	63031
	Bezel	5312
	Chassis Mounting Screw	W-468
	Mounting Washer	W-315
	Rubber Washer	5189

Philco Mod. 70-70A
270-370

Tubes 80 Rect.
3-24
2-47

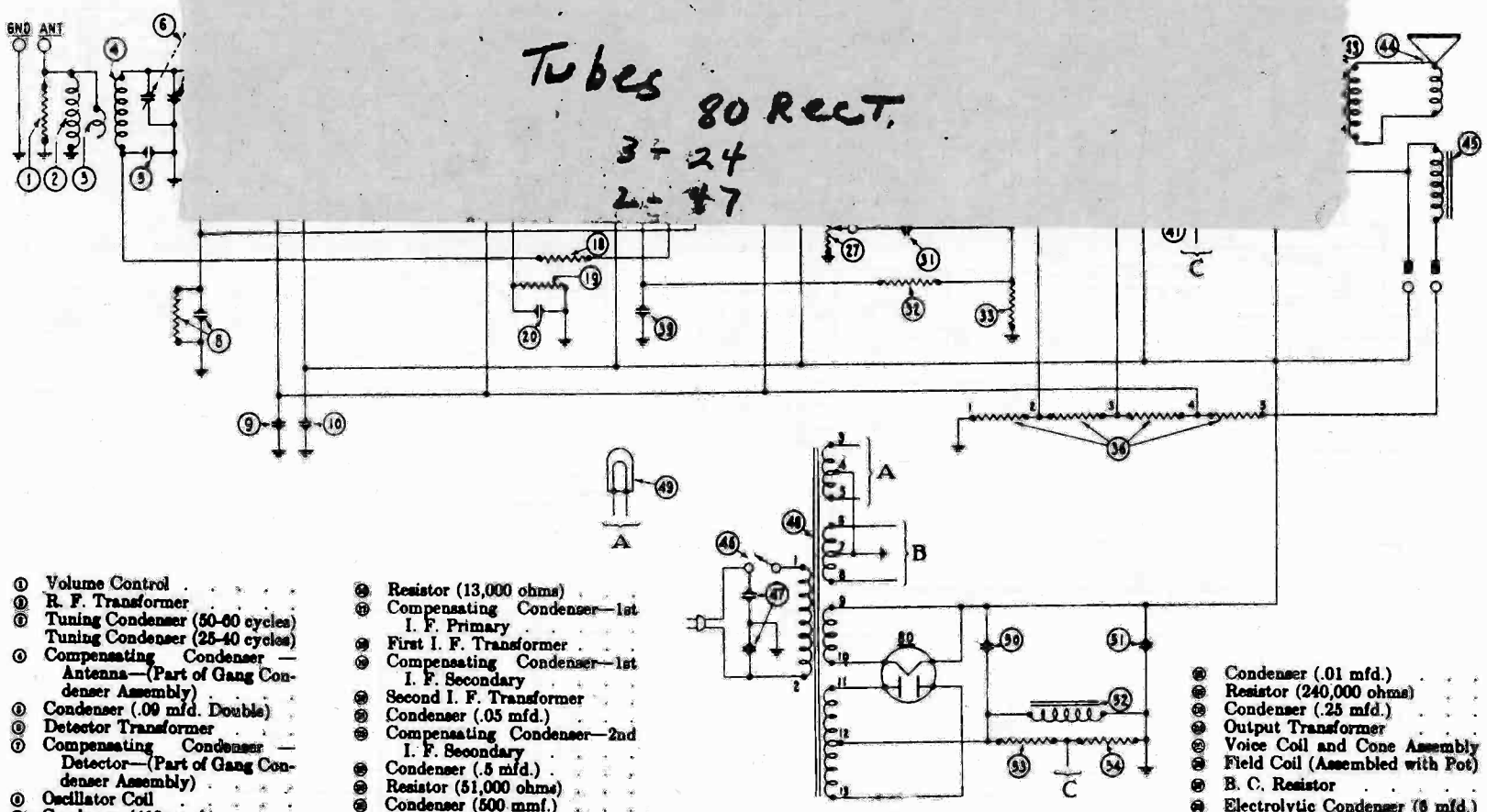

1. Volume Control
2. R. F. Transformer
3. Tuning Condenser (50-60 cycles) Tuning Condenser (25-40 cycles)
4. Compensating Condenser — Antenna—(Part of Gang Condenser Assembly)
5. Condenser (.09 mfd. Double)
6. Detector Transformer
7. Compensating Condenser — Detector—(Part of Gang Condenser Assembly)
8. Oscillator Coil
9. Condenser (410 mmf.)
10. Compensating Condenser—Low Frequency
11. Resistor (51,000 ohms)
12. Condenser (.09 mfd. Double)
13. Compensating Condenser—High Frequency — (Part of Gang Condenser Assembly)
14. Resistor (5,000 ohms)
15. Condenser (110 mmf.)
16. Resistor (13,000 ohms)
17. Compensating Condenser—1st I. F. Primary
18. First I. F. Transformer
19. Compensating Condenser—1st I. F. Secondary
20. Second I. F. Transformer
21. Condenser (.05 mfd.)
22. Compensating Condenser—2nd I. F. Secondary
23. Condenser (.5 mfd.)
24. Resistor (51,000 ohms)
25. Condenser (500 mmf.)
26. Condenser (250 mmf.)
27. R. F. Choke
28. Condenser (.09 Combined with 250 ohm Resistor)
29. Resistor (240,000 ohms)
30. Resistor (45,000 ohms) 50-60 cycles
Resistor (99,000 ohms) 25-40 cycles
31. Condenser (.01 mfd.)
32. Resistor (240,000 ohms)
33. Condenser (.25 mfd.)
34. Output Transformer
35. Voice Coil and Cone Assembly
36. Field Coil (Assembled with Pot)
37. B. C. Resistor
38. Electrolytic Condenser (6 mfd.) 50-60 cycles
39. Choke
40. Condenser (.09 mfd.) 50-60 cycles
41. Electrolytic Condenser (6 mfd.) 50-60 cycles
42. Pilot Light
43. Power Transformer (50-60 cycles)
44. "On-Off" Switch
45. Condenser (.015 mfd. Double)

I.F. 260 KC.

PHILCO

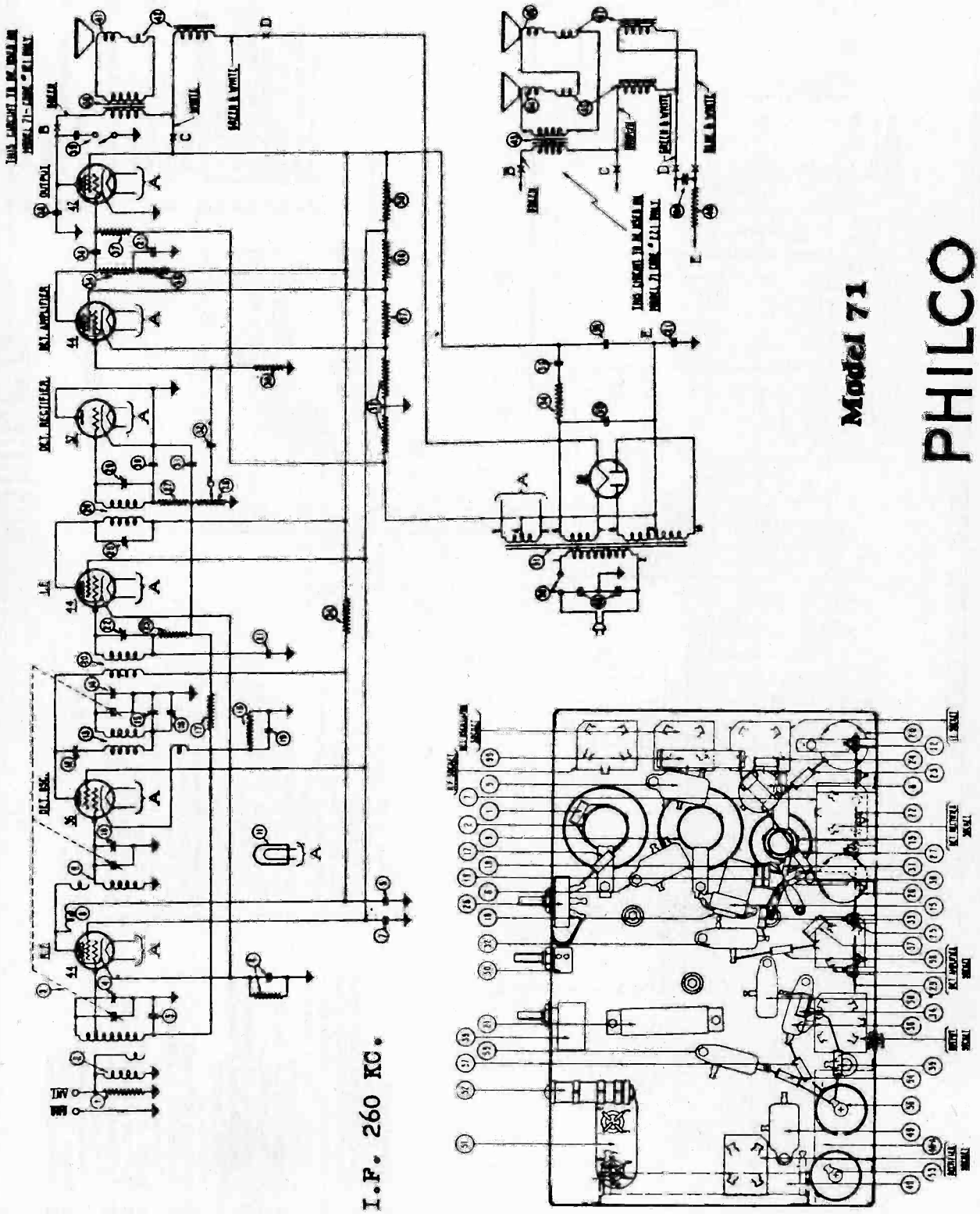
PHILCO
Model 71
I.F. 260 KC.

Replacement Parts for Model 71 Series

1	Resistor (10,000 ohms)	4412
2	R. F. Transformer	04339
3	Tuning Condenser (50-60 cycles)	04733
4	Tuning Condenser (25-40 cycles)	04734
5	Condenser (.05 Mfd. double)	3615-AF
6	Condenser (.09 Mfd. and 200 ohm resistor)	4989-L
7	Condenser (.5 Mfd.)	3583
8	R. F. Choke	04198
9	Detector Transformer	04185
10	Compensating Condenser—Detector—Part of tuning condenser assembly	
11	Pilot Light	6608
12	Compensating Condenser — 1st I. F. primary	04000-M
13	Oscillator Coil	04186
14	Compensating Condenser—High frequency—Part of tuning condenser assembly	
15	Compensating condenser—Low frequency	04000-F
16	Condenser (410 Mmf.) (Yellow and Orange)	5120
17	Resistor (1,000,000 ohms)	4409
18	Resistor (15,000 ohms)	6208
19	Condenser (700 Mmf.) (White and Yellow)	4520
20	First I. F. Transformer	04190
21	Filter Condenser Bank (2 —.05, .25 Mfd.)	04731
22	Compensating Condenser — 1st I. F. secondary	04000-M
23	Resistor (1,000,000 ohms)	4409
24	Resistor (1,000 ohms)	5837
25	Compensating Condenser—2nd I. F. primary	04000-M
26	Second I. F. Transformer	04319
27	Resistor (99,000 ohms)	4411
28	Volume Control	6499
29	Compensating Condenser—2nd I. F. secondary	04000-M
30	Condenser (110 Mmf.) (Blue and Golden Yellow)	4519
31	Condenser (110 Mmf.) (Blue and Golden Yellow)	4519
32	Condenser (.01 Mfd.)	3903-J
33	Resistor (1,000,000 ohms)	4409
34	Resistor (70,000 ohms)	5385
35	Resistor (25,000 ohms) Single Speaker	4516
	Resistor (51,000 ohms) Twin Speaker Models	4518
36	Condenser (.01 Mfd.)	3903-N
37	Resistor (490,000 ohms)	4517
38	Condenser (.01 Mfd.)	3903-AA
39	Tone Control	04757
40	Output Transformer — single speaker models	2580
41	Voice Coil and Cone assembly	02823
42	Speaker Field and Bucking Coil assembled with pot—(K-7) single speaker models	02761
43	Output Transformer — Twin speaker models	2564
44	Voice Coil and cone assembly	02823
45	Speaker Field and Bucking Coil assembled with pot—(K-10) Twin speaker models	02767
46	Voice coil and cone assembly	02823
47	Speaker field assembled with pot —(K-9) Twin speaker models	02762
48	Resistor (5620 ohms) wire wound —Twin speaker models	6451
49A	Condenser (.25 Mfd.) Twin Speaker Models	04997
49	Condenser (.015 Mfd. Double)	3793-H
50	On-off Switch	6498
51	Power Transformer—50-60 cycles—single speaker	6454
	Power Transformer—25-40 cycles—single speaker	6455
	Power Transformer—50-60 cycles—230 volts—single speaker	6456
	Power Transformer—50-60 cycles—twin speaker	6457
	Power Transformer—25-40 cycles—twin speaker	6458
	Power Transformer—50-60 cycles—230 volts—twin speaker	6459
52	Resistor—wire wound (245 ohms and 185 ohms)	6452
53	Electrolytic Condenser (6 Mfd.) (50-60 cycles) single speaker	6453
	8 Mfd. Twin speaker	6707
54	Resistor (10,000 ohms)	4412
55	Condenser (.05 Mfd.)	3615-G
56	Electrolytic Condenser (6 Mfd.) (50-60 cycles) single speaker	4916
	8 Mfd. Twin speaker	6706
57	Resistor (5,000 ohms)	5310
58	Resistor (5,000 ohms)	5310
59	Resistor (13,000 ohms)	6450
	Tube Shield (small)	5387
	Tube Shield (large)	04735

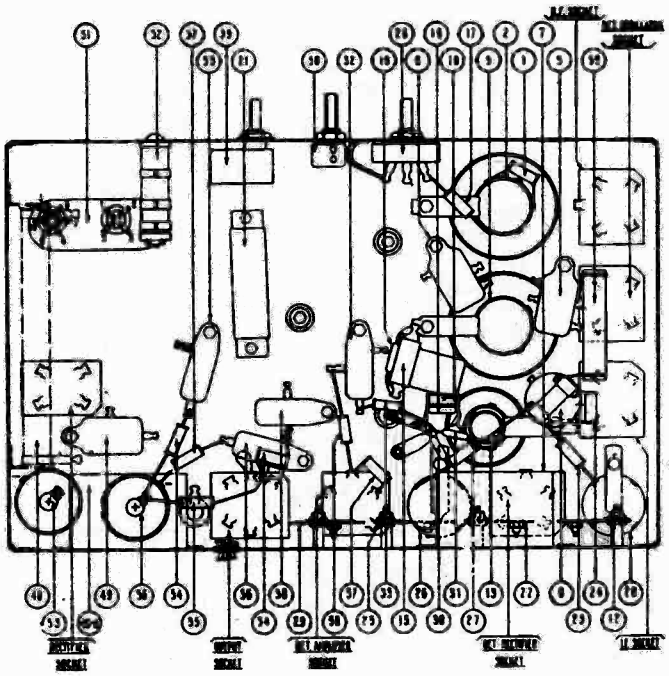

Philco Radio

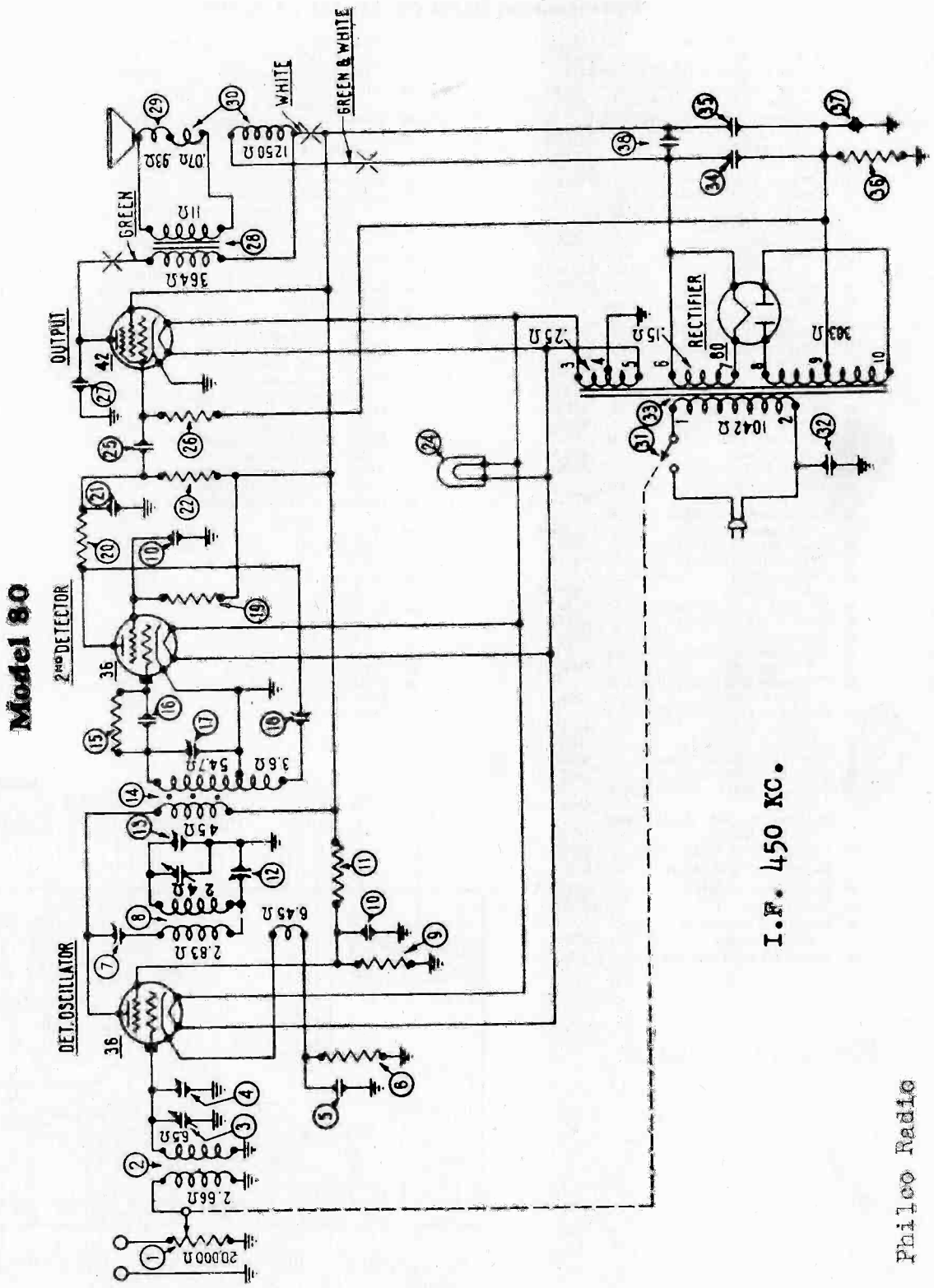

Philco Radio

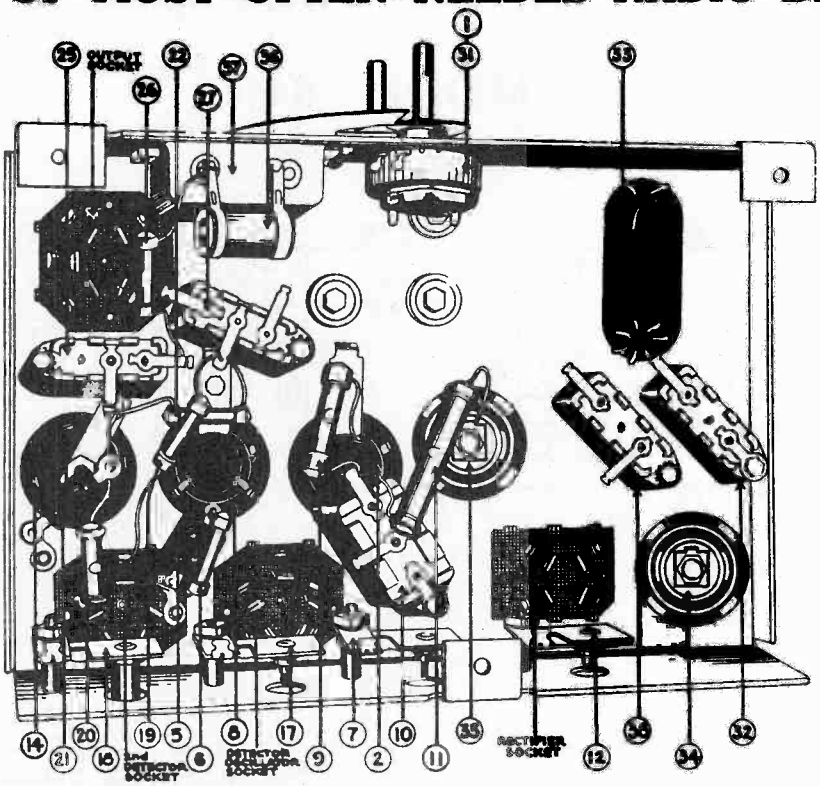

REPLACEMENT PARTS MODEL 80

No. on Figs. 2 and 3	Description	Part No.
1	Volume Control—Combined with On-Off Switch	7439
2	Antenna Transformer	05831
3	Tuning Condenser Assembly	05794
4	Compensating Condenser — Antenna — Part of Tuning Con. Assembly	
5	Condenser (710 Mmf.) White and Yellow	4520
6	Resistor (10,000 Ohms)	4412
7	Compensating Condenser—I.F. Primary	04000-A
8	Oscillator Coil	05832
9	Resistor (9,000 Ohms)	7501
10	Condenser (.09 Twin)	4989-B
11	Resistor (16,000 Ohms)	7500
12	Compensating Condenser — Low Frequency	04000-S
13	Compensating Condenser — High Frequency — Part of Tuning Con. Assembly	
14	I.F. Transformer	05834
15	Resistor (4,000,000 Ohms) Mounted on I.F. Transformer	6010
16	Condenser (50 Mmf.) White—Mounted on I.F. Transformer	3774
17	Compensating Condenser—I.F. Secondary	04000-D
18	Compensating Condenser	04000
19	Resistor (1,000,000 Ohms)	4409*
20	Resistor (10,000 Ohms)	4412
21	Condenser (1,000 Mmf.) Green and White	5215
22	Resistor (240,000 Ohms)	4410
23	Pilot Light	6608
24	Condenser (.015 Mfd.)	3793-B
25	Resistor (490,000 Ohms)	4517*
26	Condenser (.006 Mfd.)	7625-B*
27	Output Transformer	2660
28	Voice Coil and Cone Assembly	02861
29	Speaker Field and Bucking Coil Assembled with Pot	02677*
30	On-Off Switch—Combined with Volume Control	7439
31	Condenser (.01 Mfd.)	3903-AH*
32	Power Transformer 50-60 Cycles	7421
	Power Transformer 25-40 Cycles	7422
	Power Transformer 50-60 Cycles, 230 Volts	7423
33	Electrolytic Condenser (8.0 Mfd.)	6707
34	Electrolytic Condenser (4.0 Mfd.)	7467
35	Resistor (325 Ohms) Wire Wound	7465*
36	Electrolytic Condenser—Dry—(10 Mfd.)	7440*
37	Condenser (.01 Mfd.)	3903-AJ*
	Bezel	7417
	Dial Complete	05828
	Tube Shield	7172
	Knob (Large)	03063
	Knob (Small)	03064
	Knob Spring	5262
	Grid Clip	4897
	Four Prong Socket Assembly	5026
	Five Prong Socket Assembly	4956
	Six Prong Socket Assembly	6417
	Chassis Mounting Screw	W-567
	Chassis Mounting Washer	W-315
	Rubber Washer	5189
	Pilot Lamp Shield	5760

* A number of circuit changes were made on chassis of run No. 5 and above. This run number is rubber stamped in a star on the back of the chassis. Refering to Figs. 2 and 3, the condenser 27 connects to the B- end of resistor 25 instead of to ground. The bucking coil - that section of 29 in series with the voice coil - is shorted out. The 10 mfd. dry electrolytic condenser 37 is eliminated, and replaced with a substitute .015 section combined with 24, part 3793R. The .01 mfd. condenser 38 is eliminated. The positions of 18 23 and 38 are changed in the chassis from that shown in Fig. 3.

MODEL 84

Philco Radio

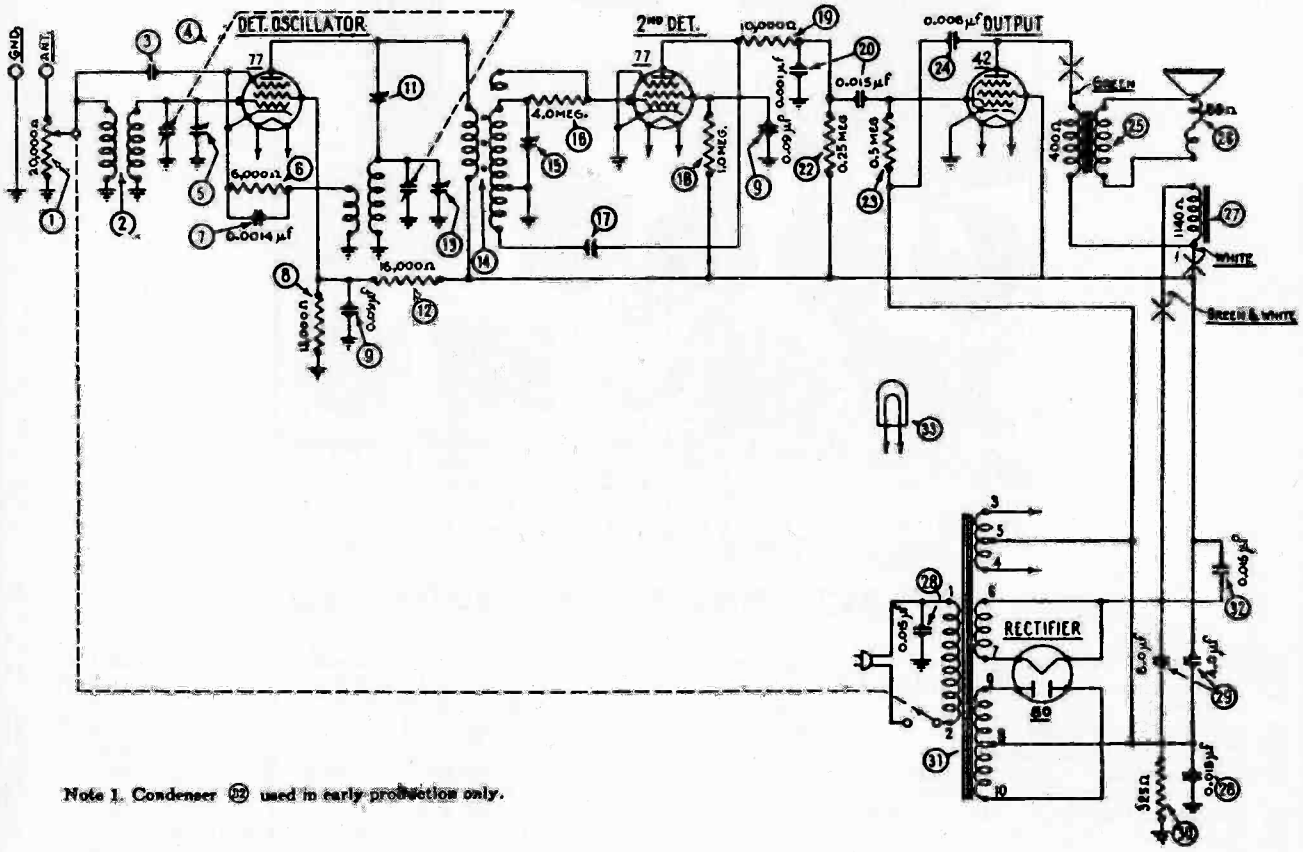

Note 1. Condenser (22) used in early production only.

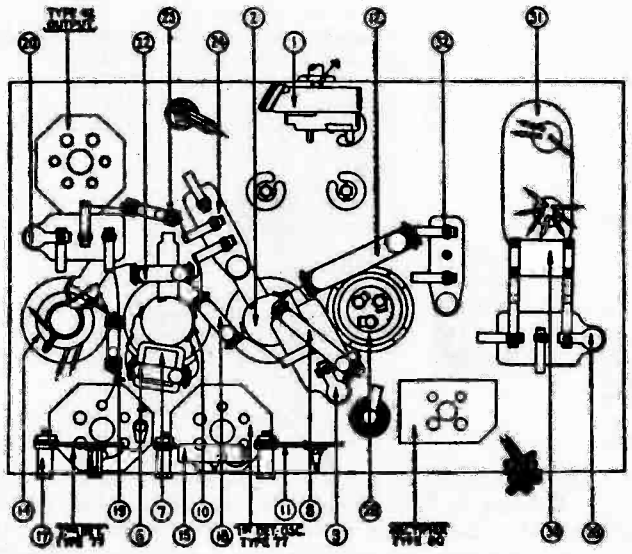

I. F. 460 K. C.

PHILCO Model 86 and 82

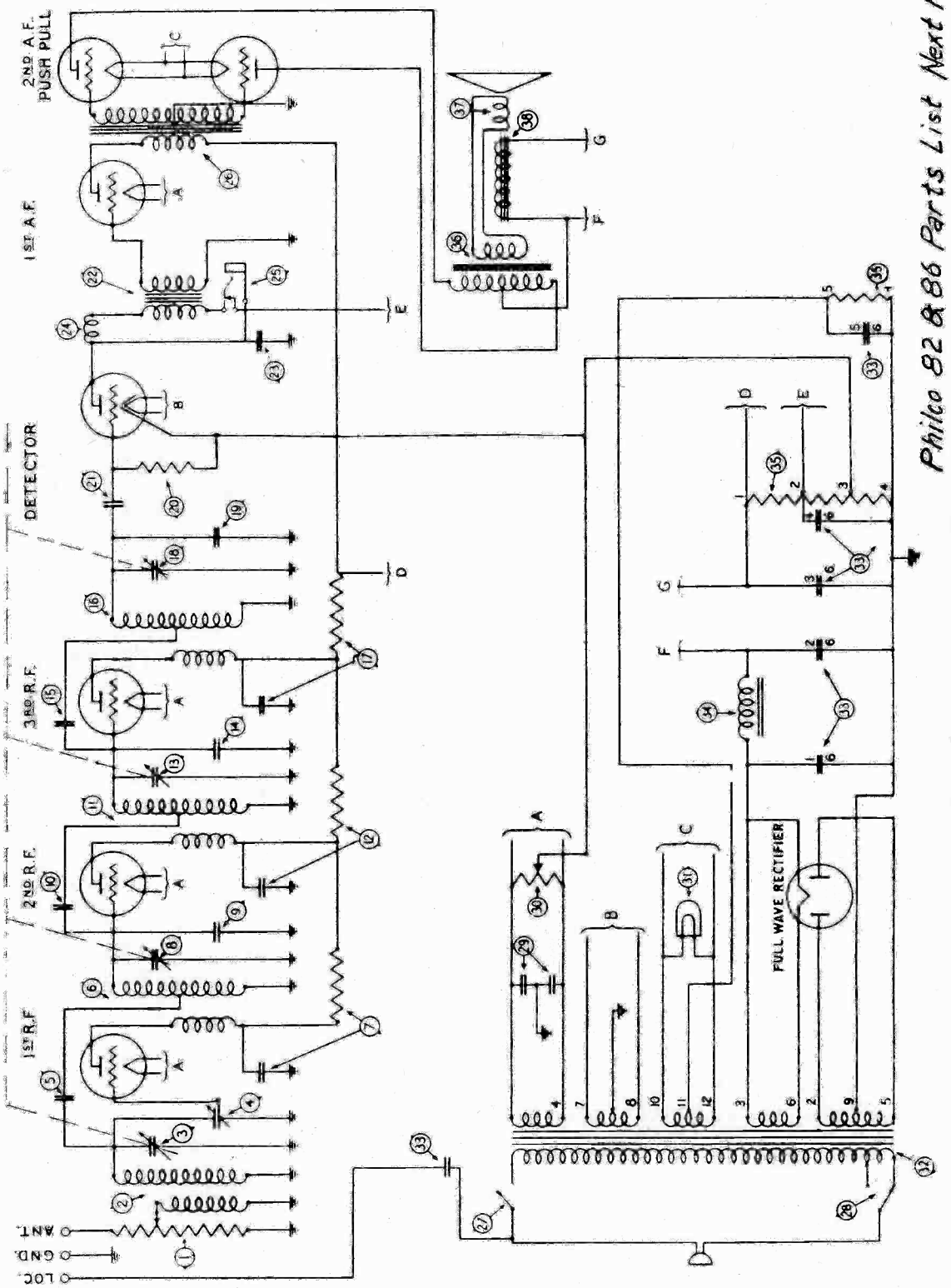

Philco 82 & 86 Parts List Next Page

Replacement Parts for Model 86

	Part Name	Part No.
1	Volume Control	3076
2	R. F. Transformer (Antenna Tuning)	3075-B
8 - 9 - 15 - 14	Tuning Condenser (complete with drum and scale)	3001-B
4	Range Control	3133
9 - 10 - 16	Neutralizing Condenser	3025-A
6 - 11 - 18	R. F. Transformer	3075-A
7 - 12 - 17	By-Pass Condenser (.1 mfd. with Plate Resistor Winding)	3292-A
5 - 13 - 19	Compensating Condensers	3282-A
20	Grid Leak	3083
21	Grid Condenser	3082
22	Audio Transformer	3241
23	By-Pass Condenser (.001 mfd.)	3081
24	Detector R. F. Choke	3256-A
25	Phonograph Pick-Up Jack	3087
26	Push-Pull Input Transformer	3242
27	Power-Toggle Switch	3253
28	Primary Tap Switch	3116
29	Filament By-Pass Condenser (2 sections .5 mfd.)	3080
30	6-Ohm Hum Adjuster	3096
31	Pilot Lamp	3105
32	Power Transformer (60 cycle)	3271
33	Filter Condenser Block (60 cycle)	3246
34	Filter Choke Coil	3269
35	B-C Section Resistor	3232
36	Push-Pull Output Transformer	2897
	Speaker Plug	2871-A
37	Speaker Cone and Voice Coil	2898
38	Speaker Field Coil	2896
	Cable Spring	3012
	Control Knob Tuning Condenser	3035-A
	Control Knob (Volume and Range Control)	3036-A
	226 Tube Socket	3051-A
	Condenser Drive Cable	3054-A
	Knob Spring	3103
	Fibre Adjusting Wrench	3164
	280 Tube Socket	3169-A
	171 Tube Socket	3170-A
	Pilot Lamp Socket Assembly	3202-A
	Jack Insulator Nut	3231
	Terminal Panel Assembly	3236-A
	Speaker Socket	3247-A
	227 Tube Socket, Spring Type	3263-A
	Jack Insulator	3272
	A.C. Attachment Cord and Plug	L-943-A
	Wiring Cable	L-1037
	Speaker Cable	L-1039
	Socket Wrench for Speaker Mounting Bolts	3312

Note:—When ordering replacements for 25-cycle Receivers (Model 83) use the following part numbers instead of those given above. All other part numbers remain the same.

32	Power Transformer (25 cycle)	3278
33	Filter Condenser Block (25 cycle)	3279

Replacement Parts for Model 87

	Part Name	Part No.
1	Volume Control	3076
2	R. F. Transformer (Antenna Tuning)	3075-B
8 - 9 - 15 - 14	Tuning Condenser (Complete with Drum and Scale)	3001-B
4	Range Control	3133
9 - 10 - 16	Neutralizing Condenser	3441-A
6 - 11 - 18	R. F. Transformer	3075-A
7 - 12 - 17	By-Pass Condenser (.1 mfd. with Plate Resistor Winding)	3292-A
5 - 13 - 19	Compensating Condensers	3435-A
20	Grid Leak	3083
21	Grid Condenser	3082
22	Audio Transformer	3241
23	By-Pass Condenser (.001 mfd.)	3081
24	Detector R. F. Choke	3256-A
25	Push-Pull Input Transformer	3242
26	Power Toggle Switch	3501
27	Filament By-Pass Condenser (2 Sections .5 mfd.)	3080
28	6-Ohm Hum Adjustor	3096
29	Pilot Lamp	3463
30	Power Transformer	3400
31	Filter Condenser Block	3401
32	Filter Choke Coil (First)	3422
33	Filter Choke Coil (Second)	3472
34	Detector Resistor	3542
35	B-C Resistor	3399
36	Push-Pull Output Transformer	2848
37	Speaker Cone and Voice Coil	2844-A
38	Speaker Field Coil	2850
	Speaker Plug	2871-A
	Cable Spring	3012
	Control Knob Tuning Condenser	3301
	Control Knob (Volume and Range Control)	3300
	Condenser Drive Cable	3484
	Knob Spring	3305
	Fibre Adjusting Wrench	3164
	4-Hole Tube Socket	3423-A
	Pilot Lamp Socket Assembly	3202-A
	Terminal Panel Assembly	3236-A
	Speaker Socket	3464-A
	5-Hole Tube Socket	3442-A
	A.C. Attachment Cord and Plug	L-943-A
	Speaker Cable	L-1056-A
	Socket Wrench for Speaker Mounting Bolts	3312
	Tuning Scale	3398
	Oscillator Kit	3540
	Wood Switch Plug	3037

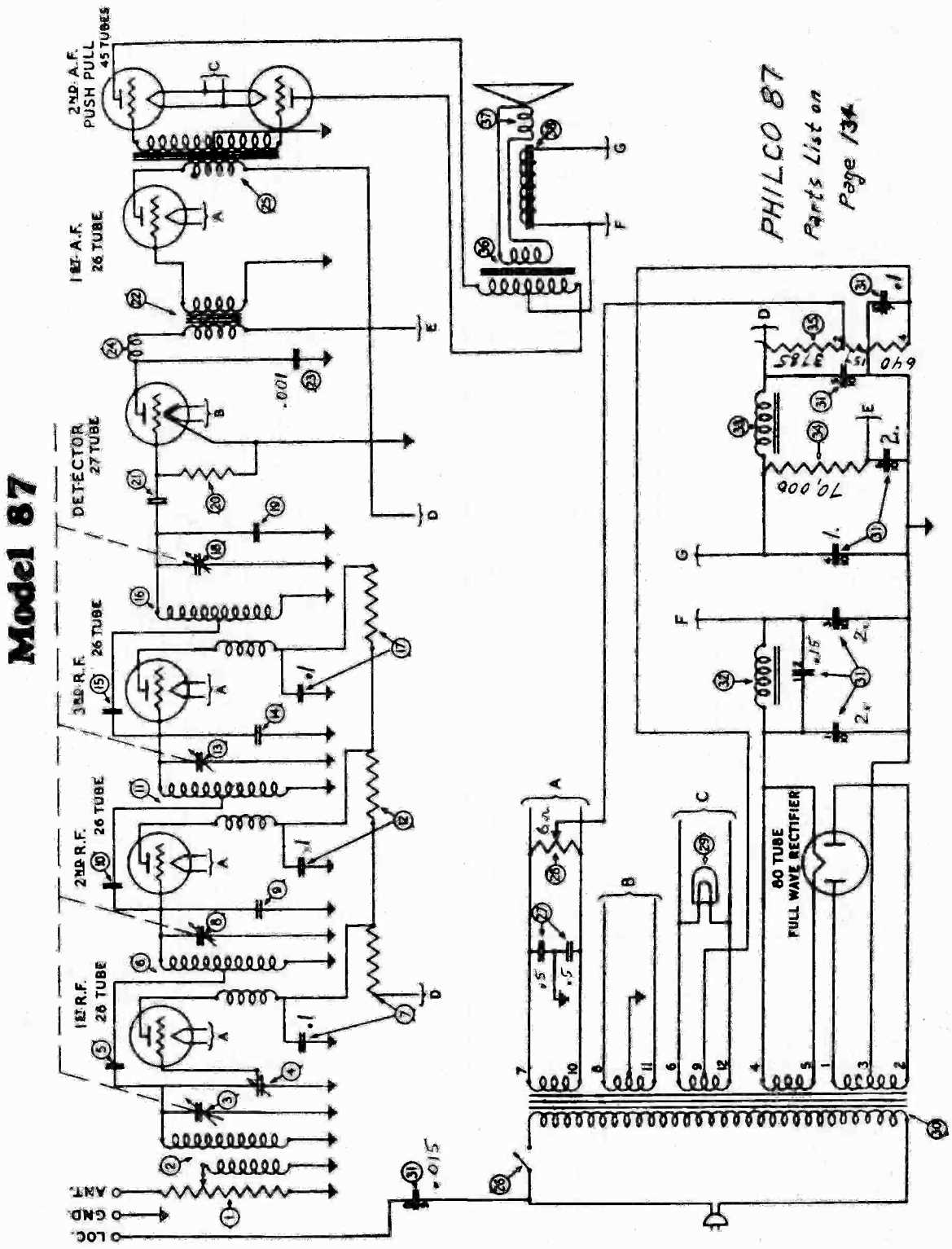
Model 87
PHILCO 87
Parts List on Page 134
2ND A.F. PUSH PULL 45 TUBES
1ST A.F. 26 TUBE
DETECTOR 27 TUBE
3RD R.F. 26 TUBE
2ND R.F. 26 TUBE
1ST R.F. 26 TUBE
80 TUBE FULL WAVE RECTIFIER
ANT.
GND.
LOC.

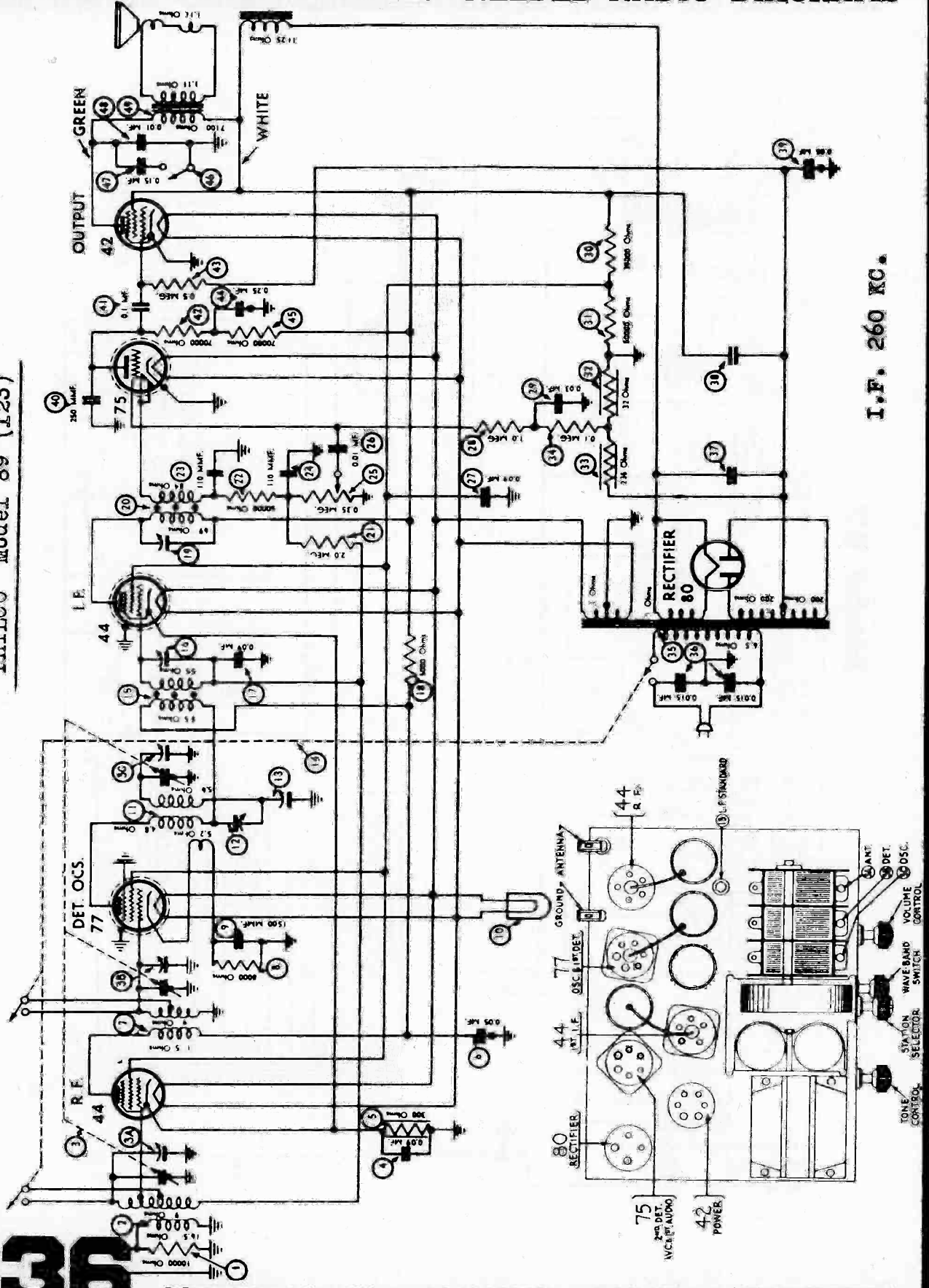
PHILCO Model 89 (123)
I.F. 260 KC.
OUTPUT
42
GREEN
WHITE
75
I.F.
44
DET. OCS.
77
R.F.
44
RECTIFIER
80
GROUND
ANTENNA
77
OSC. 1ST DET.
44
1ST I.F.
80
RECTIFIER
75
2ND DET. AVC & 1ST AUDIO
42
POWER
44
R.F.
I.F. STANDARD
ANT.
DET.
OSC.
VOLUME CONTROL
WAVE BAND SWITCH
STATION SELECTOR
TONE CONTROL

Models 90 and 90-A

WITH 2- TYPE 45 TUBES

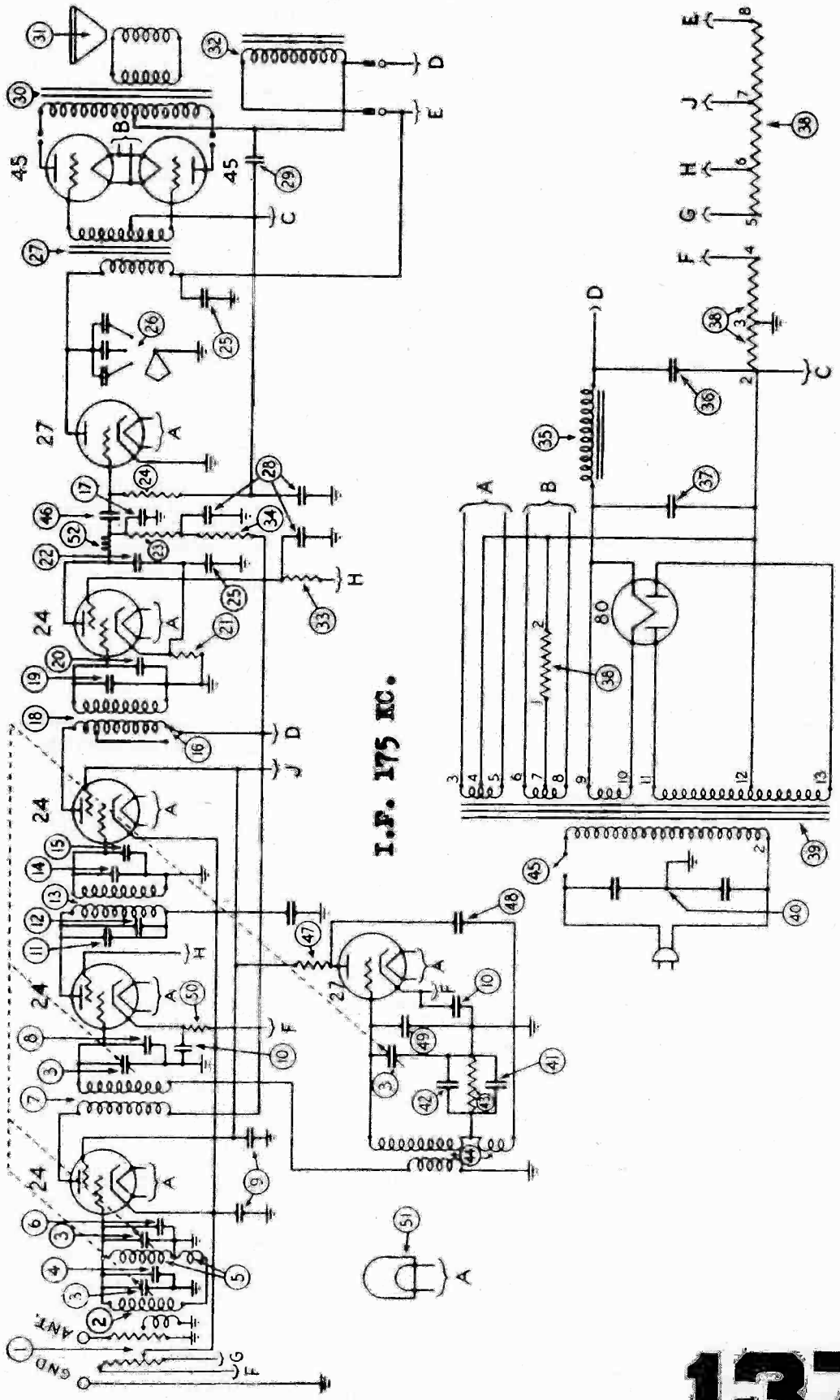

MANUAL OF MOST-OFTEN-NEEDED RADIO DIAGRAMS

Models 90 and 90-A

WITH 2- TYPE 45 TUBES

No. on Figs. 3 and 4	Description	Part No.
1	Volume Control	5039
2	1st R. F. Transformer	03013
3	Gang Condenser—50 to 60 cycles	03001
	Gang Condenser—25 to 40 cycles	03078
4	Compensating Condenser (Part of Tuning Condenser Assembly)	
5	2nd R. F. Transformer	03014
6	Compensating Condenser (Part of Tuning Condenser Assembly)	
7	1st Det. Transformer	03015
8	Compensating Condenser (Part of Tuning Condenser Assembly)	
9	Condenser .09 M. F. (Double)	4989-C
10	Condenser .09 M. F. (Double)	4989-B
11	Fixed Condenser .00011 } Assembled	3772-C
12	Compensating Condenser }	
13	1st I. F. Transformer	03009
14	Compensating Condenser } Assembled	03051
15	Fixed Condenser .00011 }	
16	Normal Maximum Switch	3116
17	Condenser (.000035 mf)	4990
18	2nd I. F. Transformer	03143
19	Compensating Condenser } Assembled	03051
20	Fixed Condenser .00011 }	
21	Resistor—50,000 Ohms	4518
22	Condenser .00035	4990
23	Resistor—250,000 Ohms	4410
24	Resistor—1,000,000 Ohms	4409
25	Condenser .5 M. F. (Double)	03024
26	Tone Control	4037-A
27	1st Audio Transformer	4962
28	Condensers 2—.25 M. F. and 1—.5 M. F.	03020
29	Condenser .05 M. F.	3615-G
30	Output Transformer:	
	H_2 (For Large Cone Assembly)	2848
	K_2 (For Small Cone Assembly)	2766
31	Voice Coil Assembly and Cone:	
	H_2 (Large Cone)	02997
	K_2 (Small Cone)	02996
32	Speaker Field—Assembled with Pot and Frame	
33	Resistor—250,000 Ohms	3768
34	Resistor—250,000 Ohms	4410
35	Filter Choke	4951
36	Condenser 6 M. F. Electrolytic Type (50-60 cycles)	4916
	Condenser 10 M. F. Electrolytic Type (25-40 cycles)	5142
37	Condenser 6 M. F. Electrolytic Type (25-40) and (50-60) cycles	4916
38	B. C. Resistor	4953
39	Power Transformer (50 to 60 cycles)	4938
	Power Transformer (25 to 40 cycles)	4939

No. on Figs. 3 and 4	Description	Part No.
40	Condenser .015 M. F. (Double)	3793-E
41	Condenser .0007 M. F. } Assembled	03050
42	Compensating Condenser }	
43	Resistor—50,000 Ohms	4237
44	Oscillator Coil	03016
45	On-Off Switch	4095
46	Condenser .001 M. F.	5215
47	Resistor—13,000 Ohms	3766
48	Condenser .00011 M. F.	4519
49	Compensating Condenser (Part of Tuning Condenser Assembly)	
50	Resistor—5,000 Ohms	5310
51	Pilot Bulb	3463
52	R. F. Choke	03066
	Line Cord and Plug	L-943
	Tube Shield	03002
	Knob (large) Dial Control	4966-A
	Spring (Dial Knobs)	4147
	Knobs (small) Tone and Volume Control	4950-A
	Knob (switch)	4200-A
	Grid Clip	4897
	Speaker Plug and Cable	L-1194-A
	Grommet for R. F. Transformer Shield	3747
	Rectifier Tube Socket	5026
	Four Prong Socket Assembly	4955
	Five Prong Socket Assembly	4956
	Speaker Socket	4957
	Volume Control Insulator	4092
	Volume Control Insulator	4298
	Fahnstock Clip	L-1126
	Finishing Rosettes	4287
	Speaker Mounting Screws (3 used)	W-493
	Speaker Mounting Screws (1 used)	W-492
	Dial	3021
	Mica for Gang Condenser Compensating Condenser	3473
	Insulating Washer for Compensating Condenser	2500
	Tuning Condenser Mounting Washer	3914
	Tuning Condenser Mounting Washer	3915
	Tuning Condenser Mounting Sleeve	3916
	Spring for Tuning Condenser	4255
	Bezel	3009
	Complete Pilot Bracket	03081-A
	Dial Disc	4925
	Light Shield Screen	4937
	Friction Drive Bracket	4930
	Brass Collar for Friction Drive	4935
	Shaft	4931

REPLACEMENT PARTS—MODELS 90 and 90-A RECEIVERS

(Above Serial No. 237,001)

No. on Figs. 3 and 4	Description	Part No.
1	Resistor (10,000 ohms)	4412
2	First R. F. Transformer	03360
3	Gang Condenser (50-60 cycles)	03001
	Gang Condenser (25-40 cycles)	03078
4	Compensating Condenser (part of gang condenser assembly)	
5	Second R. F. Transformer	03014
6	Compensating Condenser (part of gang condenser assembly)	
7	First Detector Transformer	03015
8	Compensating Condenser (part of gang condenser assembly)	
9	Compensating Condenser (First I. F. Primary)	03315
10	First I. F. Transformer	03009
11	Compensating Condenser (First I. F. Secondary)	03315
12	Compensating Condenser (Second I. F. Primary)	03317
13	Second I. F. Transformer	03345
14	Condenser (110 mmf.)	4519
15	Resistor (51,000 ohms)	4518
16	Resistor (51,000 ohms)	4518
17	Resistor (99,000 ohms)	4411
18	By-Pass Condenser (.01 mfd.)	3903-M
19	Condenser (.00025 mfd.)	3082
20	Volume Control	5366
21	Resistor (51,000 ohms)	4518
22	Resistor (70,000 ohms)	5385
23	By-Pass Condenser (.01 mfd.)	3903-M
24	Condenser (1-.1 mfd., 1-.13 mfd., 2-.25 mfd.)	03325
25	Resistor (240,000 ohms)	4410
26	Resistor (25,000 ohms)	3656
27	Resistor (25,000 ohms)	3656
28	By-Pass Condenser (.01 mfd.)	3903-P
29	Resistor (240,000 ohms)	4410
30	Condenser (.25 mfd., 1 mfd.)	03327
31	Tone Control	4037-A
32	Output Transformer	2673

No. on Figs. 3 and 4	Description	Part No.
33	Voice Coil Assembly and Cone:	
	H_2 (Large Cone)	02997
	K_2 (Small Cone)	02996
34	Speaker Field (Assembled with pot and frame)	
35	By-Pass Condenser (.05 mfd.)	3615-W
36	Resistor (490,000 ohms)	4517
37	Oscillator Coil	03016
38	By-Pass Condenser (.09 mfd.) double	4989-G
39	Compensating Condenser } Assembled	03050
40	Condenser (.0007 mfd.) }	
41	Resistor (51,000 ohms)	4518
42	Resistor (5,000 ohms)	5310
43	Compensating Condenser (part of tuning condenser assembly)	
44	Condenser (110 mmf.)	4519
45	Resistor (51,000 ohms)	4518
46	By-Pass Condenser (.05 mfd.)	3615-U
47	By-Pass Condenser (.05 mfd.)	3615-E
48	Resistor (490,000 ohms)	4517
49	Resistor (70,000 ohms)	5385
50	Resistor (25,000 ohms)	4516
51	Resistor (240,000 ohms)	3768
52	Condenser (.015 mfd.) double	3793-E
53	On-Off Switch	4095
54	Power Transformer (50-60 cycles)	5362
	Power Transformer (25-40 cycles)	5363
	Power Transformer (50-60 cycles, 220 volts)	5364
55	Choke	4951
56	Condenser (6 mfd.) Electrolytic type (50-60 cycles)	4916
	Condenser (10 mfd.) Electrolytic type (25-40 cycles)	5142
57	Condenser (6 mfd.) Electrolytic type (50-60 cycles)	4916
	Condenser (10 mfd.) Electrolytic type (25-40 cycles)	5142
58	B. C. Resistor	5365
	Line Cord and Plug	L-943
	Tube Shield (Large)	03378

COMPILED BY M. N. BEITMAN, SUPREME PUBLICATIONS

Models 90 and 90-A

ABOVE SERIAL NO. 237,001
WITH 1-TYPE 47 TUBE

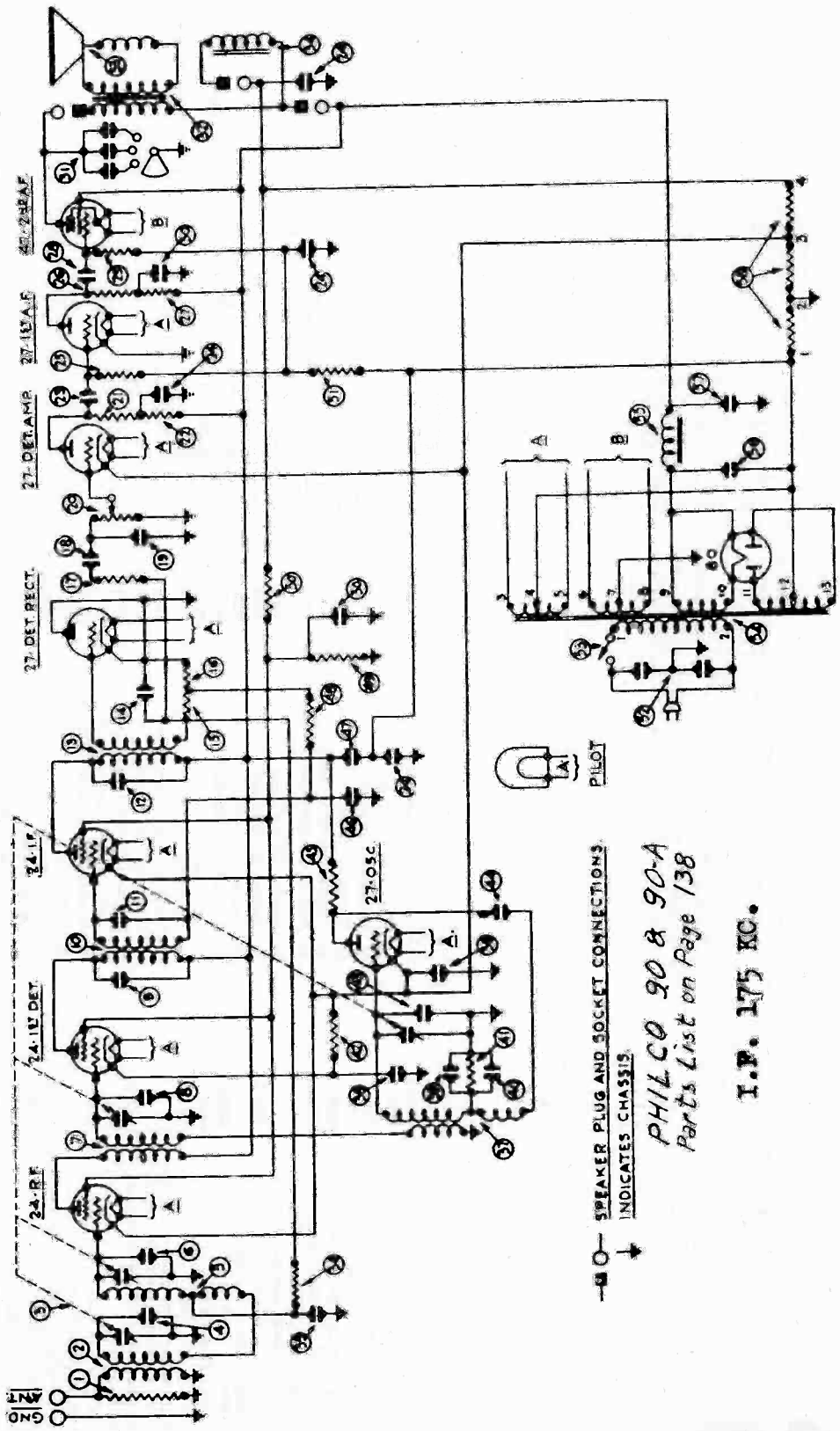

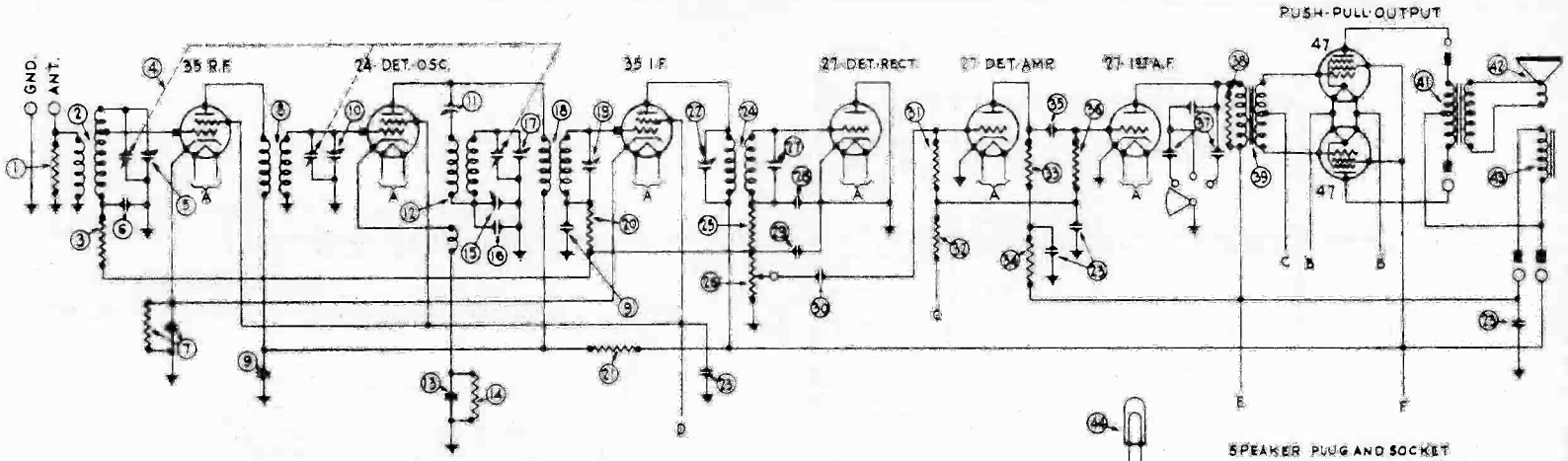

SPEAKER PLUG AND SOCKET CONNECTIONS SHOWN

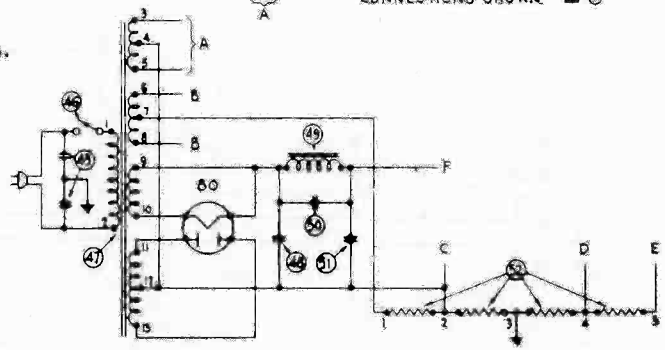

No. on Figs. 1 and 2	Description	Part No.
1	Resistor (10,000 Ohms)	4412
2	Antenna Transformer	04317
3	Resistor (1,000,000 Ohms)	4409
4	Tuning Condenser (50–60 cycles)	04309
	Tuning Condenser (25–40 cycles)	04310
5	Compensating Condenser — Antenna — Part of Tuning Condenser Assembly	
6	Condenser (.05 Mfd.)	3615-L
7	Condenser (.09 Mfd. and 200 Ohm Resistor)	4989-L
8	Detector Transformer	04408
9	Condenser (.09 Mfd.)	3615-AJ
10	Compensating Condenser — Detector Part of Tuning Condenser Assembly	
11	Compensating Condenser—Coupling	04000-M
12	Oscillator Coil	04409
13	Condenser (700 Mmf.)	4520
14	Resistor (15,000 Ohms)	6208
15	Compensating Condenser—Low Frequency	04000-B
16	Condenser (410 Mfd.)	5120
17	Resistor (1,000,000 Ohms)	4409
18	Resistor (1,000 Ohms)	4590
19	Compensating Condenser—Second I.F. Primary	04000-M
20	Condenser (2–.25, 2–.5 Mfd.)	04407
21	Second I.F. Transformer	04320
22	Resistor (99,000 Ohms)	4411
23	Volume Control	6015

No. on Figs. 1 and 2	Description	Part No.
24	Condenser (110 Mmf.)	4519
25	Condenser (110 Mmf.)	4519
26	Condenser (.01 Mfd.)	3903-N
27	Resistor (1,000,000 Ohms)	4517
28	Resistor (490,000 Ohms)	4516
29	Resistor (25,000 Ohms)	4409
30	Resistor (25,000 Ohms)	4409
31	Condenser (.01 Mfd.)	3903-X
32	Resistor (1,000,000 Ohms)	4409
33	Tone Control	03137
34	Resistor (51,000 Ohms)	4518
35	Push-Pull Input Transformer	6064
36	Condenser (1,000 Mmf.)	5215
37	Push-Pull Output Transformer	2635
38	Voice Coil and Cone Assembly	02874
39	Speaker Field Assembled with Pot	02892
40	Pilot Light	3463
41	Condenser (.015 Mfd. Double)	3793-E
42	On-Off Switch	4095
43	Power Transformer (50–60 cycles)	6072
	Power Transformer (25–40 cycles)	6073
	Power Transformer (50–60 cycles, 220 volts)	6074
44	Electrolytic Condenser (6 Mfd.) 50–60 cycles	4916
45	Filter Choke	4819
46	Condenser (.15 Mfd.)	6287-B
47	Condenser (6 Mfd.)	4916
48	B. C. Resistor	6071

I.F. 260 KC.

Philco Radio

MODEL 90

WITH 2- TYPE 47 TUBES

SERIAL No. 32,001 TO B35,000

AND ABOVE B53,100

COMPILED BY M. N. BETTMAN, SUPREME PUBLICATIONS

MODEL 96

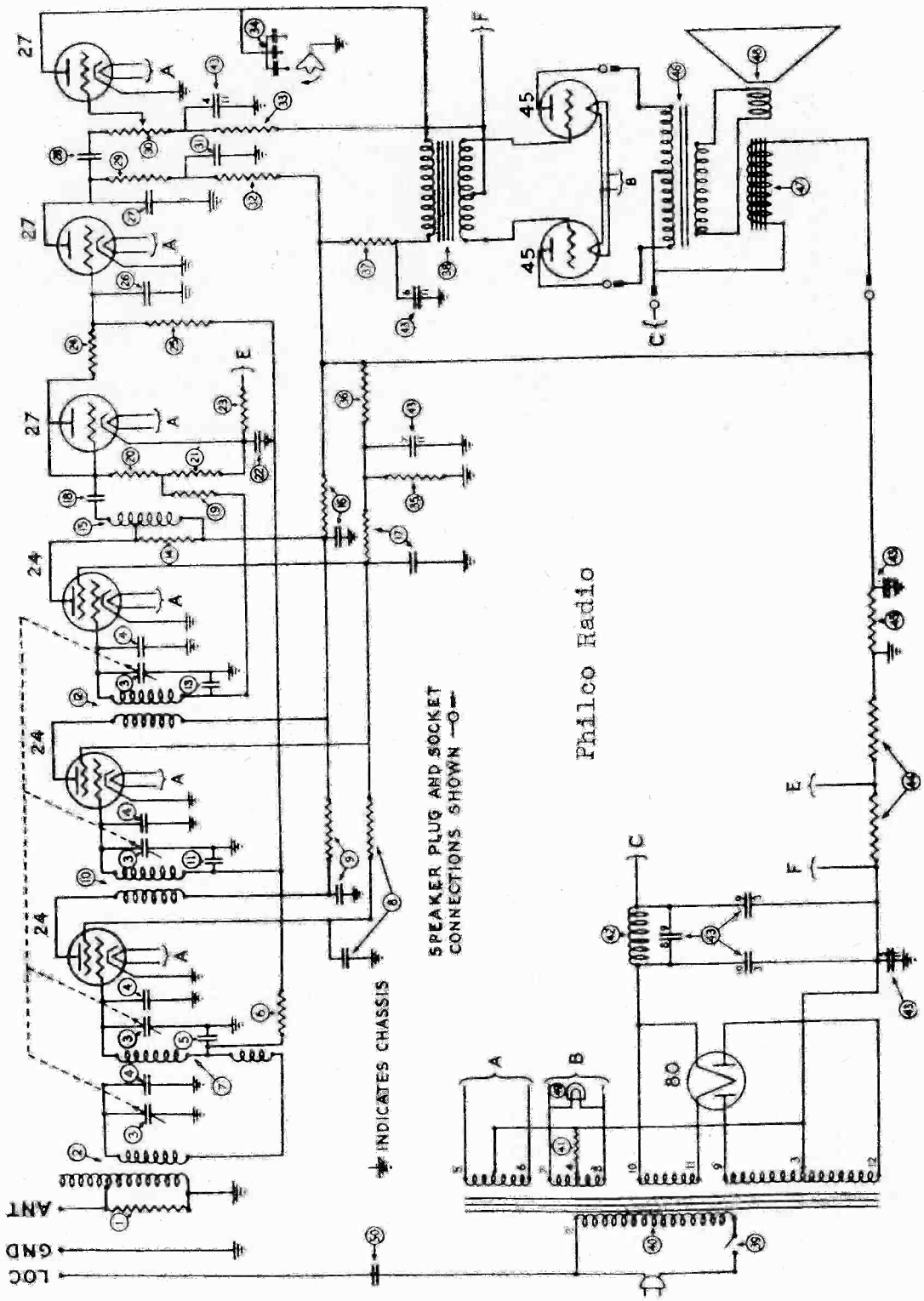
Philco Radio
SPEAKER PLUG AND SOCKET CONNECTIONS SHOWN
INDICATES CHASSIS
27
27
27
24
24
24
45
45
80
ANT
GND
LOC

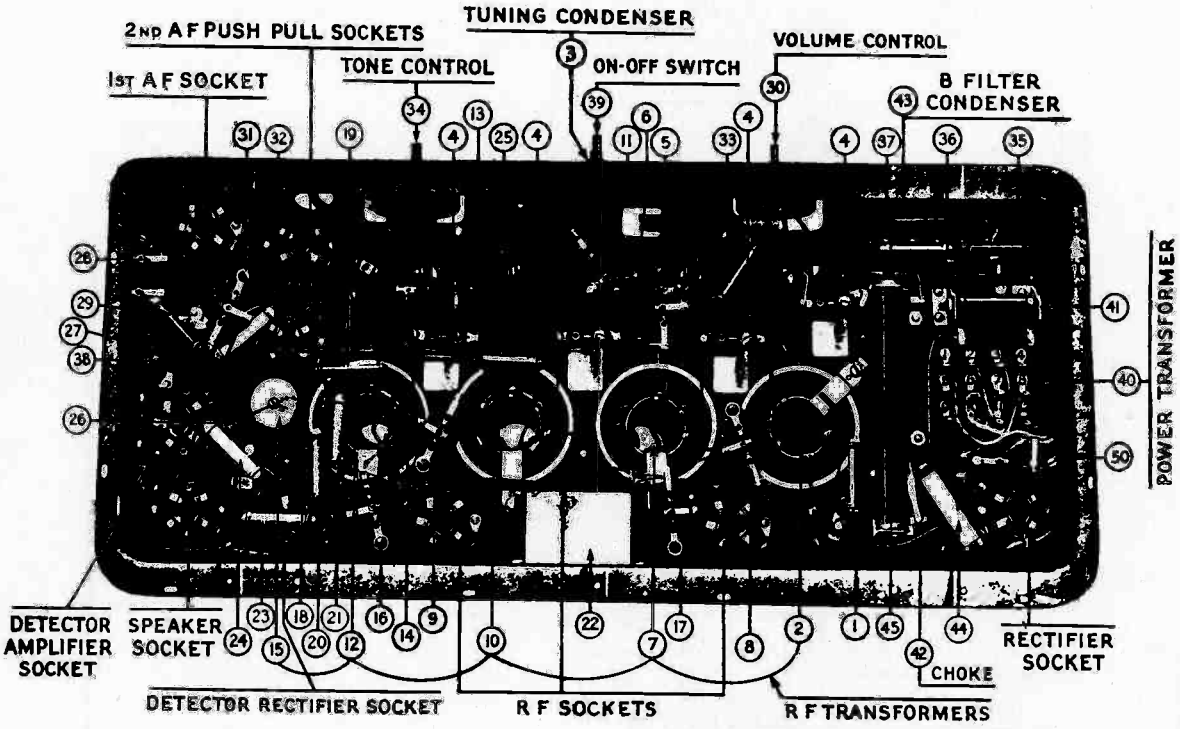

Replacement Parts for Model 96

No.	Description	Part No.
1	Antenna Resistor	3526
2	First R. F. Transformer	3744-A
3	Tuning Condenser	4000-D
4	Compensating Condenser	3772-A
5	By-Pass Condenser	3615-F
6	Resistor	3542
7	Second R. F. Transformer	3744-B
8	By-Pass Condenser and Resistor	3615-C
9	By-Pass Condenser and Resistor	3615-B
10	Third R. F. Transformer	3744-C
11	By-Pass Condenser	3615-E
12	Fourth R. F. Transformer	3744-C
13	By-Pass Condenser	3615-E
14	Resistor	3766
15	Fifth R. F. Transformer	3775-B
16	By-Pass Condenser and Resistor	3615-B
17	By-Pass Condenser and Resistor	3615-C
18	Condenser	3774
19	Resistor	3769
20	Resistor	3767
21	Resistor	3767
22	By-Pass Condenser	3583
23	Resistor	3767
24	Resistor	3768
25	Resistor	3769
26	By-Pass Condenser	3082
27	By-Pass Condenser	3082
28	Condenser	3793-C
29	Resistor	3769

No.	Description	Part No.
30	Volume Control	4093
31	By-Pass Condenser	3615-D
32	Resistor	3768
33	Resistor	3542
34	Tone Control	4037-A
35	Resistor	3542
36	Resistor	3766
37	Resistor	3656
38	Input Transformer	3537
39	On-Off Switch	4095
40	Power Transformer (60 Cycle)	3752
40	Power Transformer (25 Cycle)	3753
41	C Resistor	3763
42	Choke	3422
43	Filter Condenser (60 Cycle)	3754
43	Filter Condenser (25 Cycle)	3755
44	Resistor	3764
45	B Resistor	3762
46	Out-Put Transformer	2848
47	Field Coil	2850
48	Voice Coil and Cone	2794-B
49	Pilot Lamp	3463
50	Condenser (LOC)	3793-B
	Knob (Vol. Control)	3579
	Knob (Tuning Condenser)	3580
	Dial Indicator	4006
	Scale	4118
	Speaker Plug and Cable (Short)	L-1101-A
	Speaker Plug and Cable (Long)	L-1102-A

NOTE: The first two Compensating Condensers ④ are 3772-A; the third and fourth Condensers are 3968-A.

MODEL 118

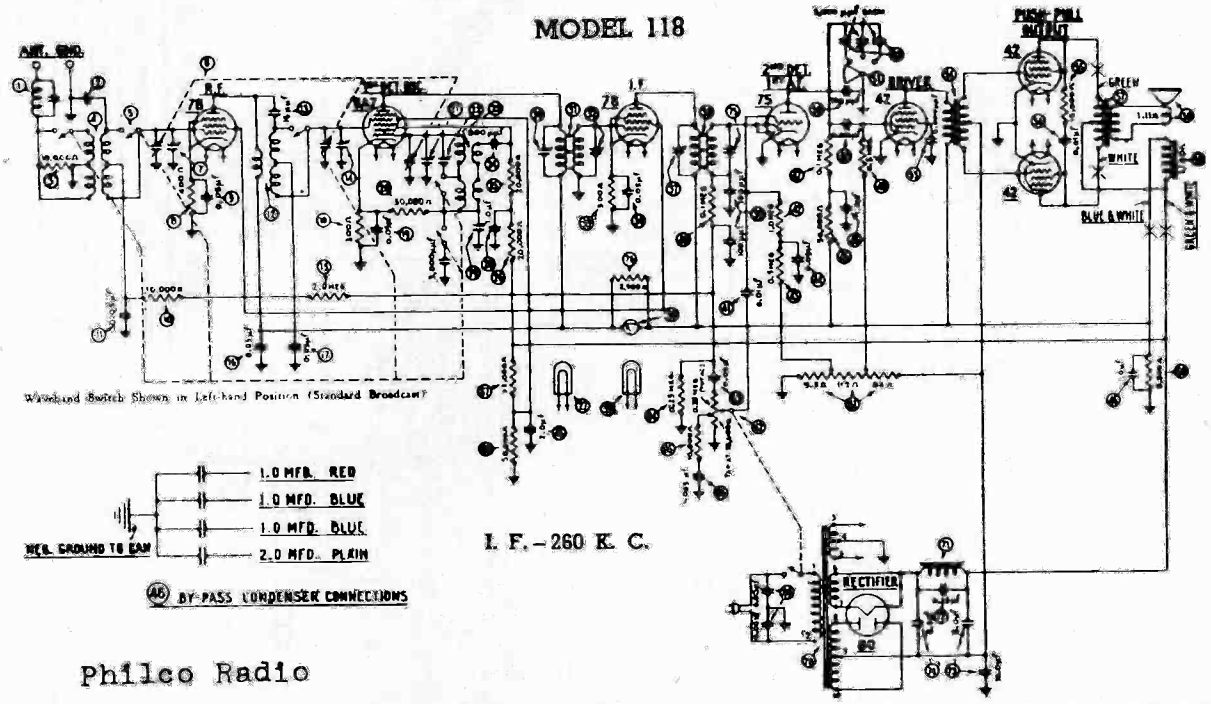

Philco Radio

MODEL 610

(Later Production)

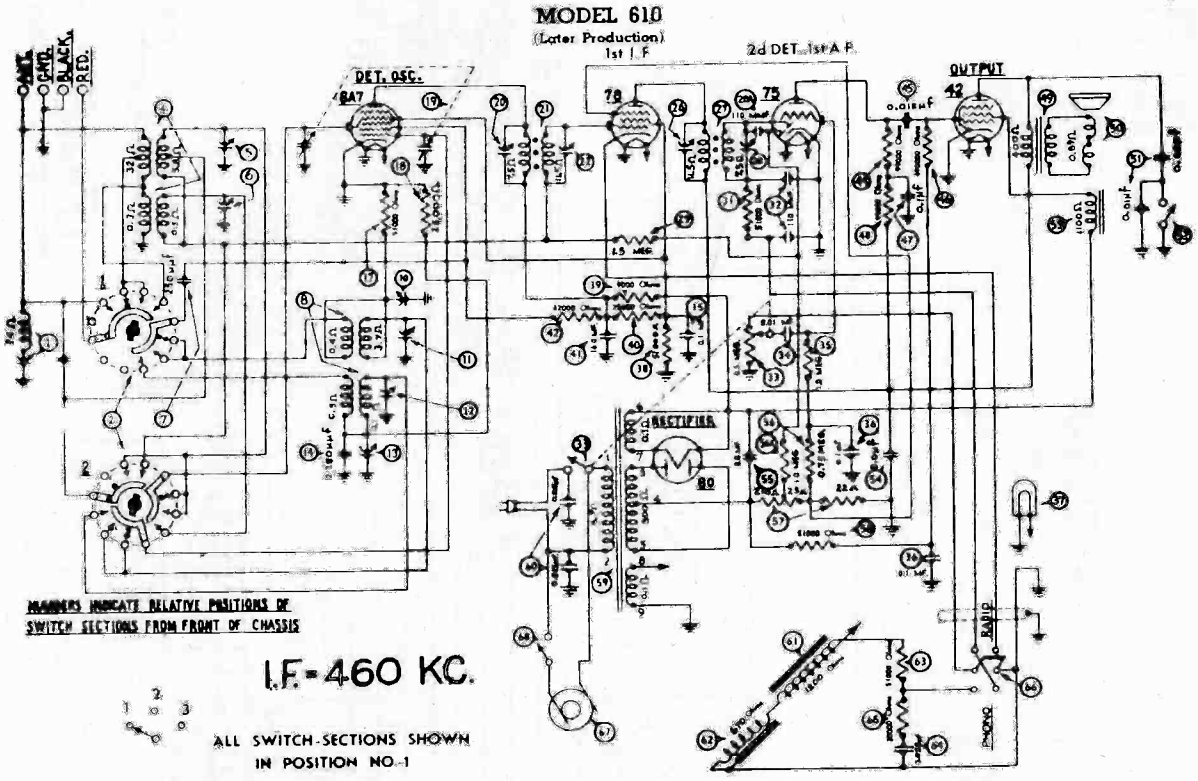

Philco Radio

MODEL 620

(Later Production)

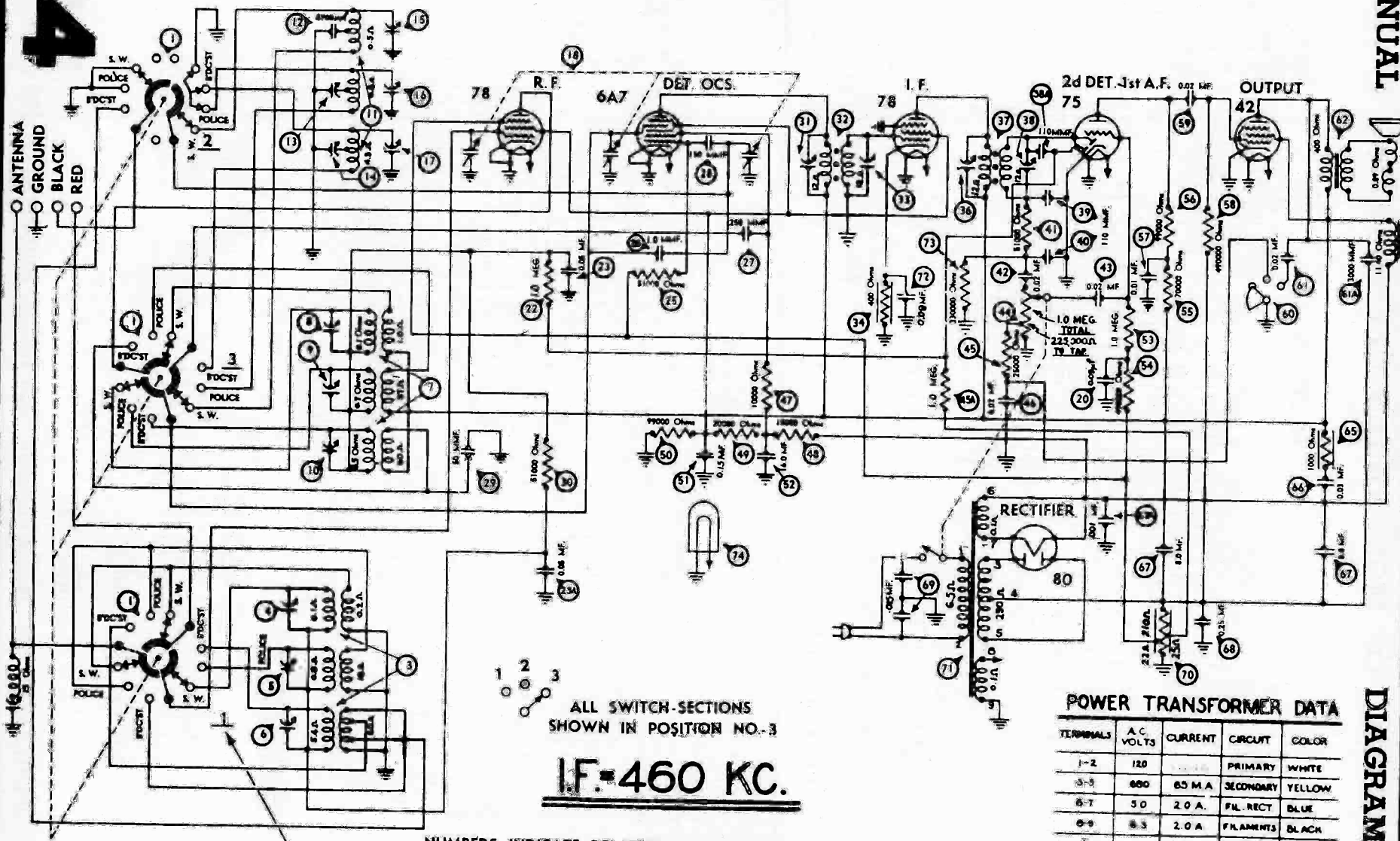

POWER TRANSFORMER DATA

TERMINALS	A.C. VOLTS	CURRENT	CIRCUIT	COLOR
1-2	120		PRIMARY	WHITE
3-5	680	65 M.A.	SECONDARY	YELLOW
6-7	5.0	2.0 A.	FIL. RECT	BLUE
8-9	6.3	2.0 A.	FILAMENTS	BLACK
4			CENTER TAP OF 3-5	YELLOW, GREEN TRACER

MODEL 623
(Battery Operated)

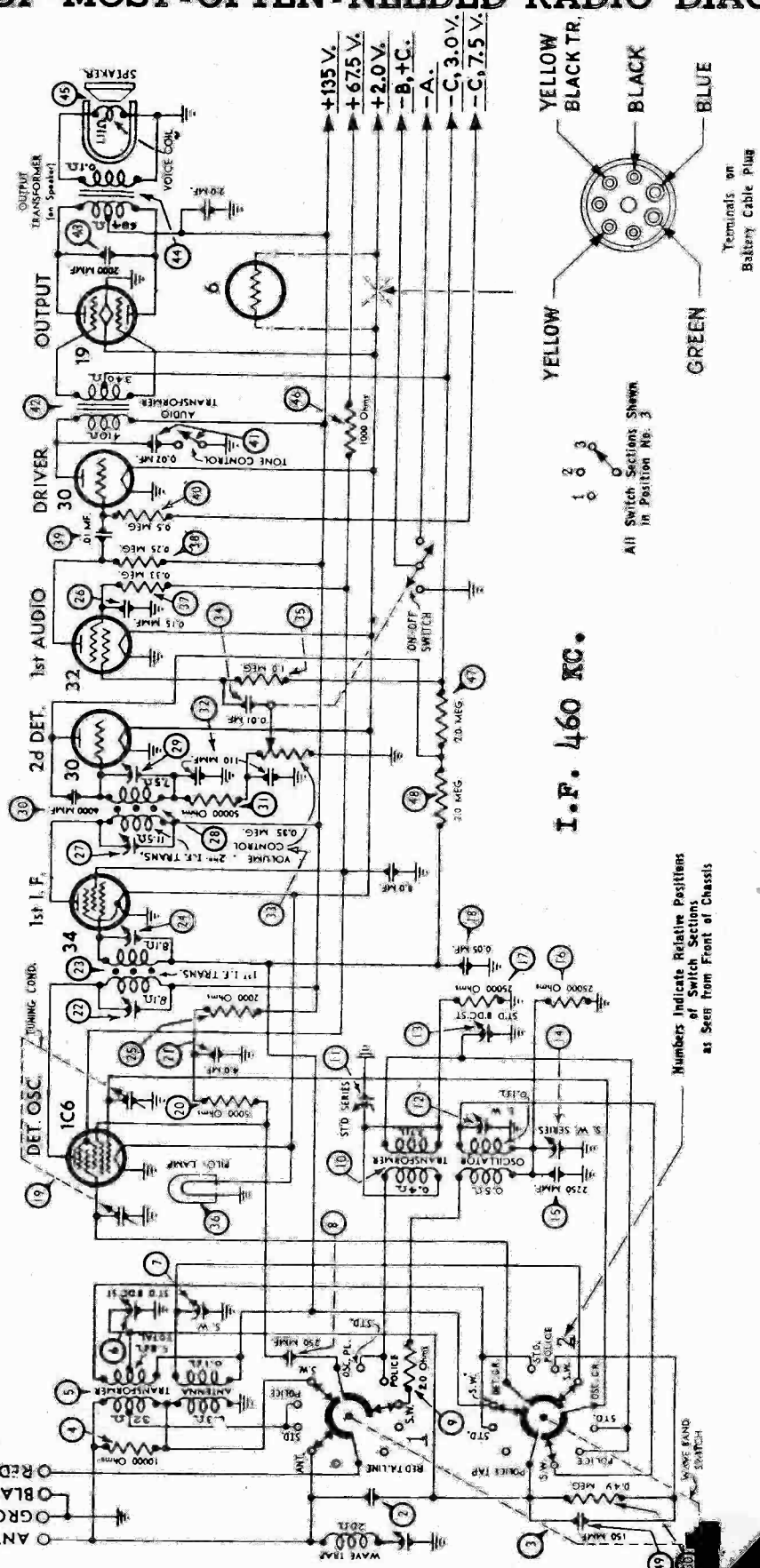

Philco Radio

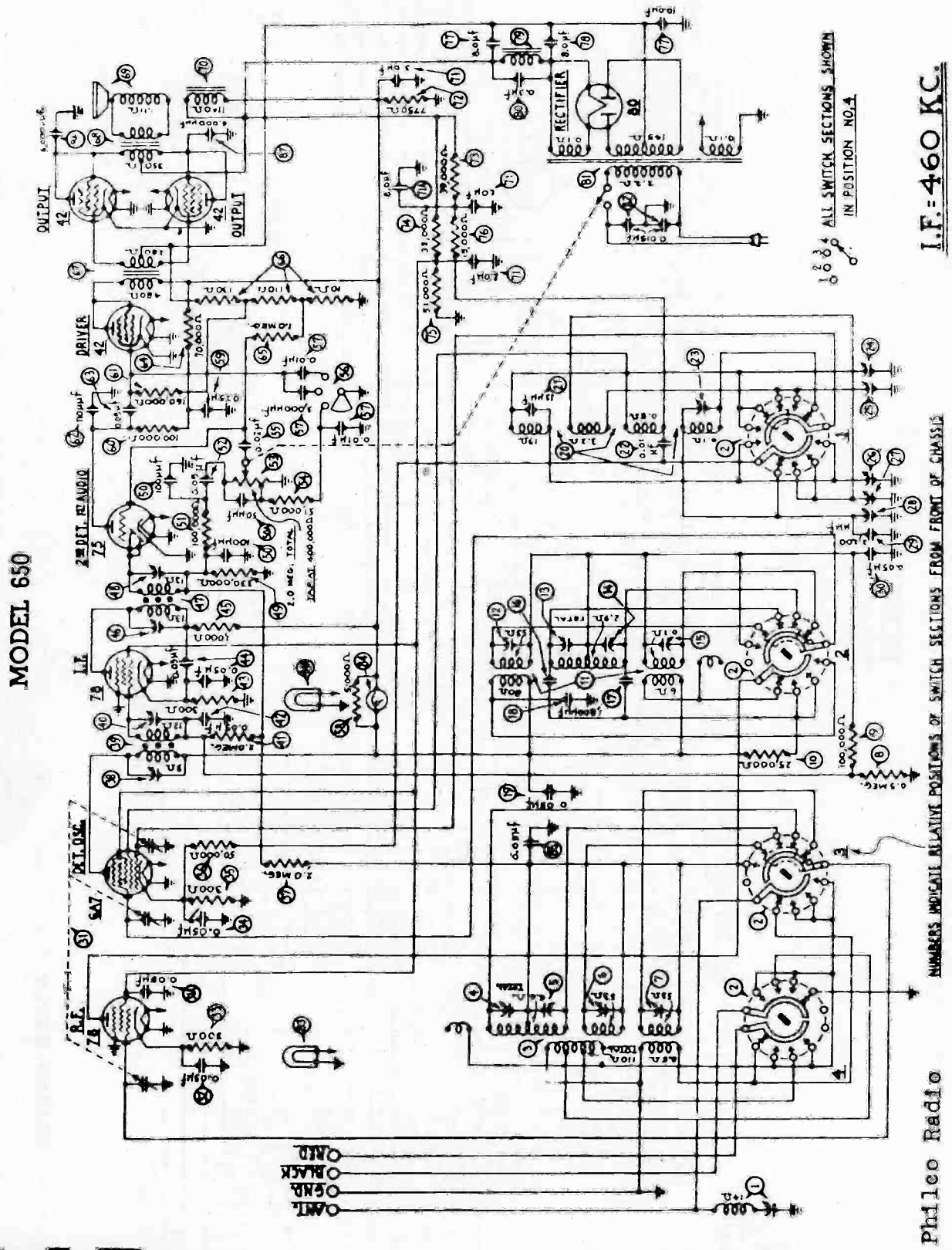

Philco Radio

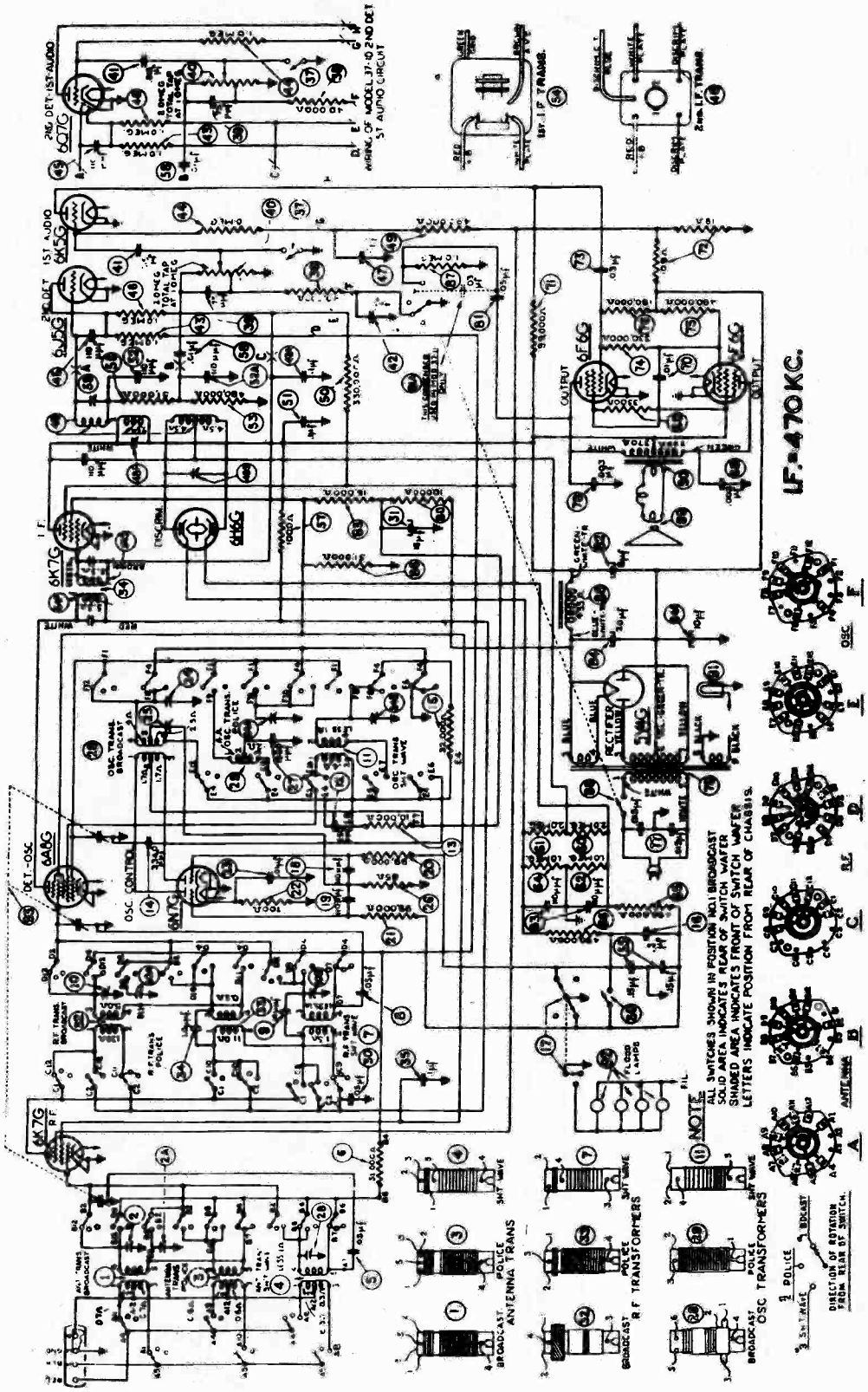
Philco Radio
Models 37-10, 37-11
IF=470KC.
NOTE
ALL SWITCHES SHOWN IN POSITION NO.1 BROADCAST
SOLID AREA INDICATES REAR OF SWITCH WAFER
SHADED AREA INDICATES FRONT OF SWITCH WAFER
LETTERS INDICATE POSITION FROM REAR OF CHASSIS.
DIRECTION OF ROTATION FROM REAR OF SWITCH.
BROADCAST ANTENNA TRANS
POLICE ANTENNA TRANS
BROADCAST R F TRANSFORMERS
POLICE R F TRANSFORMERS
BROADCAST OSC TRANSFORMERS
POLICE OSC TRANSFORMERS
SHORT WAVE
ANTENNA
R F
OSC
6A8G
6K7G
6B7G
6J5G
6K5G
6F6G
5Y3G
OUTPUT
RECTIFIER
FILTER

PHILCO *Model 37-33*

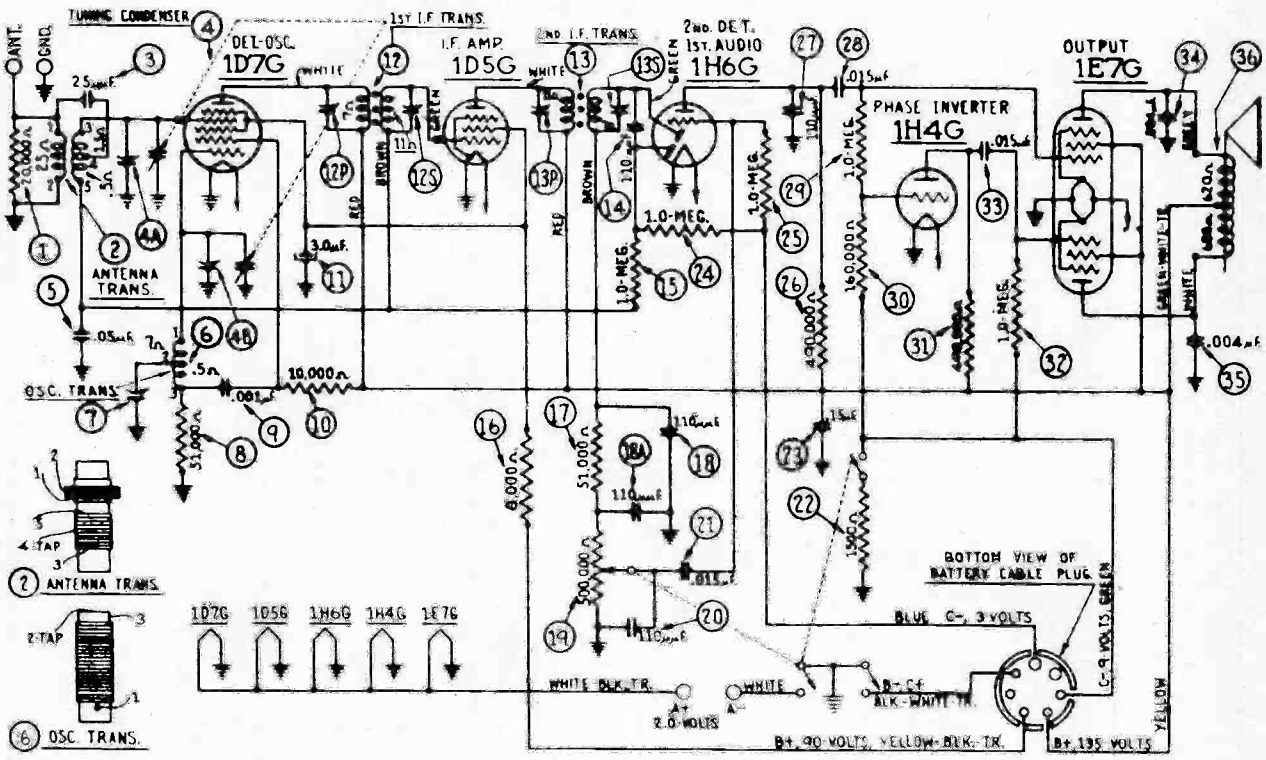

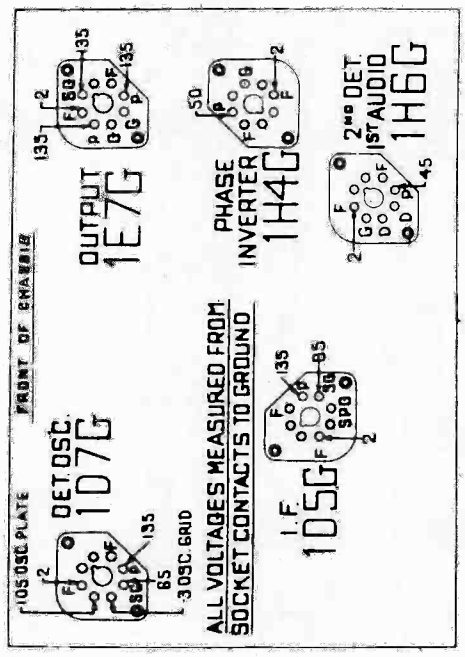

View of Sockets from Underside Chassis

The voltages indicated by arrows were measured with a Philco 25 Circuit Tester which contains a voltmeter having a resistance of 1000 ohms per volt. Volume Control at minimum.

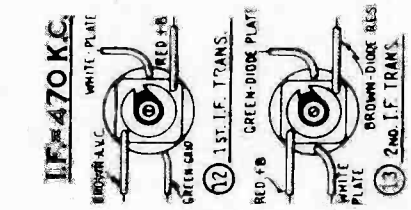

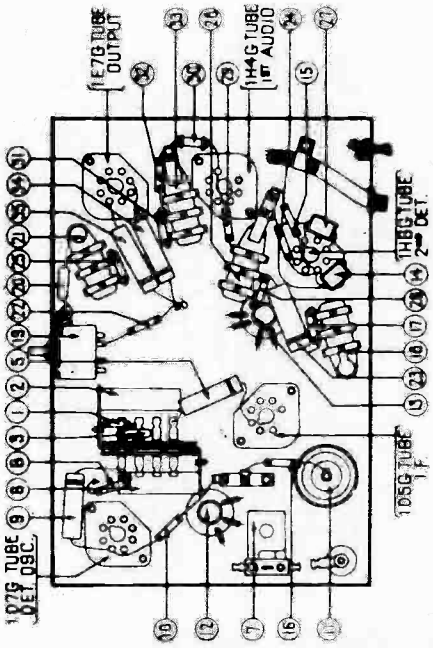

COMPILED BY M. N. BEITMAN, SUPREME PUBLICATIONS

PHILCO *Model 37-38*

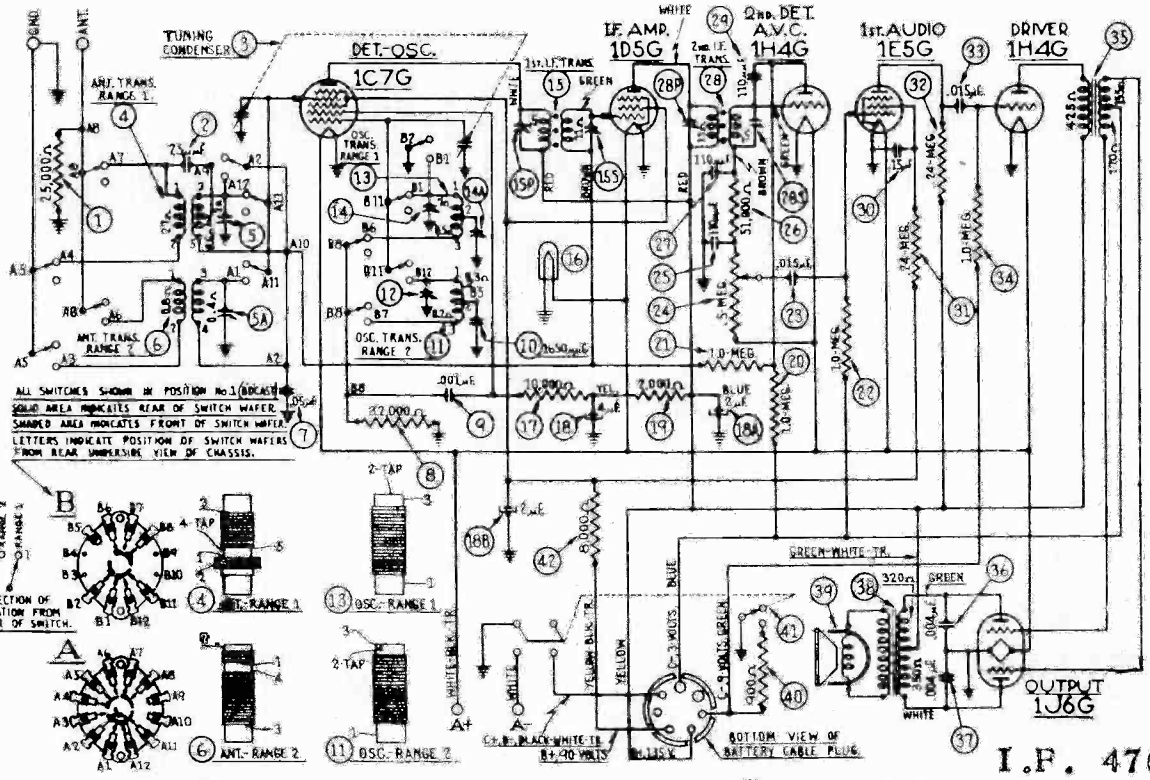

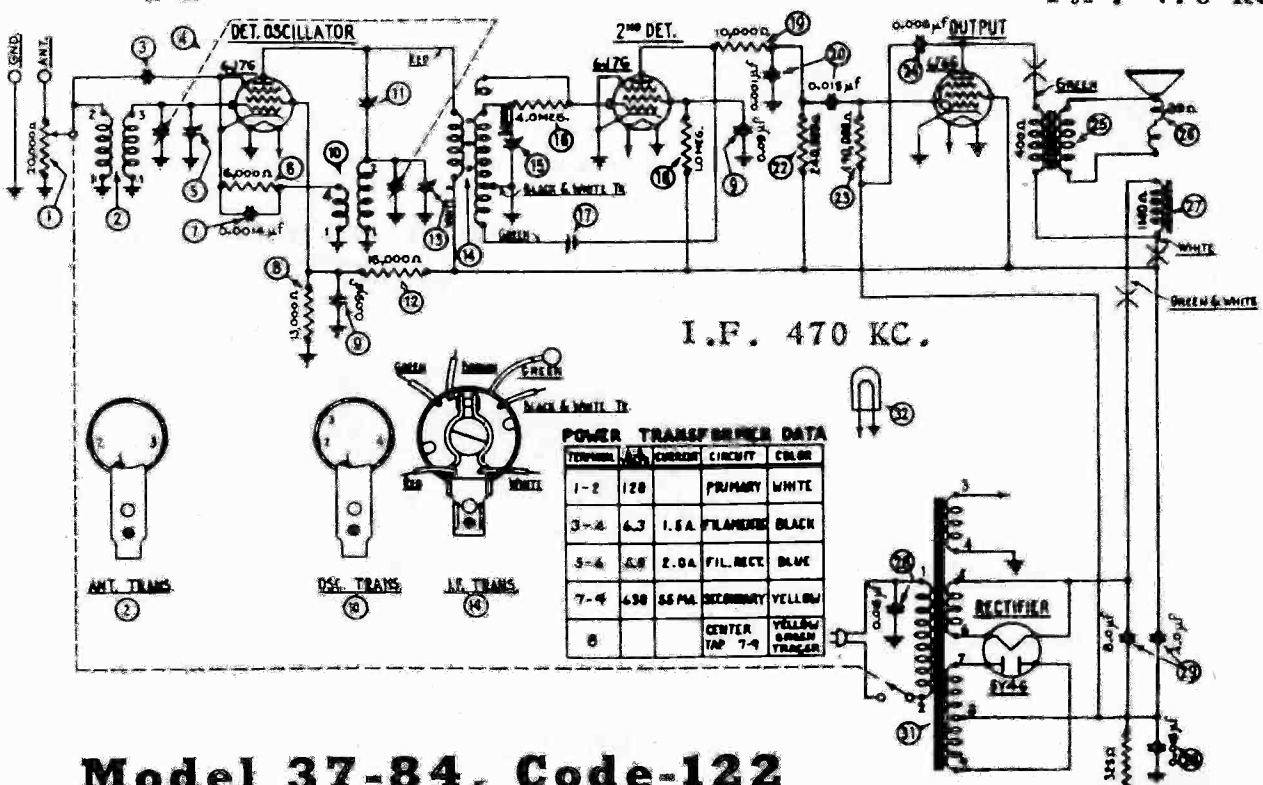

Model 37-84, Code-122

Philco Model 37-93

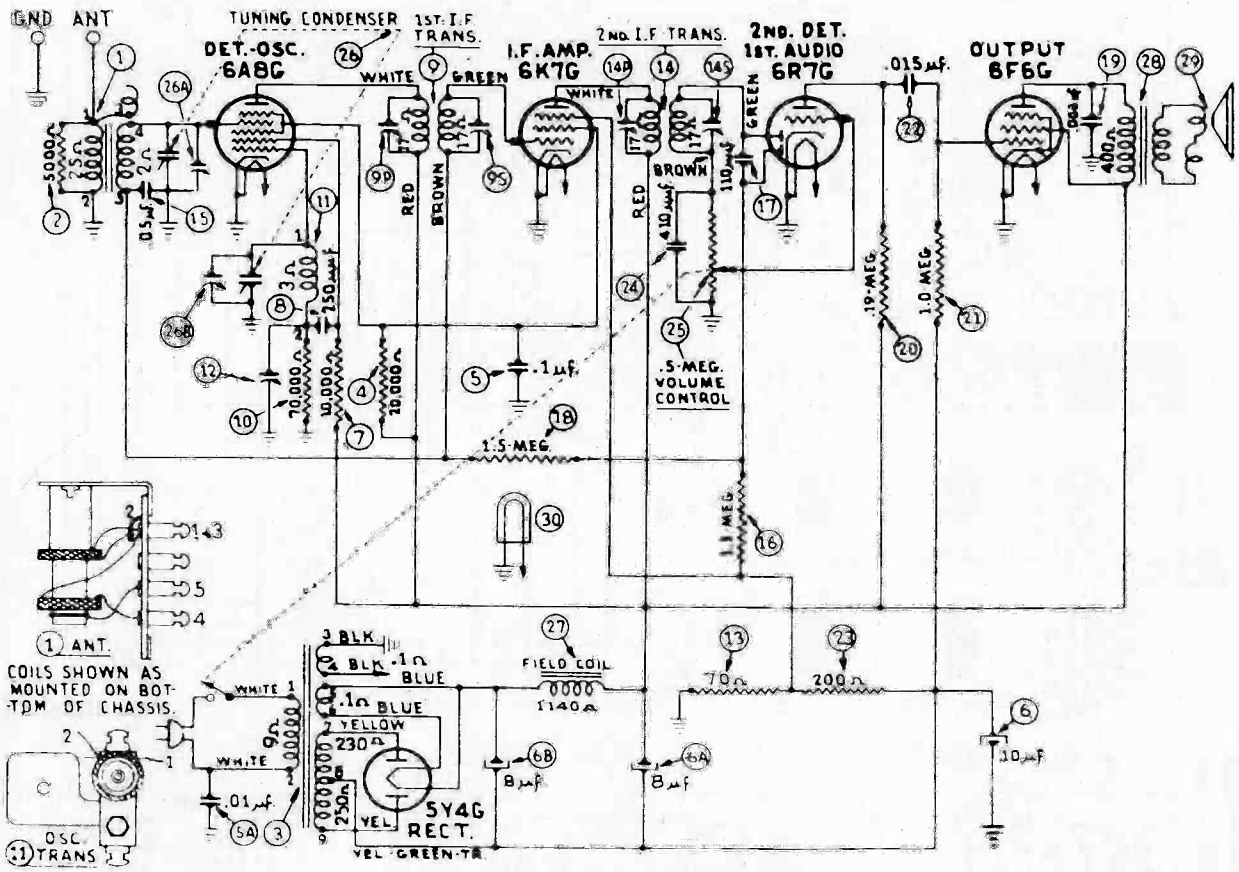

Schematic Diagram, Model 37-93

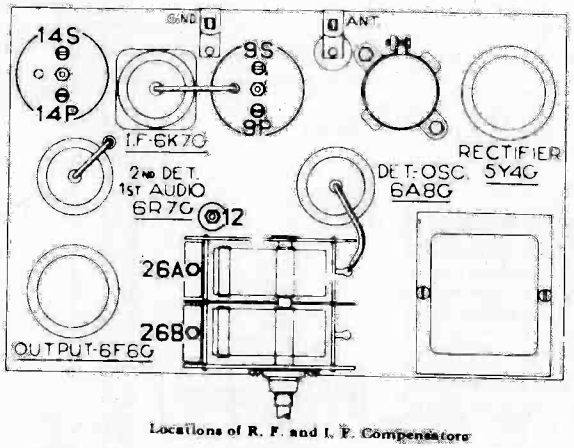

Locations of R. F. and I. F. Compensators

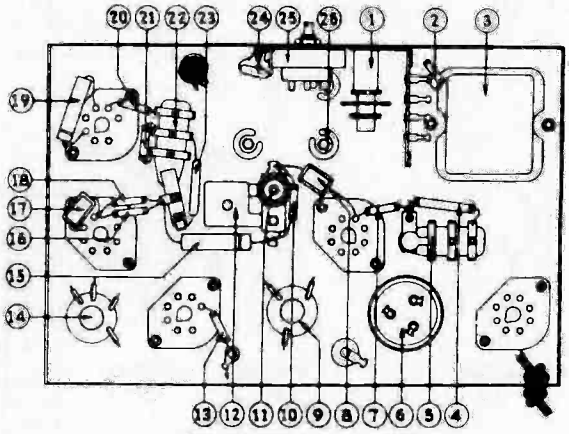

Part Locations, underside of Chassis

I.F. 470 KC.

PHILCO *Model 37-602*

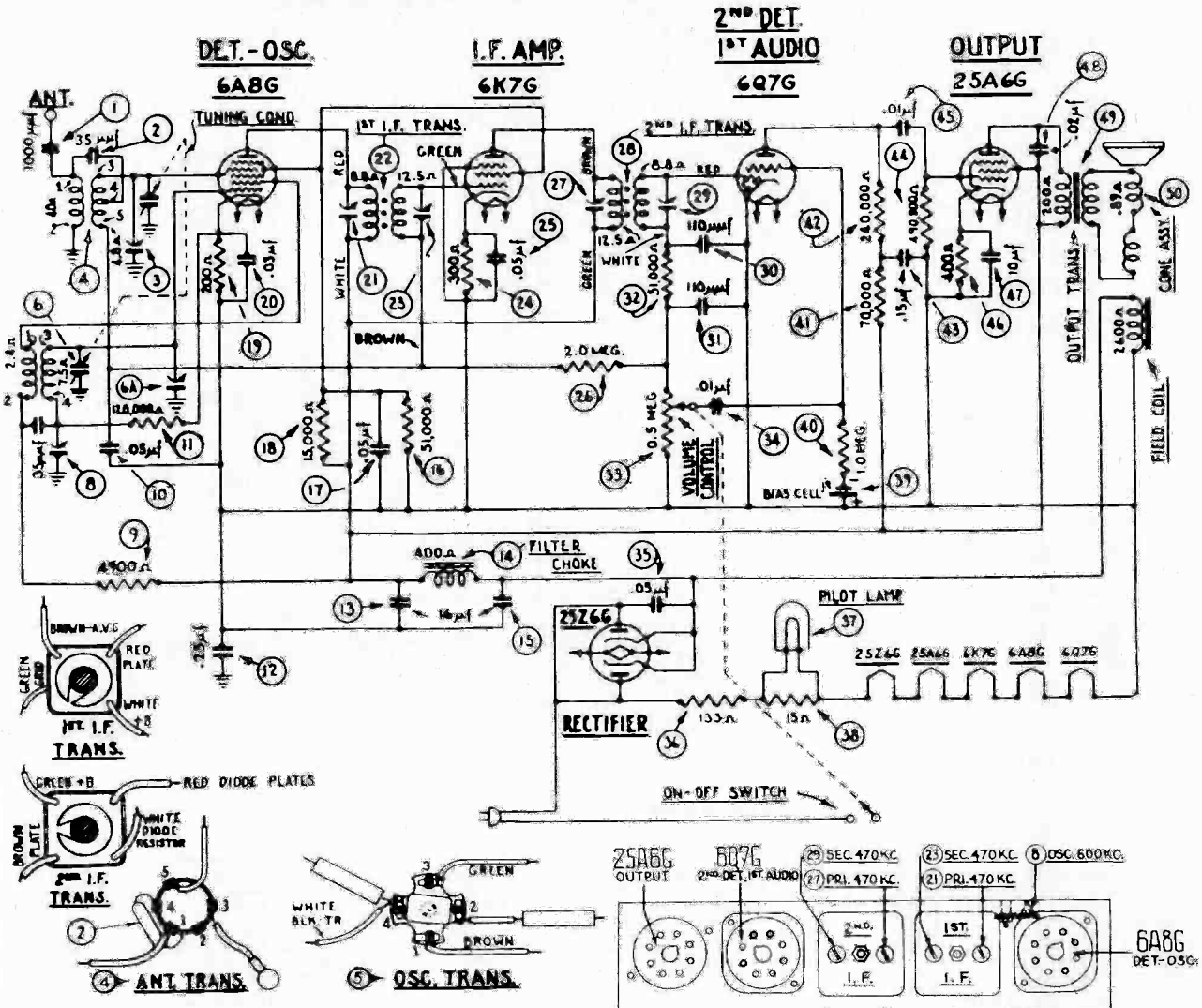

Tube Sockets as viewed from underside of chassis. (Voltages measured from socket contacts to B—)

TYPE CIRCUIT: Superheterodyne with pentode output.
POWER SUPPLY: 115 V., 25 or 60 cycle, A. C.; D. C.
TUBES USED: 1 type 6A8G, Osc. Det., 1 type 6K7G I.F. Amplifier, 1 type 6Q7G, 2nd Det. 1st audio, 1 type 25A6G output, 1 type 25Z6G rectifier.
FREQUENCY RANGE: 530--1800 K.C.
INTERMEDIATE FREQUENCY: 470 K.C.
CURRENT CONSUMPTION: 55 watts.
SPEAKER: B-4.
POWER OUTPUT: ¾ watt.

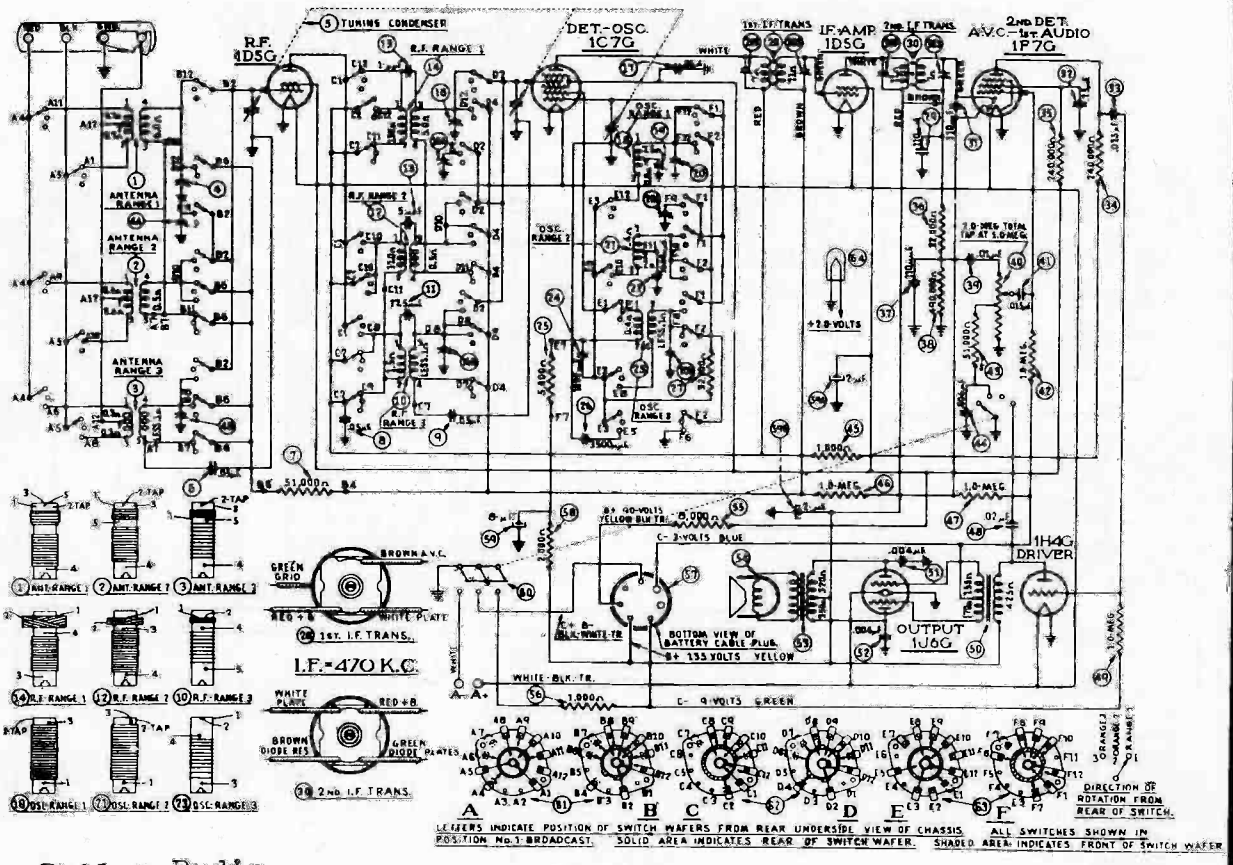

Philco Radio

Schematic Diagram

Replacement Parts — Model 37-623

Schem. No.	Description	Part No.
1	Antenna Transformer (530-1720 K.C.)	32-2108
2	Antenna Transformer (2.3 to 7.4 M.C.)	32-2119
3	Antenna Transformer (7.35 to 22 M.C.)	32-2109
4	Compensator (Three Sections)	31-6092
5	Tuning Condenser	31-1818
6	Condenser (.05 mfd. Tubular)	30-4020
7	Resistor (51,00 ohms, ½ watt)	33-351339
8	Condenser (.05 mfd. Tubular)	30-4020
9	Condenser (.05 mfd. Tubular)	30-4020
10	R. F. Transformer (7.35 to 22 M.C.)	32-2126
11	Condenser (17.5 mmfd. Mica)	30-1079
12	R. F. Transformer (2.3 to 7.4 M.C.)	32-2106
13	Condenser (5 mmfd. Mica)	30-1080
14	R. F. Transformer (530-1720 K.C.)	32-2105
15	Condenser (Twist wire and lug)	38-7878
16	Compensator (Three section)	31-1621
17	Condenser (.05 mfd. Tubular)	30-4020
18	Oscillator Transformer (530-1720 K.C.)	32-2120
19	Compensator (580 K.C.)	31-6086
20	Compensator (Three section)	31-6092
21	Oscillator Transformer (2.3 to 7.4 M.C.)	32-2121
22	Condenser (1650 mmfd.)	31-6096
23	Oscillator Transformer (7.35 to 22 M.C.)	32-2110
24	Condenser (1,000 mmfd. Mica)	30-4453
25	Resistor (5,000 ohms, ½ watt)	33-250393
26	Condenser (3,500 mmfd. Semifixed)	31-6097
27	Resistor (32,000 ohms, ½ watt)	33-332339
28	First I. F. Transformer	32-2100
29	Condenser (110 mmfd. Mica)	30-1031
30	Second I. F. Transformer	32-2102
31	Condenser (110 mmfd. Mica)	30-1041
32	Condenser (.15 mfd. Bakelite)	6287SG
33	Condenser (.015 mfd. Tubular)	30-4226
34	Resistor (240,000 ohms, ½ watt)	33-424339
35	Resistor (240,000 ohms, ½ watt)	33-424339
36	Resistor (32,000 ohms, ½ watt)	33-332339
37	Condenser (110 mmfd. Mica)	30-1031
38	Resistor (490,000 ohms, ½ watt)	33-449339
39	Condenser (.01 mfd. Tubular)	30-4124
40	Volume Control	33-5158
41	Condenser (.015 mfd. Tubular)	30-4358
42	Resistor (1 megohm, ½ watt)	33-510339
43	Resistor (51,000 ohms, ½ watt)	33-351339
44	Condenser (.006 mfd. Tubular)	30-4125
45	Resistor (1,000 ohms, ½ watt)	33-210339
46	Resistor (1 megohm, ½ watt)	33-510339
47	Resistor (1 megohm, ½ watt)	33-510339
48	Condenser (.02 mfd. Tubular)	30-4113
49	Resistor (1 megohm, ½ watt)	33-510339
50	Audio Input Transformer	32-7637
51	Condenser (.004 mfd. Tubular)	30-4456
52	Condenser (.004 mfd. Tubular)	30-4456
53	Output Transformer	32-7638
54	Cone and Voice Coil Assembly KR-17	36-3540
	Cone and Voice Coil Assembly HR-12	36-3557
55	Resistor (8,000 ohm, ½ watt)	33-280339
56	Resistor (1,000 ohms, ½ watt)	33-210339
57	Cable Battery	41-3198
58	Resistor (2,000 ohms, ½ watt)	33-220339
59	Electrolytic Condenser (2, 2, 8 mfd.)	30-2161
60	Power and Tone Control Switch	42-1207
61	Range Switch (ANT)	42-1200
62	Range Switch (R.F.)	42-1245
63	Range Switch (Osc.)	42-1246
	Pilot Lamp Assembly	38-7875
	Pilot Lamp	34-2150
	Vernier Drive Assembly	31-1871
	Dial	27-5214
	Dial Hub	28-7187
	Dial Clamp	28-2837
	Dial Guard	27-8324
	Set Screw	W-1641
	Gear (Dial)	28-7185
	Thrust Spring	28-8611
	Thrust Washer	28-3976
	C Washer	28-3904
	Gear (Drive)	31-1854
	Mask	27-5108
	Mask Arm and Assembly	31-1940
	Shaft Coupling (Mask)	31-1941
	Felt Washers	27-8399
	Washer	27-8318
	Snap Fastener	28-4279
	Indicator Bracket and Lens Assembly	38-7912
	Mask Guide and Lamp Support	38-7844
	Shaft and Index Plate (Range Switch)	42-1173
	Shaft (Volume Control)	38-8059
	Retaining Clip (Vol. Shaft)	28-4394
	Spring (Vol. Shaft)	28-4117
	Socket (8 prong)	27-6058
	Socket (7 prong)	27-6057
	Shield Tube	28-2726
	Base Tube Shield	28-3898
	Grommet Mtg. R. F. Unit	27-4317
	Sleeve Mtg. R. F. Unit	28-2257
	Screw Mtg. R. F. Unit	W-729
	Washer Mtg. R. F. Unit	28-3927
	Washer Mtg. R. F. Unit	27-8339
	Rubber Mtg. Tuning Condenser	27-4325
	Mtg. Plate (Trans.)	28-3808
	Mtg. Spacer (Trans.)	27-8228
	Mtg. Screw (Trans.)	W-1635
	Terminal Panel I. F. Unit	38-7703
	Cable Speaker	41-3207
	Mtg. Bolt (Chassis)	W-1495
	Mtg. Rubbers	5189
	Mtg. Bushing	27-4360
	Knob	27-4330
	Knob	27-4331
	Knob	27-4326
	Knob	27-4332
	"B" Battery	41-8007
	"A" Battery (Wet)	172R
	"A" Battery (Dry)	41-8011
	Ballast Lamp	1FI
	Bezel Plate and Frame	40-5939
	Gasket	27-8311
	Glass	27-8298
	Ring	28-3967
	Screws	W-1644
	B CABINET	
	Baffle and Silk Assembly	40-5970
	Speaker—KR17	36-1248
	J CABINET	
	Speaker—HR12	36-1250
	Baffle and Silk Assembly	40-5971
	Speaker	36-1250
	Speaker Ring	27-8016
	Speaker Bolts	W-1693

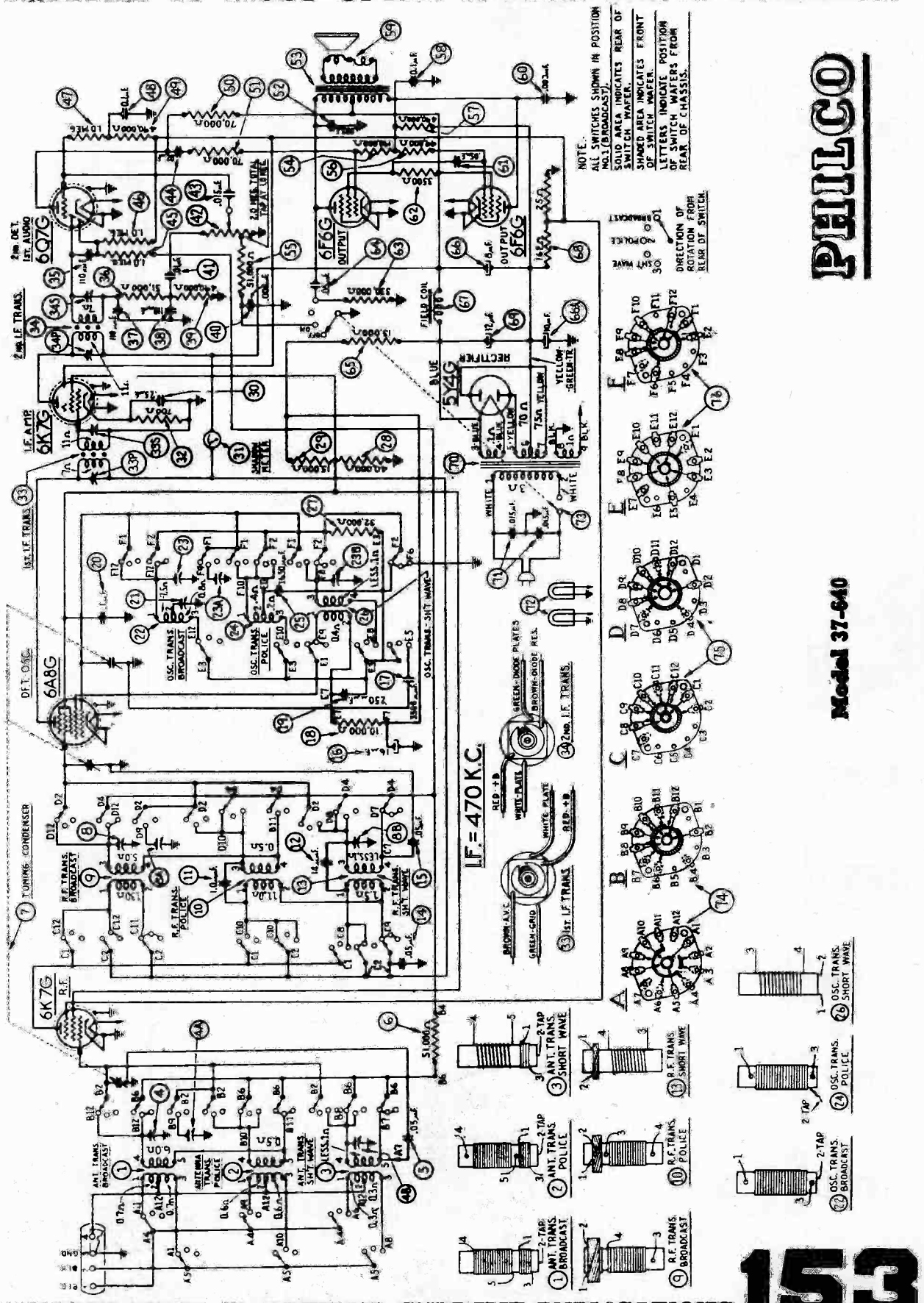
PHILCO
Model 37-640
I.F. = 470 K.C.
NOTE:- ALL SWITCHES SHOWN IN POSITION NO. 1 (BROADCAST).
SOLID AREA INDICATES REAR OF SWITCH WAFER.
SHADED AREA INDICATES FRONT OF SWITCH WAFER.
LETTERS INDICATE POSITION OF SWITCH WAFERS FROM REAR OF CHASSIS.
DIRECTION OF ROTATION FROM REAR OF SWITCH.
6Q7G
6K7G
6A8G
6F6G
5Y4G
TUNING CONDENSER
DET. OSC.
1st. I.F. TRANS.
2nd. I.F. TRANS.
2nd. DET. 1st. AUDIO
2nd. I.F. TRANS.
I.F. AMP.
RECTIFIER
FIELD COIL
OUTPUT
R.F.
OSC. TRANS. BROADCAST
OSC. TRANS. POLICE
OSC. TRANS. SHT. WAVE
R.F. TRANS. BROADCAST
R.F. TRANS. POLICE
R.F. TRANS. SHT. WAVE
ANT. TRANS. BROADCAST
ANTENNA TRANS. POLICE
ANT. TRANS. SHT. WAVE
GREEN-DIODE PLATES
BROWN-DIODE PLATES
RED-+B
WHITE-PLATE
BROWN-A.V.C.
GREEN-GRID
BLUE
YELLOW
WHITE
BLK.
GREEN-TR.
1 ANT. TRANS. BROADCAST
2 ANT. TRANS. POLICE
3 ANT. TRANS. SHORT WAVE
9 R.F. TRANS. BROADCAST
10 R.F. TRANS. POLICE
13 R.F. TRANS. SHORT WAVE
22 OSC. TRANS. BROADCAST
24 OSC. TRANS. POLICE
26 OSC. TRANS. SHORT WAVE

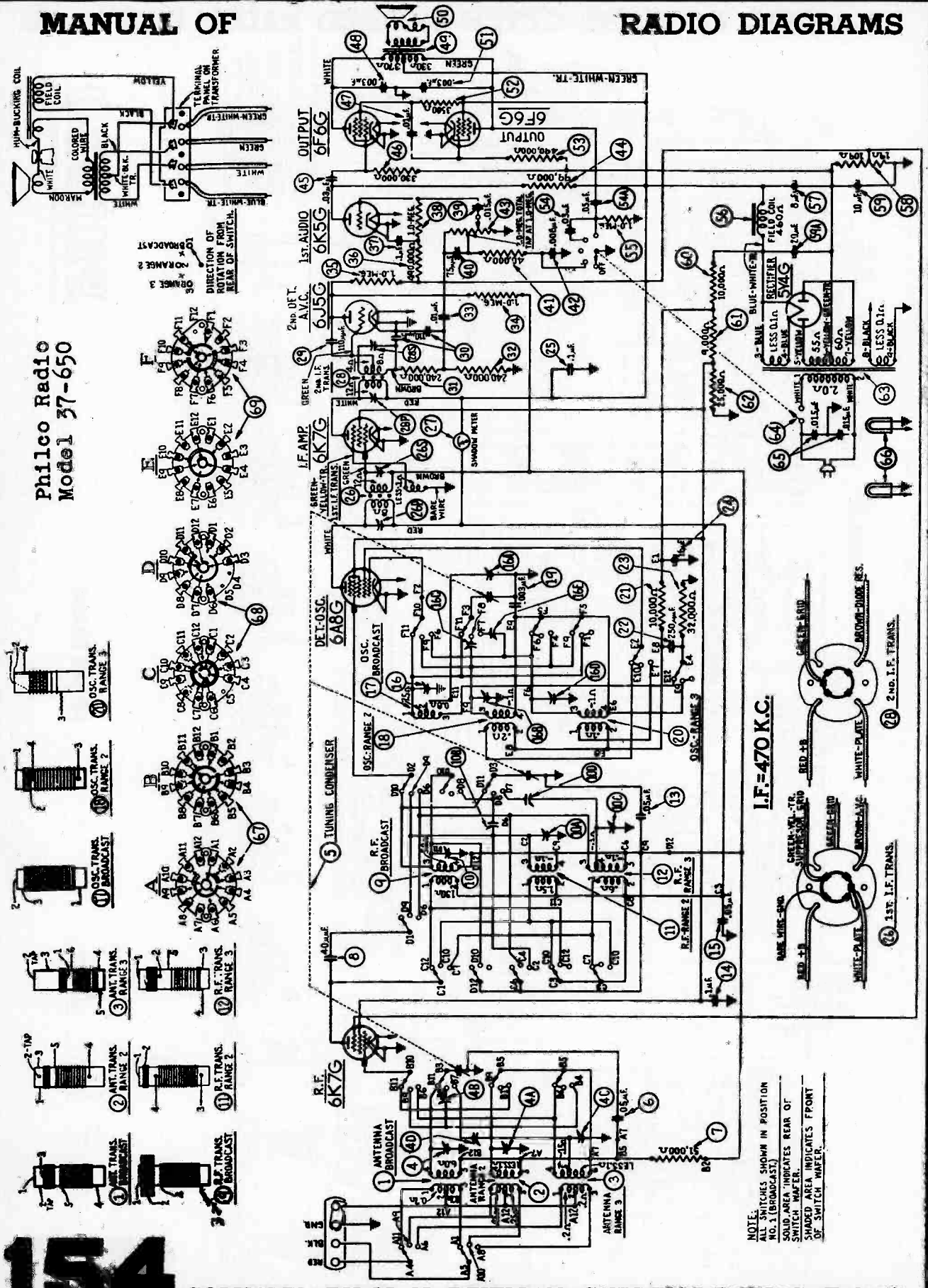
Philco Radio
Model 37-650
OUTPUT 6F6G
1ST. AUDIO 6K5G
2ND. DET. A.V.C. 6J5G
I.F. AMP. 6K7G
DET.-OSC. 6A8G
R.F. 6K7G
RECTIFIER 5Y4G
TUNING CONDENSER
I.F.=470 K.C.
NOTE:
ALL SWITCHES SHOWN IN POSITION NO. 1 (BROADCAST.)
SOLID AREA INDICATES REAR OF SWITCH WAFER.
SHADED AREA INDICATES FRONT OF SWITCH WAFER.

PHILCO . . . . . Model 38-116, Code 121

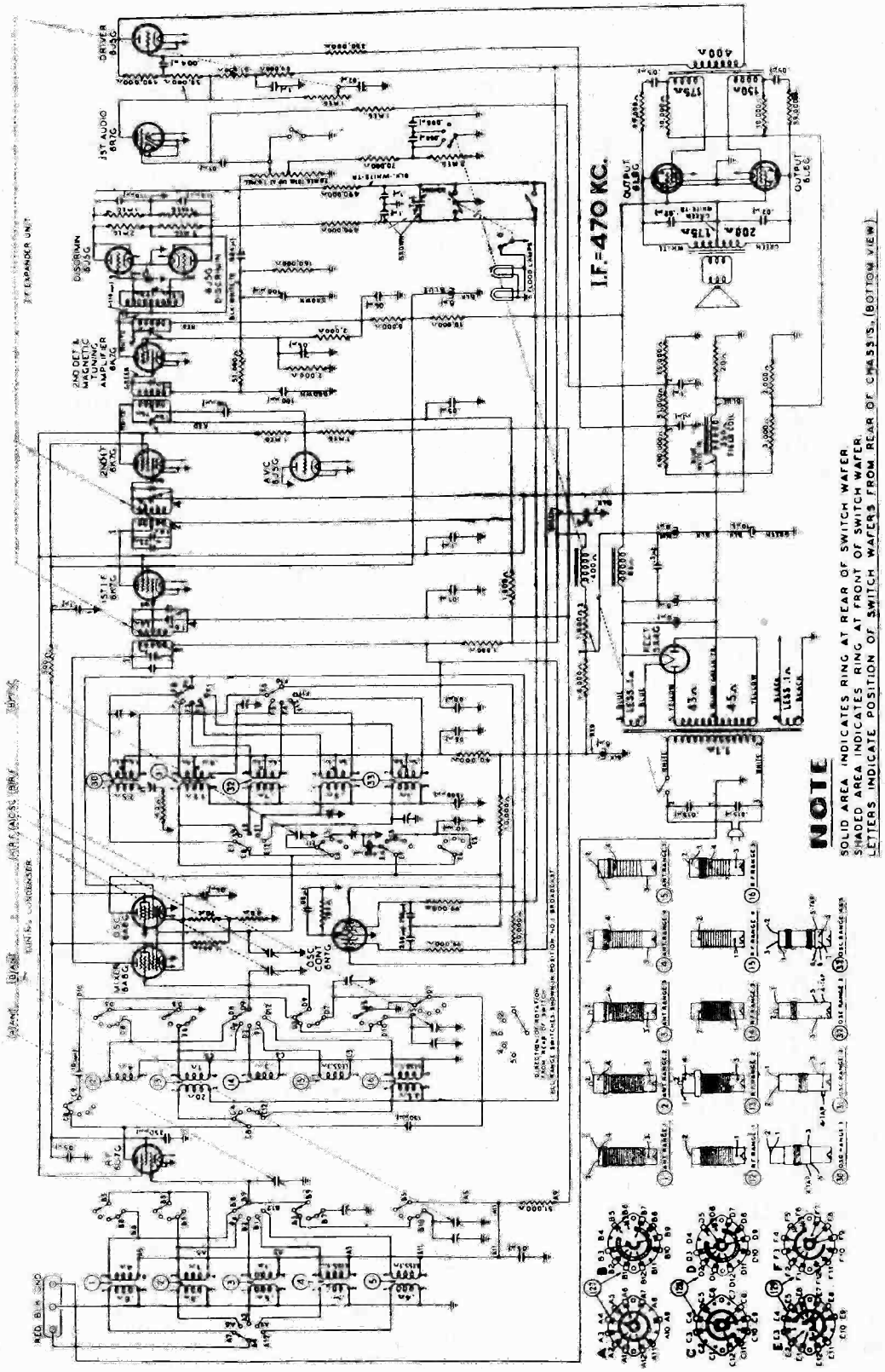

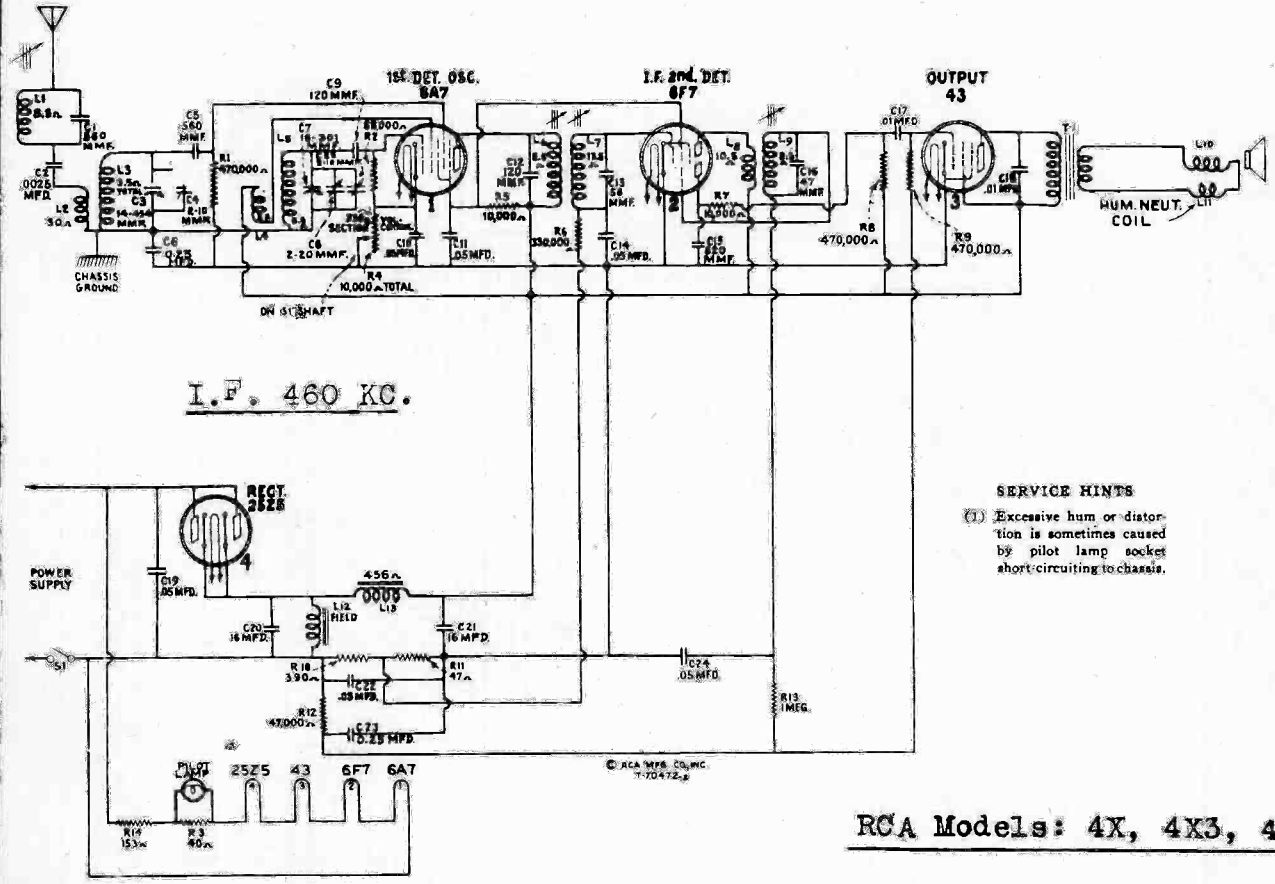

SERVICE HINTS

(1) Excessive hum or distortion is sometimes caused by pilot lamp socket short-circuiting to chassis.

RCA Models: 4X, 4X3, 4X4

Schematic Circuit Diagram

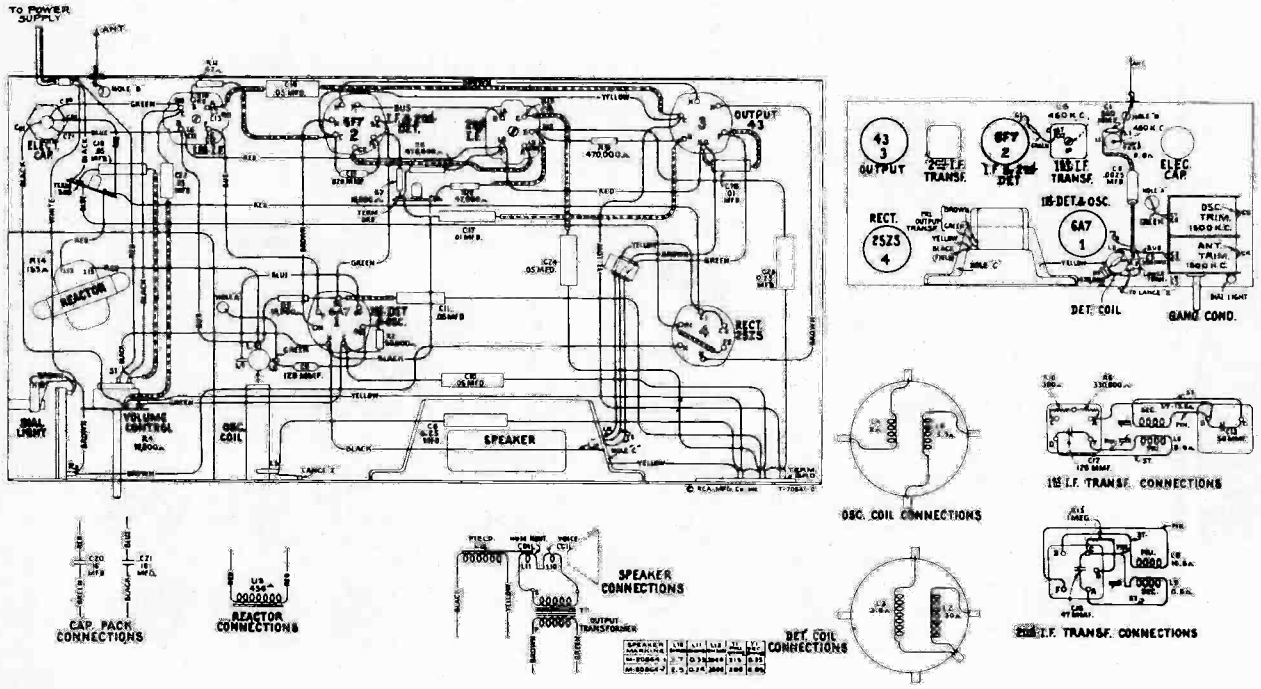

Chassis Wiring Diagram, Radiotron, Coil, and Trimmer Locations

COMPILED BY M. N. BEITMAN, SUPREME PUBLICATIONS

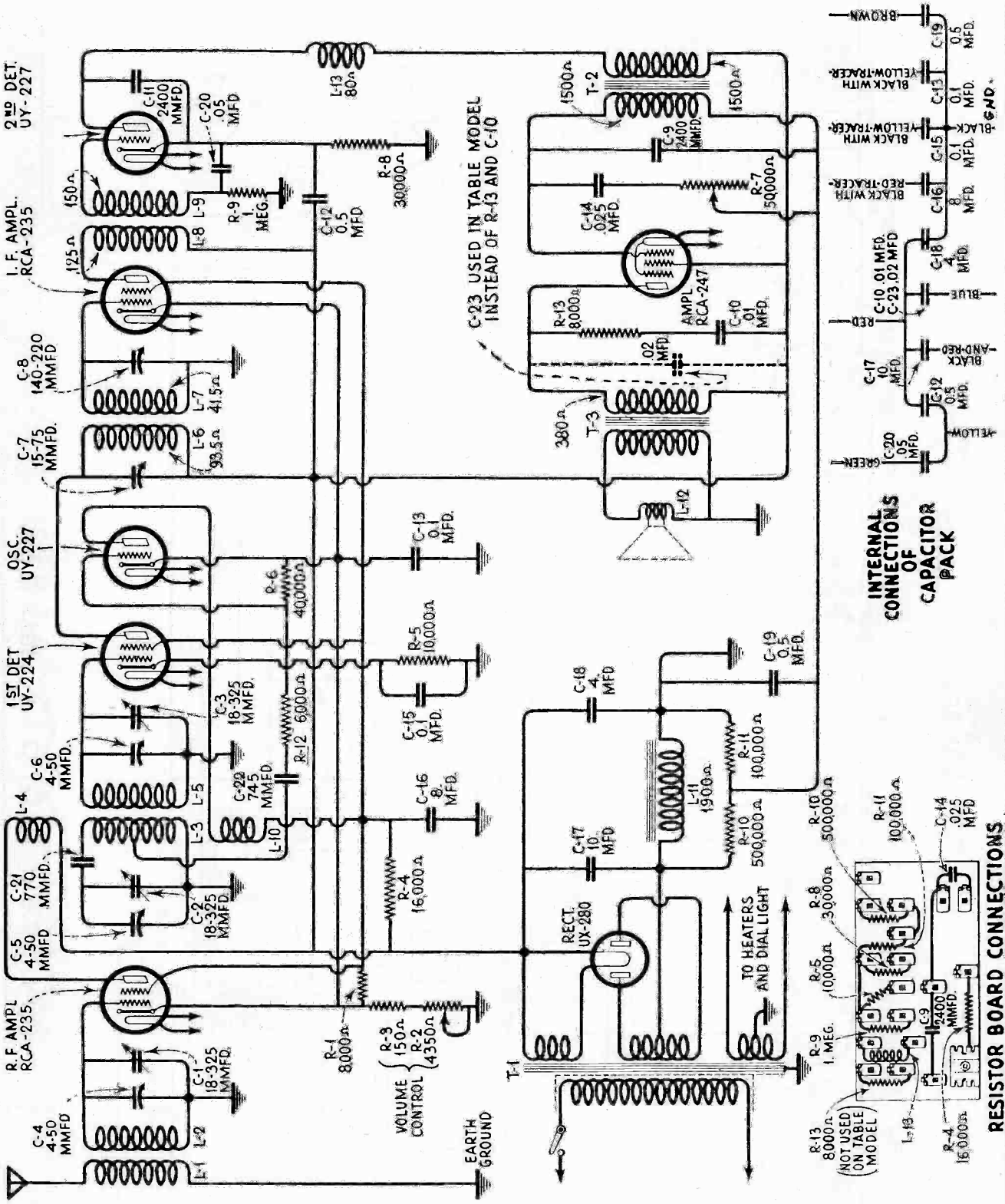

RCA Victor Models R-4 and R-6

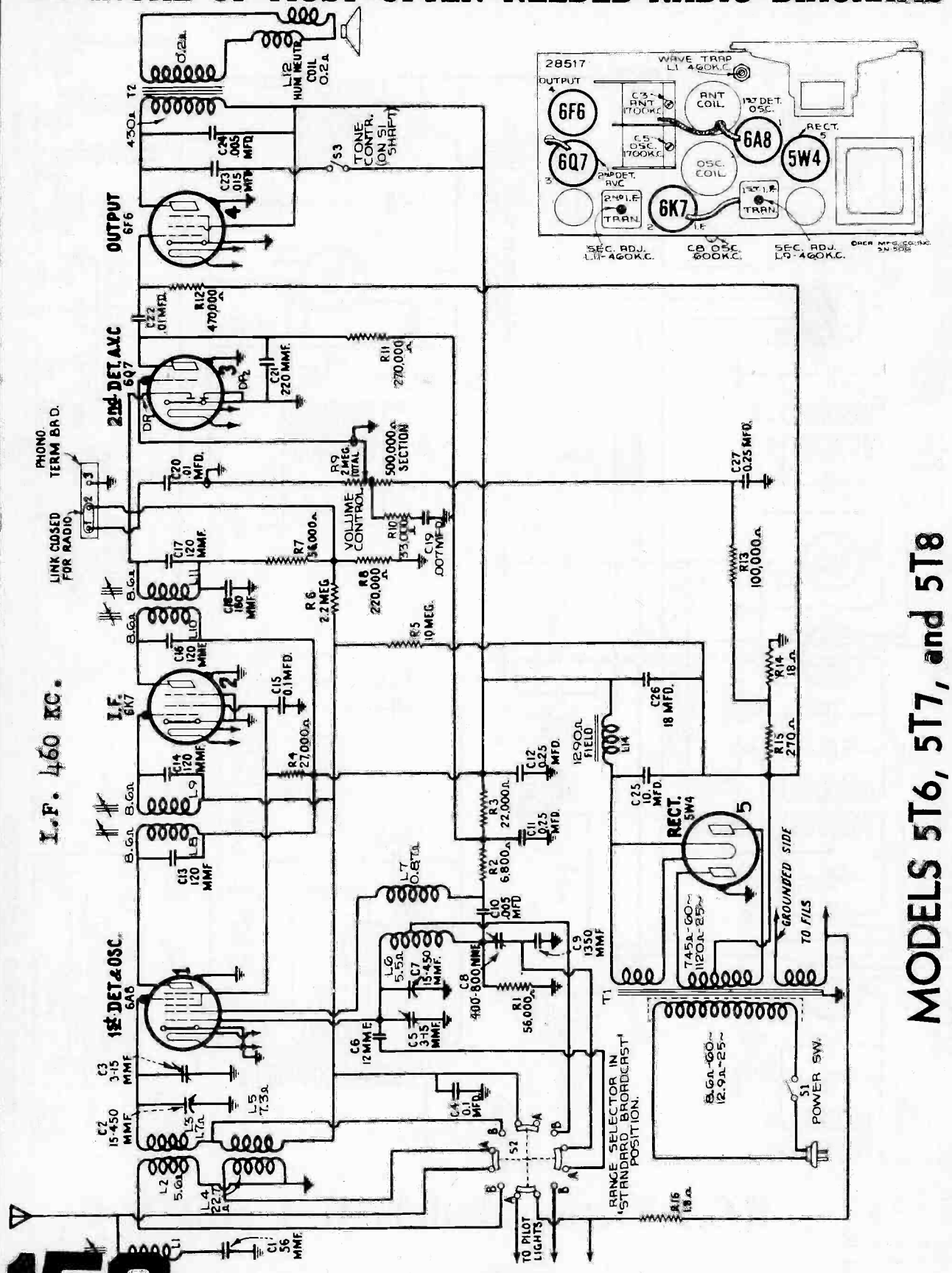
MODELS 5T6, 5T7, and 5T8
I.F. 460 KC.
28517
WAVE TRAP L1 460K.C.
OUTPUT
6F6
6Q7
6K7
6A8
5W4
ANT COIL
OSC. COIL
1ST DET. OSC.
2ND DET. AVC
2ND I.F. TRAN.
1ST I.F. TRAN.
RECT.
SEC. ADJ. L11-460K.C.
C8 OSC. 600K.C.
SEC. ADJ. L9-460K.C.
OUTPUT 6F6
2ND DET. A.V.C. 6Q7
I.F. 6K7
1ST DET. & OSC. 6A8
RECT. 5W4
PHONO. TERM. BRD.
LINK CLOSED FOR RADIO
VOLUME CONTROL
TONE CONTR. (ON SI SHAFT)
RANGE SELECTOR IN "STANDARD BROADCAST" POSITION.
TO PILOT LIGHTS
GROUNDED SIDE
TO FILS
POWER SW.
1290Ω FIELD
8.6Ω-60~ 12.9Ω-25~
745Ω-60~ 1120Ω-25~

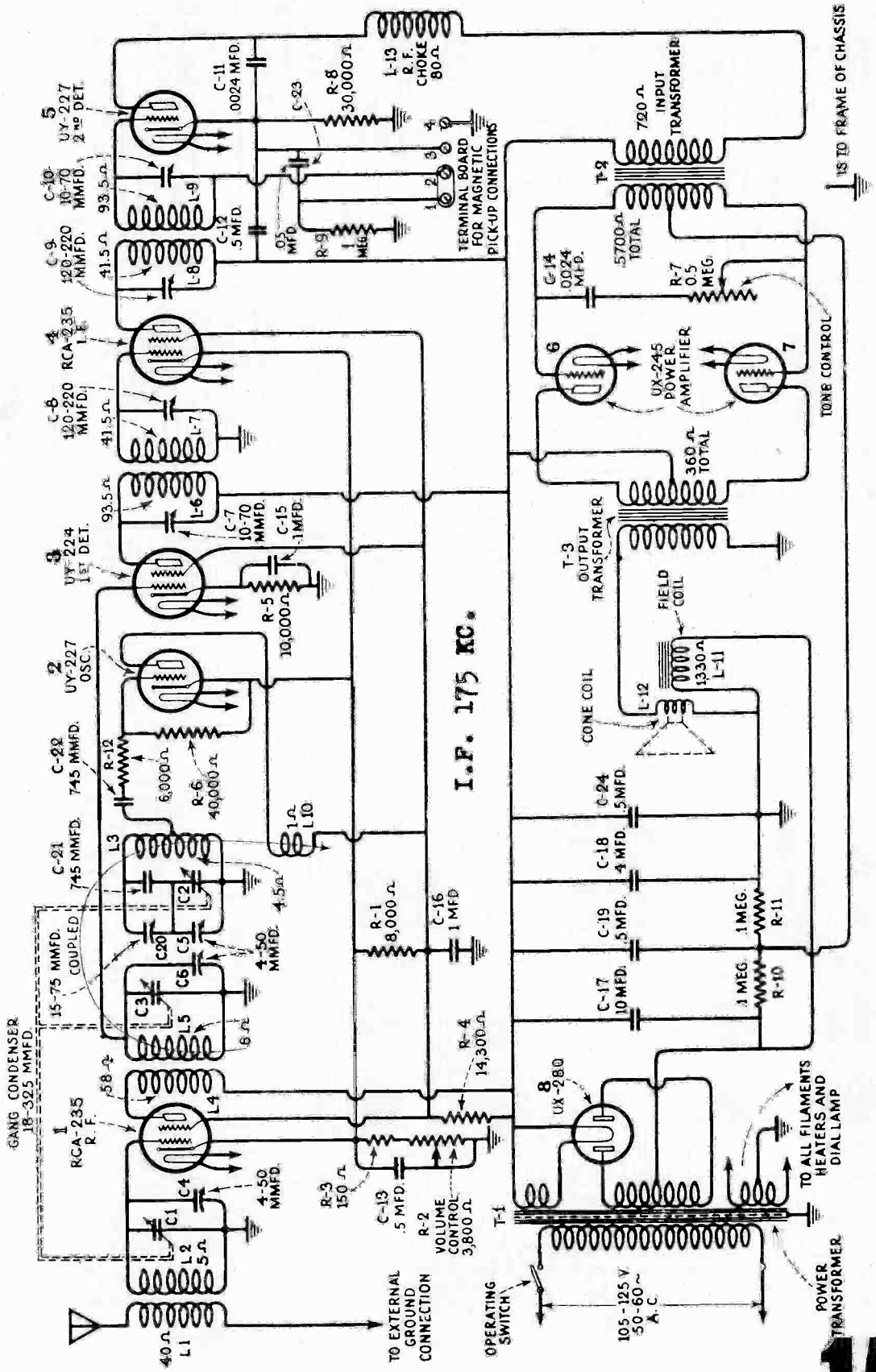
I.F. 175 KC.
R.C.A. R-7, R-9
GANG CONDENSER 18-325 MMFD.
15-75 MMFD. COUPLED
1 RCA-235 R.F.
2 UY-227 OSC.
3 UY-224 1ST DET.
4 RCA-235 I.F.
5 UY-227 2ND DET.
6
7
8 UX-280
UX-245 POWER AMPLIFIER
C-21 745 MMFD.
C-22 745 MMFD.
C-8 120-220 MMFD.
C-9 120-220 MMFD.
C-10 10-70 MMFD.
C-7 10-70 MMFD.
C-11 0024 MFD.
C-12 .5 MFD.
C-15 1 MFD.
C-16 1 MFD.
C-13 .5 MFD.
C-14 0024 MFD.
C-17 10 MFD.
C-18 4 MFD.
C-19 .5 MFD.
C-24 .5 MFD.
R-1 8,000 Ω
R-2 VOLUME CONTROL 3,800 Ω
R-3 150 Ω
R-4 14,300 Ω
R-5 10,000 Ω
R-6 40,000 Ω
R-7 0.5 MEG.
R-8 30,000 Ω
R-9 1 MEG.
R-10 .1 MEG.
R-11 .1 MEG.
R-12 6,000 Ω
L-13 R.F. CHOKE 80 Ω
TERMINAL BOARD FOR MAGNETIC PICK-UP CONNECTIONS
720 Ω INPUT TRANSFORMER
T-2
5700 Ω TOTAL
360 Ω TOTAL
T-3 OUTPUT TRANSFORMER
FIELD COIL
1330 Ω L-11
CONE COIL
L-12
TONE CONTROL
TO FRAME OF CHASSIS
TO ALL FILAMENTS HEATERS AND DIAL LAMP
POWER TRANSFORMER
T-1
105-125 V. 50-60~ A.C.
OPERATING SWITCH
TO EXTERNAL GROUND CONNECTION
40 Ω L1
L2 5 Ω
L3
L4
L5
L6
L7
L8
L9
L10
L-11
C1
C2
C3
C4
C5
C6
C20
C23
.05 MFD
4-50 MMFD.
.58 Ω
6 Ω
4.5 Ω
1 Ω

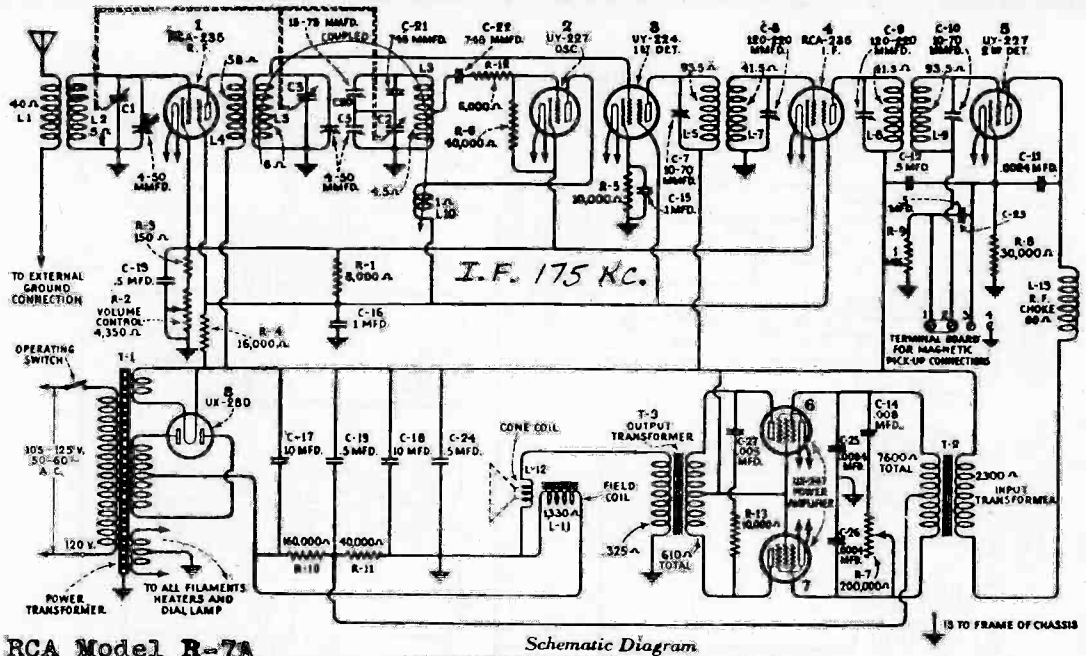

RCA Model R-7A

Schematic Diagram

SOCKET VOLTAGES—110 VOLT A. C. LINE

Radiotron No.	Cathode to Heater Volts D. C.	Cathode or Filament to Control Grid Volts D. C.	Cathode to Screen Grid Volts D. C.	Cathode or Filament to Plate Volts D.C.	Plate Current M. A.	Heater or Filament Volts A. C.
VOLUME CONTROL AT MINIMUM						
1	38	35	50	200	.0	2.2
2	38	0	—	50	3.5	2.2
3	7	6	80	235	0.5	2.2
4	38	35	50	200	.0	2.2
5	22	8	—	210	0.7	2.2
6	—	12	225	220	30	2.2
7	—	12	225	220	30	2.2

Radiotron No.	Cathode to Heater Volts D. C.	Cathode or Filament to Control Grid Volts D. C.	Cathode to Screen Grid Volts D. C.	Cathode or Filament to Plate Volts D.C.	Plate Current M. A.	Heater or Filament Volts A. C.
VOLUME CONTROL AT MAXIMUM						
1	2.0	2.5	60	235	3.5	2.2
2	2.0	.0	—	50	4.5	2.2
3	4.0	4.0	55	230	0.5	2.2
4	2.0	2.5	58	235	3.5	2.2
5	22	8	—	210	0.7	2.2
6	—	12	225	220	30	2.2
7	—	12	225	220	30	2.2

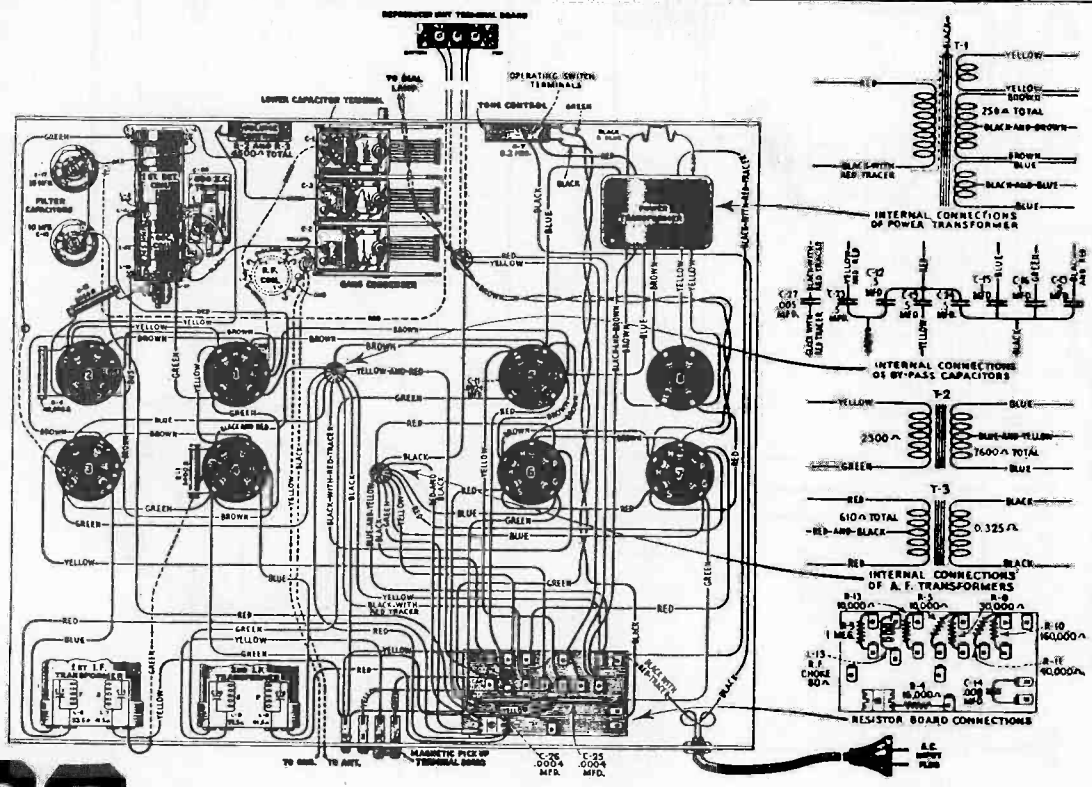

RCA Models R-8, R-12 AC

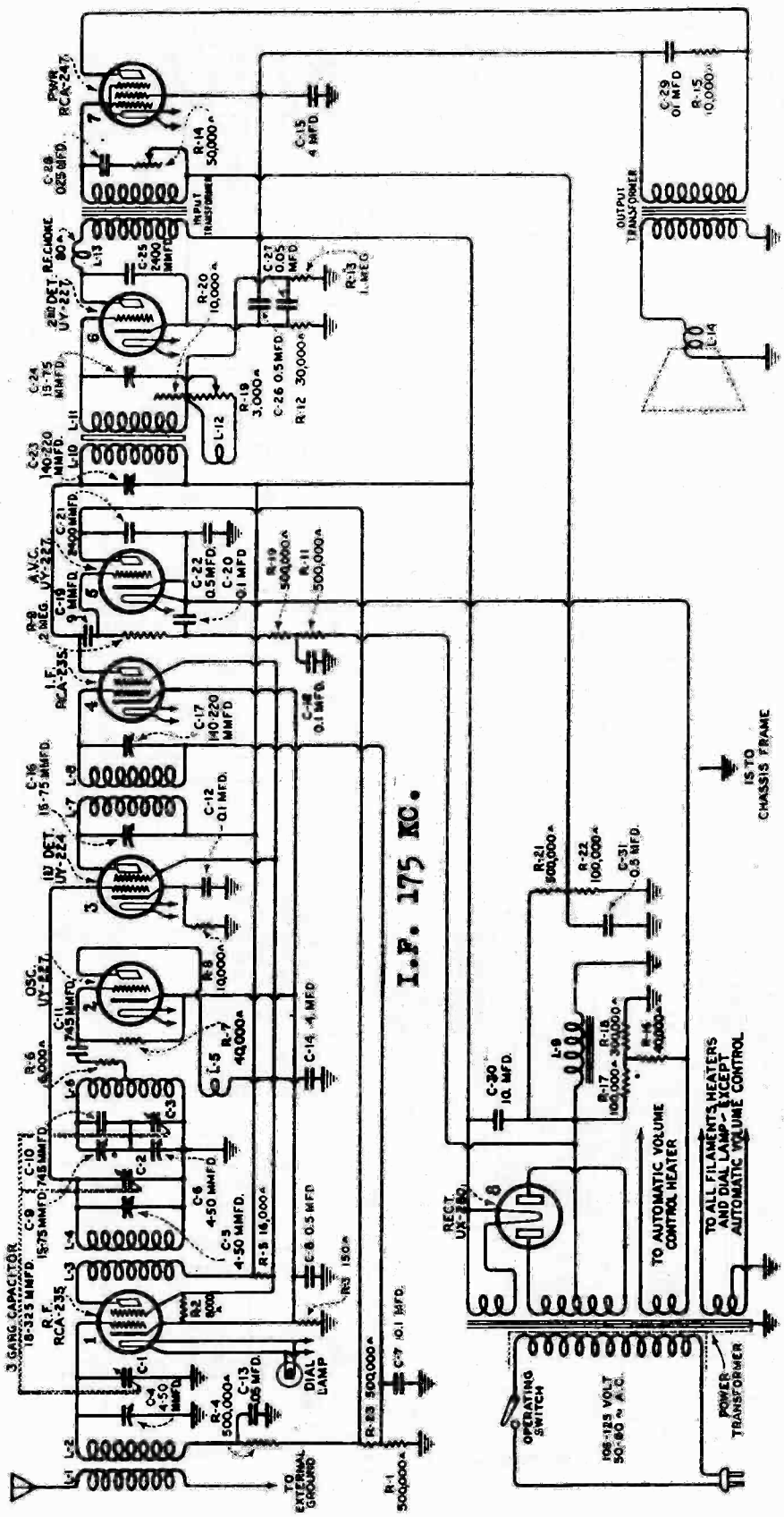

Radiotron No.	Cathode to Heater Volts, D. C.	Cathode or Filament to Control Grid Volts, D. C.	Cathode or Filament to Screen Grid Volts, D. C.	Cathode or Filament to Plate Volts, D. C.	Plate Current M. A.	Screen Current M. A.	Heater or Filament Volts, A. C.
1. R. F.	4.0	0.5	70	260	4.0	0.5	2.66
2. Osc.	4.0	0	—	65	6.0		2.66
3. 1st Det.	7.0	6.0	70	260	0.75	0.1	2.66
4. I. F.	4.0	4.0	70	260	1.0	0.5	2.66
5. 2nd Det.	28.0	10.0	—	250	1.0		2.66
6. A. V. C.	0	0	—	25	0		2.66
7. Power	—	10.0	290	280	35.0		2.66

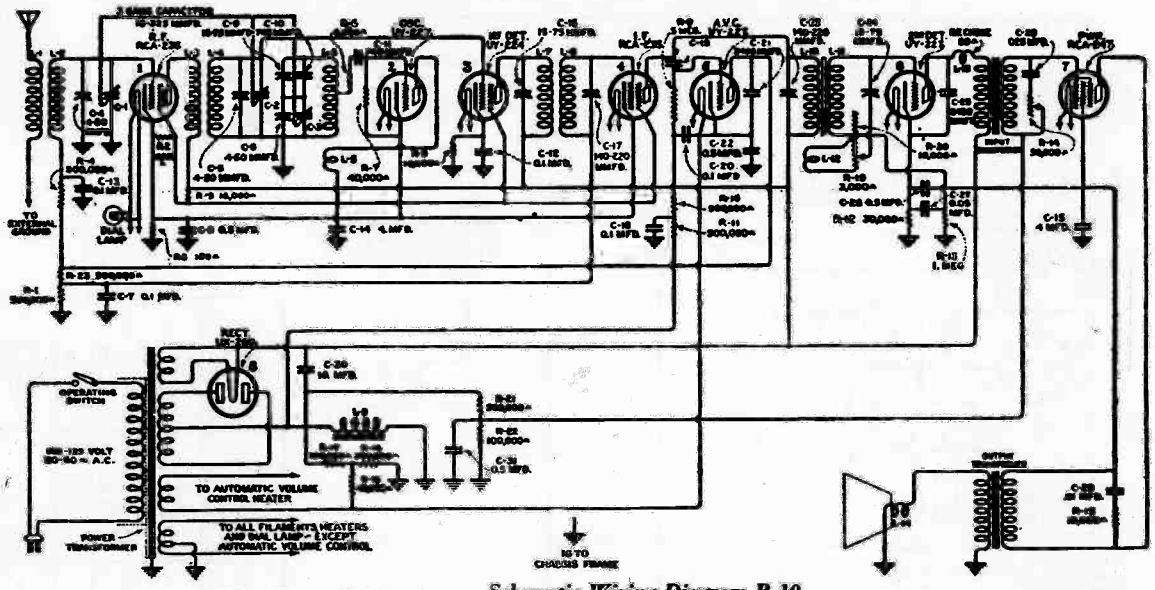

RCA Victor

Schematic Wiring Diagram R-10

I.F. 175 KC.

Radiotron No.	Cathode to Heater Volts, D. C.	Cathode or Filament to Control Grid Volts, D. C.	Cathode or Filament to Screen Grid Volts, D. C.	Cathode or Filament to Plate Volts, D. C.	Plate Current M. A.	Screen Current M. A.	Heater or Filament Volts, A. C.
1	2	*0.1	75	210	5.0	0.5	2.2
2	8	0	—	60	5.0	—	2.2
3	7	7.0	70	205	0.5	0.1	2.2
4	2	*0.1	75	210	5.0	0.5	2.2
5	0	0	—	30	0	—	2.2
6	20	*8.0	—	185	0.5	—	2.2
7	—	10	210	210	25	—	2.2

*Not true reading due to resistance in circuit.

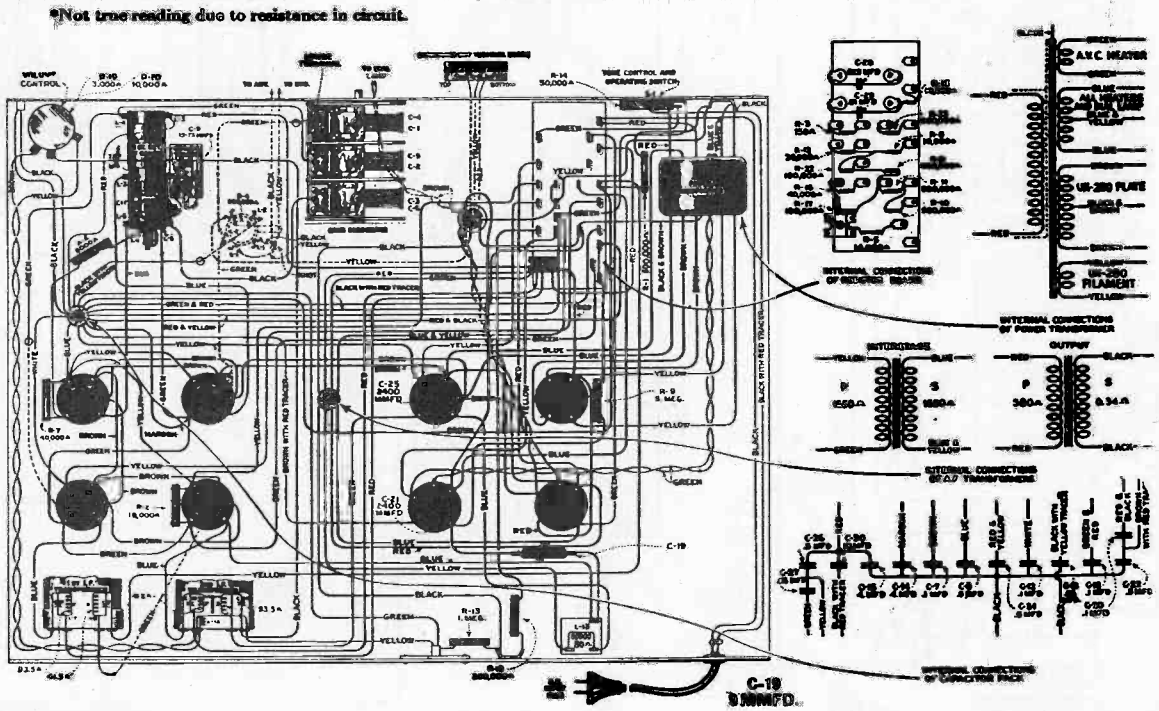

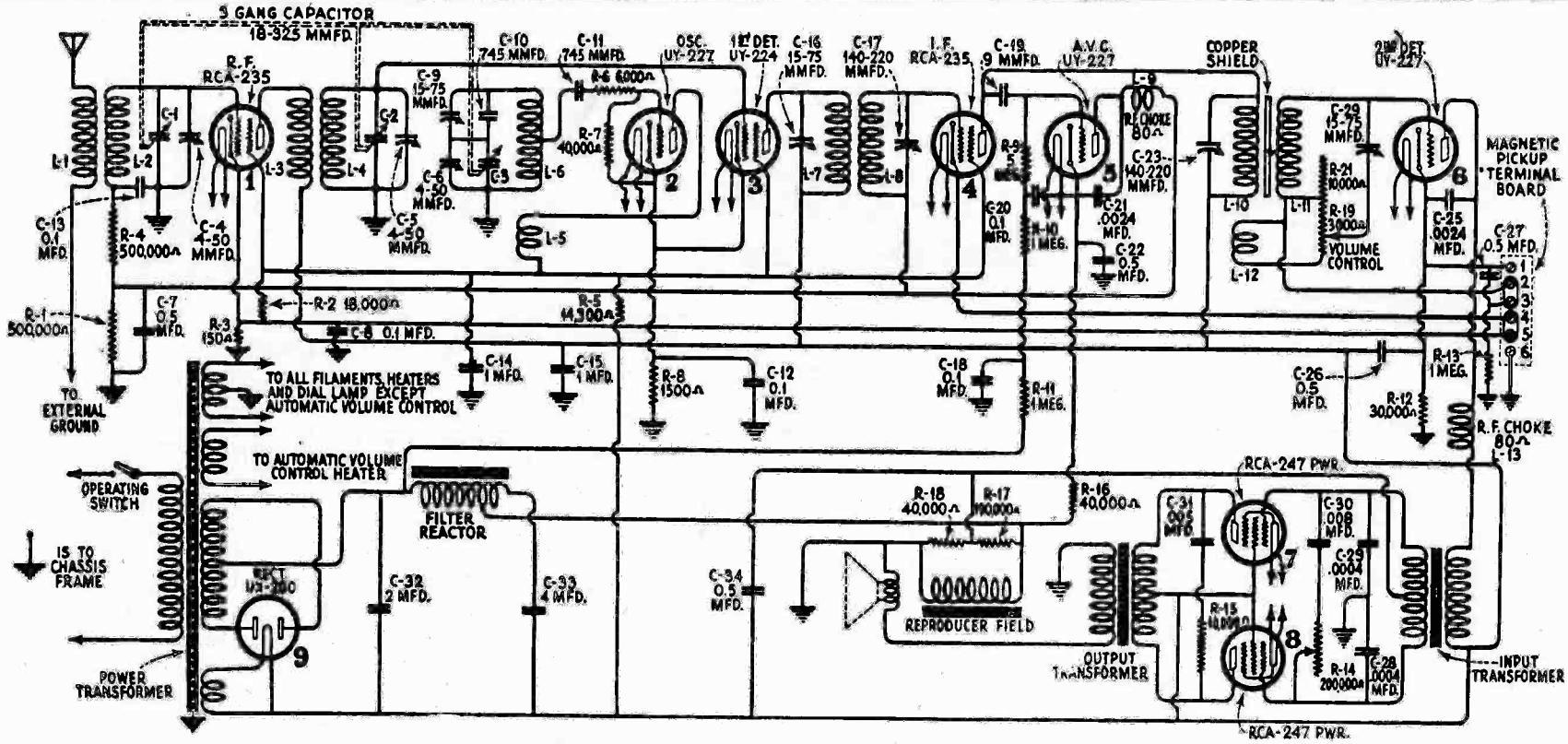

R.C.A. *Schematic Circuit Diagram of Model R-11*

I.F. 175 KC.

Radiotron No.	Cathode to Heater Volts D. C.	Cathode or Filament to Control Grid Volts, D. C.	Cathode or Filament to Screen Grid Volts, D. C.	Cathode or Filament to Plate Volts, D. C.	Plate Current M. A.	Screen Current M. A.	Heater or Filament Volts, A. C.
1	2	*0.1	75	205	5.0	0.5	2.2
2	8	0	—	60	5.0	—	2.2
3	7	7.0	70	200	0.5	0.1	2.2
4	2	*0.1	75	205	5.0	0.5	2.2
5	0	0	—	25	0	—	2.2
6	20	*8.0	—	180	0.5	—	2.2
7	—	10	210	205	25	—	2.2
8	—	10	210	205	25	—	2.2

* Not true reading due to resistance in circuit.

RCA VICTOR MODEL 13K

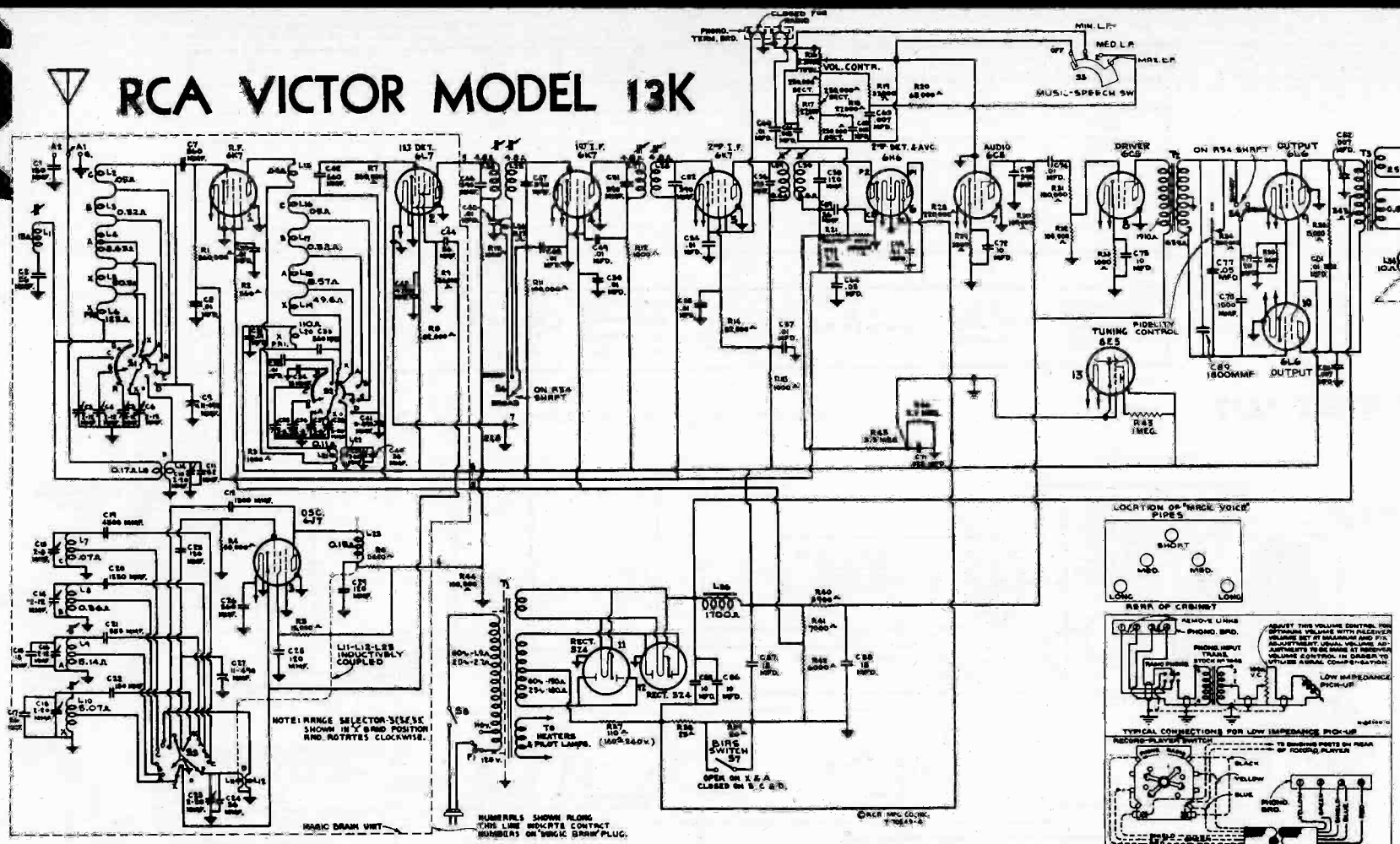

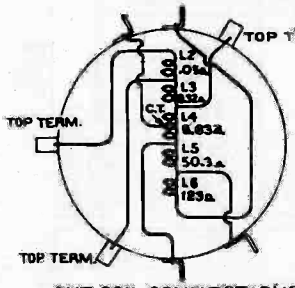

ANT. COIL CONNECTIONS

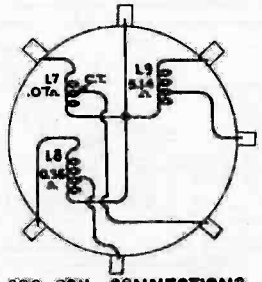

OSC. COIL CONNECTIONS

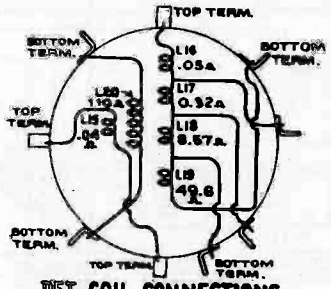

DET. COIL CONNECTIONS

I.F. 460 KC.

SERVICE HINTS

(1) Excessive heating of the 6E5 tube may be due to high cathode current — in excess of 7 ma. The tube should be replaced and the condition of the 5Z4 rectifier checked.

(2) Low sensitivity or intermittent operation may be caused by C-43 or C-33 developing low-resistance leakage. Check both capacitors and replace if found defective.

(3) Low sensitivity around 15—16 megacycles may be caused by dirty or poor contact of grounding contact finger on S-3.

(4) Motorboating may be due to intermittent capacitor Stock No. 18025.

RCA RADIOLA 16

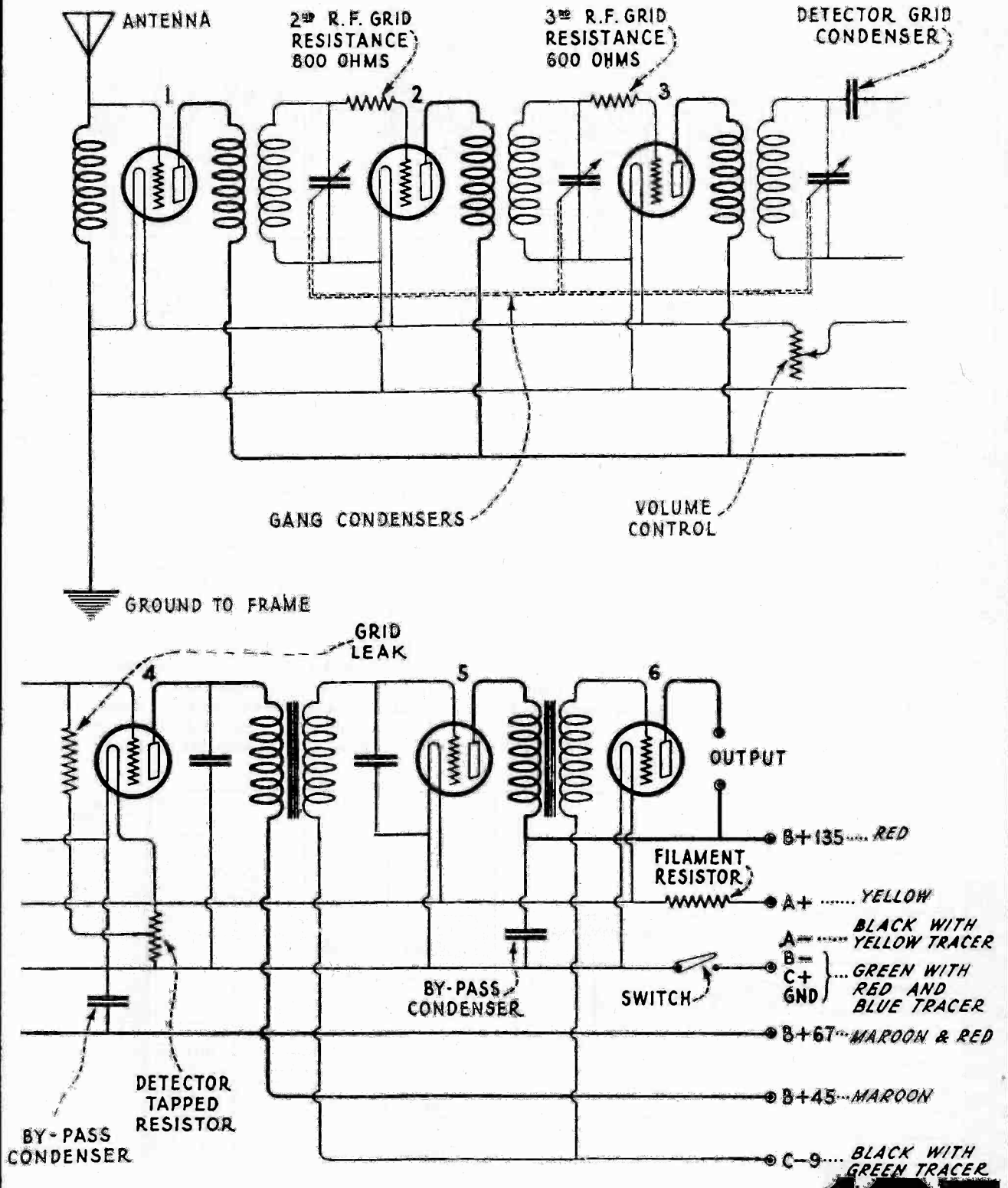

RCA RADIOLA 17

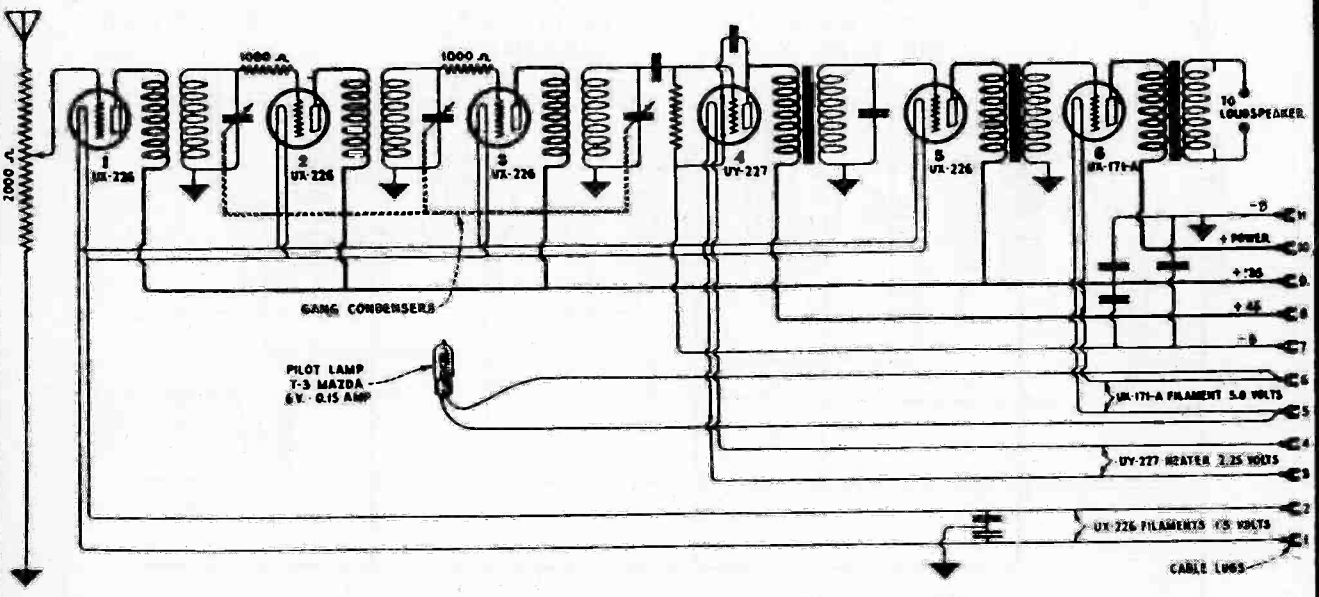

Schematic circuit diagram of receiver assembly.

Indication	Cause	Remedy
No signals	Defective operating switch	Repair or replace switch
	Loose volume control arm	Tighten volume control arm
	Defective power cable	Replace power cable
	Defective R.F. transformer	Replace R.F. transformer assembly
	Defective A.F. transformer	Replace A.F. transformer assembly
	Defective By-pass condenser	Replace By-pass condenser
	Defective socket power unit	Check socket power unit by means of continuity test and make any repairs or replacements necessary

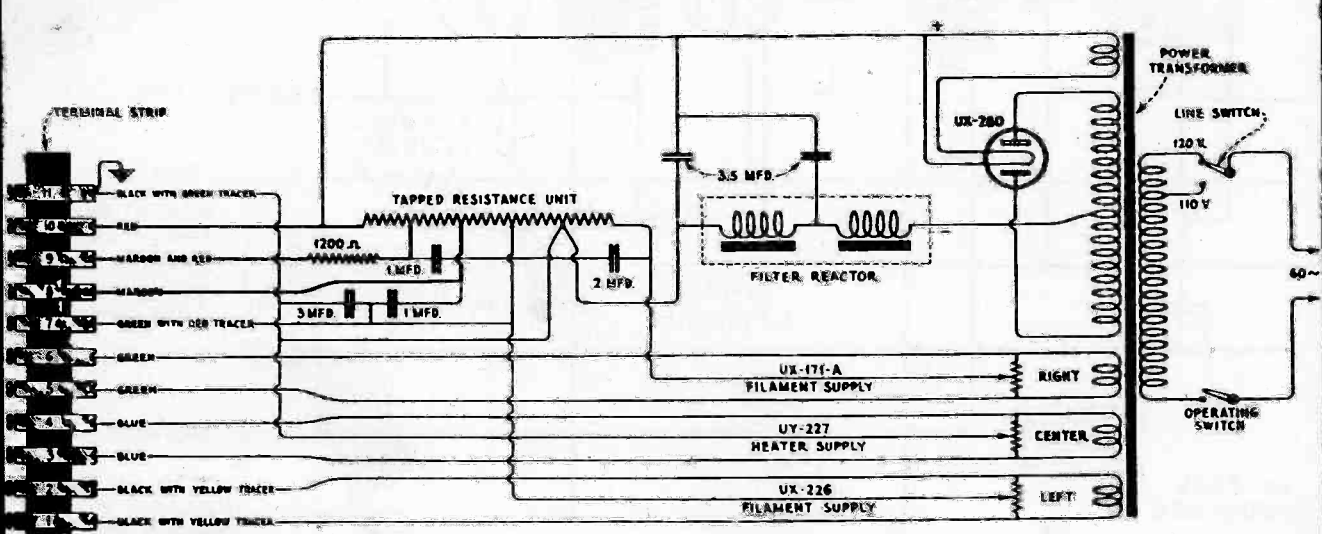

COMPILED BY M. N. BEITMAN, SUPREME PUBLICATIONS

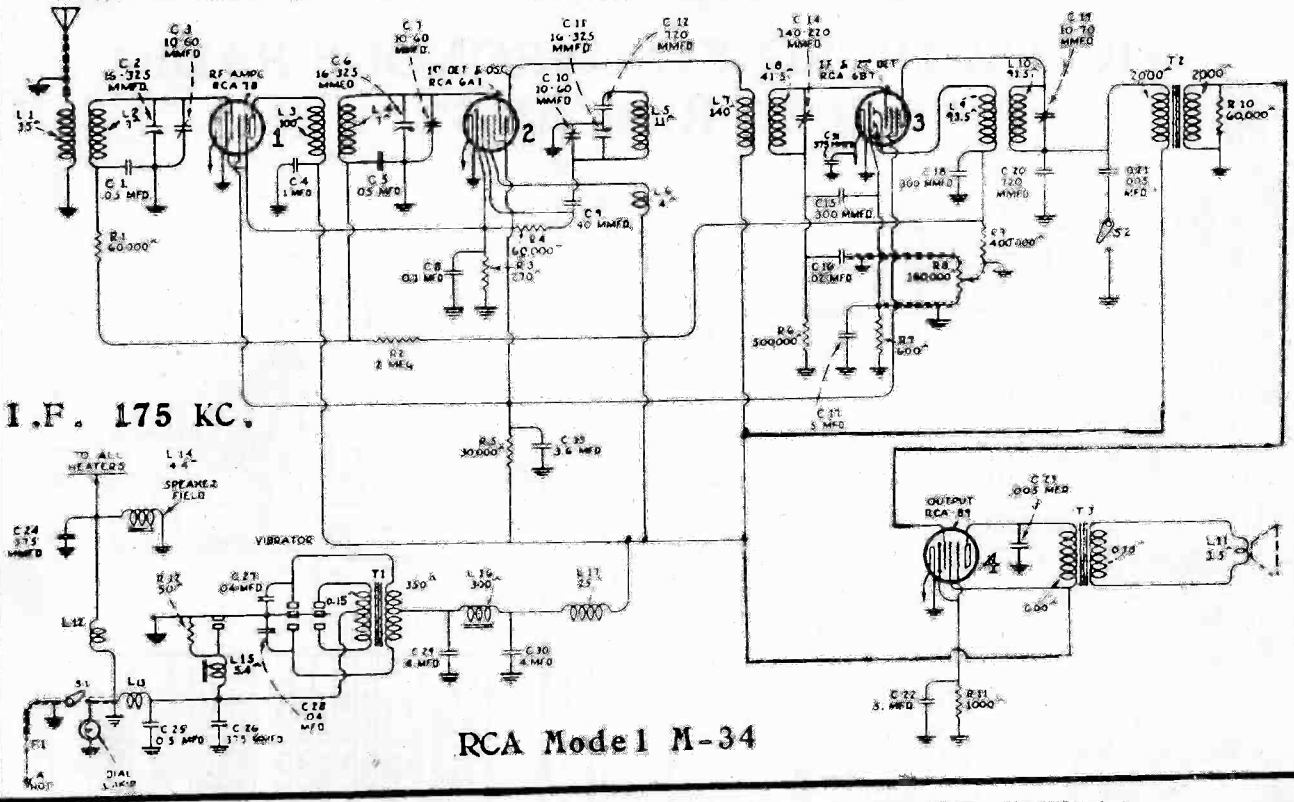

RCA Model M-34

MAXIMUM VOLUME CONTROL SETTING—NO SIGNAL

Radiotron No.	Cathode to Control Grid, Volts	Cathode to Screen Grid, Volts	Cathode to Plate, Volts	Plate Current, M. A.	Heater Volts
1. RCA-58 R. F. Amplifier	3.0	95	250	5.0	2.33
2. RCA-2A7 First Detector Oscillator	3.0	95	250	3.0	2.33
3. RCA-57 Second Detector	6.0	89	170	0.3	2.33
4. RCA-2A5 Power Amplifier	18.0	235	220	32.0	2.33
5. RCA-80 Rectifier	275 Volts PLATE TO PLATE—60 M. A. TOTAL				4.82
TOTAL CATHODE CURRENT—11 M. A.					

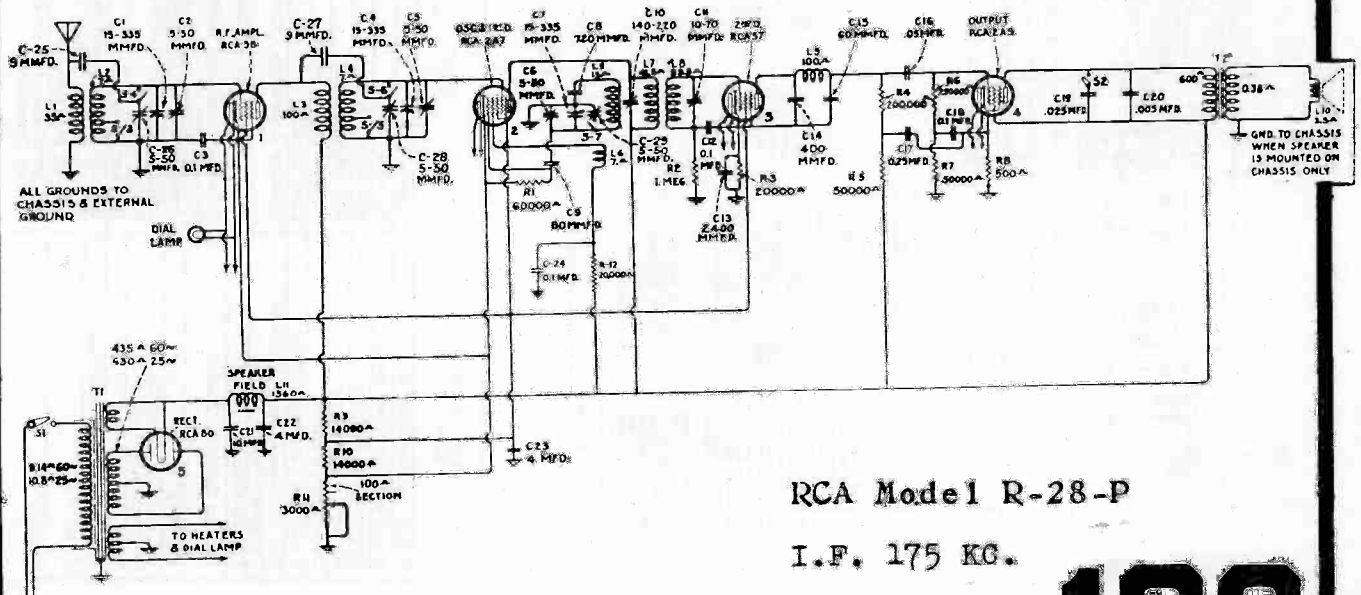

RCA Model R-28-P

I.F. 175 KC.

VICTOR MICRO-SYNCHRONOUS RADIO

R-35, R-39, RE-57

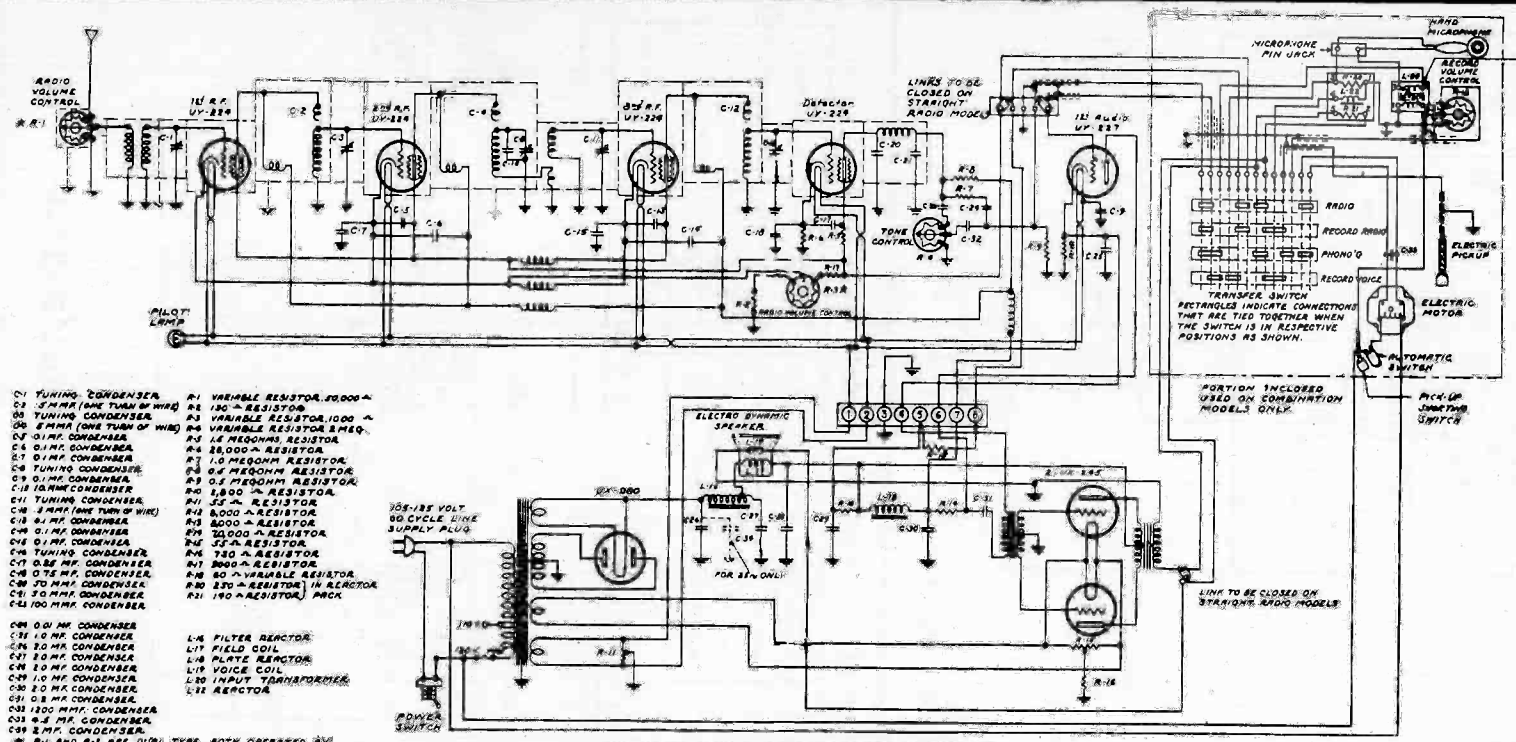

NOTE—Broken lines along which indicate grounded shielding.

Schematic Wiring Diagram Victor Mico-Synchronous Radio, Models R-35, R-39, and RE-57.

TEST BETWEEN TERMINALS	PART	APPROXIMATE VOLTAGE (10 V SCALE)	APPROXIMATE RESISTANCE (OHMETER)
F and 7 of Terminal Board	Tapped Choke	8.4 Volts	300 Ohms
4 and 6 of Terminal Board	Speaker Field	7.2 Volts	1,500 Ohms
Brown-Grey Resistor	8000 Ohm Resistor	3.4 Volts	8,000 Ohms
Brown-Grey Resistor	8000 Ohm Resistor	3.4 Volts	8,000 Ohms
Green-Red Resistor	70,000 Ohm Resistor	.5 Volts	70,000 Ohms
7 and 8 of Condenser Bank	Plate Choke	4.0 Volts	6,000 Ohms
2 of Condenser Bank and 4 of Terminal Strip	Primary Interstage Transformer	6.4 Volts	2,000 Ohms
UX-245 Grids	Secondary Interstage Transformer	2.4 Volts	14,000 Ohms
UX-245 Grids to Chassis	One-half Secondary Interstage Transformer	3.4 Volts 3.6 Volts	5,500 Ohms 7,500 Ohms
UX-245 Plates	Primary Output Transformer	8.4 Volts	330 Ohms
UX-245 Plates and No. 3 of Condenser Bank	One-half Primary Output Transformer	8.8 Volts	165 Ohms
Voice Coil	Speaker Voice Coil	9.0 Volts	0 Ohms
14 and 15 of Terminal Board	Primary Power Transformer	9.0 Volts	0 Ohms
P and P	High Voltage Secondary Output Transformer	8.4 Volts	340 Ohms
F and F	UX-280 Filament Secondary Output Transformer	9.0 Volts	0 Ohms

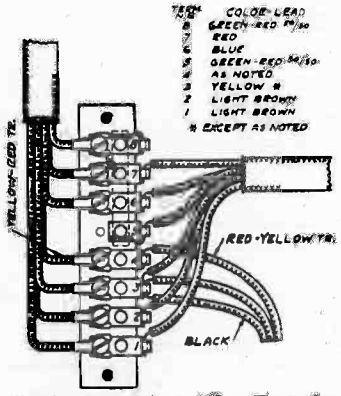

Top View of Amplifier Terminal Strip.

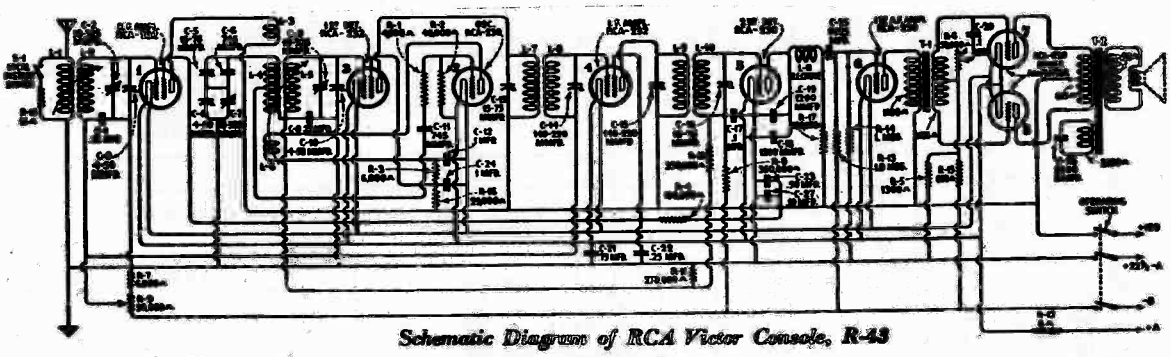

Schematic Diagram of RCA Victor Console, R-43

Tube No.	Filament to Control Grid Volts	Filament to Screen Grid Volts	Filament to Plate Volts	Plate Current M. A.	Filament Volts
VOLUME CONTROL AT MINIMUM					
1	22	55	155	0	2.0
2	—	—	50	3.0	2.0
3	0.5	65	150	0.5	2.0
4	22	55	155	0	2.0
5	5.0	—	90	0	2.0
6	2.0	—	150	2.5	2.0
7	15.0	—	150	0.5	2.0
8	15.0		150	0.5	2.0
VOLUME CONTROL AT MAXIMUM					
1	1.5	45	150	2.5	2.0
2	—	—	50	3.0	2.0
3	0.5	60	150	0.5	2.0
4	1.5	45	150	2.5	2.0
5	5.0	—	90	0	2.0
6	2.0	—	150	2.5	2.0
7	15.0	—	150	0.5	2.0
8	15.0	—	150	0.5	2.0

RCA Victor R-17-M

Radiotron No.	Cathode or Filament to Control Grid Volts	Cathode or Filament to Screen Grid Volts	Cathode or Filament to Plate Volts	Plate Current M. A.	Filament or Heater Volts
1. RCA-39 R. F.	3.0	105.0	105	7.0	6.0
2. RCA-36 Detector	*0.75	11.0	*60	0.025	6.0
3. RCA-38 Output	11.0	100.0	95	5.0	6.0
4. RCA-37 Rectifier	—	—	115	15.0	6.0

*Impossible to measure on ordinary voltmeter.

All Voltages on D. C. will be slightly lower

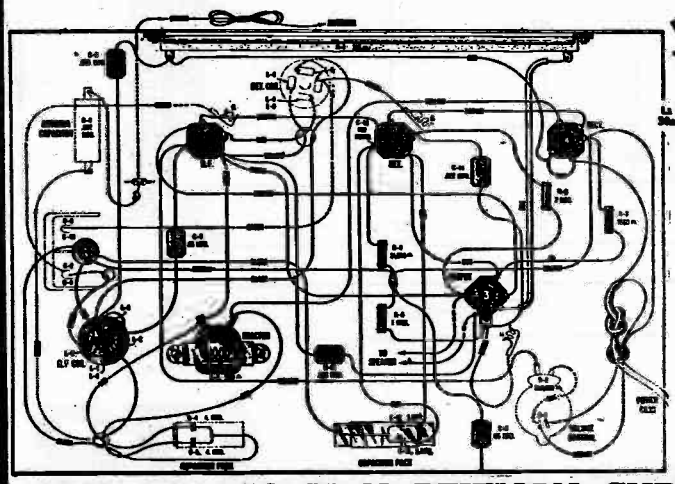

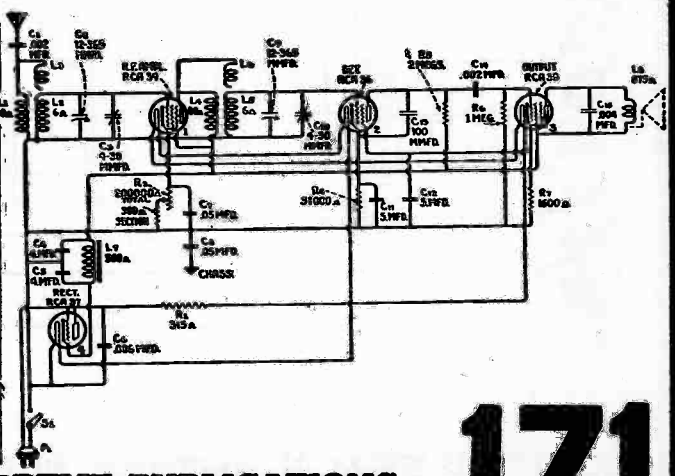

RCA RADIOLAS 44 and 46

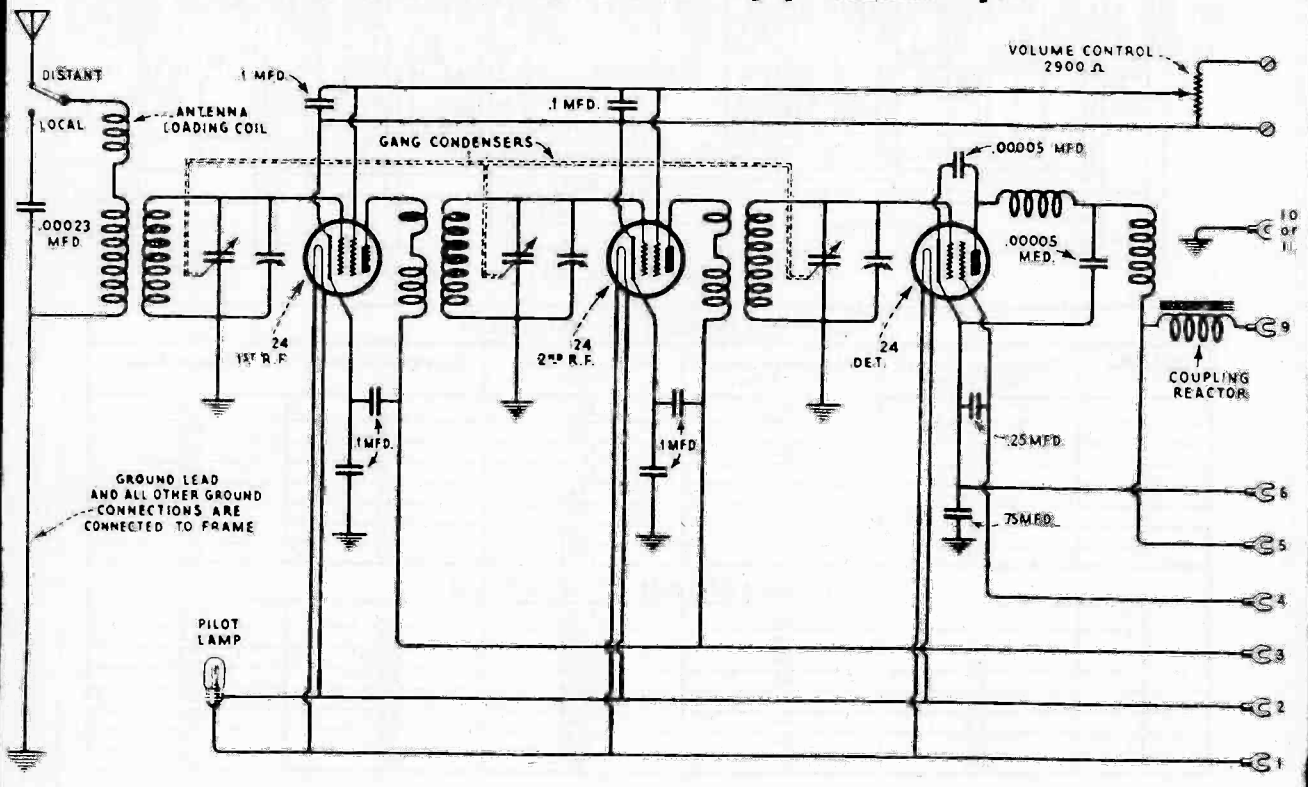

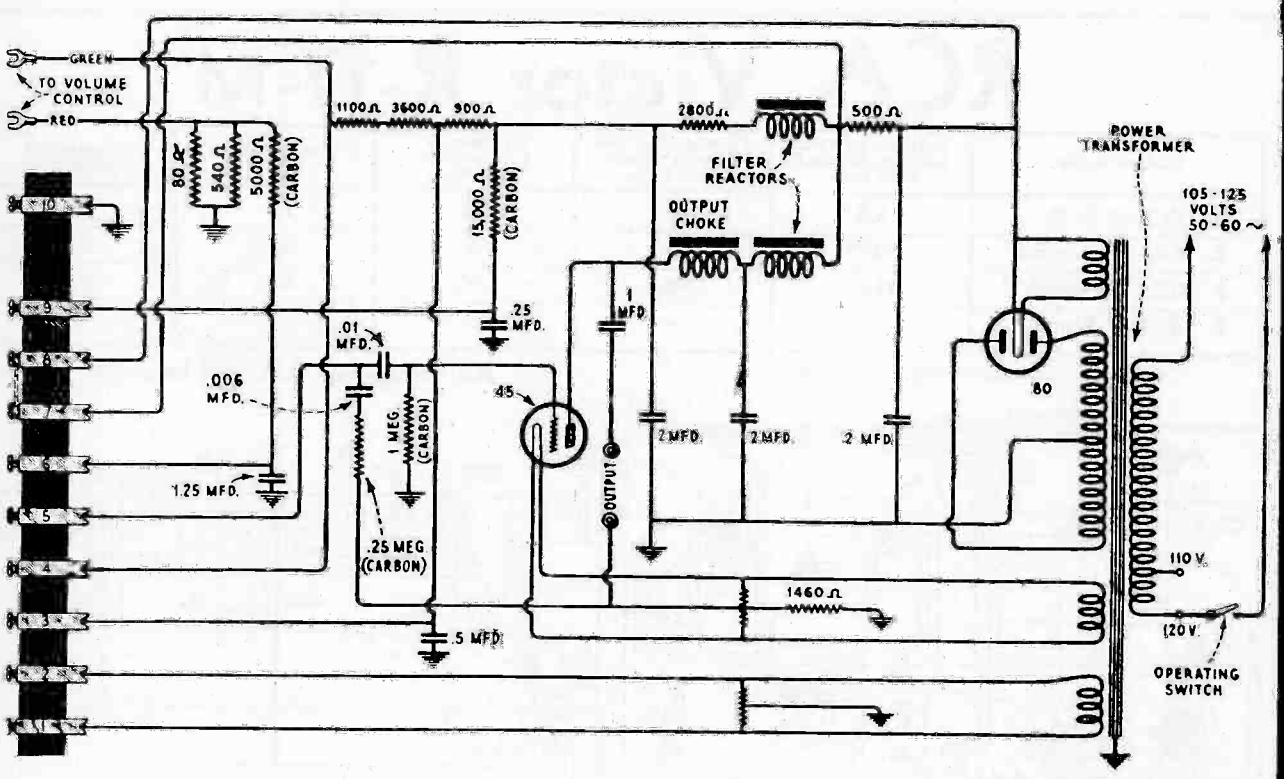

Radiola 47

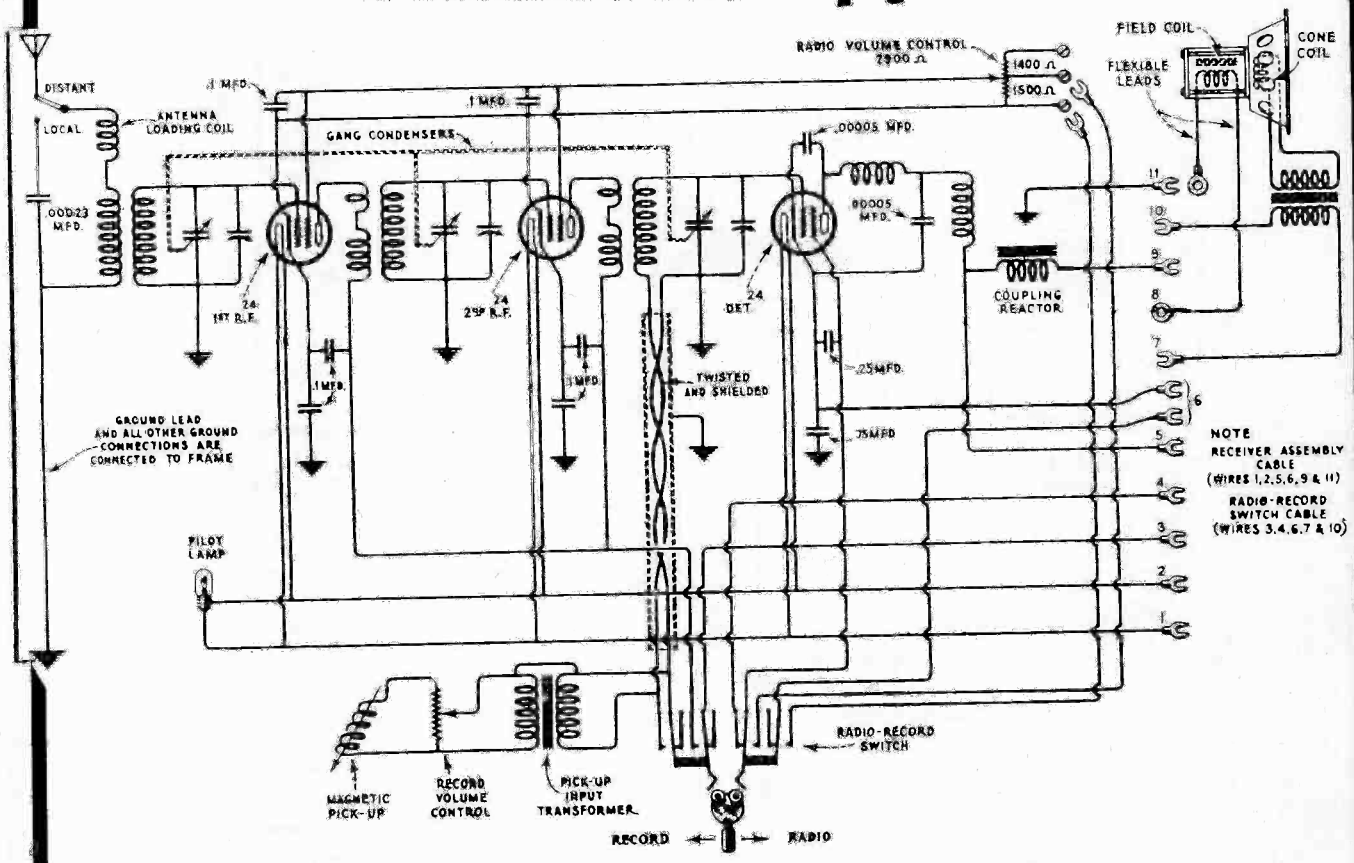

Schematic circuit diagram of receiver, phonograph pick-up and reproducer

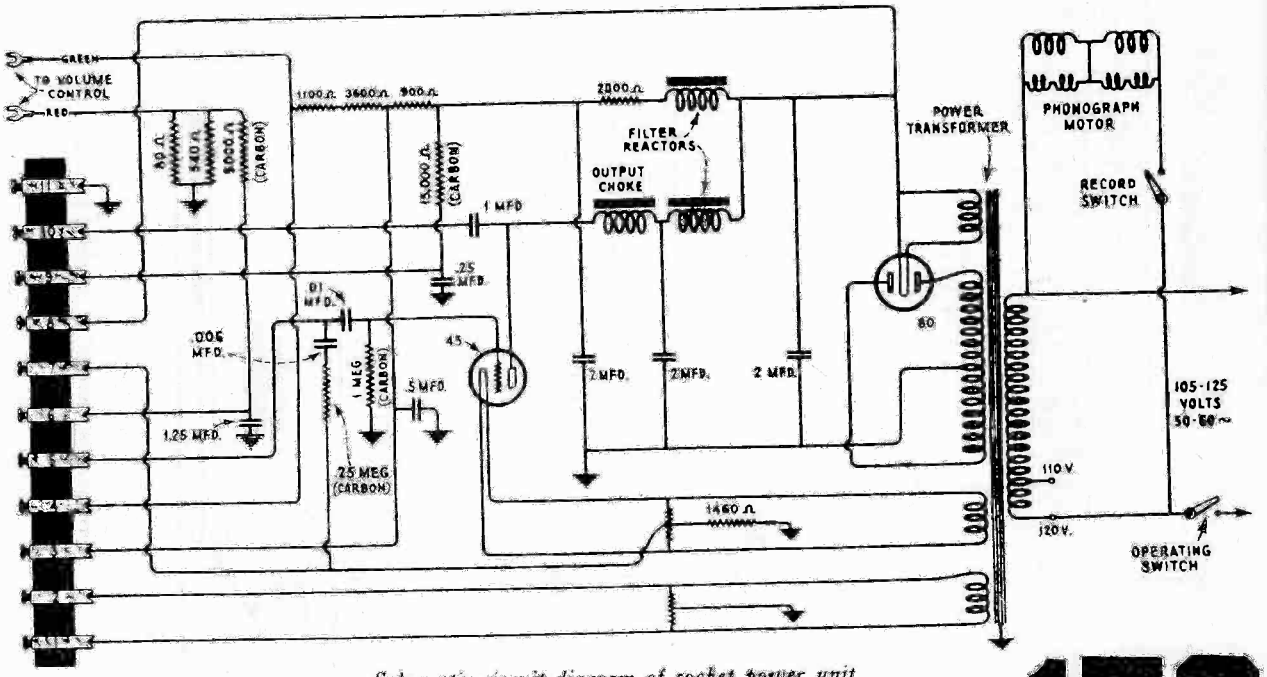

Schematic circuit diagram of socket power unit

RCA RADIOLA 48

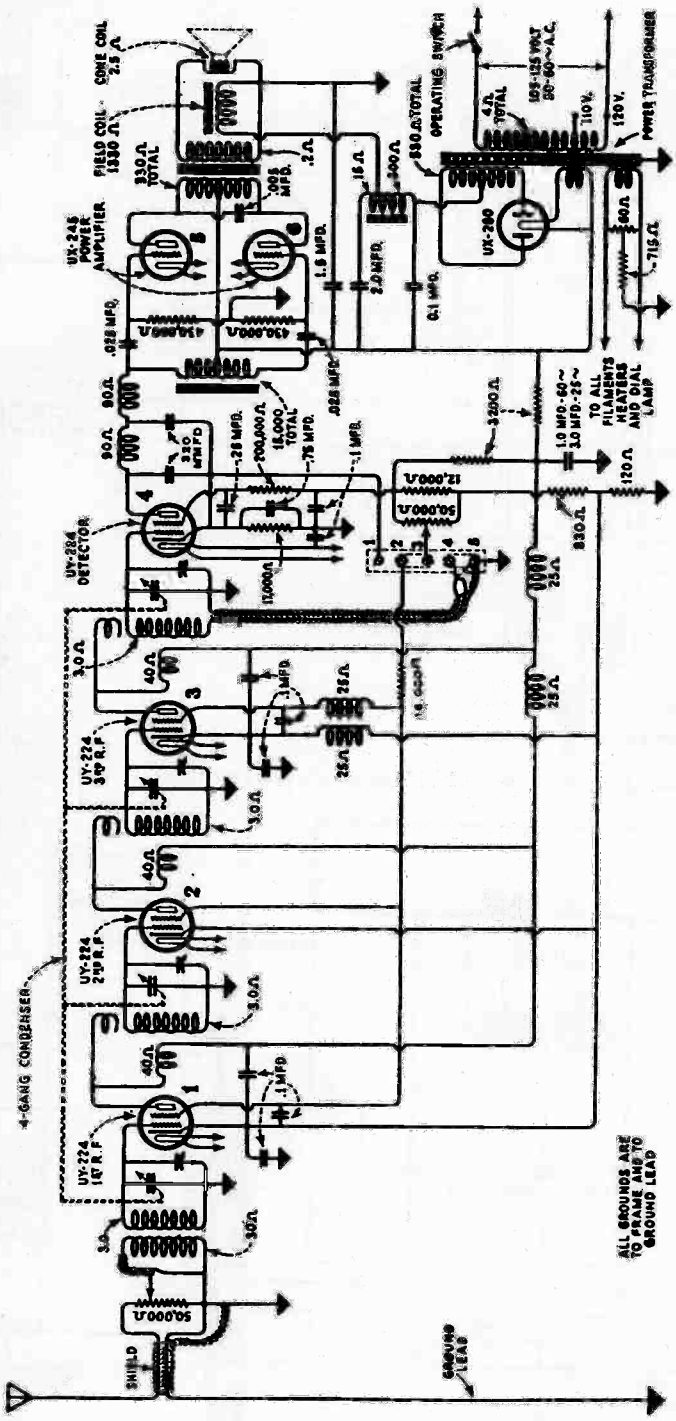

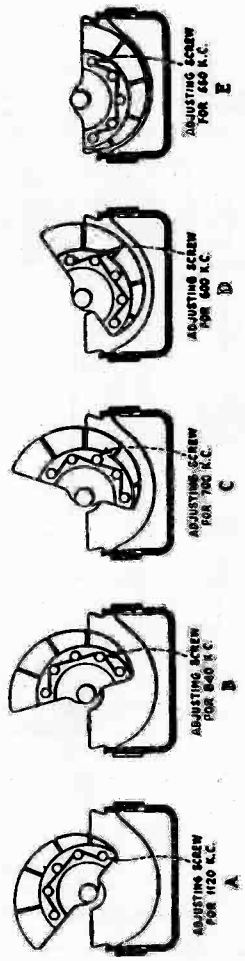

Gang condenser adjustment positions.

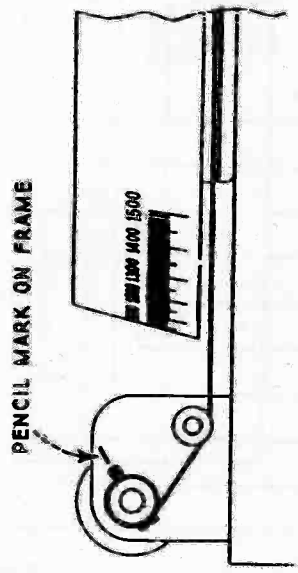

View showing method of checking position of dial.

COMPILED BY M. N. BEITMAN, SUPREME PUBLICATIONS

MANUAL OF MOST-OFTEN-NEEDED RADIO DIAGRAMS

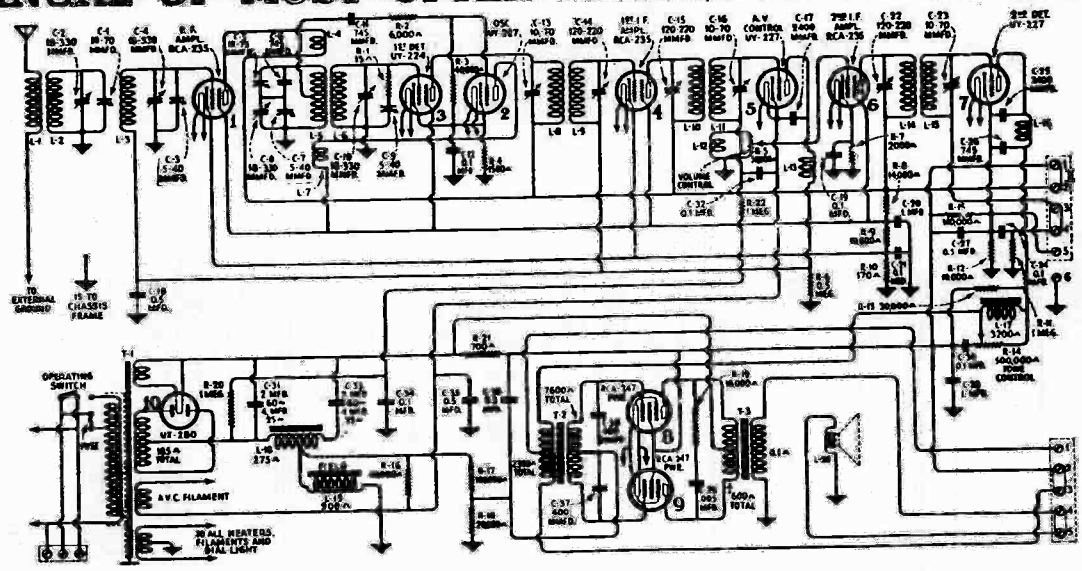

RCA Models R-50, R-55 I.F. 175 KC.

MODELS 94BK2 and 94BT2

Chassis No. RC-390 RC-390

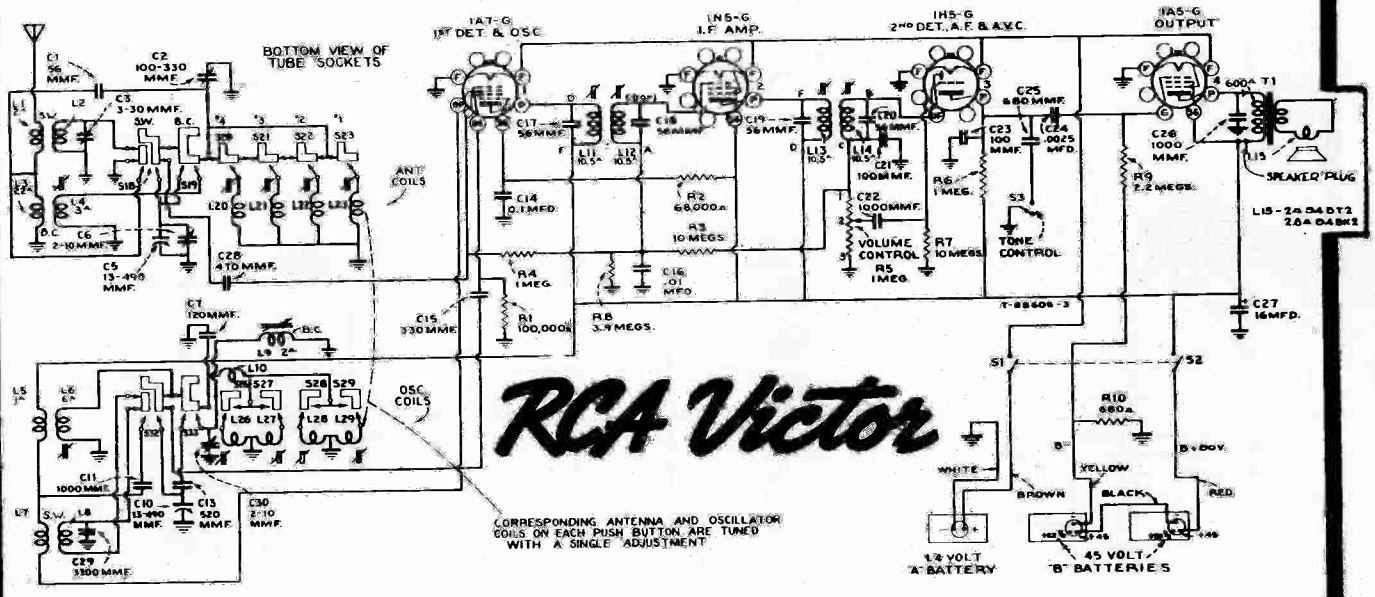

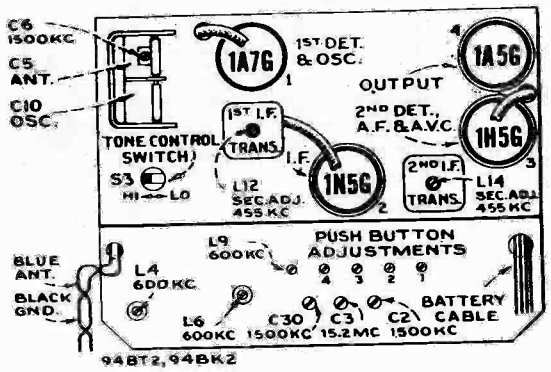

Tube and Trimmer Locations

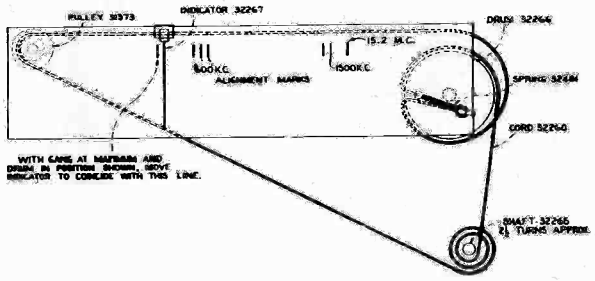

Dial Drive Hookup and Alignment Marks

RCA RADIOLA 60

(105-125 Volts. 50-60 Cycle A. C.)

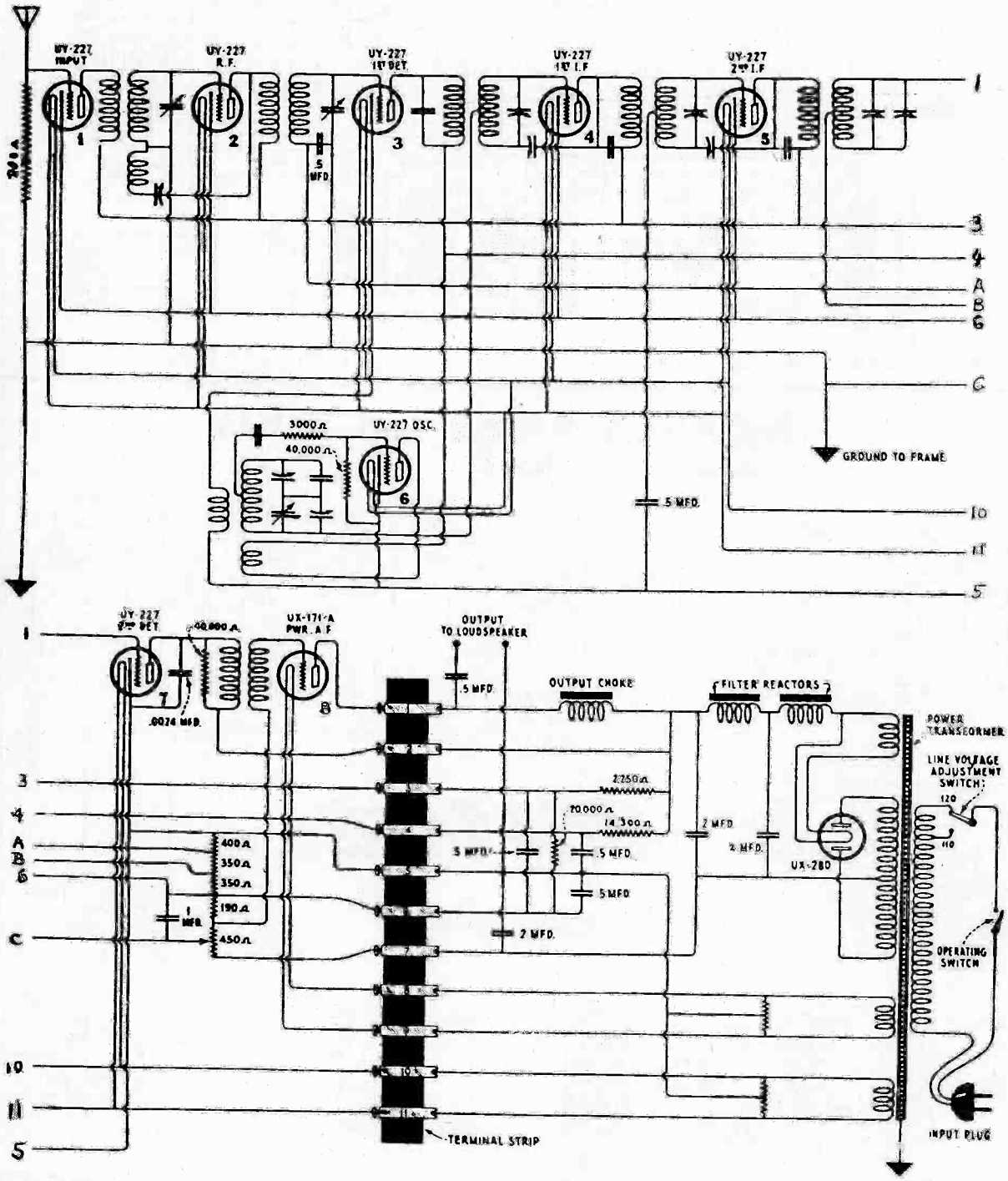

I.F. 180 KC.

COMPILED BY M. N. BEITMAN, SUPREME PUBLICATIONS

RCA Radiola 80, 82, 86

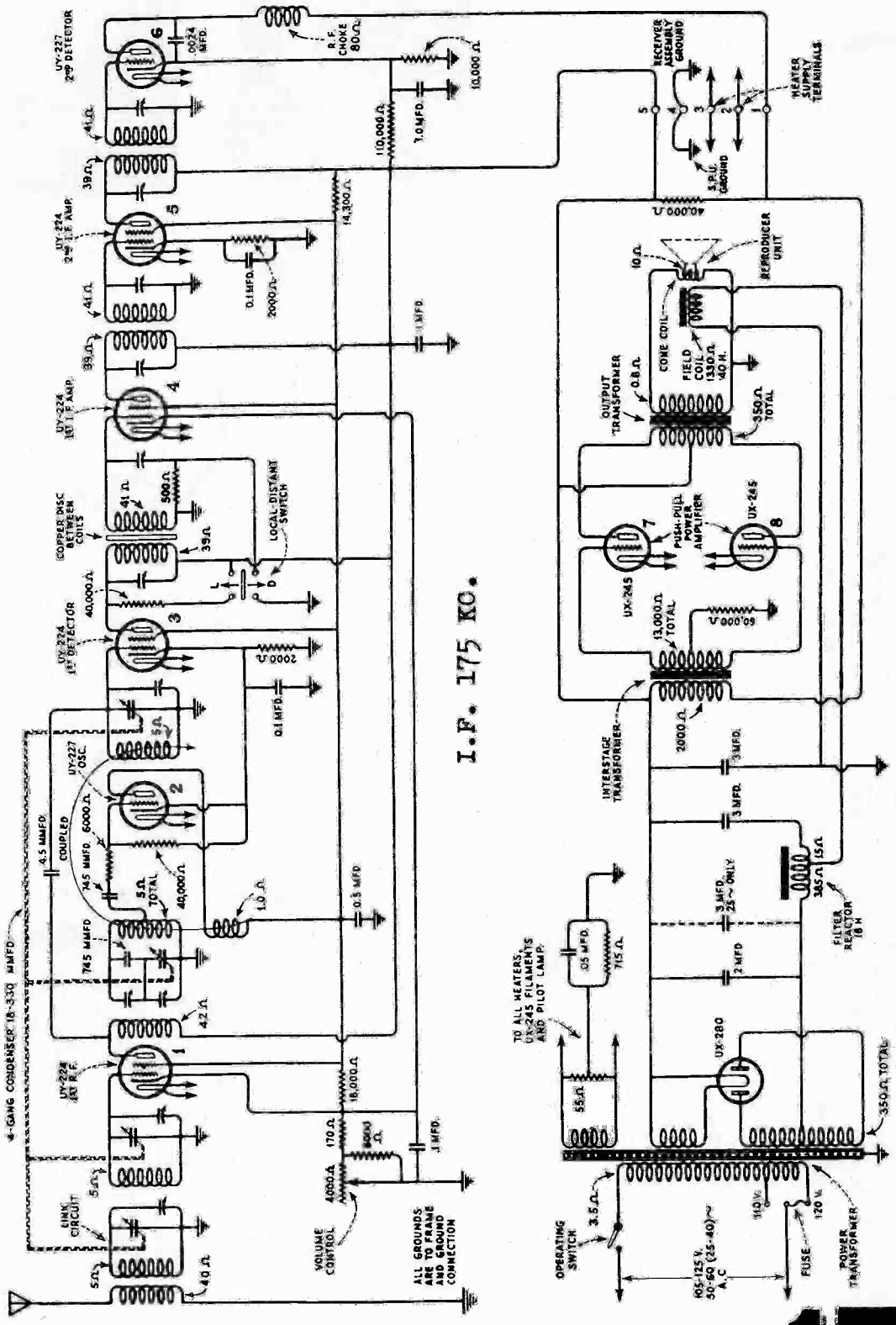

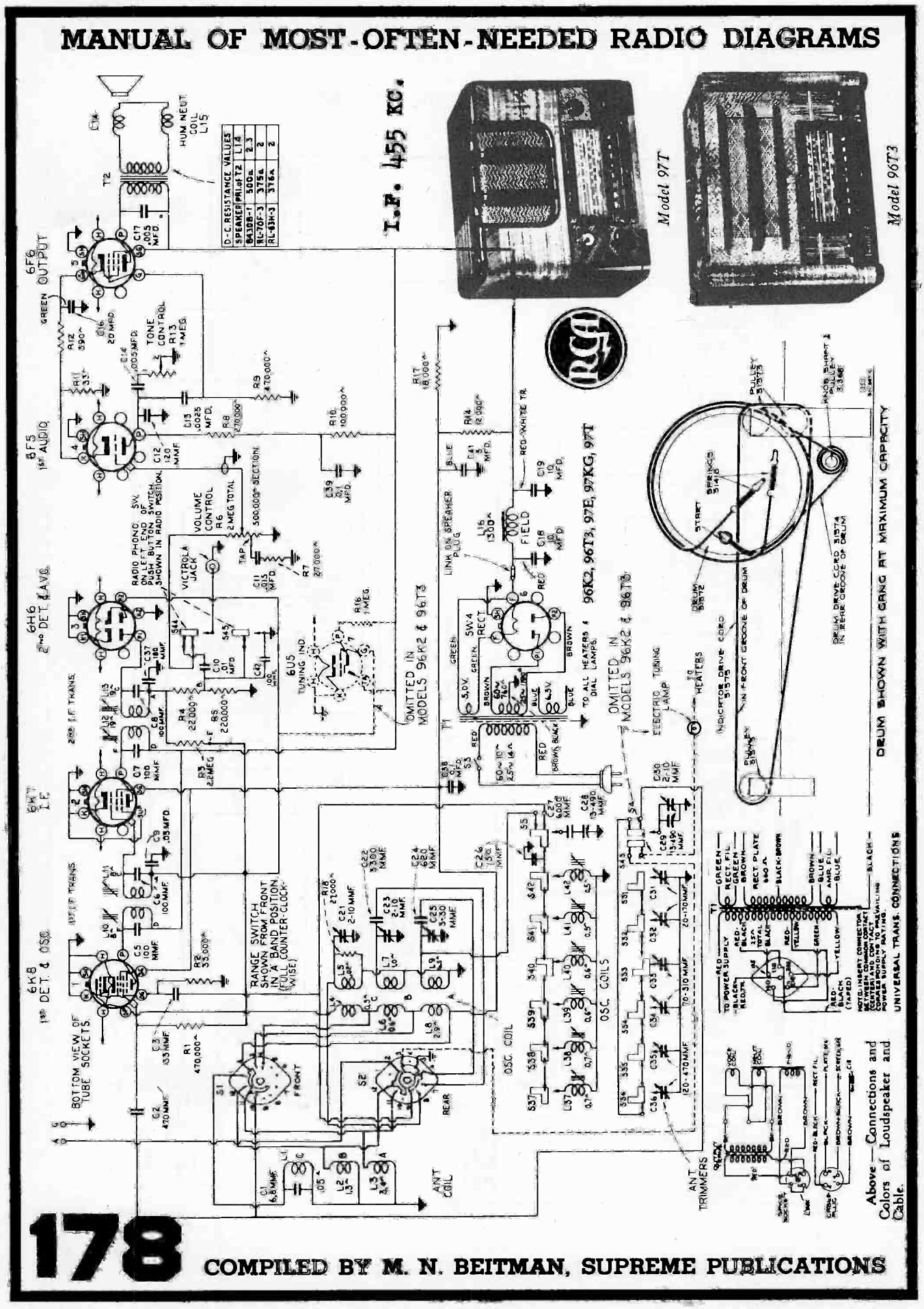

Above — Connections and Colors of Loudspeaker and Cable.

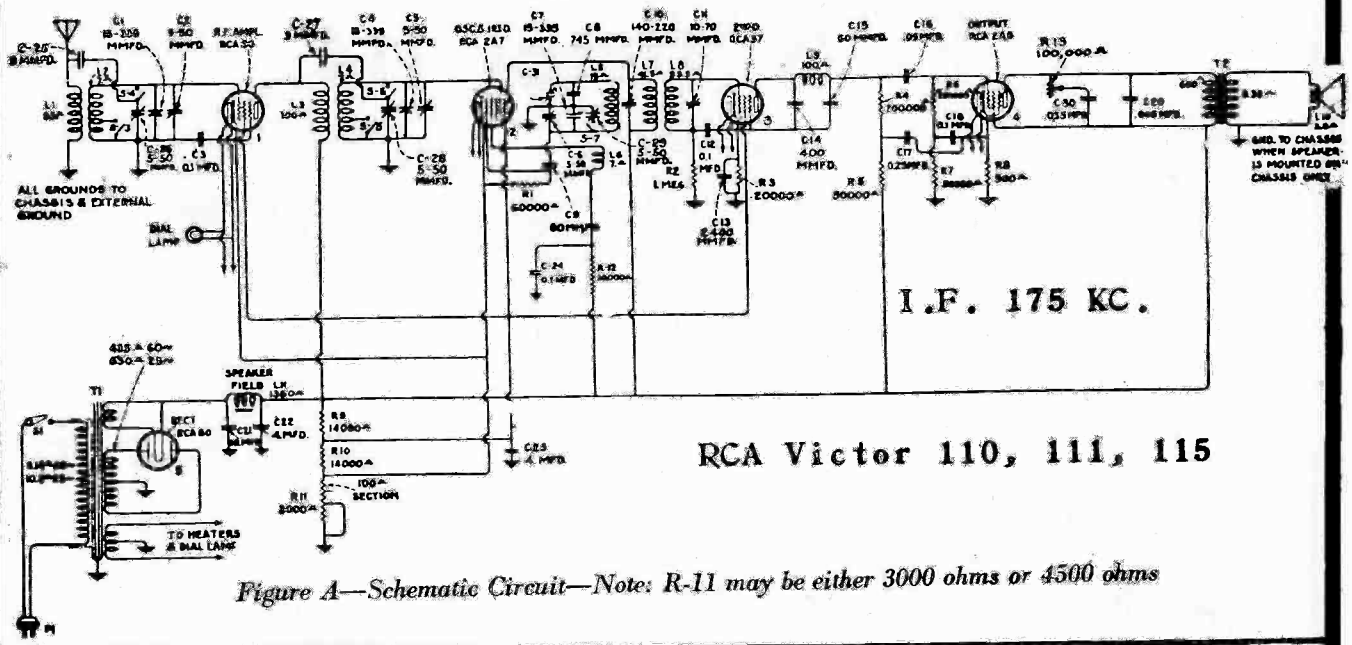

RCA Victor 110, 111, 115

Figure A—Schematic Circuit—Note: R-11 may be either 3000 ohms or 4500 ohms

Radiotron No.		Cathode to Control Grid, Volts D. C.	Cathode to Screen Grid, Volts, D. C.	Cathode to Plate, Volts D. C.	Plate Current, M. A.	Heater or Filament, Volts
RCA-6A7	First Detector	1.25	70	235	2.5	6.3
	Oscillator	—	—	180	3.5	
RCA-6F7	I. F.	1.25	70	235	5.5	6.3
	Second Detector	19	—	145*	0.4	
RCA-41 Output		17	240	230	26.5	6.3
RCA-1-V Rectifier		—	—	335 RMS	50	6.3

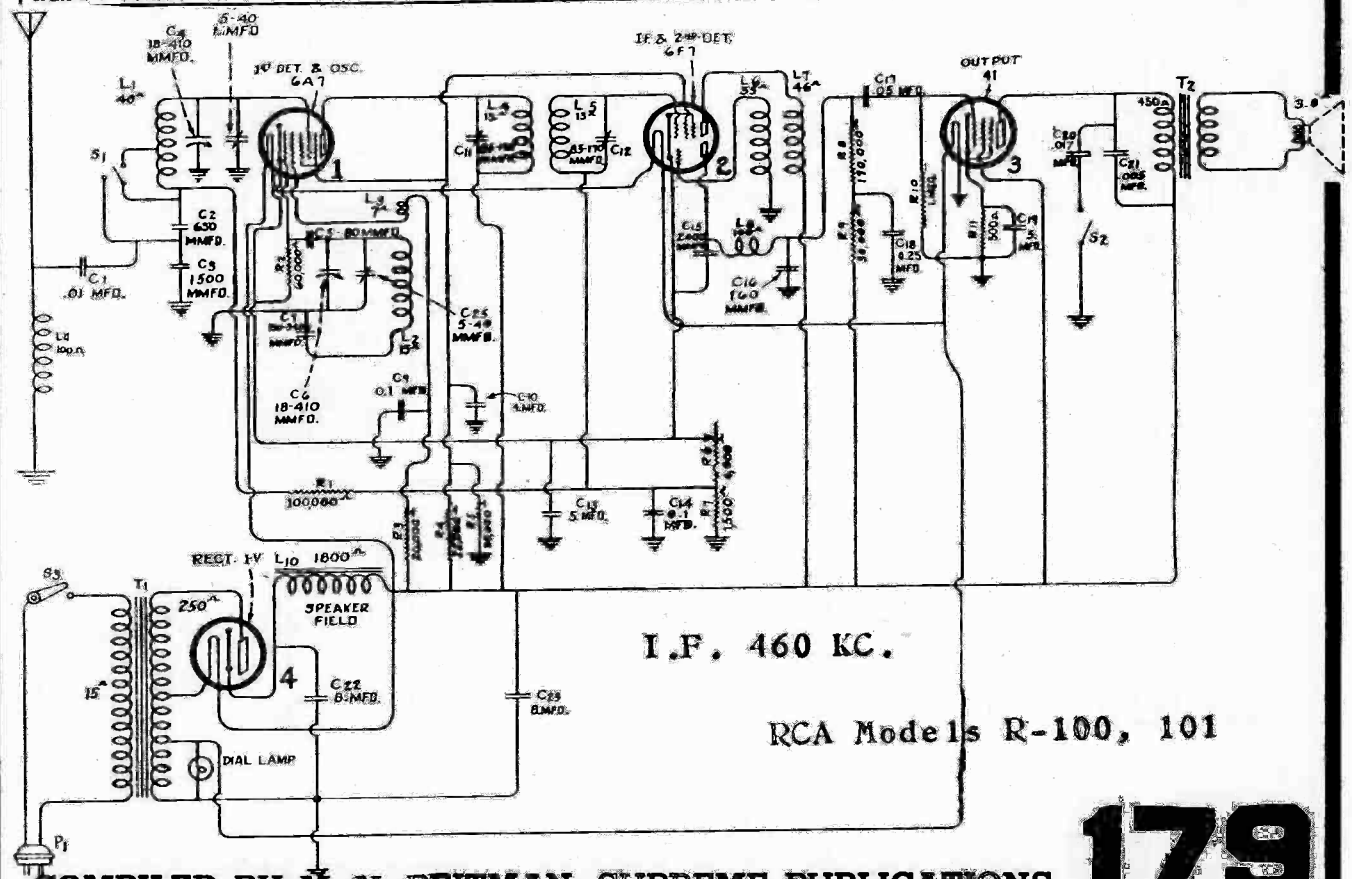

RCA Models R-100, 101

MANUAL OF MOST-OFTEN-NEEDED RADIO DIAGRAMS

RCA Victor 114

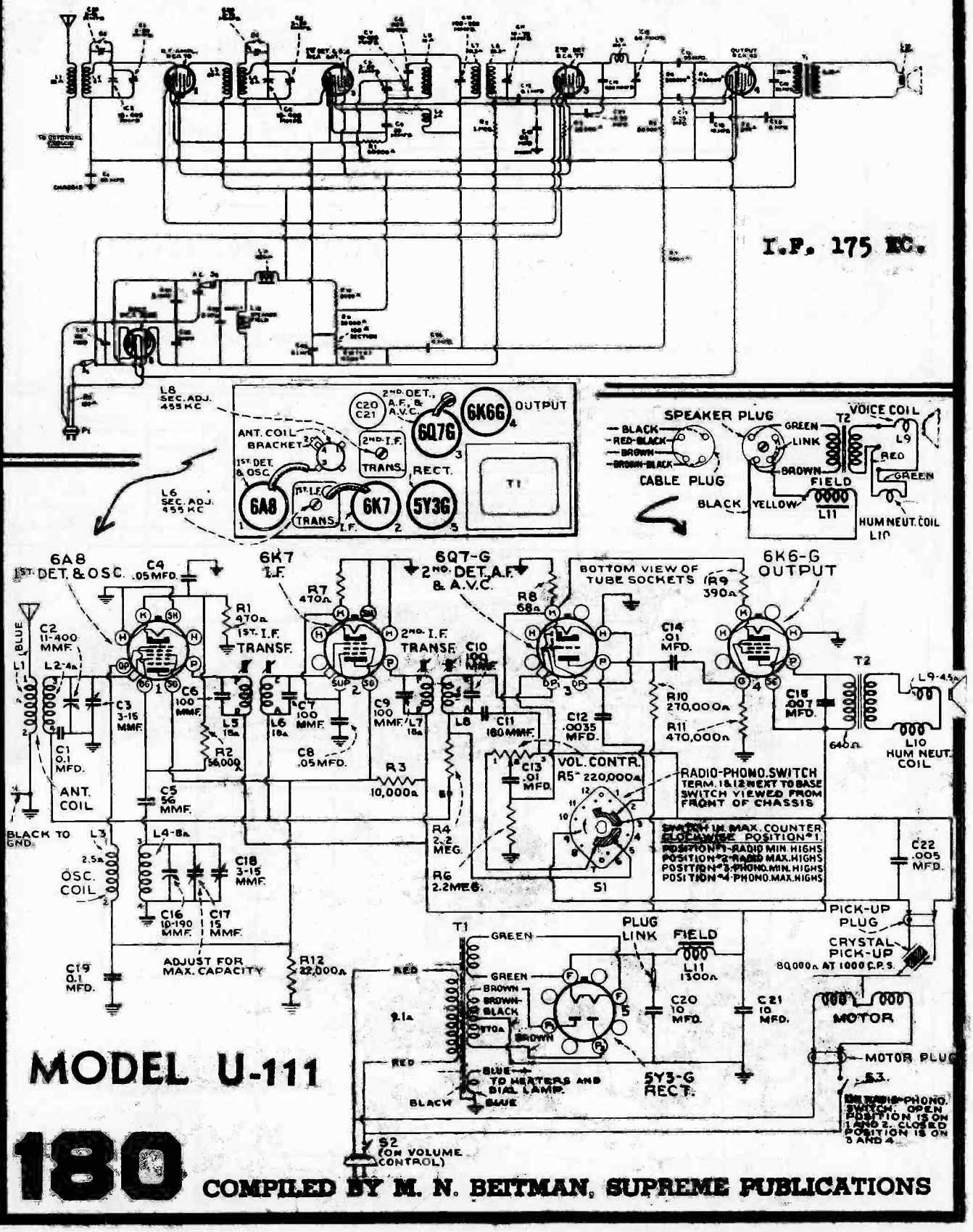

MODEL U-111

180

COMPILED BY M. N. BEITMAN, SUPREME PUBLICATIONS

RCA Victor 120

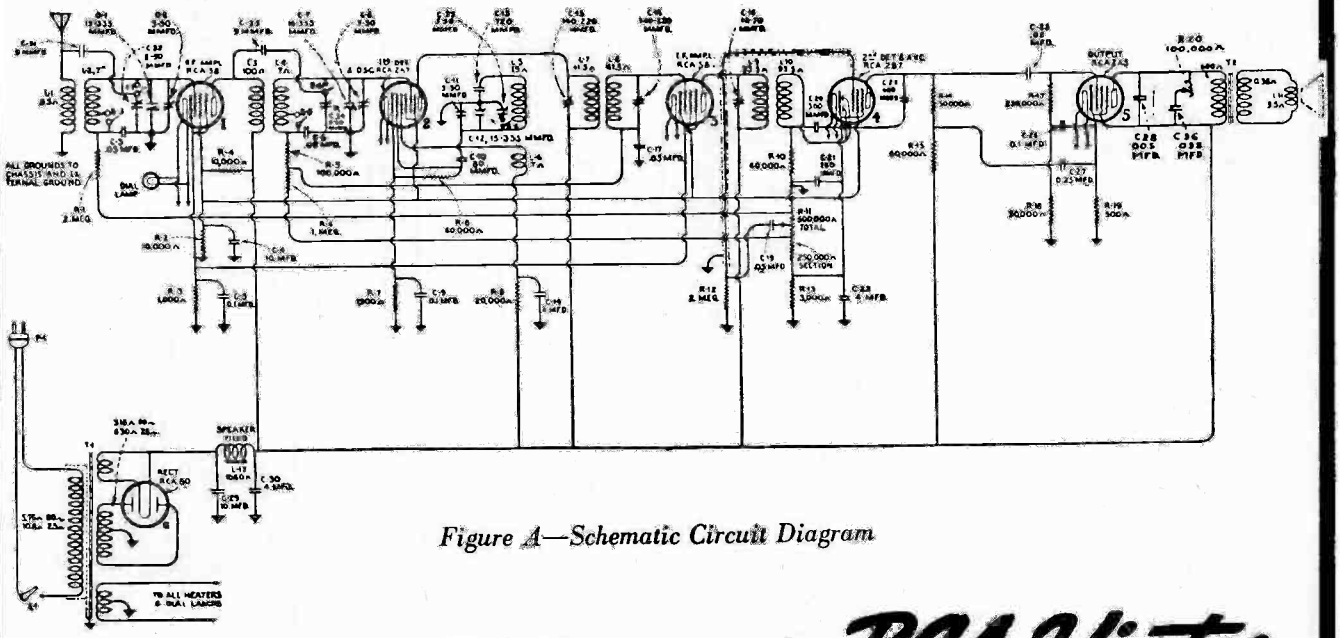

Figure A—Schematic Circuit Diagram

I.F. 175 KC.

RCA Victor

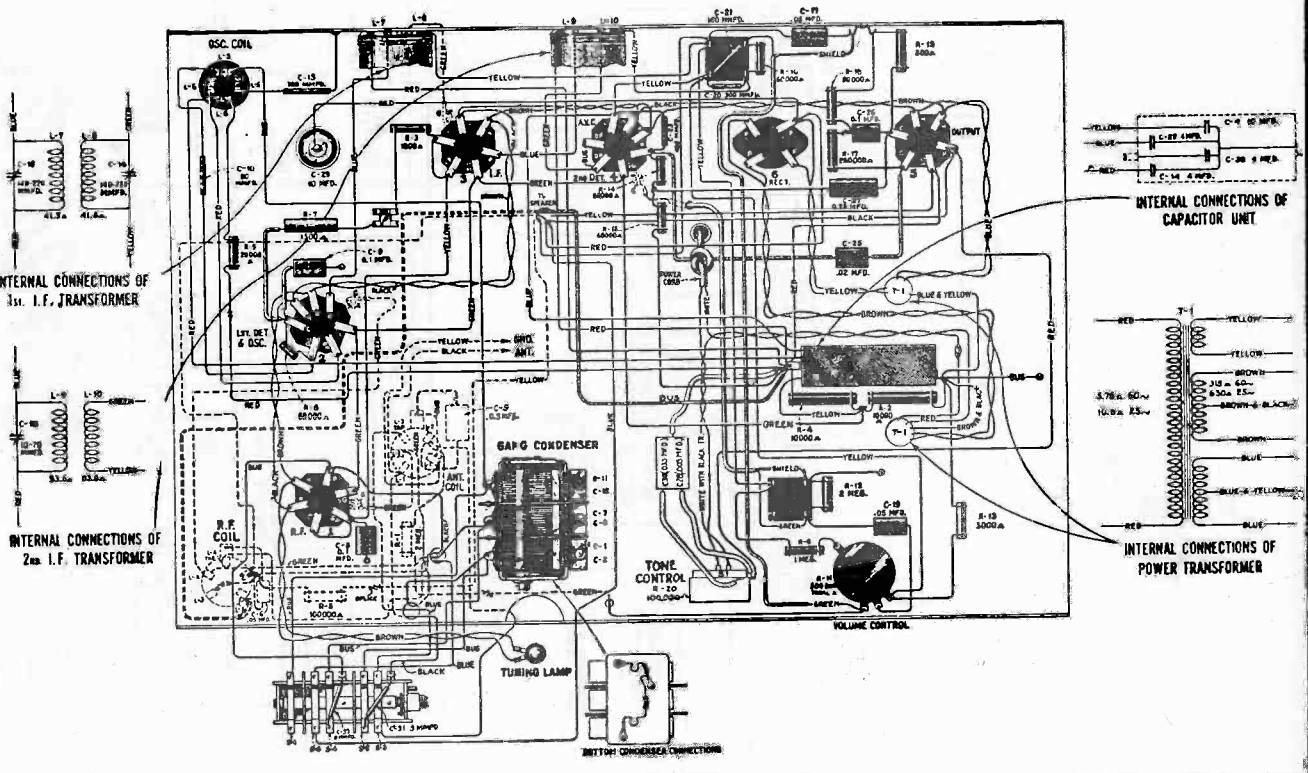

Figure B—Wiring Diagram

MODELS 810K, 810K1, and 810T

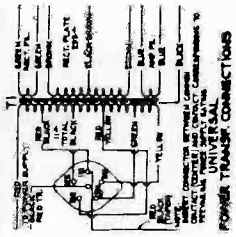

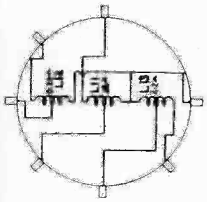

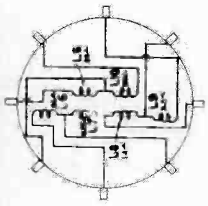

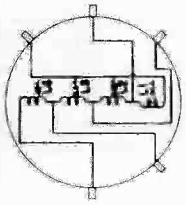

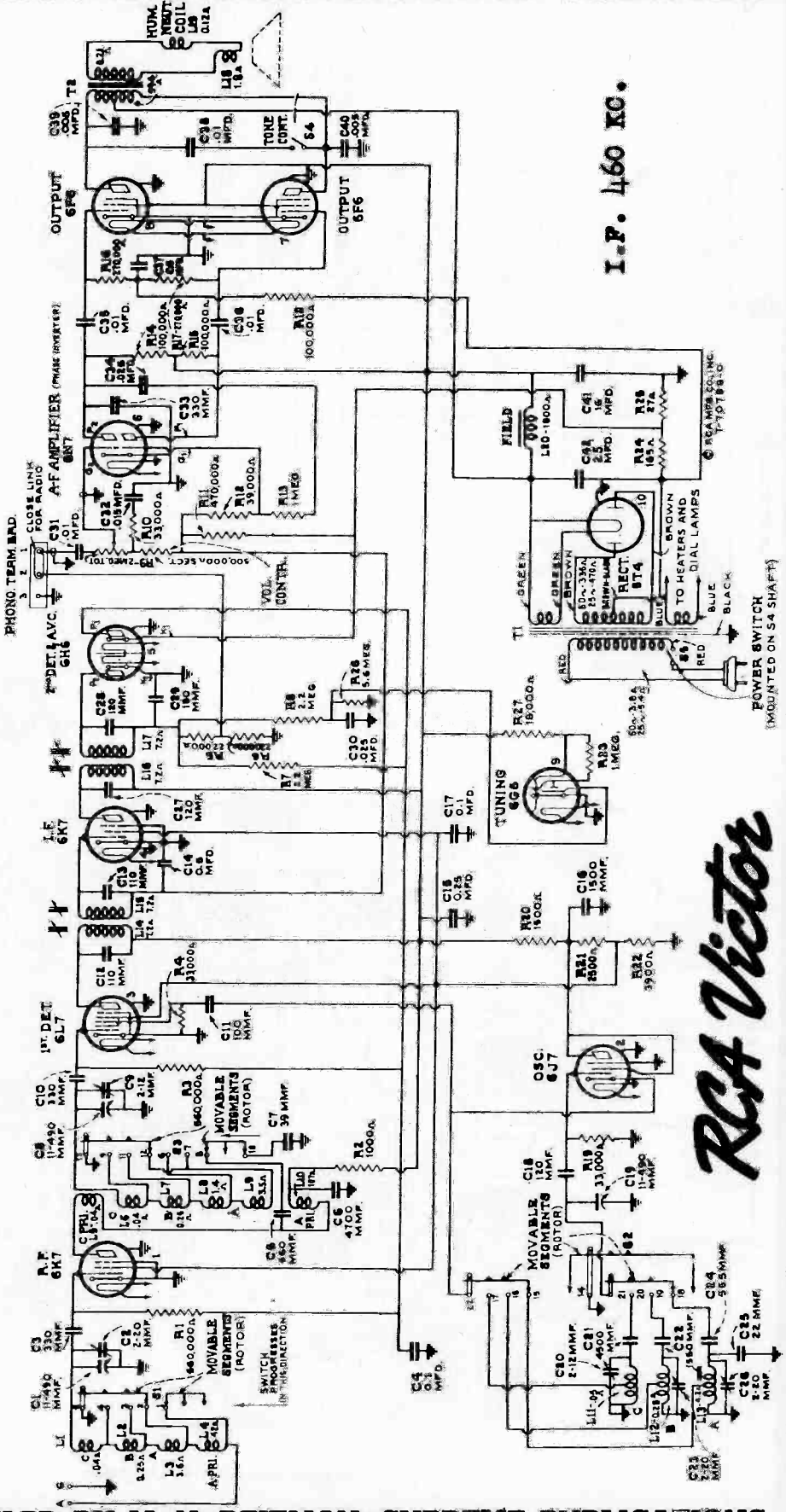

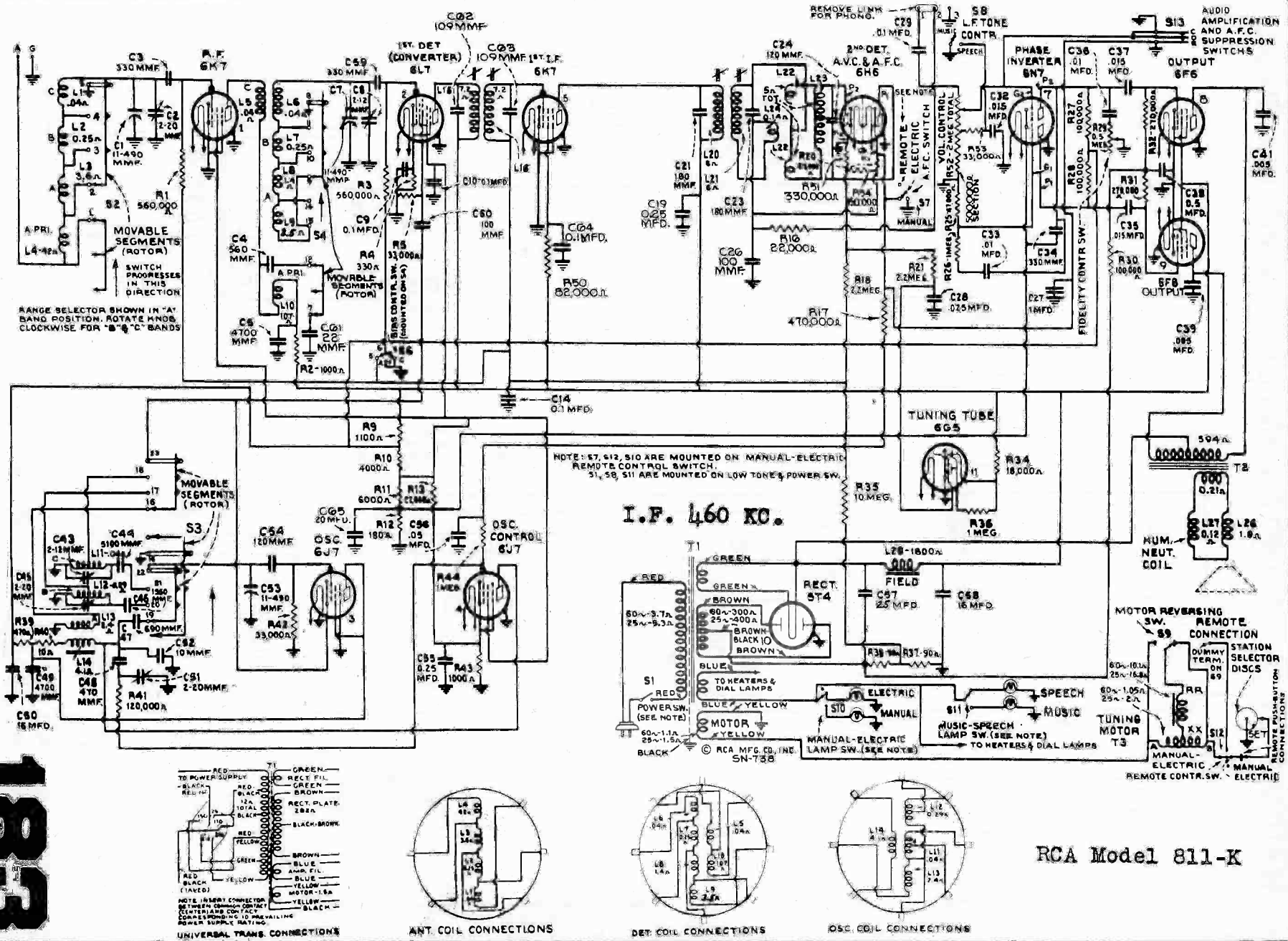

RCA Model 811-K

Sears Roebuck & Co.

MODELS: 1320 1454
(109) 1324 1456
1326X 1531
1386 7004

I.F. 175KC.

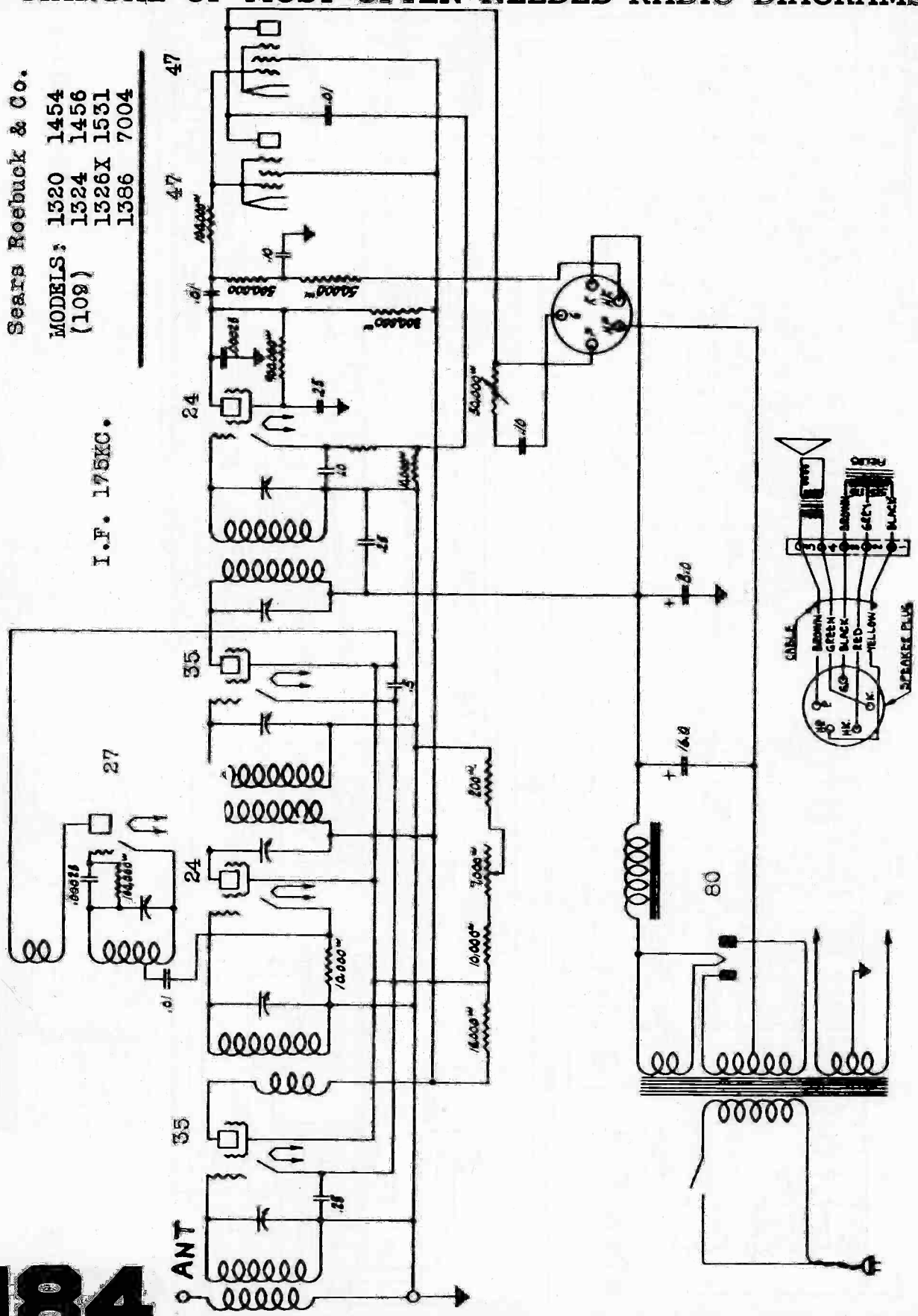

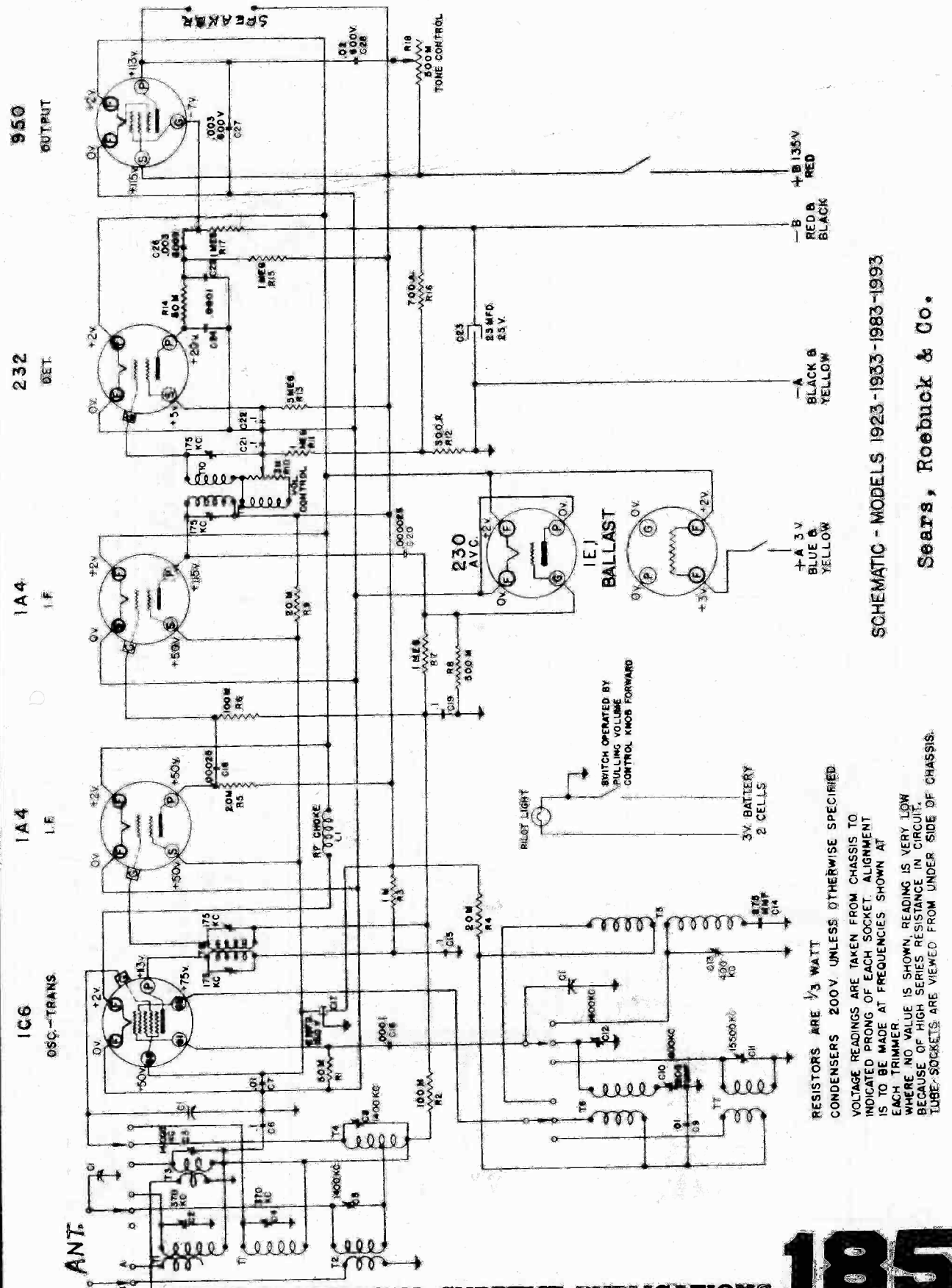
950
OUTPUT
232
DET.
1A4
I.F.
1A4
I.F.
1C6
OSC.-TRANS.
230
AVC.
1E1
BALLAST
SPEAKER
ANT.
TONE CONTROL
VOL. CONTROL
R7 CHOKE
PILOT LIGHT
SWITCH OPERATED BY PULLING VOLUME CONTROL KNOB FORWARD
3V. BATTERY 2 CELLS
+B 135V RED
-B RED & BLACK
-A BLACK & YELLOW
+A 3V BLUE & YELLOW
SCHEMATIC - MODELS 1923-1933-1983-1993
Sears, Roebuck & Co.
RESISTORS ARE 1/3 WATT
CONDENSERS 200V. UNLESS OTHERWISE SPECIFIED
VOLTAGE READINGS ARE TAKEN FROM CHASSIS TO INDICATED PRONG OF EACH SOCKET. ALIGNMENT IS TO BE MADE AT FREQUENCIES SHOWN AT EACH TRIMMER.
WHERE NO VALUE IS SHOWN, READING IS VERY LOW BECAUSE OF HIGH SERIES RESISTANCE IN CIRCUIT.
TUBE-SOCKETS ARE VIEWED FROM UNDER SIDE OF CHASSIS.

Sears Roebuck & Co.

Models: 4414, 4415, 4500, 4505, 4506, 4510, 4511

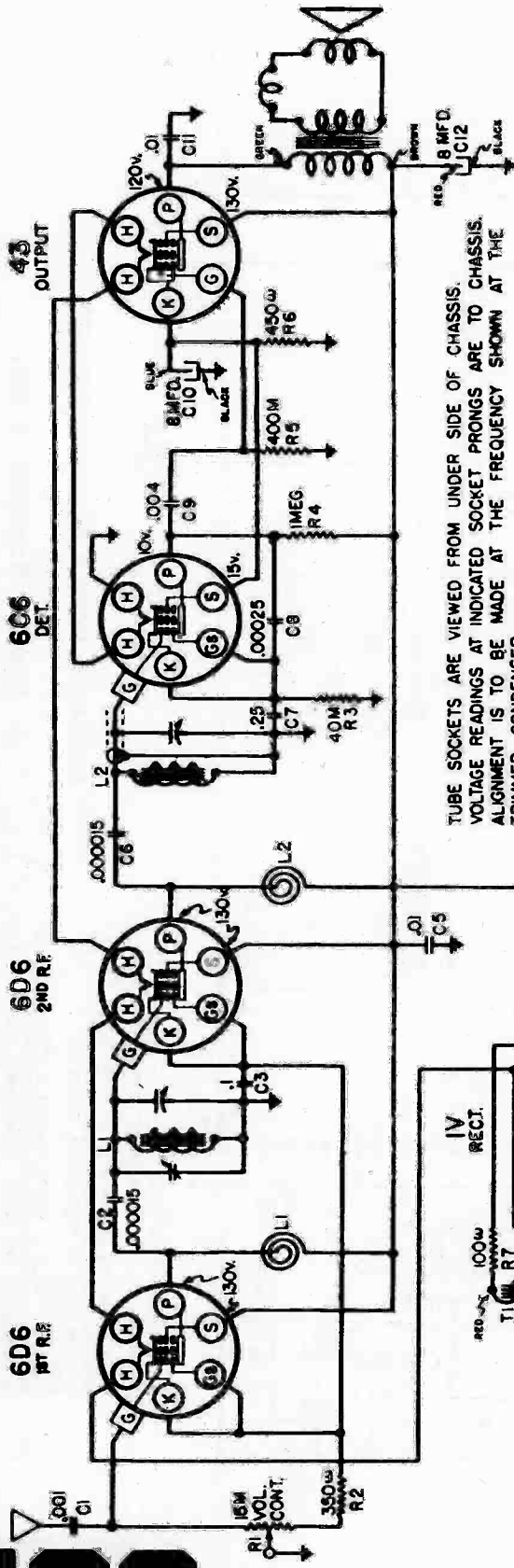

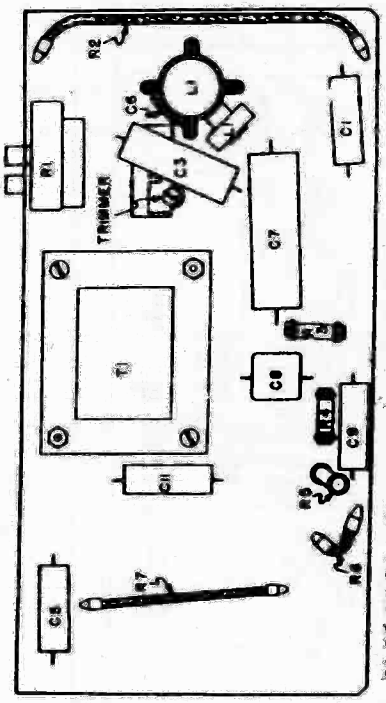

LOCATIONS OF PARTS UNDER CHASSIS

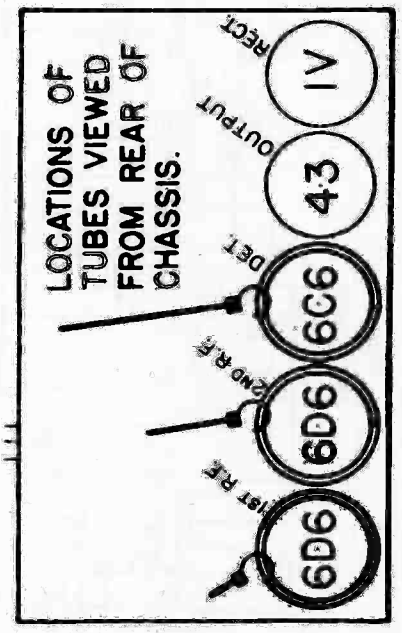

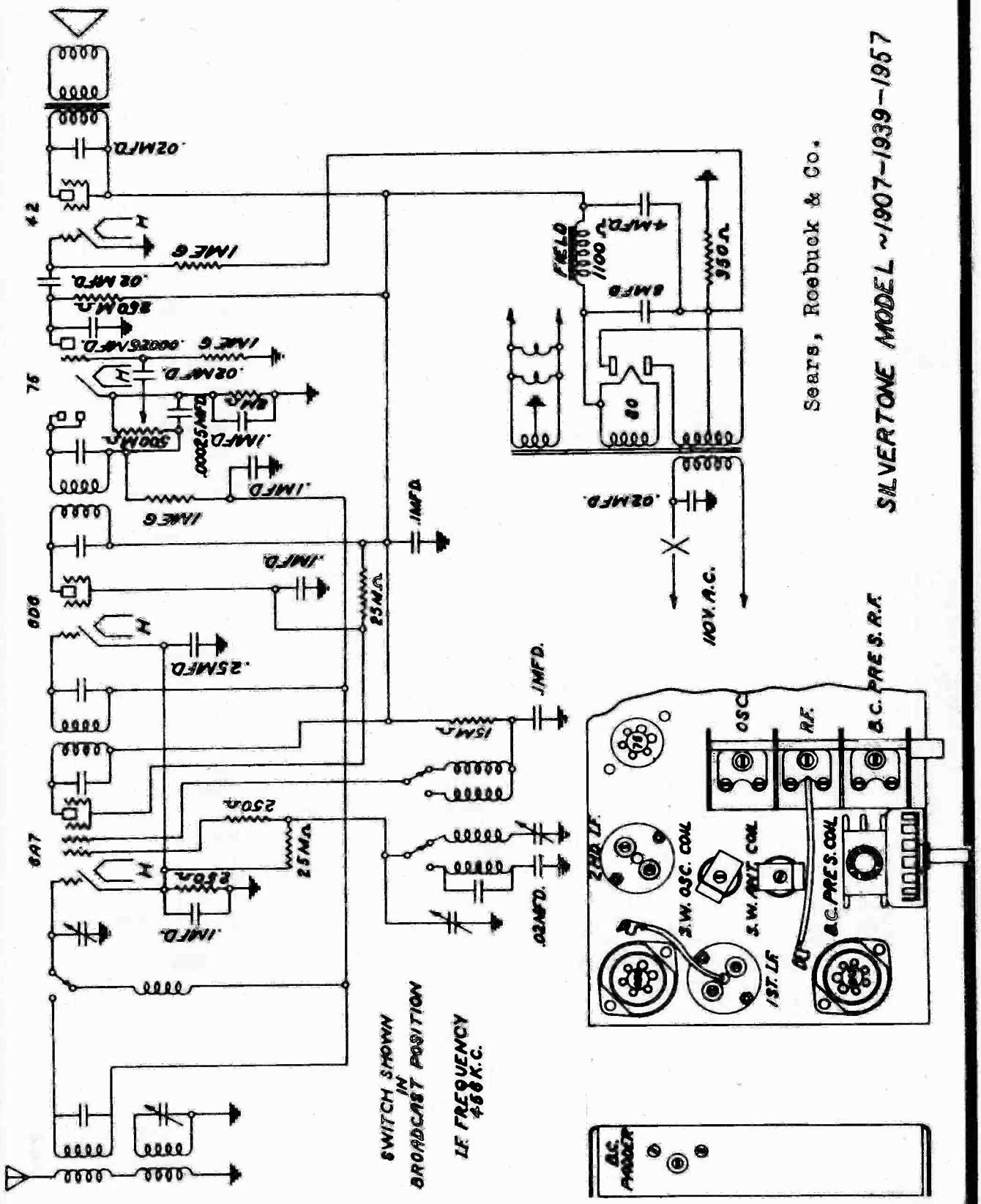
SILVERTONE MODEL ~1907-1939-1957
Sears, Roebuck & Co.
42
76
6D6
6A7
80
FIELD
1100Ω
350Ω
4MFD.
8MFD.
.02MFD.
1MEG
860MΩ
.00025MFD.
500MΩ
1MFD.
25MΩ
250Ω
25KΩ
15MΩ
110V. A.C.
OSC.
R.F.
B.C. PRE S. R.F.
2ND I.F.
S.W. OSC. COIL
S.W. ANT. COIL
B.C. PRE S. COIL
1ST. I.F.
ANT.
A.C. PANEL
SWITCH SHOWN IN BROADCAST POSITION
I.F. FREQUENCY 456 K.C.

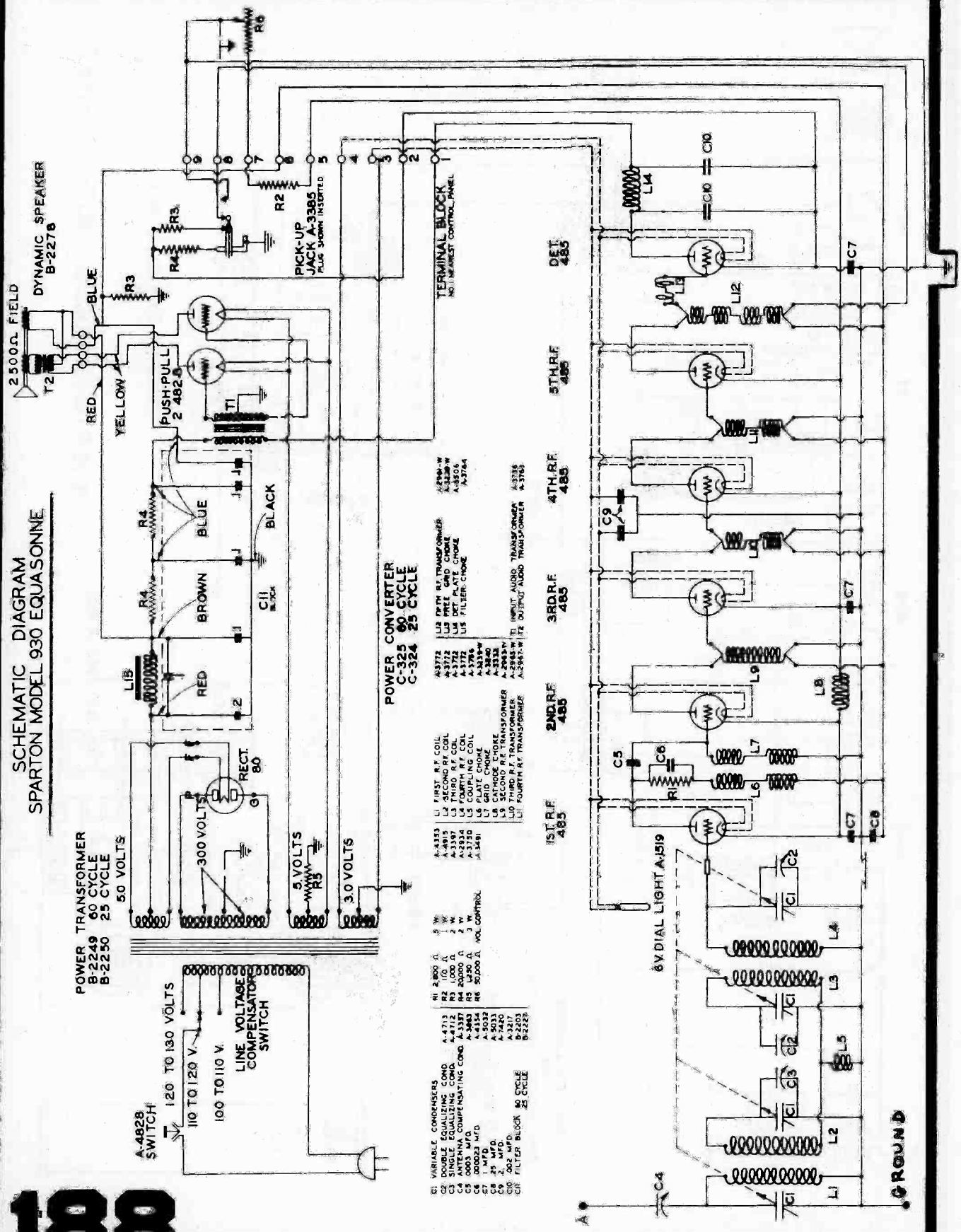
SCHEMATIC DIAGRAM
SPARTON MODEL 930 EQUASONNE
DYNAMIC SPEAKER B-2278
2500Ω FIELD
T2
BLUE
RED
YELLOW
R3
R4
R2
R6
PUSH-PULL 2 482-B
T1
C11 BLOCK
BLACK
BROWN
L18
RECT. 80
300 VOLTS
5 VOLTS
R5
3.0 VOLTS
POWER TRANSFORMER
B-2249 60 CYCLE
B-2250 25 CYCLE
5.0 VOLTS
PICK-UP JACK A-3385
PLUG SHOWN INSERTED
TERMINAL BLOCK
NO. NEAREST CONTROL PANEL
POWER CONVERTER
C-325 60 CYCLE
C-324 25 CYCLE
DET. 485
5TH R.F. 485
4TH R.F. 485
3RD R.F. 485
2ND R.F. 485
1ST R.F. 485
C10
C9
C7
C8
C5
C6
R1
L14
L13
L12
L9
L8
L7
L6
6V. DIAL LIGHT A-1519
C2
C1
C3
C4
L4
L3
L5
L2
L1
A
GROUND
A-4828 SWITCH
120 TO 130 VOLTS
110 TO 120 V.
100 TO 110 V.
LINE VOLTAGE COMPENSATOR SWITCH
C1 VARIABLE CONDENSERS A-4713
C2 DOUBLE EQUALIZING COND. A-4712
C3 SINGLE EQUALIZING COND. A-3387
C4 ANTENNA COMPENSATING COND. A-3483
C5 .00023 MFD. A-4354
C6 .00023 MFD. A-4032
C7 .25 MFD. A-5033
C8 .25 MFD. A-7420
C9 .2 MFD. A-3217
C10 .002 MFD. B-2203
C11 FILTER BLOCK 60 CYCLE B-2229
25 CYCLE
R1 2,800 Ω .5 W.
R2 110 Ω 1 W.
R3 1,000 Ω 2 W.
R4 20,000 Ω 2 W.
R5 1,230 Ω 3 W.
R6 50,000 Ω VOL. CONTROL
L1 FIRST R.F. COIL A-3353
L2 SECOND R.F. COIL A-4913
L3 THIRD R.F. COIL A-3397
L4 FOURTH R.F. COIL A-2934
L5 COUPLING COIL A-3750
L6 PLATE CHOKE A-3491
L7 GRID CHOKE
L8 FILTER CHOKE
L9 SECOND R.F. TRANSFORMER
L10 THIRD R.F. TRANSFORMER
L11 FOURTH R.F. TRANSFORMER
L12 FIFTH R.F. TRANSFORMER A-3772
L13 FIFTH R.F. CHOKE A-3772
L14 FIFTH R.F. PLATE CHOKE A-3772
L15 FILTER CHOKE A-3786
A-2939-W
A-3330
A-3340
A-3331
A-2943-W
A-2945-W
A-2947-W
T1 INPUT AUDIO TRANSFORMER A-3736
T2 OUTPUT AUDIO TRANSFORMER A-3763
A-2941-W
A-3320-W
A-3330
A-3764

Sparton Radio
Sparks-Withington Co.
Models: 591, 593, 931 AC

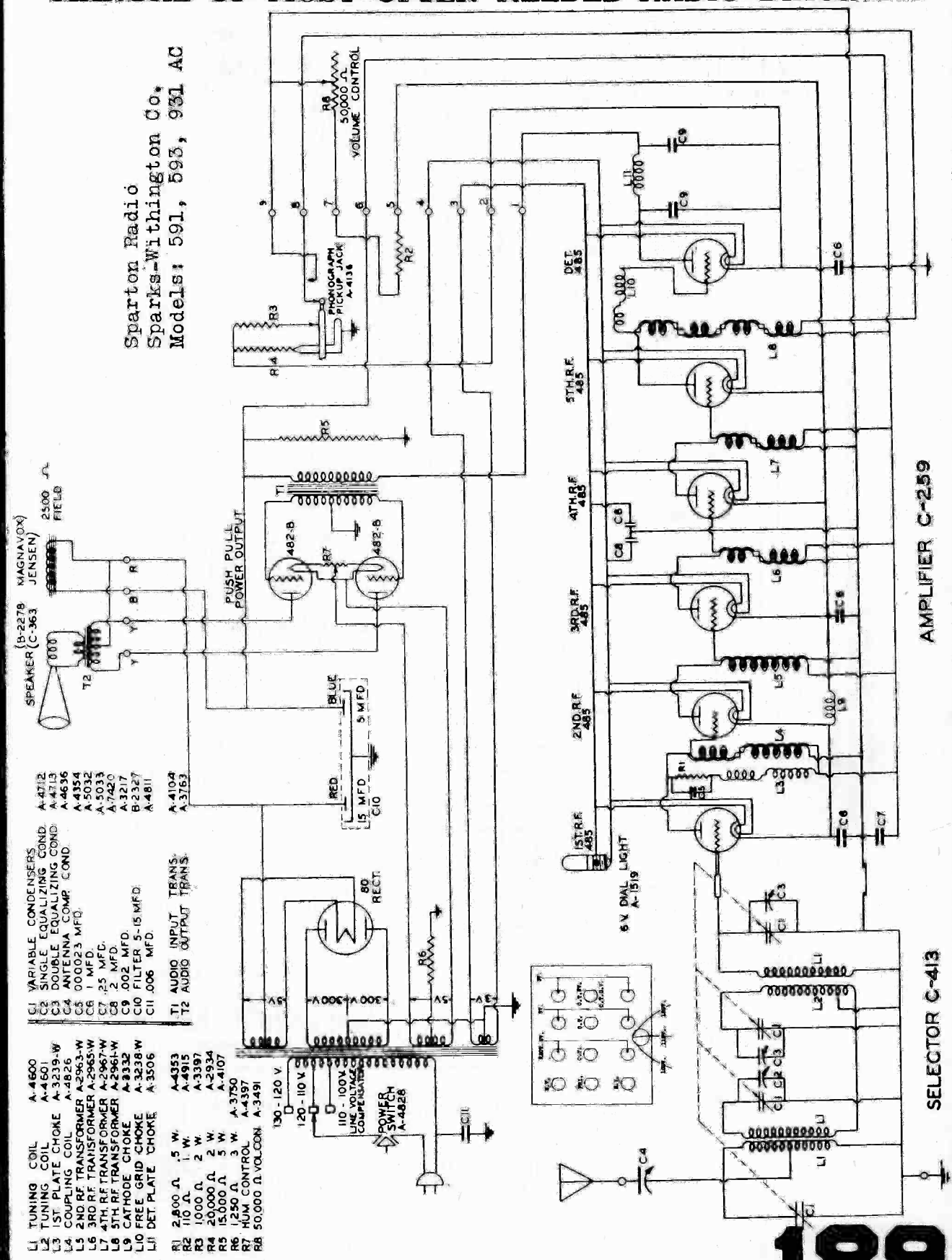

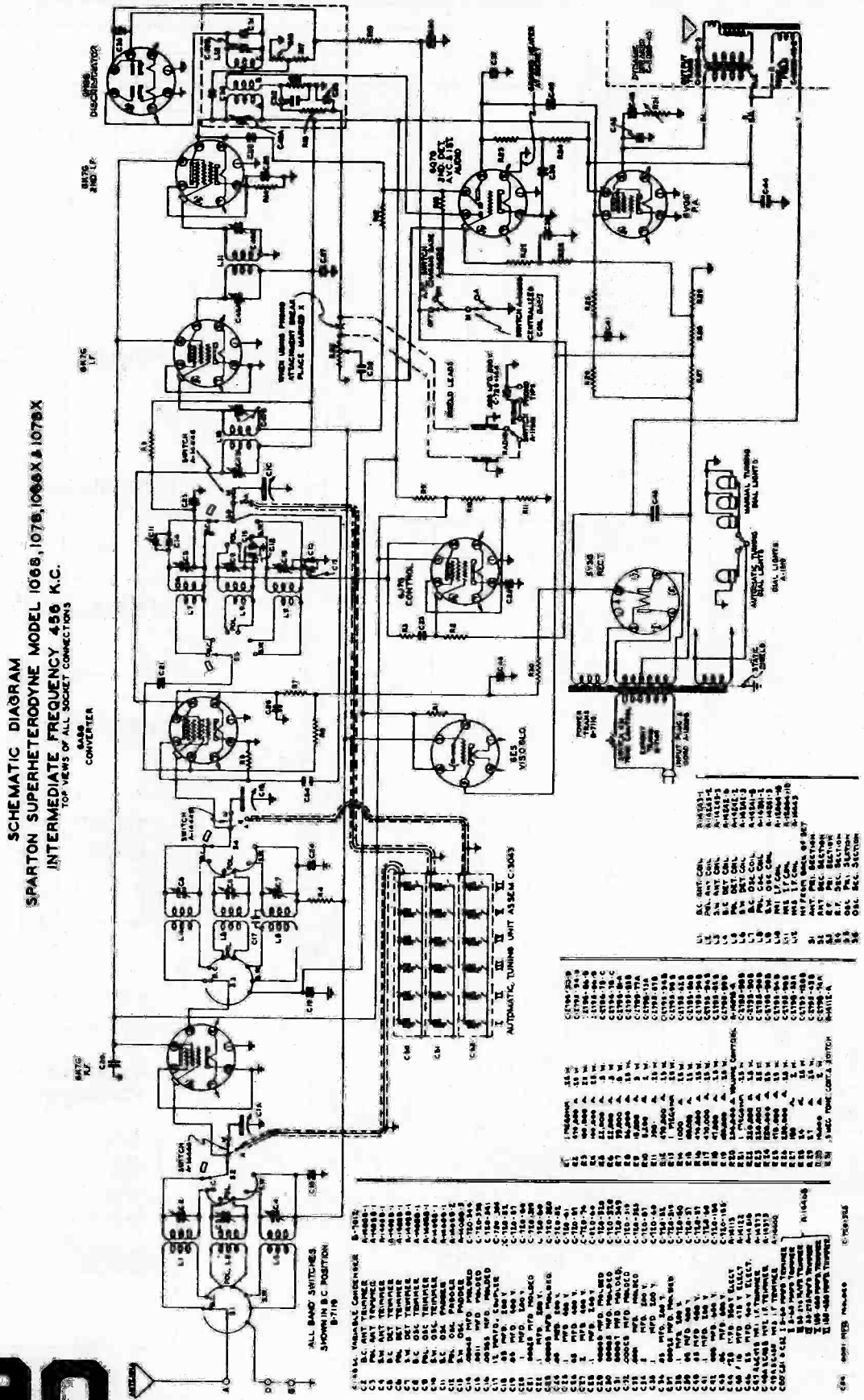
SCHEMATIC DIAGRAM
SPARTON SUPERHETERODYNE MODEL 1068, 1078, 1068X & 1078X
INTERMEDIATE FREQUENCY 456 K.C.
TOP VIEWS OF ALL SOCKET CONNECTIONS
6A8 CONVERTER
6B7 2ND I.F.
6B7 I.F.
6B7 R.F.
6C6 DISCRIMINATOR
6C5 VISTOR.C.
6J7 CONTROL
6Q7 2ND DET. A.V.C. 1ST AUDIO
6V6 P.A.
5Y3G RECT.
ALL BAND SWITCHES SHOWN IN B.C. POSITION
AUTOMATIC TUNING UNIT ASSEM. C-1063
MANUAL TUNING BALL LIGHTS
AUTOMATIC TUNING BALL LIGHTS
BALL LIGHTS A-1189
POWER TRANS. P-1116
INPUT PLUG A-1060
SPEAKER
ANTENNA

SCHEMATIC DIAGRAM
SPARTON SUPERHETERODYNE MODEL 518, 518X, 558 & 558X 568
INTERMEDIATE FREQUENCY 456 K.C.

TOP VIEW OF ALL SOCKET CONNECTIONS

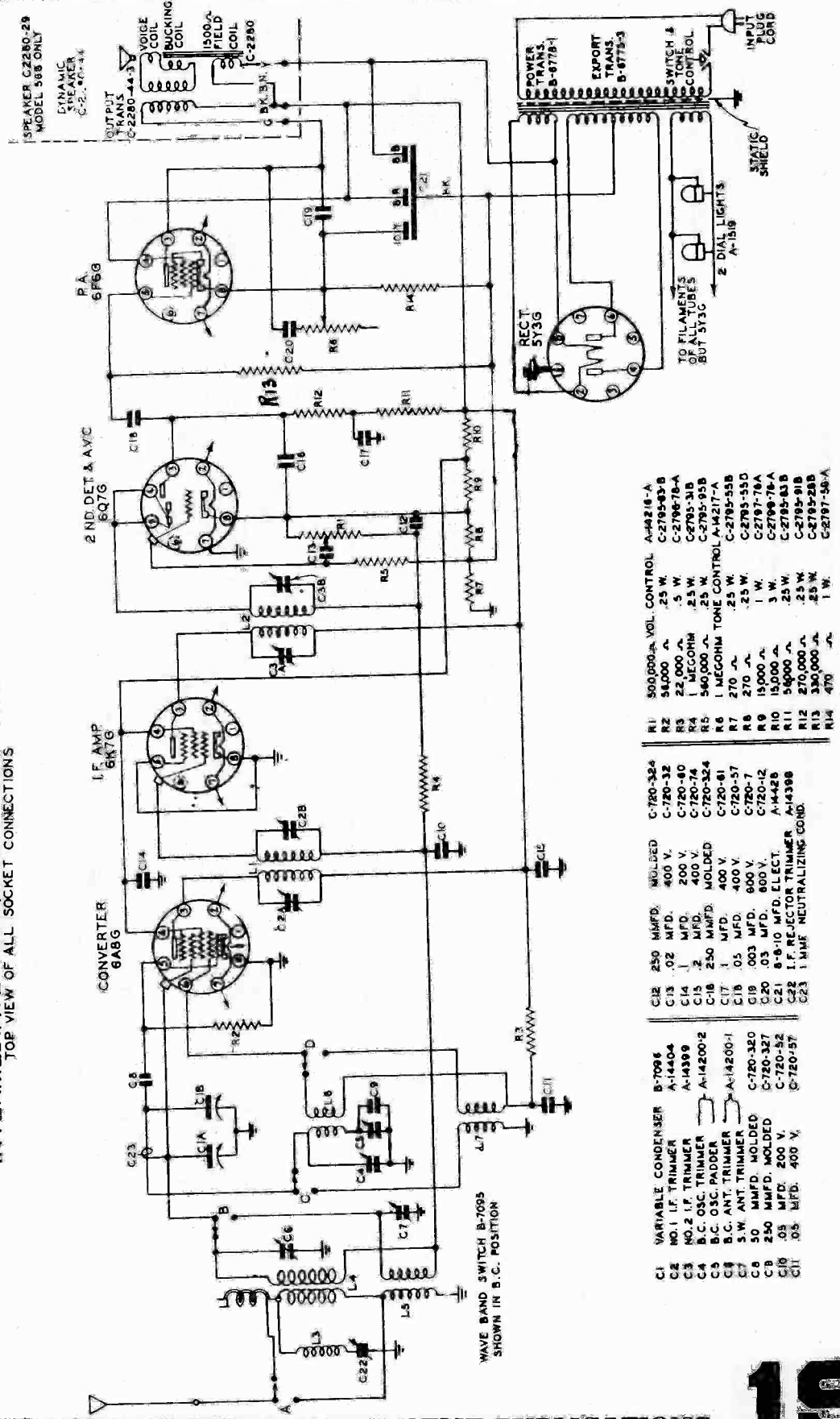

| | | |

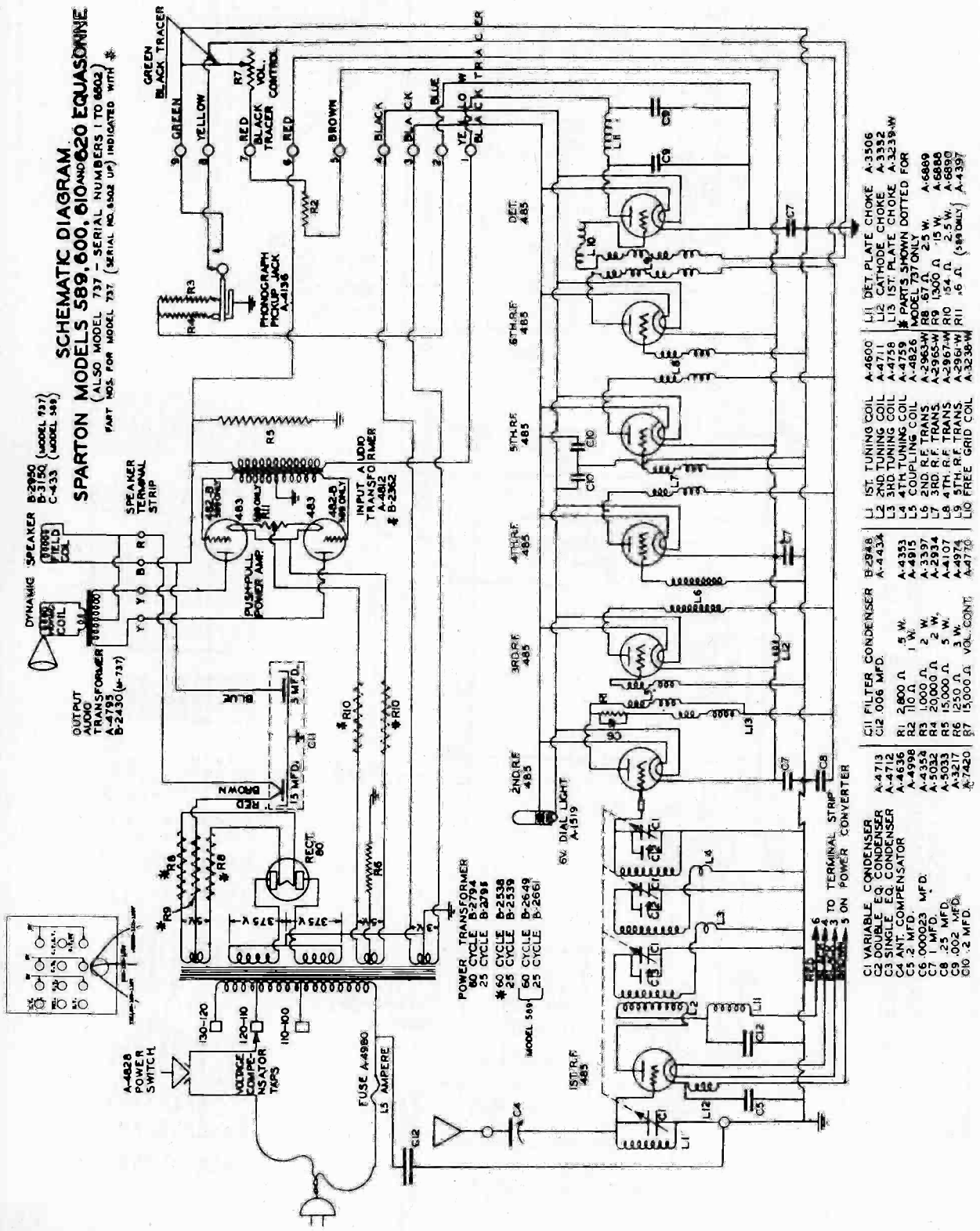
SCHEMATIC DIAGRAM
SPARTON MODELS 589, 600, 610 AND 620 EQUASONNE
(ALSO MODEL 737 - SERIAL NUMBERS 1 TO 6502)
PART NOS. FOR MODEL 737 (SERIAL NO. 6502 UP) INDICATED WITH *
DYNAMIC SPEAKER
FIELD COIL
VOICE COIL
B-2950 (MODEL 737)
B-3150 (MODEL 589)
C-433
SPEAKER TERMINAL STRIP
OUTPUT AUDIO TRANSFORMER
A-4793
B-2430 (M-737)
PUSH-PULL POWER AMP.
INPUT AUDIO TRANSFORMER
A-4812
B-2362
PHONOGRAPH PICKUP JACK
A-4136
VOL. CONTROL
GREEN
BLACK TRACER
YELLOW
RED
BROWN
BLACK
BLUE
YELLOW
BLACK TRACER
RECT. 80
POWER TRANSFORMER
50 CYCLE B-2794
25 CYCLE B-2795
*60 CYCLE B-2538
25 CYCLE B-2539
MODEL 589 60 CYCLE B-2649
25 CYCLE B-2661
6V. DIAL LIGHT
A-1519
1ST R.F. 485
2ND R.F. 485
3RD R.F. 485
4TH R.F. 485
5TH R.F. 485
6TH R.F. 485
DET. 485
A-4828 POWER SWITCH
VOLTAGE COMPENSATOR TAPS
FUSE A-4980
1.5 AMPERE
TO TERMINAL STRIP ON POWER CONVERTER
C1 VARIABLE CONDENSER A-4713
C2 DOUBLE EQ. CONDENSER A-4712
C3 SINGLE EQ. CONDENSER A-4636
C4 ANT. COMPENSATOR A-4998
C5 .2 MFD. A-4336
C6 .000023 MFD. A-4332
C7 .1 MFD. A-3013
C8 .25 MFD. A-3217
C9 .002 MFD. A-7420
C10 .2 MFD.
C11 FILTER CONDENSER B-2948
C12 .006 MFD. A-4434
R1 2,800 Ω 5 W. A-4353
R2 100 Ω 1 W. A-4915
R3 1,000 Ω 2 W. A-3397
R4 20,000 Ω 2 W. A-2934
R5 15,000 Ω 3 W. A-4107
R6 1250 Ω 3 W. A-4974
R7 15,000 Ω VOL. CONT. A-4770
L1 1ST. TUNING COIL A-4600
L2 2ND TUNING COIL A-4711
L3 3RD TUNING COIL A-4758
L4 4TH TUNING COIL A-4759
L5 COUPLING COIL A-4826
L6 2ND R.F. TRANS. A-2963-W
L7 3RD R.F. TRANS. A-2965-W
L8 4TH R.F. TRANS. A-2967-W
L9 5TH R.F. TRANS. A-2961-W
L10 FREE GRID COIL A-3238-W
L11 DET. PLATE CHOKE A-3506
L12 CATHODE CHOKE A-3332
L13 1ST. PLATE CHOKE A-3239-W
* PARTS SHOWN DOTTED FOR MODEL 737 ONLY
R8 .67 Ω 2.5 W. A-6869
R9 1,300 Ω .15 W. A-6888
R10 .54 Ω 2.5 W. A-6890
R11 .6 Ω (589 ONLY) A-4397

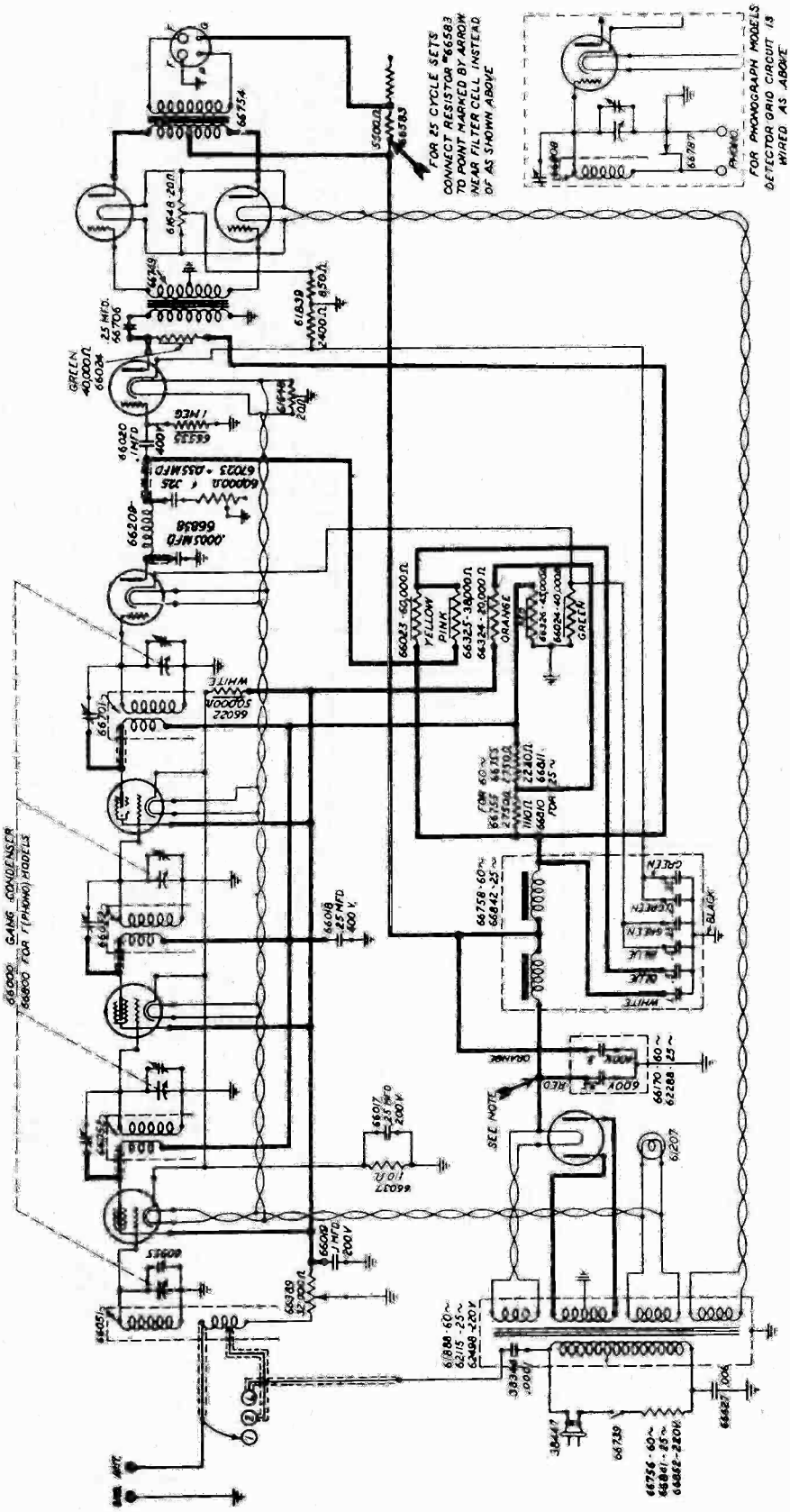

Stewart-Warner Model R-100-A, B, and E, Alternating Current Sets

STEWART-WARNER MODEL 1121 AUTO RADIO (112 CHASSIS)

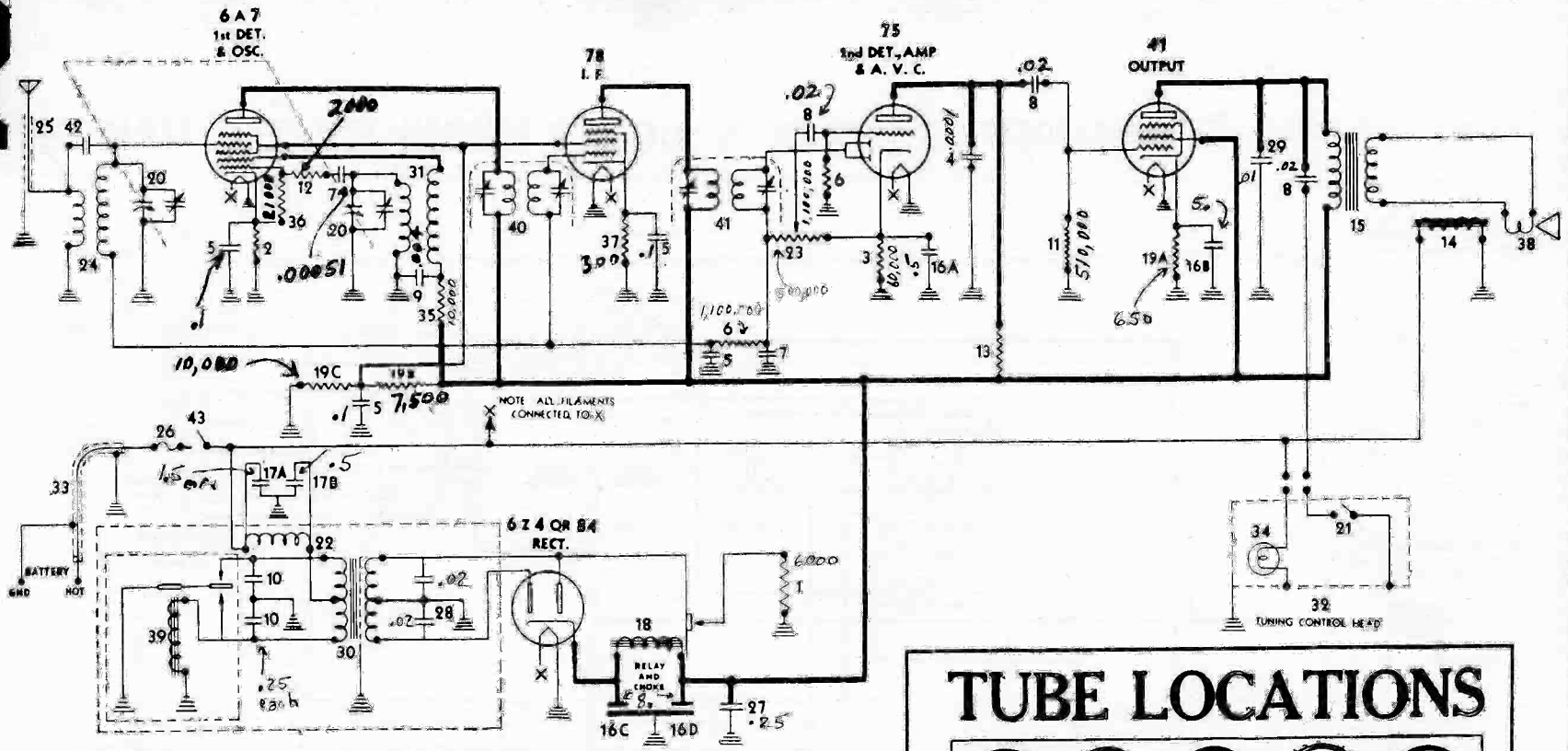

Tube Type	Position In Circuit	Filament Voltage	Plate Voltage	Screen Grid Voltage	Cathode (Bias) Voltage
6A7	1st Det. and Osc.	5.5	144	70	1.4
78	I. F.	5.5	144	70	2.0
75	2nd Det.	5.5	60	—	1.0
41	Output	5.5	142	144	9.0
84	Rect.	5.5	—	—	179

TUBE LOCATIONS

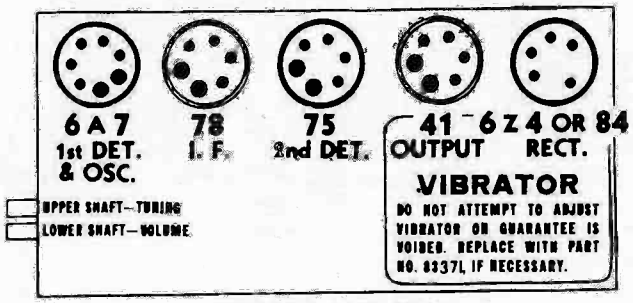

I. F. FREQUENCY 456 K.C.

Circuit Data of Stewart-Warner Models R-102-A, B & E.*

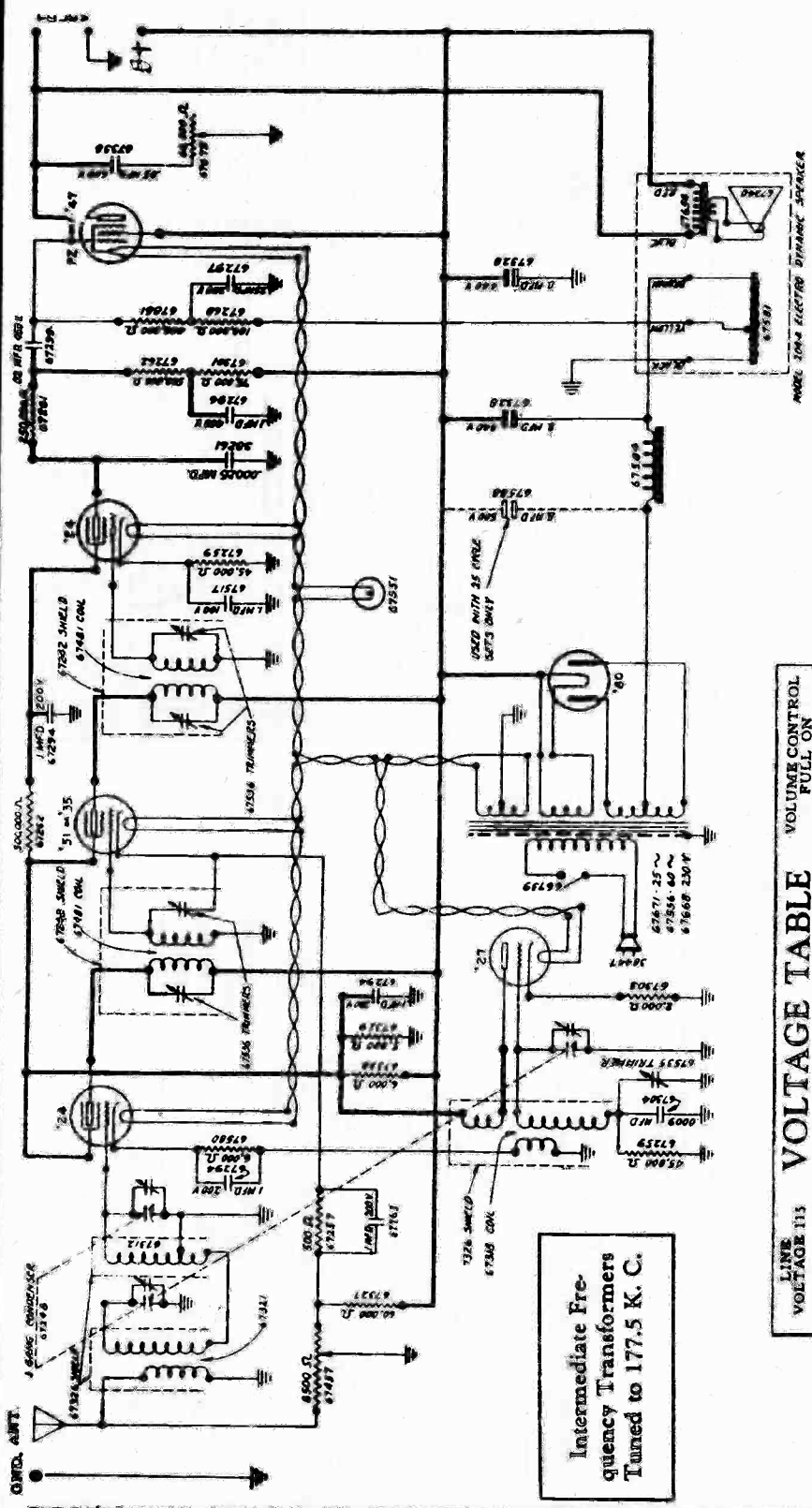

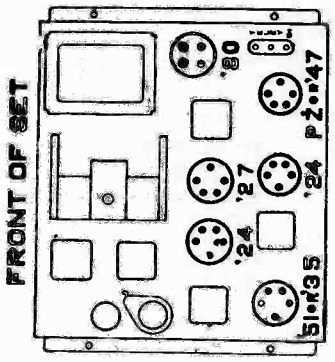

TUBE LOCATIONS

LINE VOLTAGE 115 — **VOLTAGE TABLE** — VOLUME CONTROL FULL ON

Type of Tube	Tube Circuit	Filament Voltage	Plate Voltage	Screen Grid Voltage	Bias Voltage
'24	1st Det.	2.45	250	95	6.5
'27	Osc.	2.45	95		9
'51	I. F.	2.40	250	95	3
'24	2nd Det.	2.45	70	30	7
P. Z. or '47	Output	2.45	230	250	15 ‡
'80	Rect.	4.8	170		

All D. C. voltages measured with respect to ground, using high resistance voltmeter of 1000 ohms per volt. Readings will vary, depending upon voltage range of meter, being higher for higher range instruments. This variation is most marked for second detector screen grid and plate voltages.

‡ This reading obtained between ground and yellow speaker lead. Direct reading from grid to ground or reading taken with a set tester will show about 3 volts because of high resistance in grid circuit.

STEWART-WARNER MODEL R-136 CHASSIS (RECEIVER MODELS 1361 to 1369)

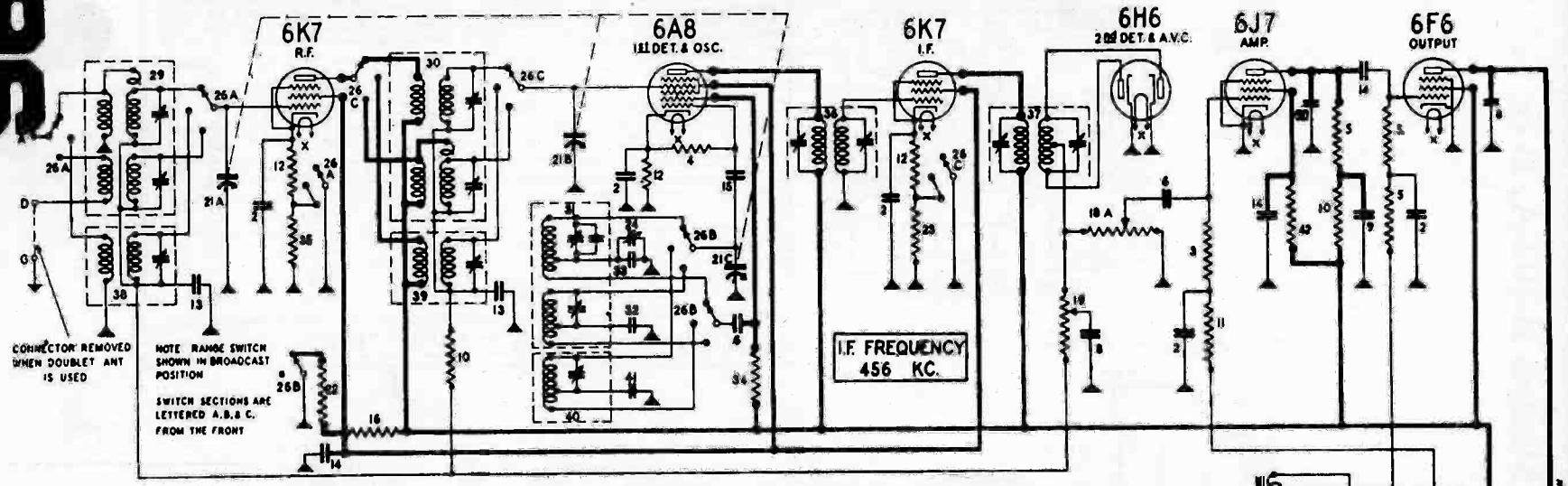

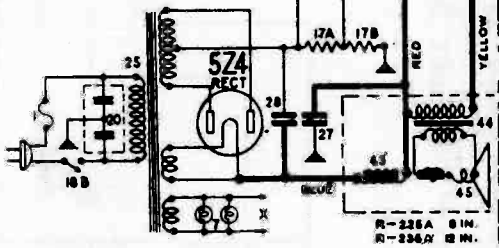

SOCKET VOLTAGES

LINE VOLTAGE 115 VOLTS Volume Control on Full — ANTENNA GROUNDED
RANGE SWITCH SET ON BROADCAST POSITION — DIAL TUNED TO 540 KC.

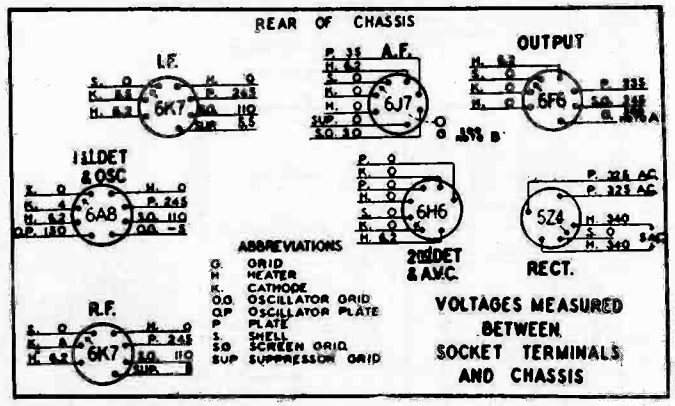

IMPORTANT: Use a high resistance meter of 1000 ohms per volt.
NOTE A: The grid bias on the 6F6 output tube is —16.5 volts, measured across the resistors 17A and 17B.
NOTE B: The grid bias on the 6J7 amplifier tube is —1.7 volts measured across resistor 17B.
Speaker field resistance is 1300 ohms with coil warm.

R-136 PARTS LIST

Diagram No.	Part No.	DESCRIPTION
1	38841	Fuse, 1 amp.
2	81630	.1 mfd. 175 volt paper condenser
3	83072	510,000 ohm ¼ watt carbon resistor
4	83080	51,000 ohm ¼ watt carbon resistor
5	83082	260,000 ohm ¼ watt carbon resistor
6	83219	.01 mfd. 600 volt paper condenser
7	83278	Dial lamp 6.3 volt
8	83706	.006 mfd. 600 volt paper condenser
9	83974	.1 mfd. 200 volt paper condenser
10	84198	110,000 ohm ¼ watt carbon resistor
11	84235	1.1 megohm ¼ watt carbon resistor
	84312	Output transformer (R-225-A 8" spkr.)
	84504	Diaphragm and shell assembly (R-225-A 8 inch speaker)
	84505	Field coil assembly (R-225-A 8" spkr.)
12	84888	300 ohm ½ watt wire wound resistor
13	85053	.05 mfd. 100 volt paper condenser
14	85059	.05 mfd. 300 volt paper condenser
15	85061	.000051 mfd. mica condenser
16	85063	15,000 ohm 2 watt carbon resistor
17-A, 17-B	85067	275 ohm wire wound bias resistor; 25 ohm wire wound bias resistor — one unit
18-A, 18-B	85073	250,000 ohm volume control; Line switch — one unit
19	85074	500,000 ohm tone control
20	85075	Dual .01 mfd. 750 volt A.C. paper cond.
21A to C	85084	3 Gang variable condenser
22	85116	25,000 ohm ½ watt carbon resistor
23	85117	1,000 ohm ½ watt carbon resistor
24	85285	Padding trimmer
25	85428	Power trans. 115 V 60 cycle (136-A only) (See 85760 for other voltages and frequencies)
26A to C	85429	Three deck range switch
27	85430	16 mfd. 300 volt electrolytic condenser
28	85431	16 mfd. 400 volt electrolytic condenser
29	85432	Antenna coil and shield assembly (B & No. 3 S.W.)
30	85433	R. F. coil and shield assembly (B & No. 3 S.W.)
31	85434	Oscillator coil and shield assembly (B & No. 3 S.W.)
32	85440	.00351 mfd. mica condenser
33	85441	.00042 mfd. mica condenser
34	85442	21,000 ohm ½ watt carbon resistor
35	85443	2,000 ohm ½ watt carbon resistor
36	85452	1st I.F. transformer
37	85453	2nd I.F. transformer
38	85455	Antenna coil assembly (No. 2 S.W.)
39	85456	R.F. coil assembly (No. 2 S.W.)
40	85457	Oscillator coil assembly (No. 2 S.W.)
41	85467	.00137 mfd. mica condenser
42	85472	1.6 megohm ¼ watt carbon resistor
43	85478	Field coil assembly (R-236-A spkr.) (See 84505 for R-225-A 8" spkr.)
44	85482	Output transformer (R-236-A 12" spkr.) (See 84312 on R-225-A 8" spkr.)
45	85592	Diaphragm and shell assembly (R-236-A 12" spkr.) (See 84504 for R-225-A 8 inch speaker)
50	84370	.00011 mfd. mica condenser

COMPILED BY M. N. BEITMAN, SUPREME PUBLICATIONS

STEWART-WARNER MODEL R-134 CHASSIS (RECEIVER MODELS 1341 to 1349)

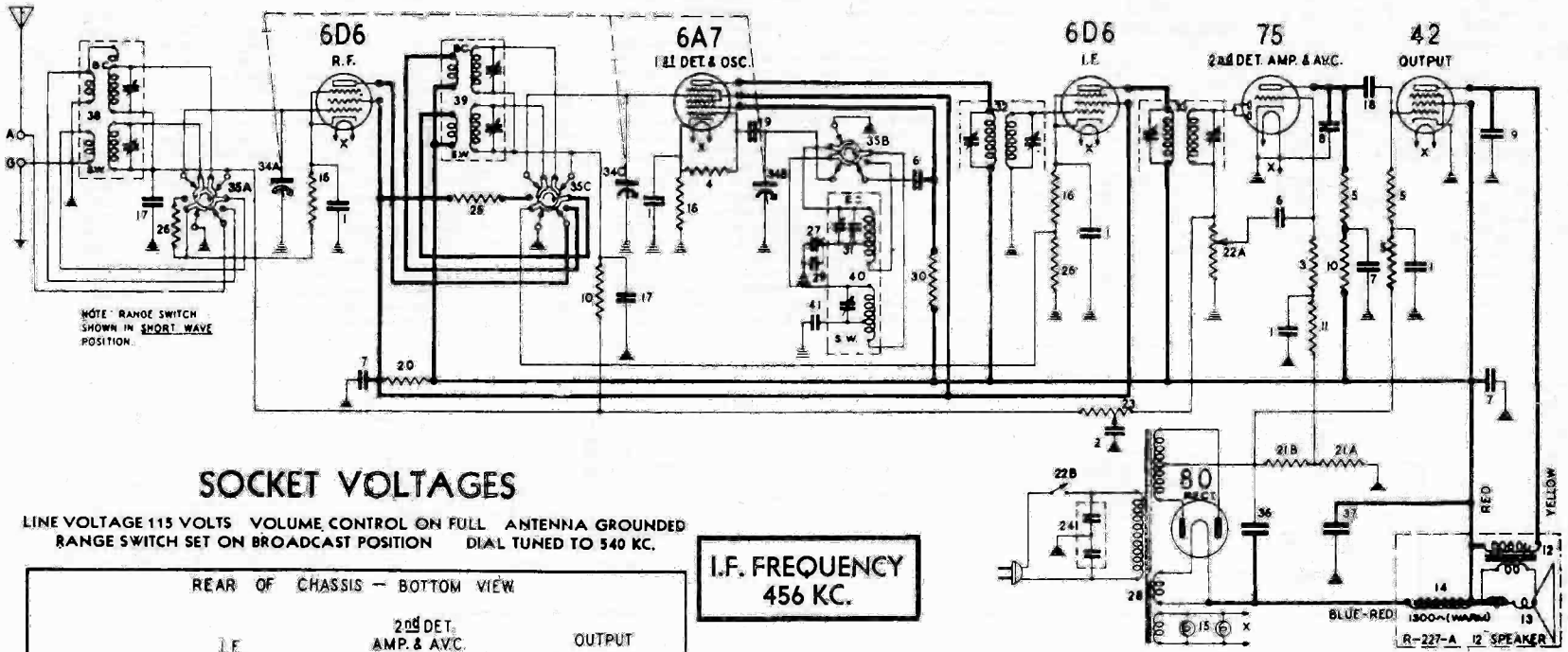

SOCKET VOLTAGES

LINE VOLTAGE 115 VOLTS VOLUME CONTROL ON FULL ANTENNA GROUNDED
RANGE SWITCH SET ON BROADCAST POSITION DIAL TUNED TO 540 KC.

I.F. FREQUENCY 456 KC.

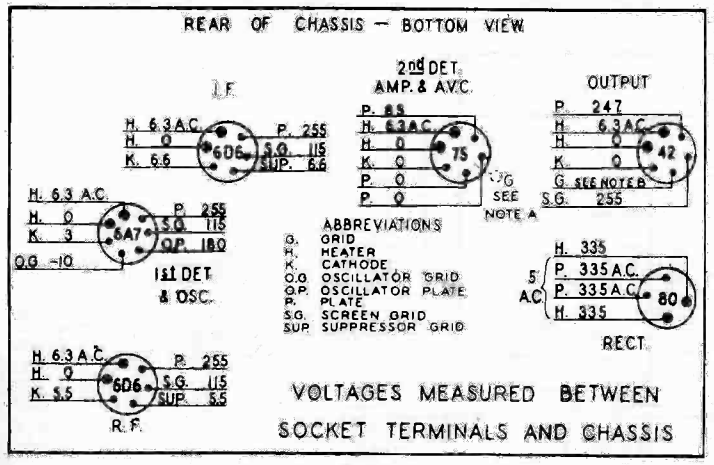

IMPORTANT: Use a high resistance meter of 1000 ohms per volt.

NOTE A: The grid bias for the 75 triode section is —1.2 volts measured across resistor 21A.

NOTE B: The grid bias on the 42 output tube is —16 volts, measured across the resistors 21A and 21B.

MODEL R-134 PARTS LIST

Diag. No.	Part No.	DESCRIPTION
1	81630	.1 mfd. 175 volt paper condenser
2	83011	.004 mfd. 600 volt paper condenser
3	83072	510,00 ohm ¼ watt carbon resistor
4	83080	51,000 ohm ¼ watt carbon resistor
5	83082	260,000 ohm ¼ watt carbon resistor
6	83219	.01 mfd. 600 volt paper condenser
7	83440	.1 mfd. 400 volt paper condenser
8	83539	260 mmfd. mica condenser
9	83706	.006 mfd. 600 volt paper condenser
10	84198	110,000 ohm ¼ watt carbon resistor
11	84235	1.1 megohm ¼ watt carbon resistor
12	84312	Output transformer (on R-227-A Spkr.)
13	84506	Diaphragm and shell assembly for (R-227-A Spkr.)
14	84507	Field coil and housing for (R-227-A Spkr.)
15	84759	Pilot lamp, 6-8 volt
16	84888	300 ohm ½ watt W.W. resistor
17	85053	.05 mfd. 100 volt paper condenser
18	85059	.05 mfd. 300 volt paper condenser
19	85061	51 mmfd. mica condenser
20	85063	15,000 ohm 2 watt carbon resistor
21A, 21B	85067	20 ohm, 220 ohm — Bias resistor (wire wound)
22A, 22B	85073	Volume Control (250,000 ohm), Line Switch
23	85074	Tone Control (500,000 ohm)
24	85075	Dual .01 mfd. 750 volt paper condenser
25	85116	25,000 ohm ½ watt carbon resistor
26	85117	1,000 ohm ½ watt carbon resistor
27	85285	Padding trimmer
28	85428	Power transformer, 115 volt 60 cycle
29	85441	420 mmfd. mica condenser
30	85442	21,000 ohm ½ watt carbon resistor
31	85454	11 mmfd. mica condenser
32	85788	1st I.F. transformer
33	85789	2nd I.F. transformer
34 A to C	85790	Three gang condenser
35 A to C	85791	Range switch
36	85792	16 mfd. 475 volt electrolytic condenser
37	85793	16 mfd. 475 volt electrolytic condenser
38	85829	Antenna coil and shield assembly
39	85830	R.F. coil and shield assembly
40	85831	Oscillator coil and shield assembly
41	85837	.00194 mfd. mica condenser

STEWART-WARNER MODEL R-160 AUTO RADIO CHASSIS (RECEIVER MODELS 1601 to 1609)

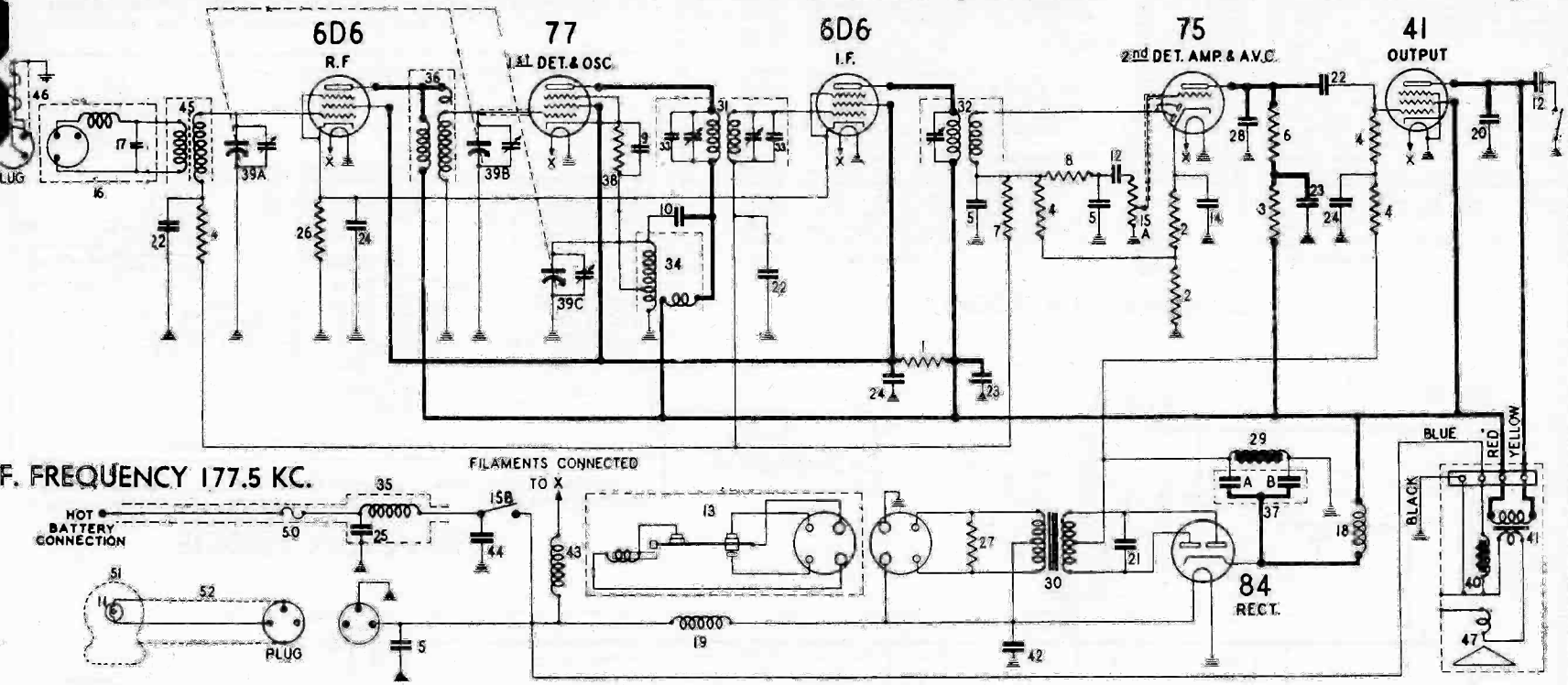

I.F. FREQUENCY 177.5 KC.

1	66023	60,000 ohm 1 watt carbon resistor
2	67303	2,000 ohm ¼ watt carbon resistor
3	83080	31,000 ohm ¼ watt carbon resistor
4	83082	260,000 ohm ¼ watt carbon resistor
5	83539	260 mmfd. mica condenser
48	83777	Battery cable and fuse housing
6	84198	110,000 ohm ¼ watt carbon resistor
7	84235	1.1 megohm ¼ watt carbon resistor
8	84238	11,000 ohm ¼ watt carbon resistor
9	84282	.001 mfd. mica condenser
10	84833	70 mmfd. mica condenser
11	85296	Pilot lamp 6-8 volt (bayonet base)
12	88026	.02 mfd. 400 volt paper condenser
49	88054	Tone control switch
13	88156	Vibrator
14	88170	10 mfd. 25 volt electrolytic condenser
15A, 15B	88171	Volume control 500,000 ohm; Line switch
16	88172	Antenna Filter
17	88173	50 mmfd. mica condenser
18	88181	R. F. choke coil
19	88183	R. F. choke coil (to vibrator)
20	88185	.006 mfd. 600 volt paper condenser
21	88187	.01 mfd. 1500 volt paper condenser
22	88189	.05 mfd. 200 volt paper condenser
23	88191	.1 mfd. 300 volt paper condenser
24	88193	.25 mfd. 150 volt paper condenser
25	88195	.5 mfd. 150 volt paper condenser
26	88203	600 ohm ¼ watt carbon resistor
27	88204	210 ohm ½ watt carbon resistor
28	88205	.0021 mfd. mica condenser
29	88210	Filter choke
30	88213	Power transformer
31	88222	1st I.F. transformer
32	88223	2nd I.F. transformer
33	88233	110 mmfd. mica condenser
34	88234	Oscillator coil and shield assembly
35	88239	"A" filter
36	88250	R.F. coil and shield assembly
37A, 37B	88256	Electrolytic condenser 4 mfd. 350 volt; Electrolytic condenser 8 mfd. 350 volt
38	88257	9,500 ohm ¼ watt carbon resistor
39A to C	88258	Three gang variable condenser
40	88274	Field coil and housing (for R-245-A spkr.)
41	88276	Output transformer
42	88285	1.25 mfd. 150 volt paper condenser
43	88289	R.F. choke (to filaments)
44	88298	.25 mfd. 150 volt paper condenser (low reactance)
45	88312	Antenna coil and shield assem. (iron core)
46	88327	Antenna cable and plug
47	88328	Diaphragm and shell assem. (R-245-A spkr.)
48	83777	Battery cable and fuse housing
49	88054	Tone control switch
50	88365	Fuse, 10 amperes
51	88730	Control head less shafts
52	88738	Pilot light cable with plug 31"

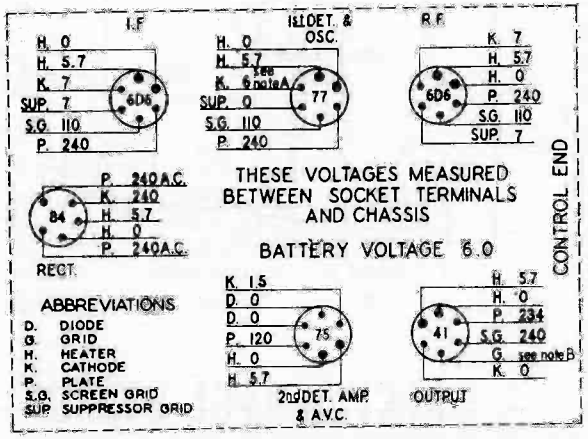

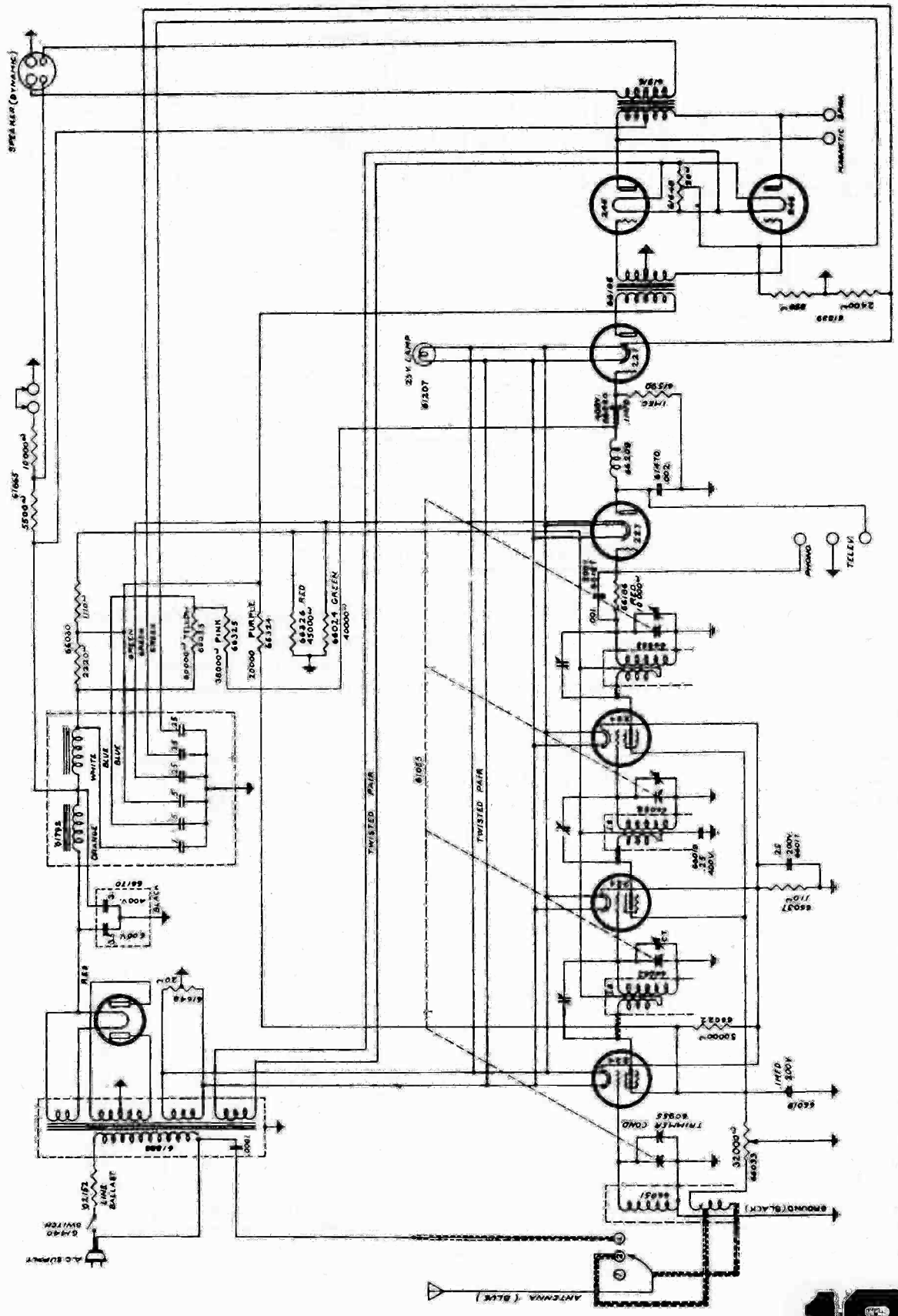

Stewart-Warner 950 Series A. C. Radio Receivers

19

SCHEMATIC DIAGRAM

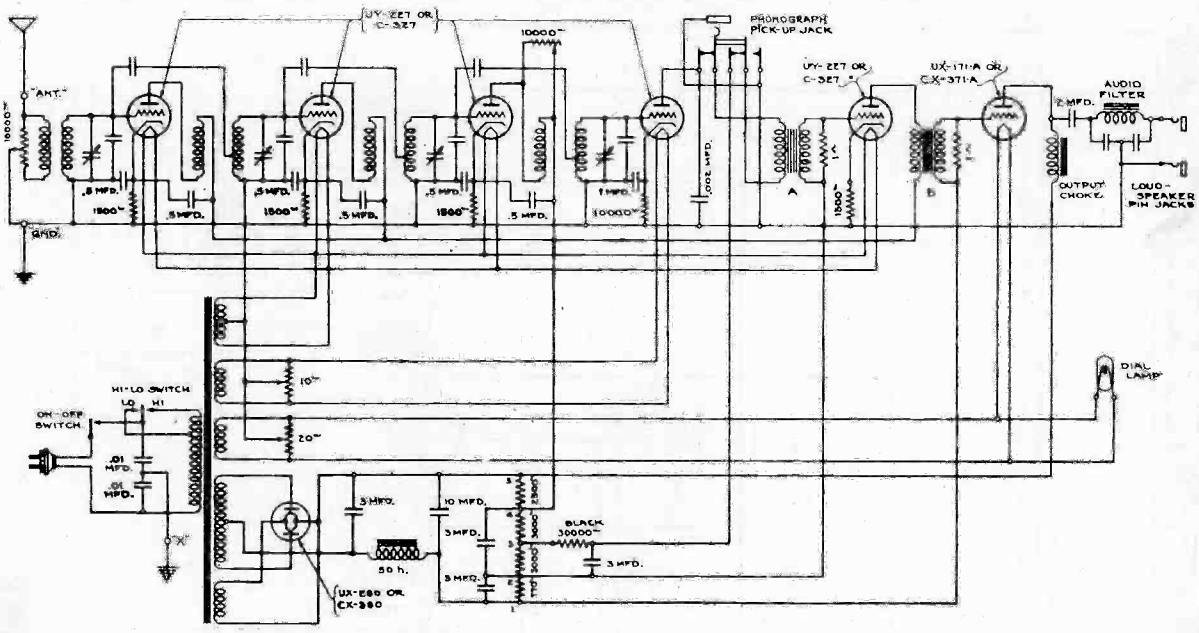

STROMBERG—CARLSON NOS. 635 AND 636 RECEIVERS

The following table shows how the filament, plate and grid voltages vary with different line voltages, in the No. 635 receiver. The plate voltages are measured between tube plates and Tap No. 2 of the voltage divider. The grid voltages of the heater type tubes are measured across the cathode resistors; and that of the audio output tube is measured between Taps No. 1 and No. 2 of the voltage divider.

Line Voltage "HI-LO" Switch	105 "LO"	110 "LO"	115 "LO"	115 "HI"	120 "HI"	125 "HI"
UX-280						
Filament Voltage (RMS)	4.5	4.75	5.0	4.5	4.7	4.93
Voltage per anode (RMS)	236.0	248.0	259.0	236.0	248.0	258.0
Amplifiers						
Heater Voltage (RMS)	2.17	2.27	2.38	2.16	2.26	2.35
Plate Voltage	106.0	110.0	115.0	106.0	110.0	115.0
Grid Voltage	— 5.0	— 5.5	— 5.75	— 4.7	— 5.2	— 5.6
Detector						
Heater Voltage (RMS)	2.11	2.22	2.32	2.1	2.2	2.3
Plate Voltage	39.0	40.0	42.0	38.0	40.0	41.0
Grid Voltage	— 3.25	— 3.5	— 3.75	— 3.25	— 3.5	— 3.75
Audio Output Tube						
Filament Voltage (RMS)	4.5	4.75	5.0	4.53	4.72	4.94
Plate Voltage	167.0	175.0	184.0	165.0	174.0	182.0
Grid Voltage	—37.0	—40.0	—41.0	—36.0	—40.0	—41.0

NOTE—The grid voltage on the 1st audio tube will be slightly lower than that on the R. F. amplifier tubes, due to the drop in the secondary of the 1st audio transformer.

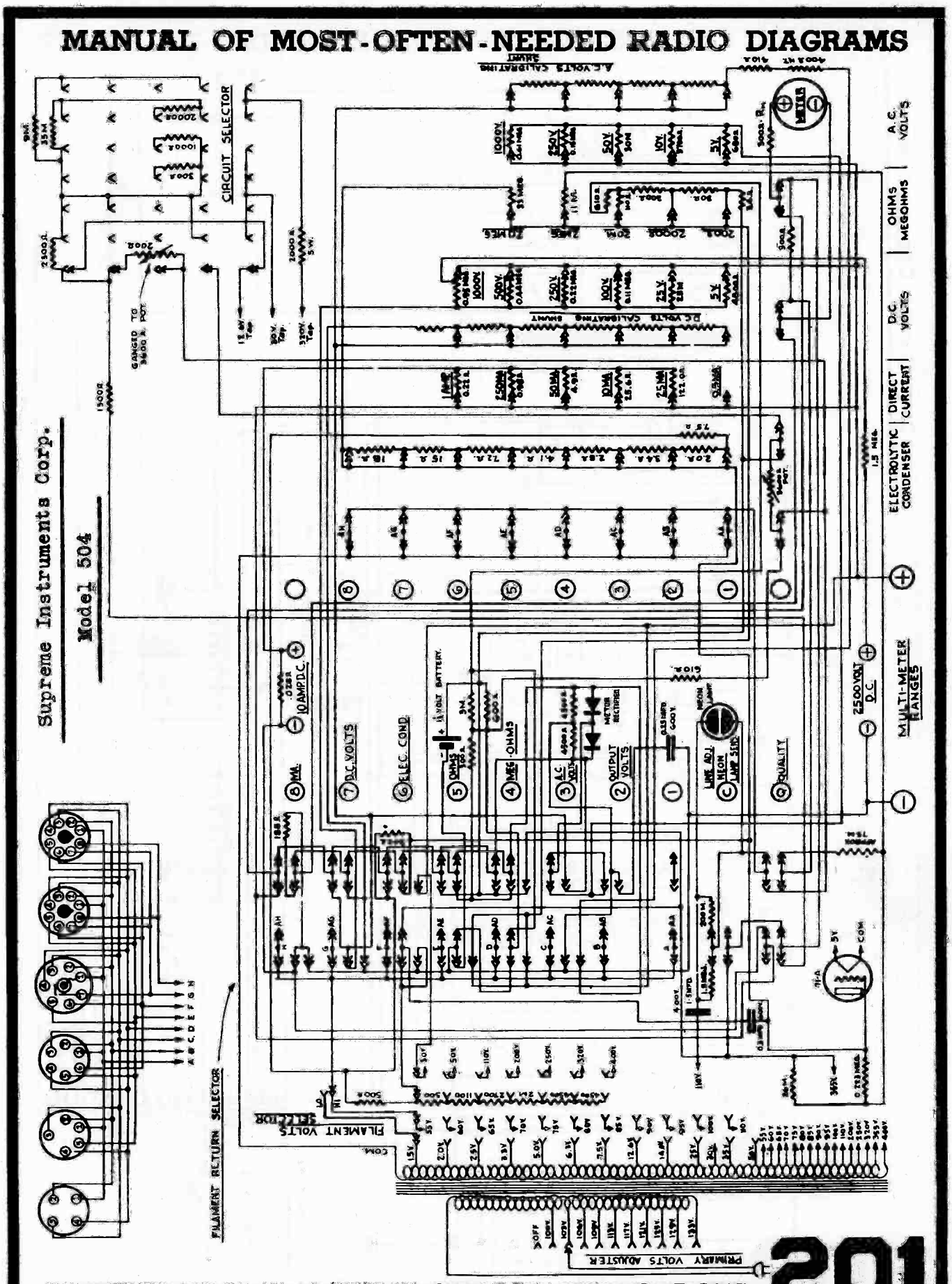
Supreme Instruments Corp.
Model 504
CIRCUIT SELECTOR
A.C. VOLTS
OHMS MEGOHMS
D.C. VOLTS
DIRECT CURRENT
ELECTROLYTIC CONDENSER
MULTI-METER RANGES
2500 VOLT D.C.
10 AMP D.C.
D.C. VOLTS
ELEC. COND.
OUTPUT VOLTS
QUALITY
FILAMENT VOLTS SELECTOR
FILAMENT RETURN SELECTOR
PRIMARY VOLTS ADJUSTER
A.C. VOLTS CALIBRATING SHUNT
D.C. VOLTS CALIBRATING SHUNT
GANGED TO 3600 Ω POT.

Transformer Corp. of America

Models 51, 53, 55

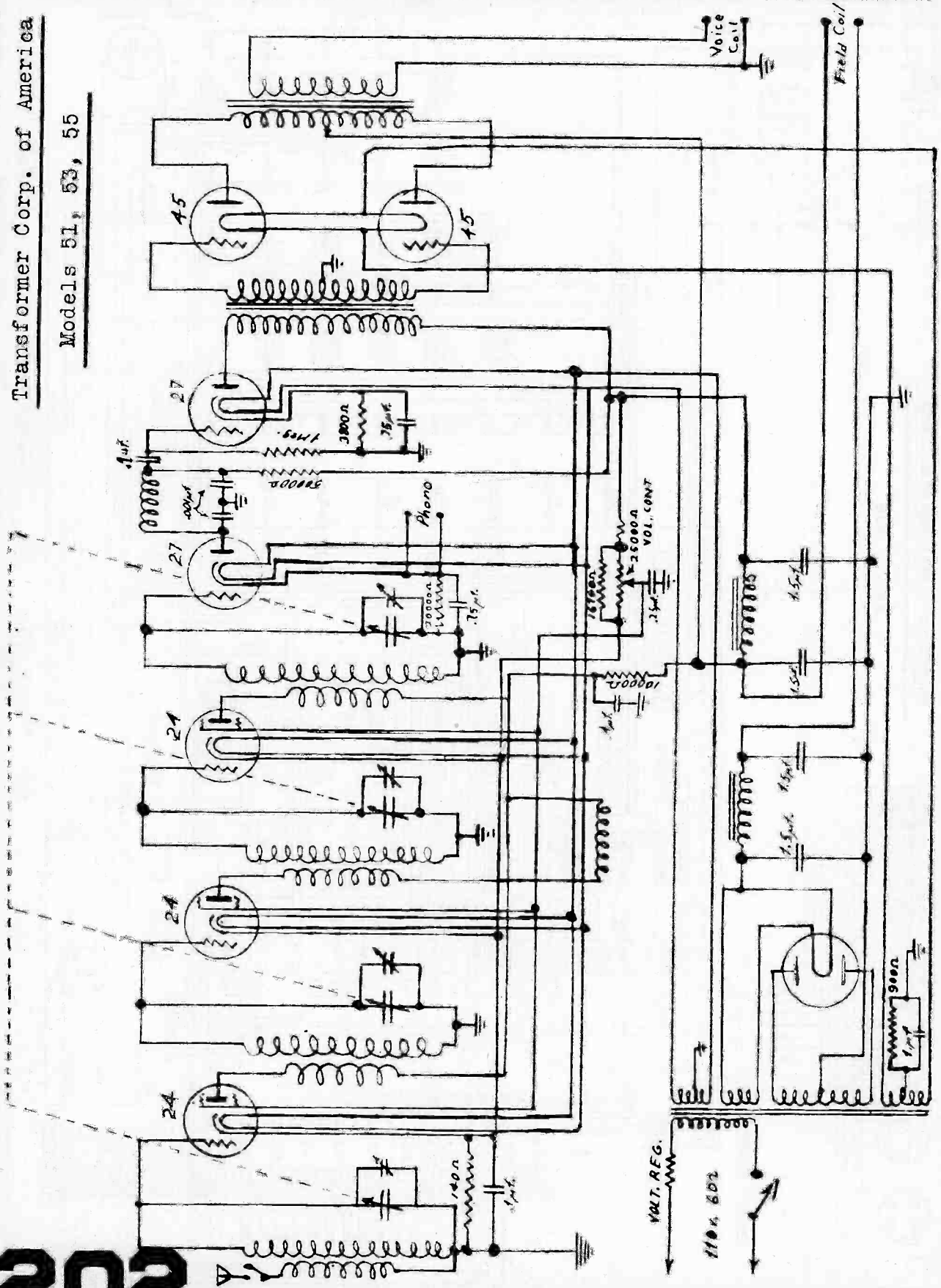

Transformer Corp. of America
Model 480

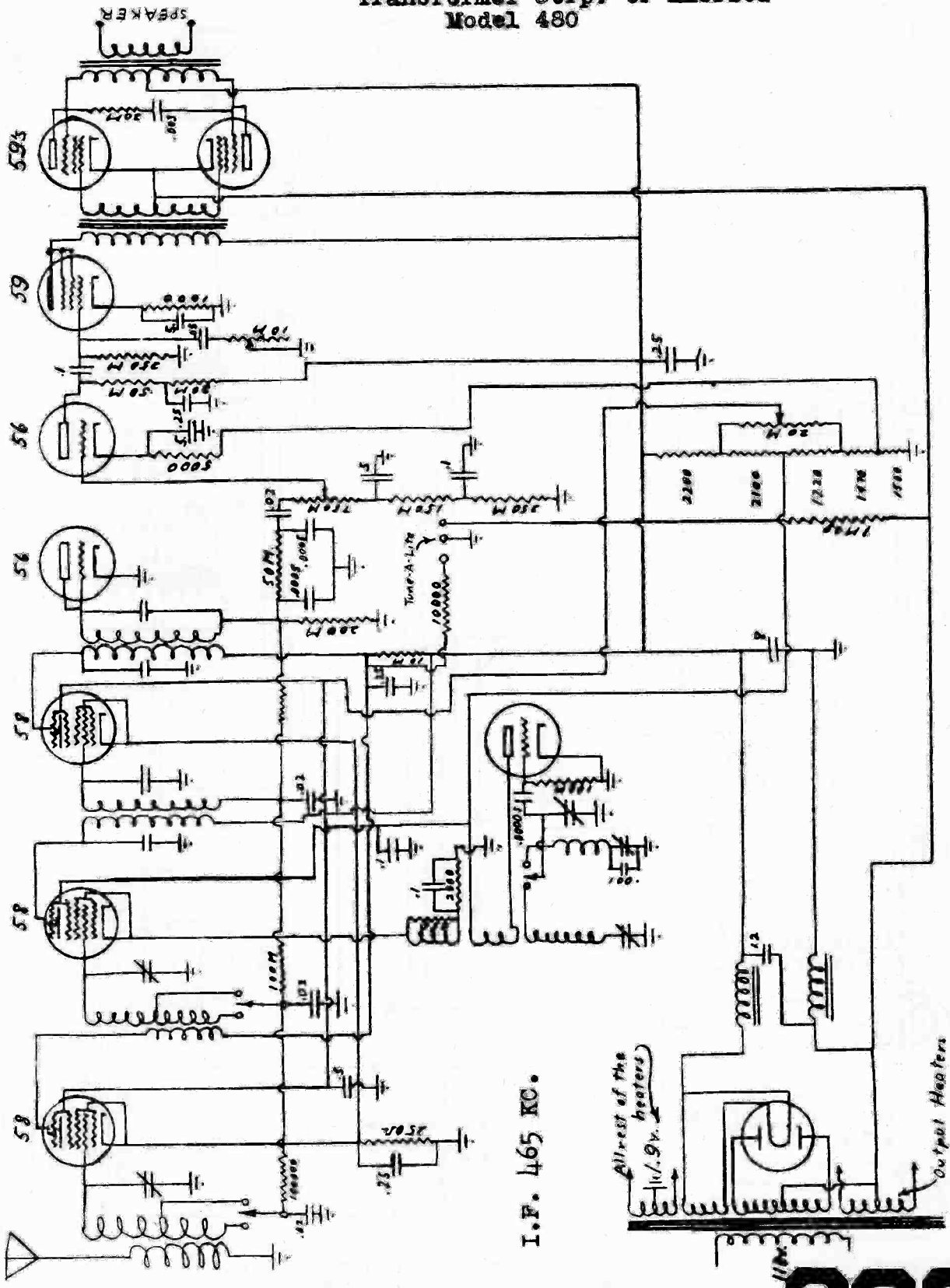

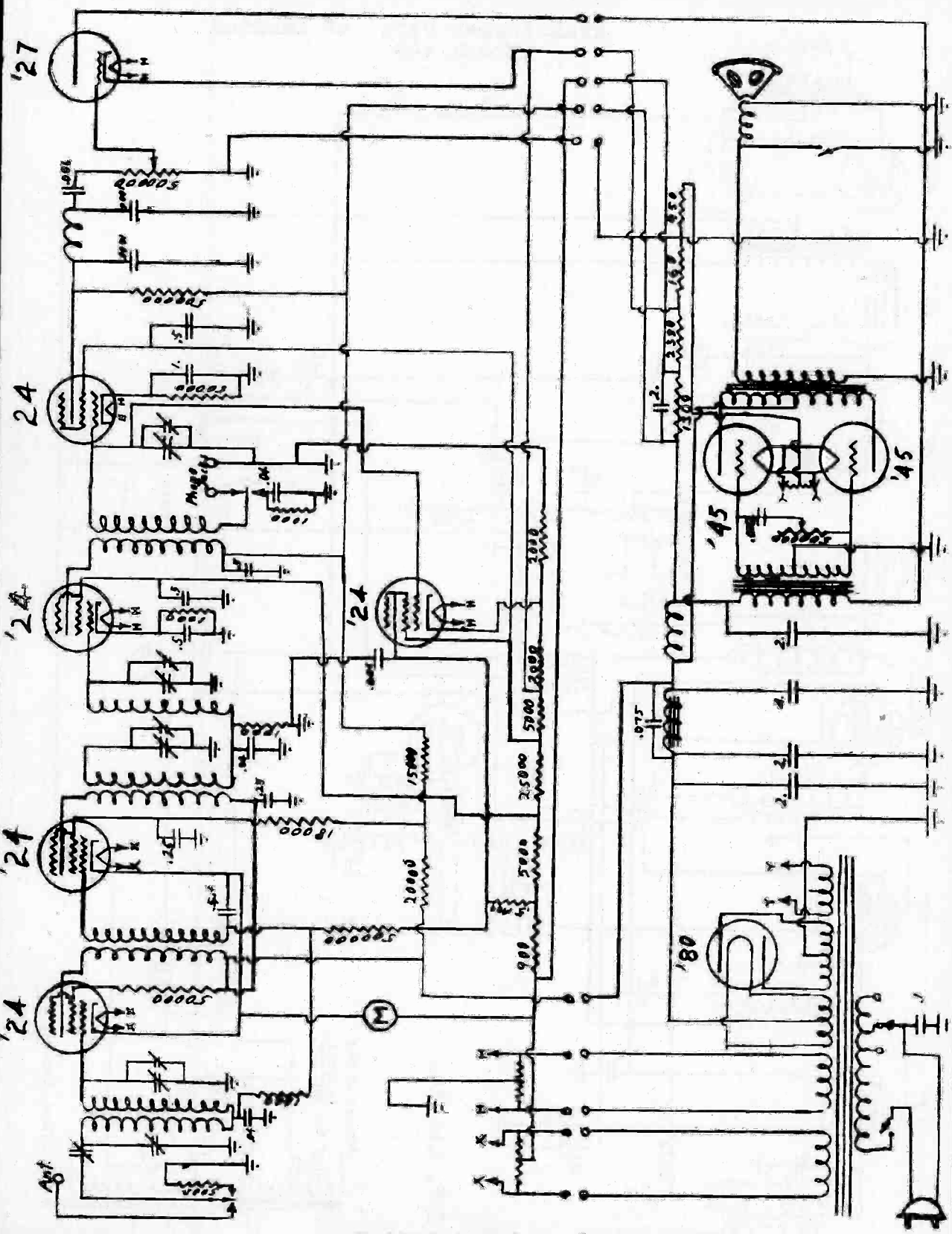

United American Bosch Corp.
Models: 60, 60D, 60E, 61

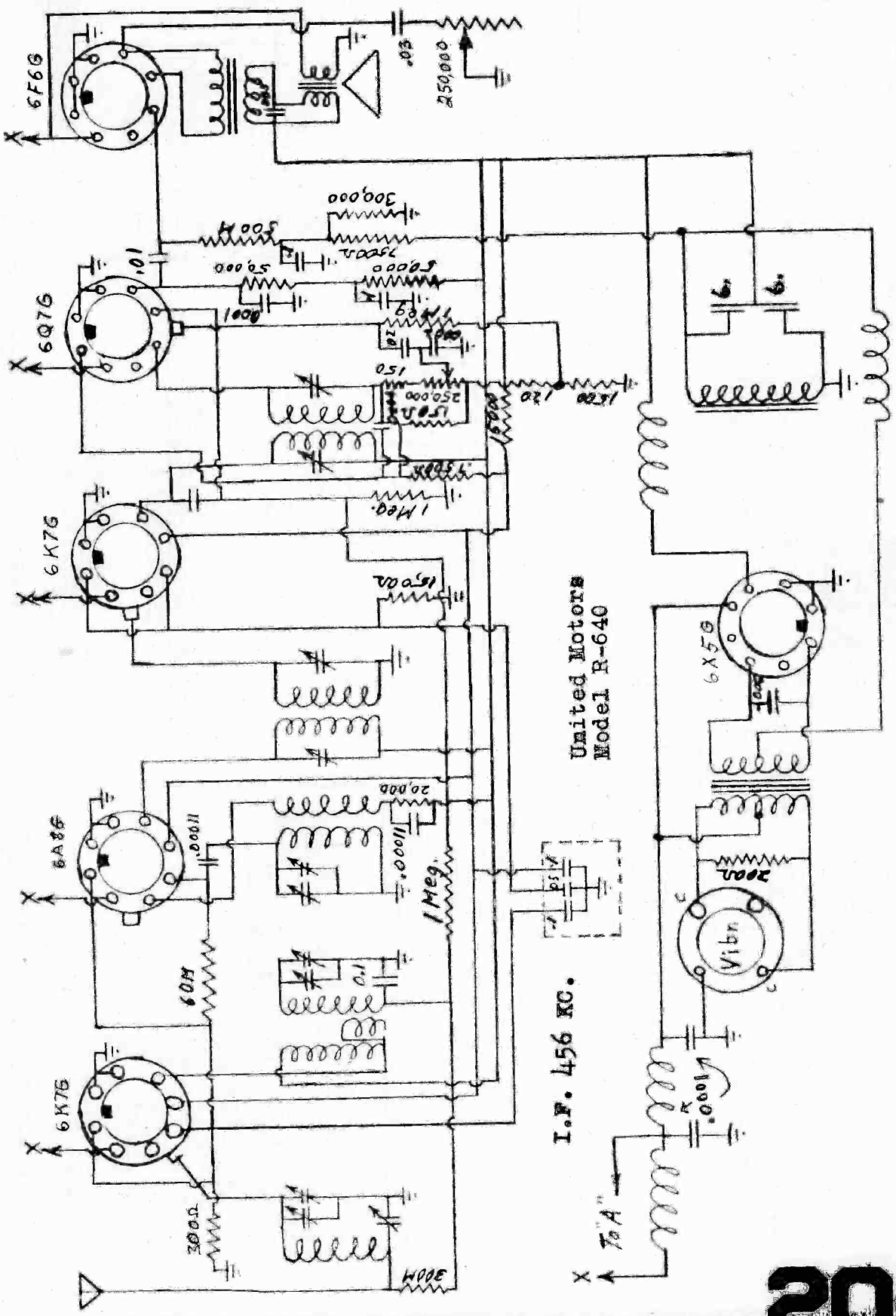
6F6G
6Q7G
6K7G
6A8G
6K7G
6X5G
Vibr
United Motors
Model R-640
I.F. 456 KC.
To "A"
250,000
300,000
1 Meg.
20,000
60H
300Ω
300H

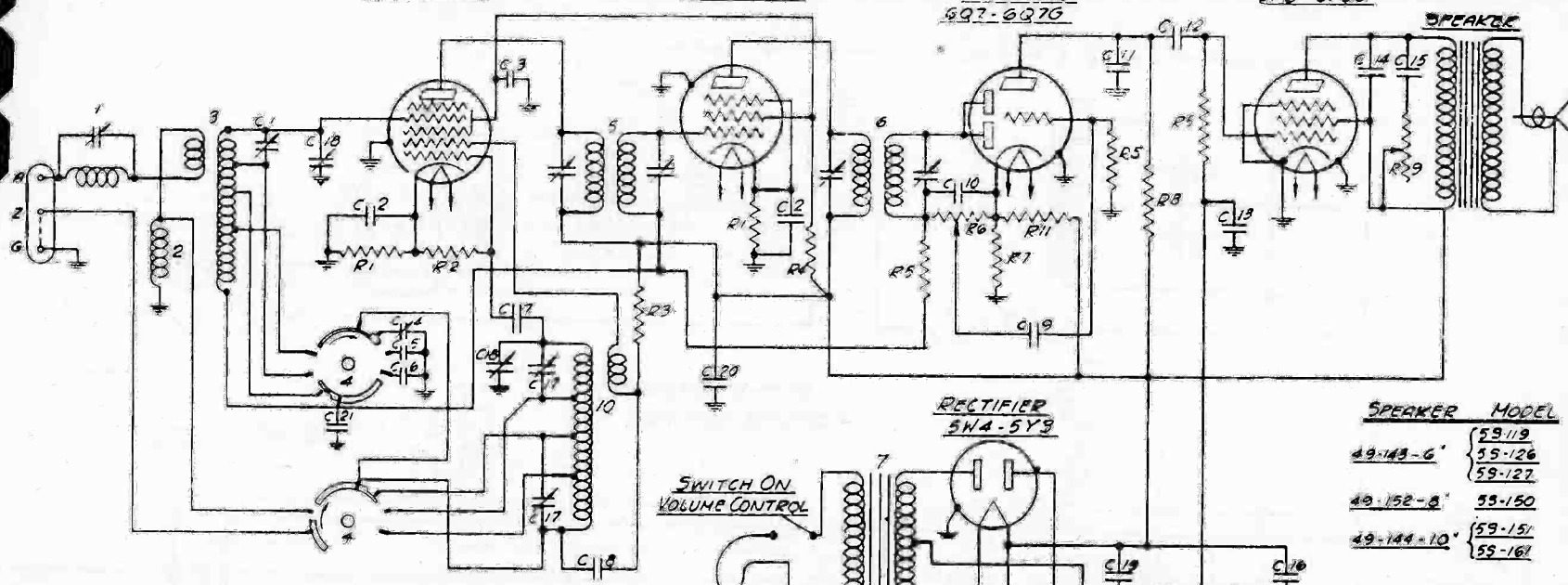

DIAG NO	PART NO	DESCRIPTION	
C1	22-305	2-8.5 MMFD TRIMMER	
C2	250	.05 MFD	200V
C3	212	.03 MFD	400V
C4	305	200-550 MFD PADDER	
C5	384	.0015 MFD	600V
C6	485	.005 MFD	600V
C7	127	25 MMFD	600V
C8	486	.0012 MFD	600V
C9	188	.02 MFD	400V
C10	162	.0001 MFD	600V
C11	147	.0005 MFD	600V
C12	435	.02 MFD	600V
C13	138	.2 MFD	200V
C14	82	.001 MFD	600V
C15	494	1 MFD	600V
C16	506	16 MFD ELEC COND WET	250V
C17	408	2-35 MMFD TRIMMER COND	
C18	482	2-GANG VARIABLE COND	
C19	505	12 MFD ELEC COND WET	325V
C20	170	1 MFD	1400V
C21	487	.05 MFD (BRID LEADS)	400V
R1	89-362	400 OHMS	1/4 W
R2	280	49 M OHMS	1/4 W
R3	373	11 M OHMS	1/2 W
R4	263	90 M OHMS	1/2 W
R5	293	990 M OHMS	1/4 W
R6	320	400 M OHM VOL CONT & SW	
R7	318	590 OHMS	1/4 W
R8	298	490 M OHMS	1/4 W
R9	321	50 M OHM TONE CONTROL	
R10	376	190 M OHMS	1/4 W
R11	486	80 M OHMS	1 W

DIAG NO	PART NO	DESCRIPTION
1	20-133	WAVE TRAP ASSEM
2	20-134	ANTENNA CHOKE
3	5-4362	ANTENNA COIL ASSEM
4	85-89	BAND SELECTOR SWITCH
5	95-349	1ST I.F. TRANSFORMER
6	95-350	2ND I.F. TRANSFORMER
7	85-351	POWER TRANS 115V 50-60 CYCLE
	95-961	POWER TRANS 25 CYCLE ALL VOLT
8	44-7	PHONO JACK
9	85-39	PHONO SWITCH
10	5-4369	OSC. COIL ASSEM.

I.F. FREQUENCY 456 KC
5 TUBE SUPERHETERODYNE - 3 BANDS
CHASSIS No 5516

ZENITH RADIO CORPORATION
CHICAGO, ILLINOIS

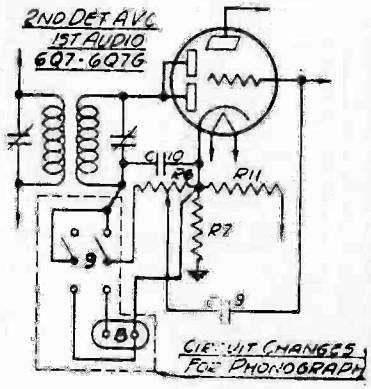

Models 5-S-119, 5-S-126, 5-S-127, 5-S-150, 5-S-151, 5-S-161. (Chassis No. 5516)

United Motors Service Model 4037

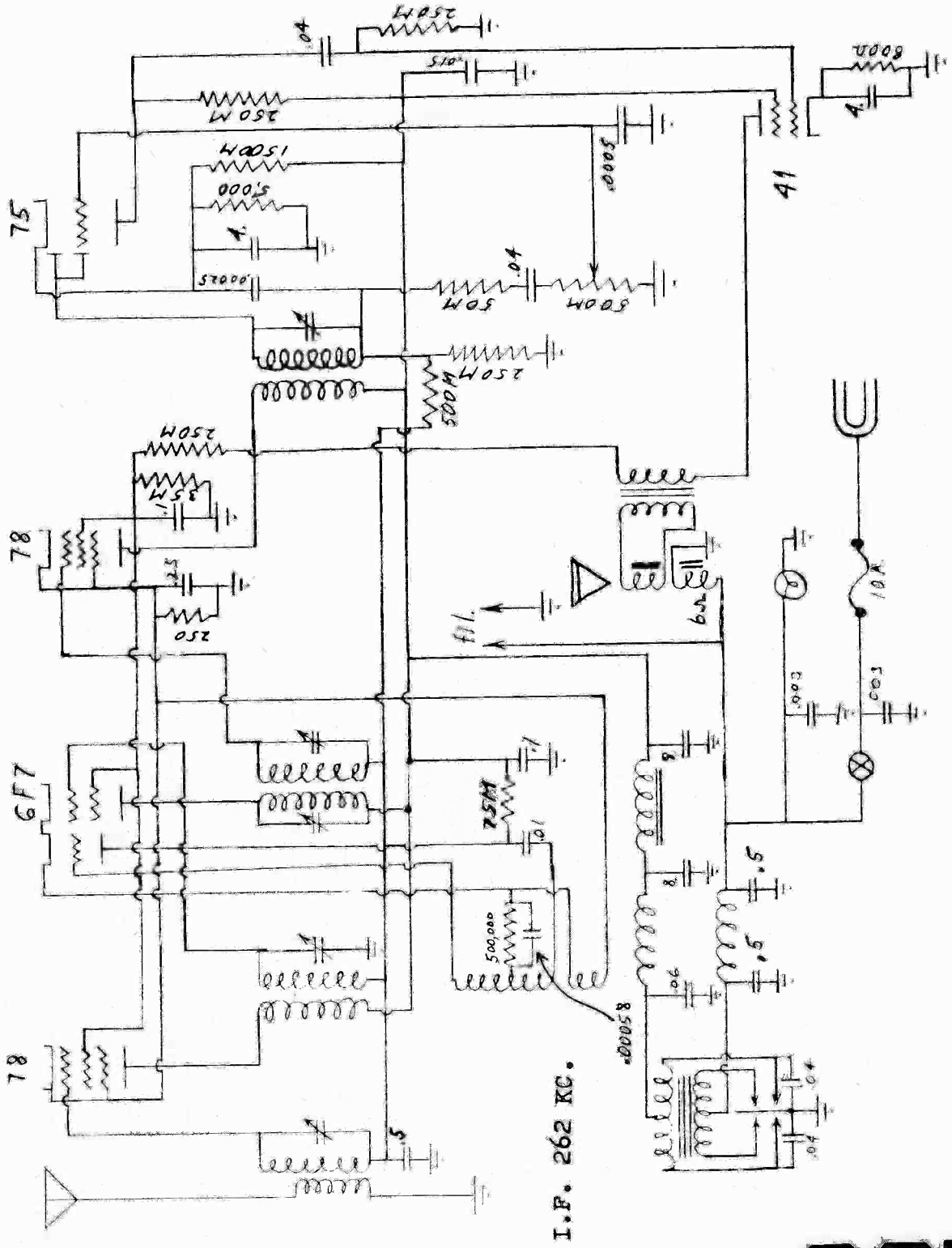

United Motors Model 364441

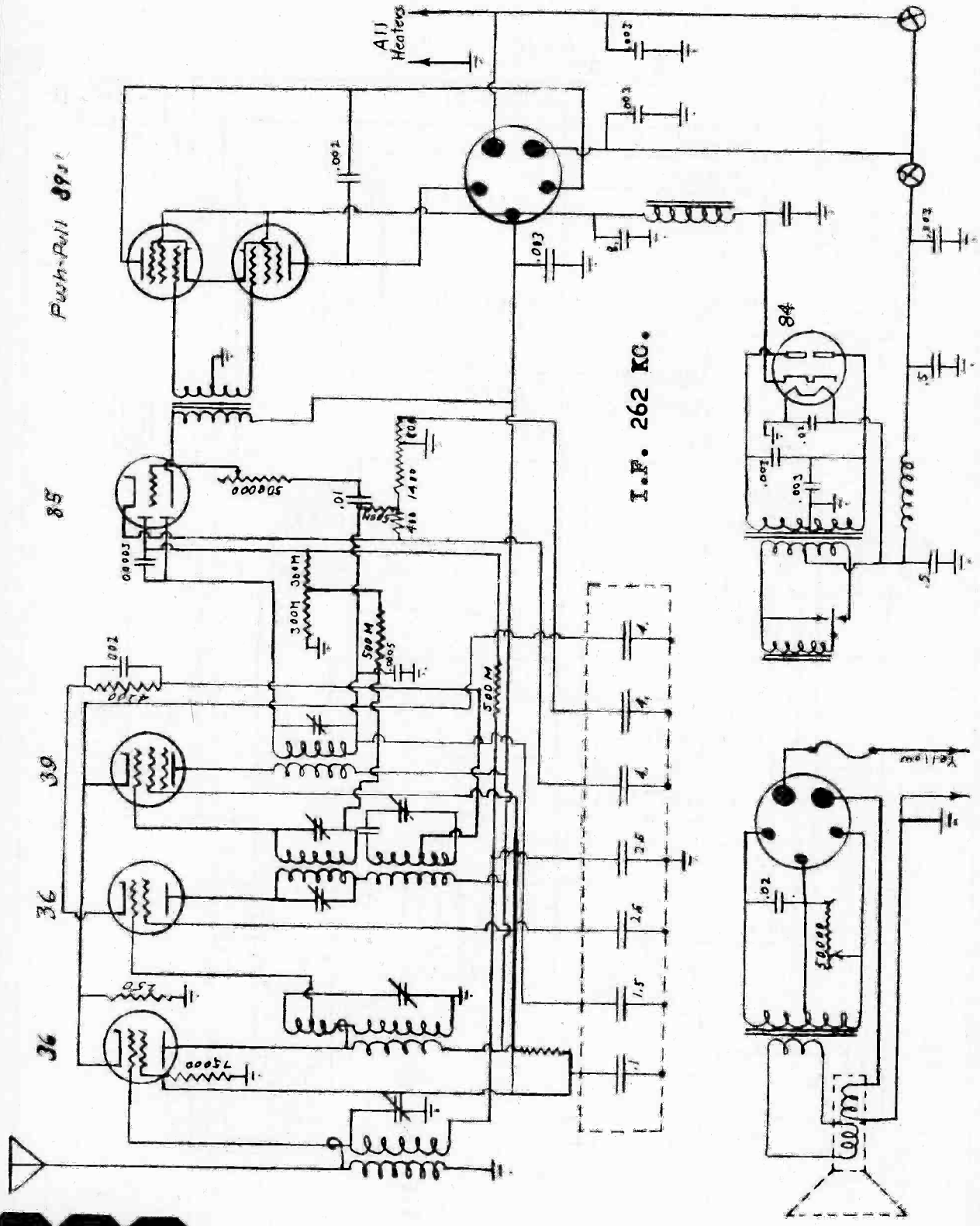

COMPILED BY M. N. BEITMAN, SUPREME PUBLICATIONS

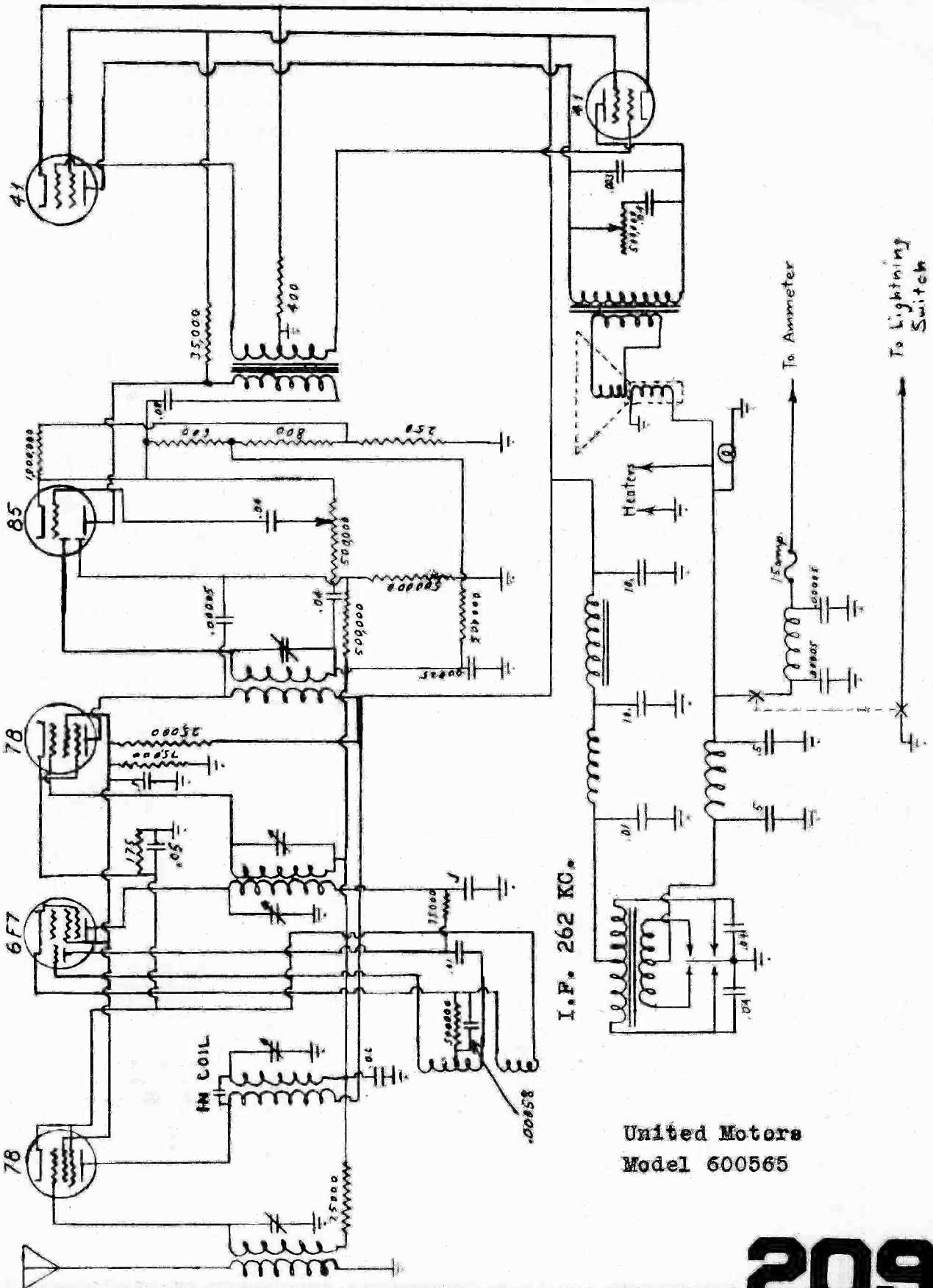

United Motors
Model 600565

United Motors
Model 601574
Chevrolet

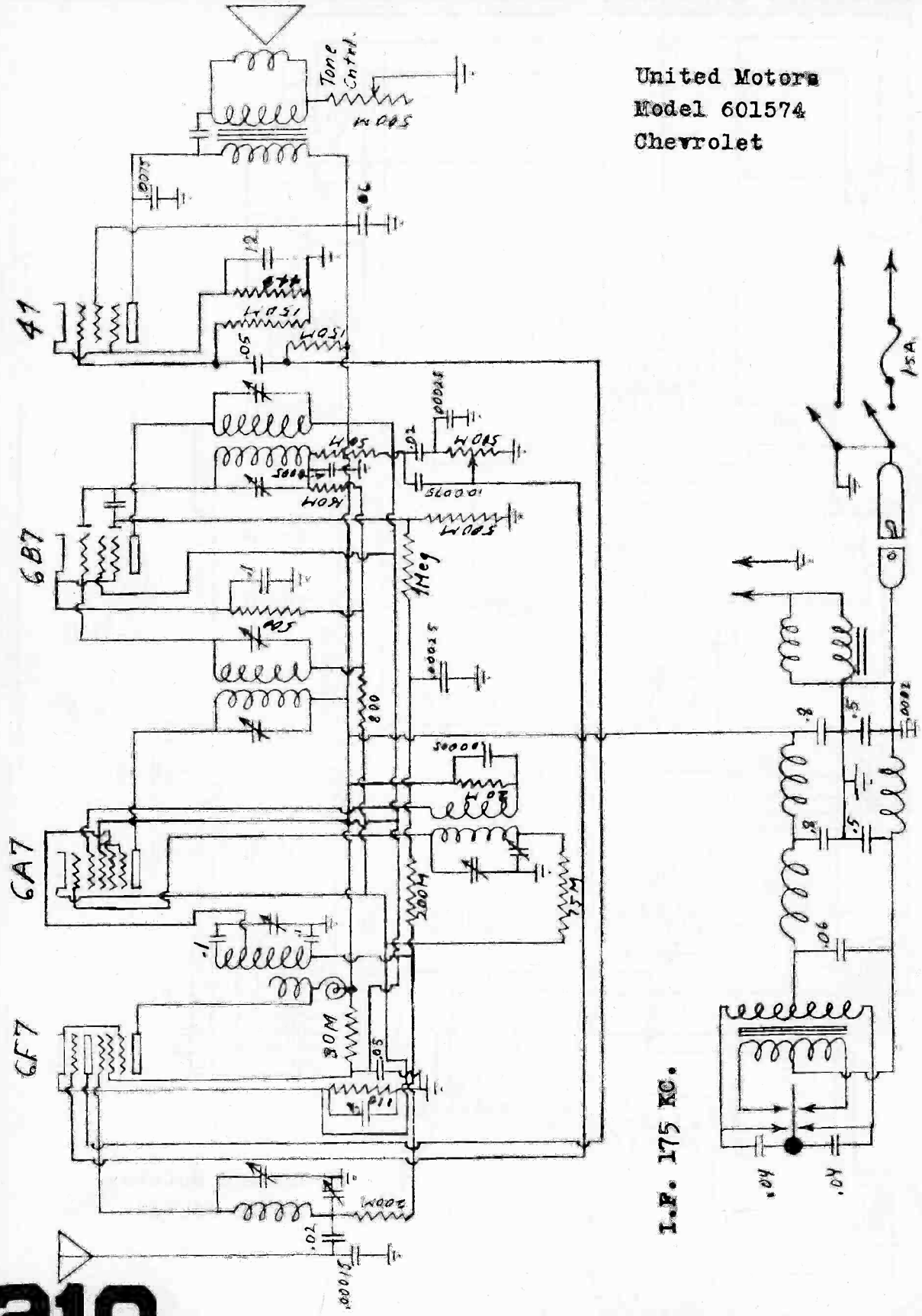

COMPILED BY M. N. BEITMAN, SUPREME PUBLICATIONS

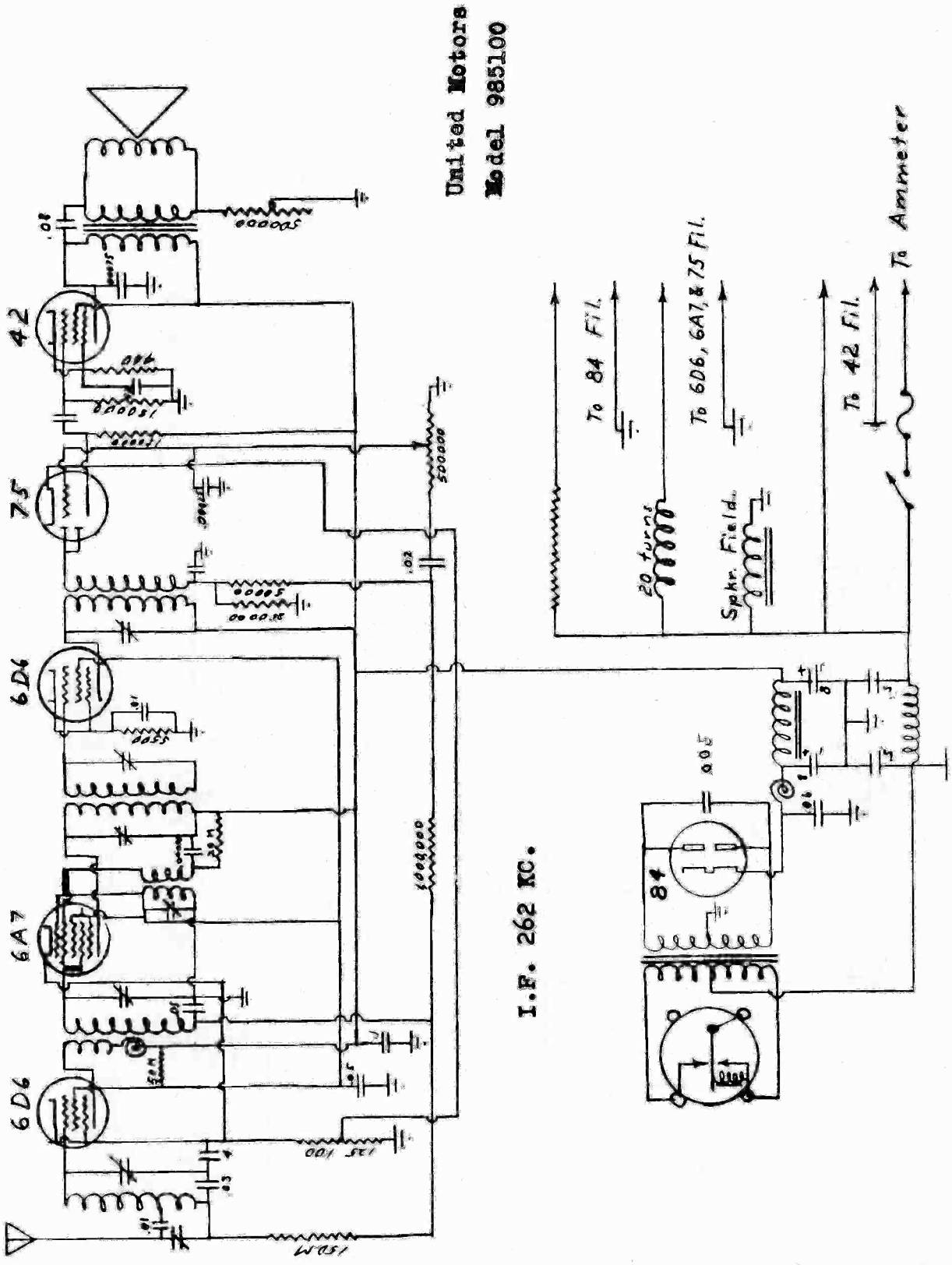
United Motors
Model 985100
42
75
6D6
6A7
6D6
84
To 84 Fil.
To 6D6, 6A7, & 75 Fil.
To 42 Fil.
To Ammeter
20 turns
Spkr. Field
I.F. 262 KC.

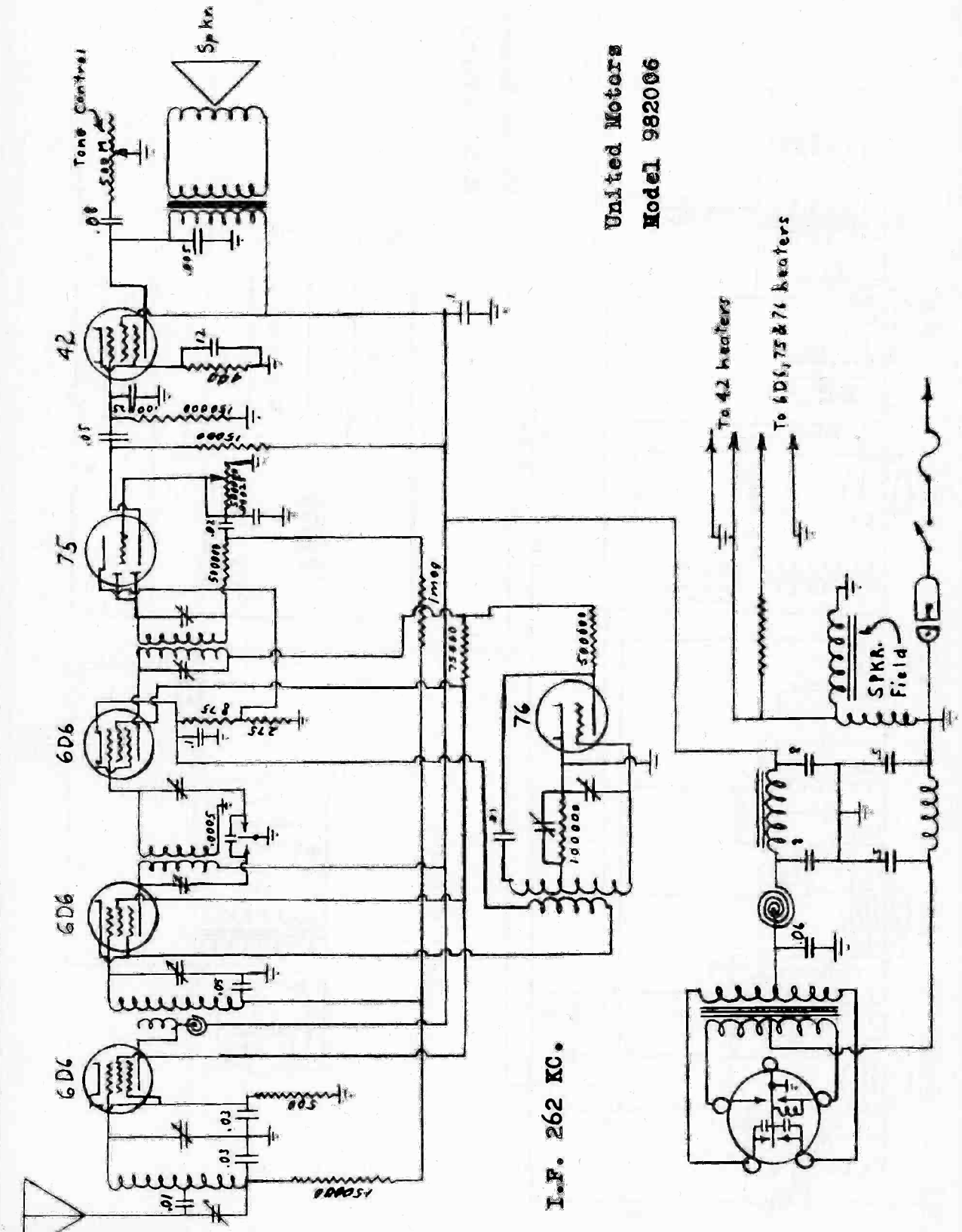

United Motors
Model 982006

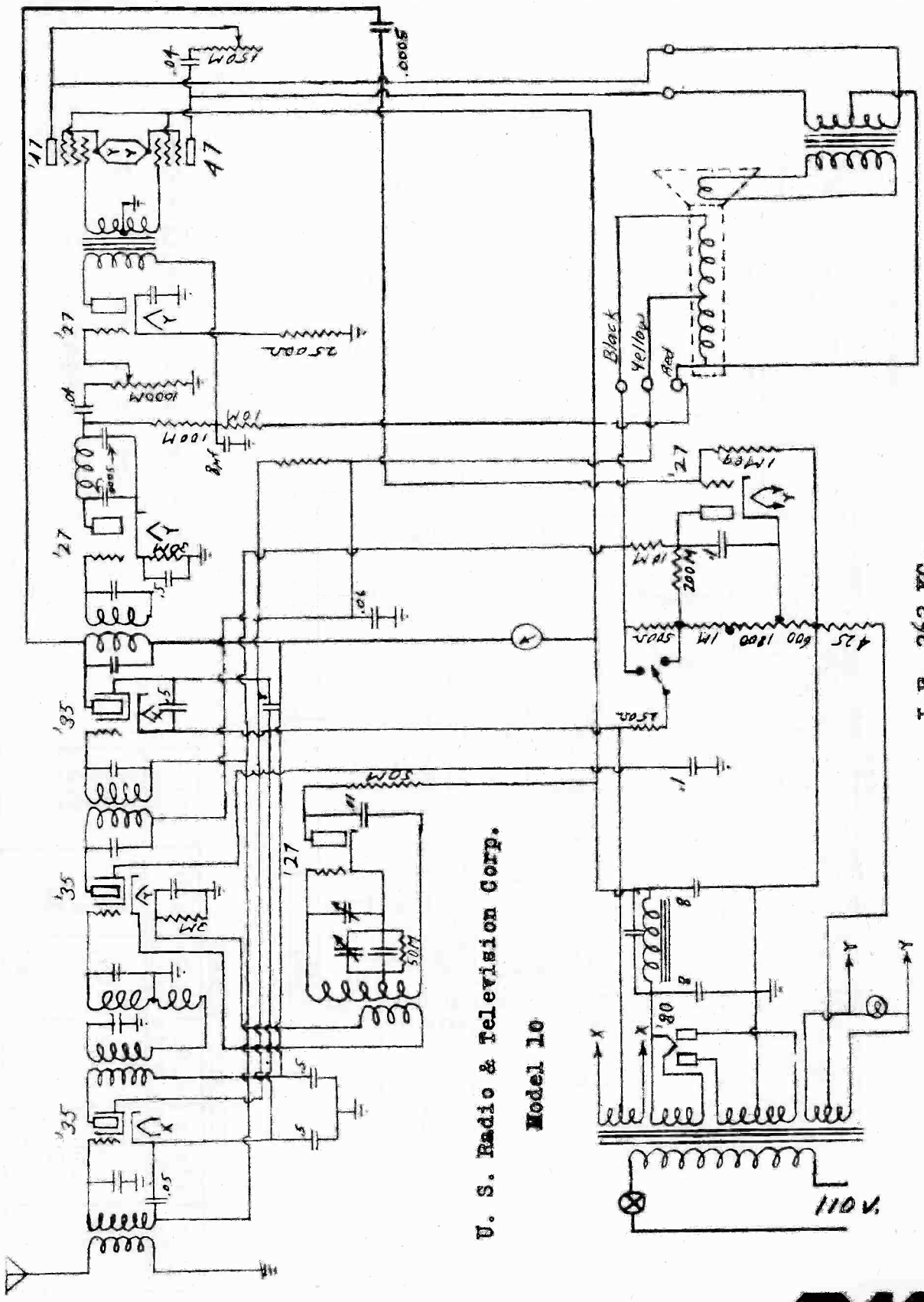

U. S. Radio & Television Corp.

Model 10

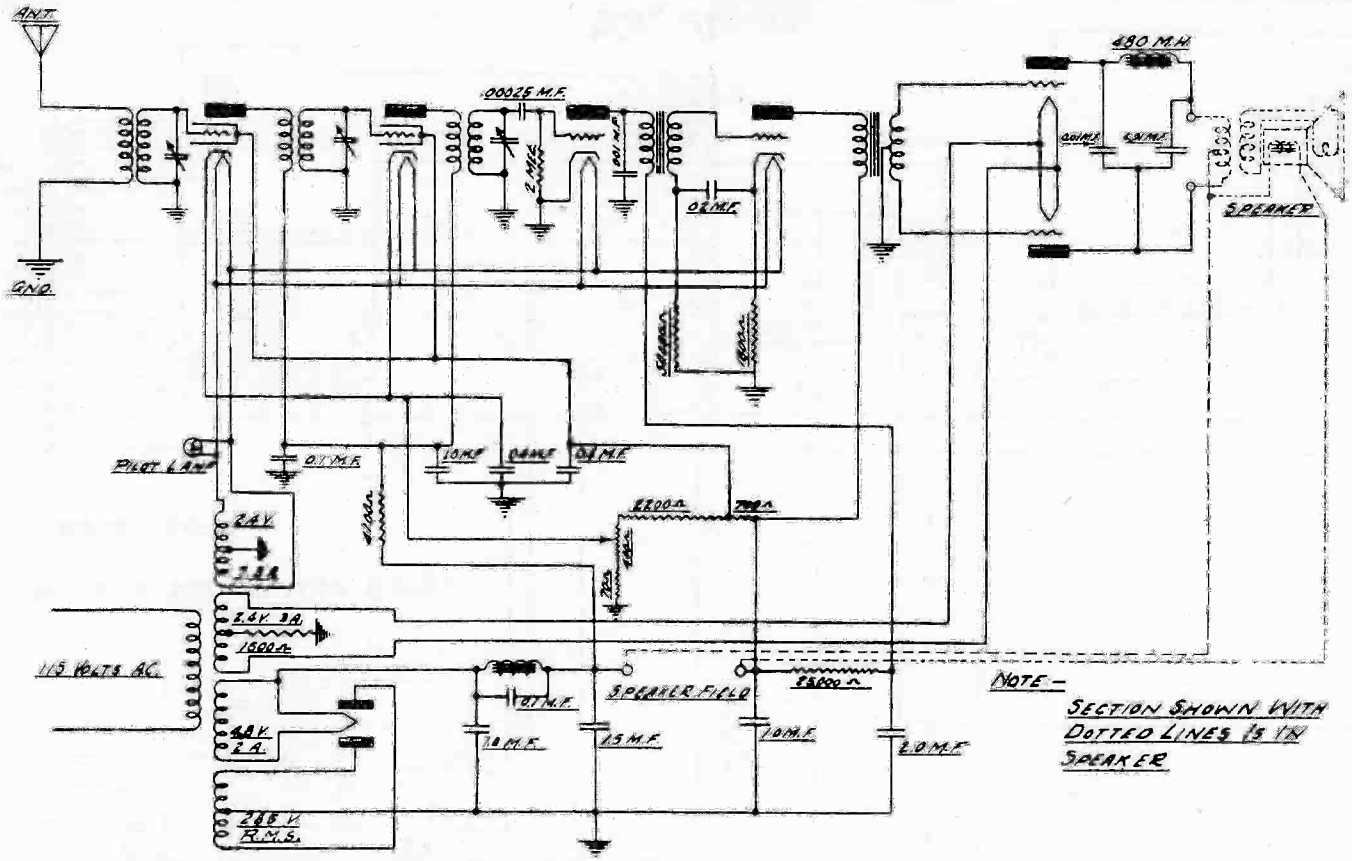

VOLTAGE CHART

Tube Type	Plate Voltages to ground	S.G.	C.G.	Cath.	Fil. Term.
24	173	86		2.7	2.3
27	38	Detector			2.3
27	100			6.	2.3
45	169			38.	2.3
80	285 A.C. each plate				4.6

U. S. Radio & Television Corp.

Models 46, 46A, 47, 47A

Apex

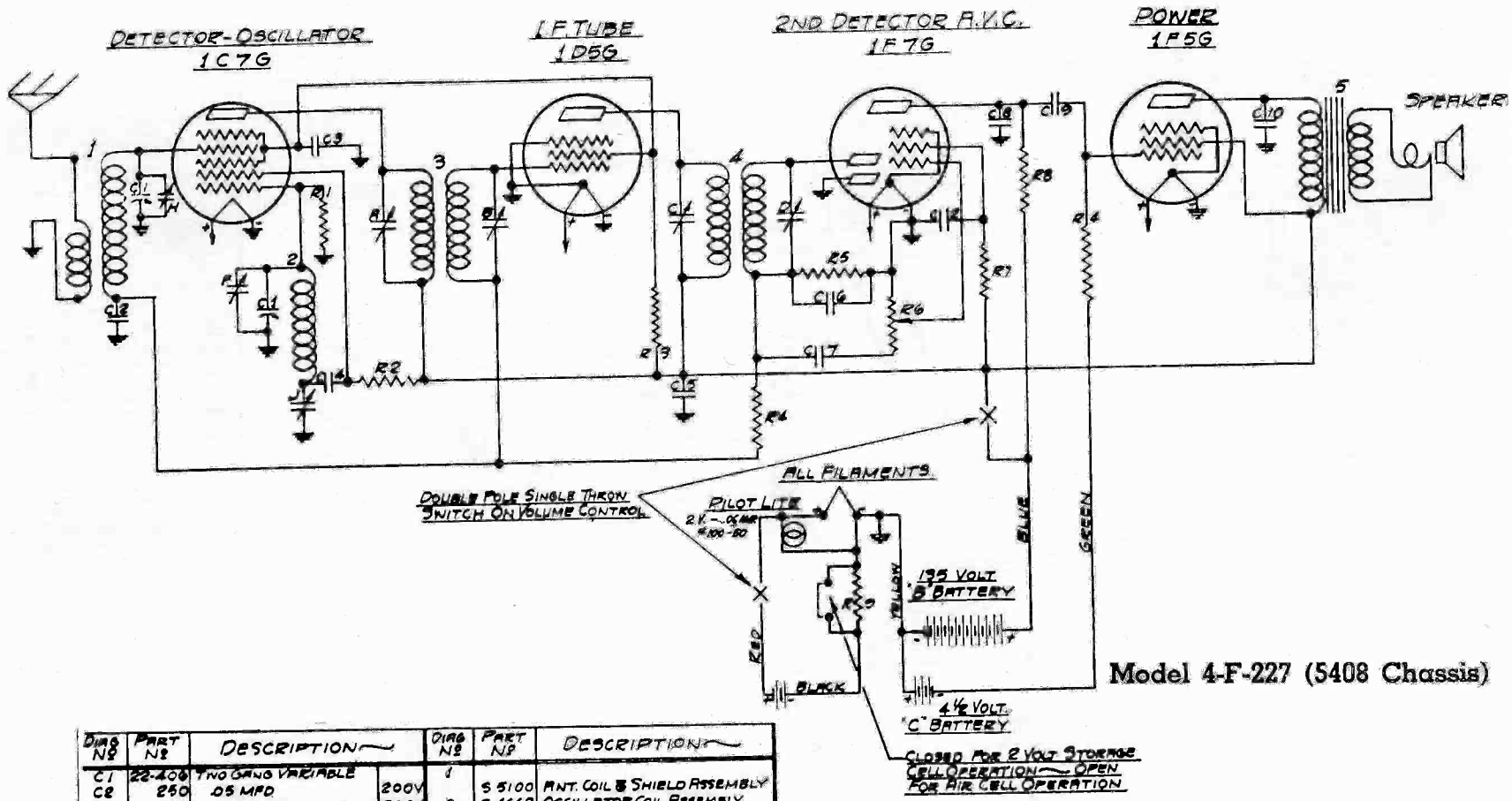

Model 4-F-227 (5408 Chassis)

DIAG Nº	PART Nº	DESCRIPTION		
C1	22-406	TWO GANG VARIABLE		
C2	250	.05 MFD		200V
C3	199	.5 MFD		200V
C4	958	.002 MFD		600V
C5	212	.05 MFD		400V
C6	162	.0001 MFD		600V
C7	527	.02 MFD		200V
C8	147	.0005 MFD		600V
C9	188	.02 MFD		400V
C10	402	.002 MFD		600V
R1	65-609	47 M OHM		¼W ± 20
R2	658	5600 OHM		¼W ± 10
R3	647	39 M OHM		¼W ± 10
R4	271	1 MEGOHM		¼W ± 20
R5	658	390 M OHM		¼W ± 10
R6	548	1 MEGOHM VOLUME CONTROL		
R7	441	1 MEGOHM		¼W ± 10
R8	657	330 M OHM		¼W ± 10
R9	884	.64 OHM (WIREWOUND)		¼W ± 10

DIAG Nº	PART Nº	DESCRIPTION
1	S 5100	ANT. COIL & SHIELD ASSEMBLY
2	S 4662	OSCILLATOR COIL ASSEMBLY
3	05-419	1ST. I.F. TRANSFORMER
4	05-420	2ND. I.F. TRANSFORMER
5	——	SPEAKER TRANS. (ON SPEAKER)
		VARIABLE TRIMMERS.—
A		1ST. I.F. TRANSFORMER PRIMARY
B		1ST. I.F. TRANSFORMER SECONDARY
C		2ND. I.F. TRANSFORMER PRIMARY
D		2ND. I.F. TRANSFORMER SECONDARY
F		BROADCAST OSCILLATOR (ON GANG)
H		ANTENNA BROADCAST (ON GANG)
J	#22-519	OSCILLATOR PADDER.

MODEL 4F227

SPEAKER 49-209—6"

I.F. FREQUENCY 456 K.C.

4 TUBE BATTERY SUPERHETERODYNE

CHASSIS Nº 5408

ZENITH RADIO CORPORATION

MANUAL OF MOST-OFTEN-NEEDED RADIO DIAGRAMS

COMPILED BY M. N. BEITMAN, SUPREME PUBLICATIONS

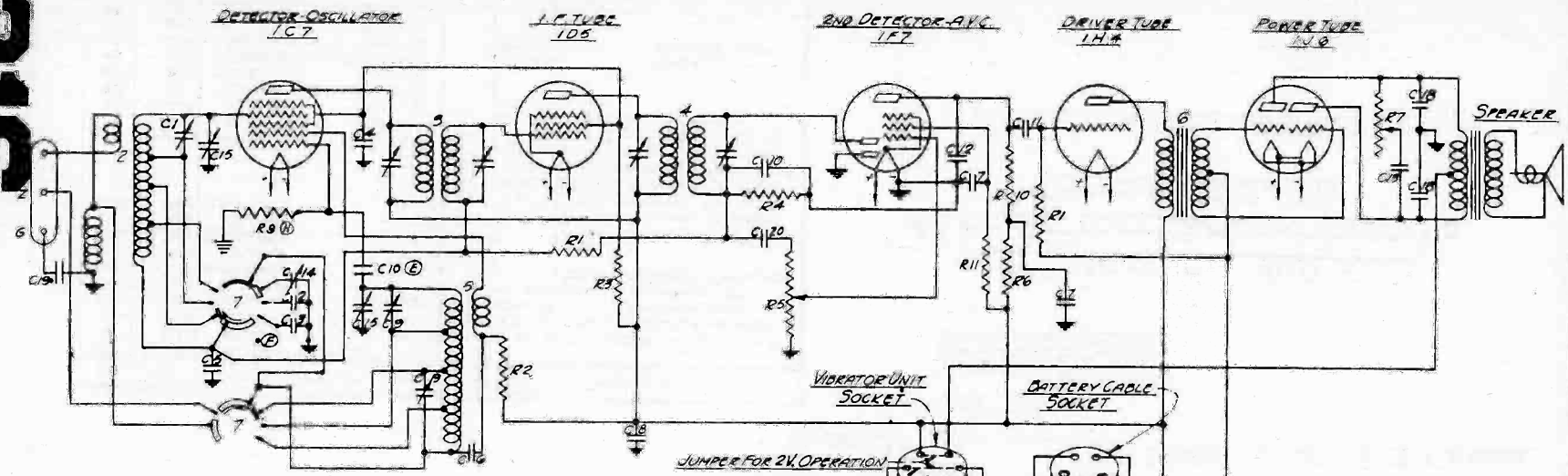

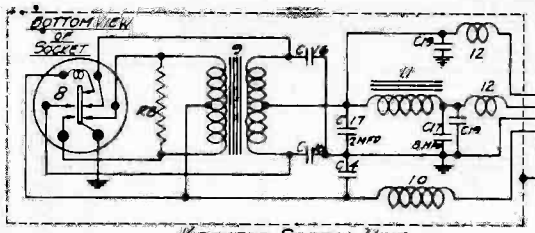

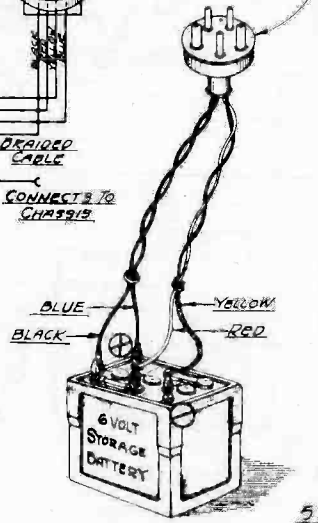

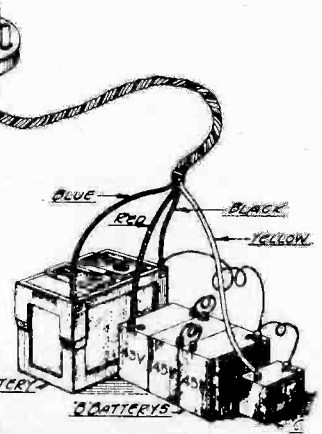

Diag. No.	Part No.	DESCRIPTION	
C1	22-305	2-95 MMFD PADDER	
C2	984	.0015 MFD	600V.
C3	485	.005 MFD	600V.
C4	199	.5 MFD	200V.
C5	487	.05 MFD	400V.
C6	486	.0018 MFD	600V.
C7	250	.05 MFD	200V.
C8	212	.05 MFD	400V.
C9	408	2-95 MMFD TRIMMER	
C10	289	90 MMFD	600V.
C11	188	.02 MFD	400V.
C12	182	.00025 MFD	600V.
C13	171	.05 MFD	600V.
C14	205	200-550 MFD PADDER	
C15	482	2 GANG VARIABLE COND.	
C16	455	.01 MFD	1200V.
C17	522	28-8 MFD DRY ELEC.	250V.
C18	492	.002 MFD	600V.
C19	245	.01 MFD. (TUBULAR)	400V.
C20	327	.02 MFD. (TUBULAR)	200V.
R1	65-293	9.90 M OHMS	1/4 W
R2	961	5 M OHMS	1/4 W
R3	389	40 M OHMS	1/4 W
R4	481	400 M OHMS	1/4 W
R5	541	1 MEGOHM VOL. CONT. & SW.	
R6	278	99 M OHMS	1/4 W
R7	521	50 M OHM TONE CONTROL	
R8	594	200 OHMS	1/2 W
R9	399	7.5 M OHMS	1/4 W
R10	400	250 M OHMS	1/4 W
R11	441	1 MEGOHM	1/4 W

Diag. No.	Part No.	DESCRIPTION
2	9-4735	ANTENNA COIL ASSEM.
3	95-558	1ST I.F. TRANSFORMER
4	95-559	2ND I.F. TRANSFORMER
5	9-4069	OSCILLATOR COIL ASSEM.
6	95-582	AUDIO TRANSFORMER
7	85-89	BAND SELECTOR SWITCH
8	190-8	VIBRATOR
9	95-581	POWER TRANSFORMER
10	92778	R.F. CHOKE
11	95-545	FILTER CHOKE
12	20-146	R.F. CHOKE

SPEAKER MODEL	
49-162—6" P.M.	5F-134
49-164—8" P.M.	5F-166

MODELS
5F134-5F166

I.F. FREQUENCY 456 K.C.
5 TUBE BATTERY SUPERHETERODYNE
CHASSIS No. 5518

ZENITH RADIO CORPORATION

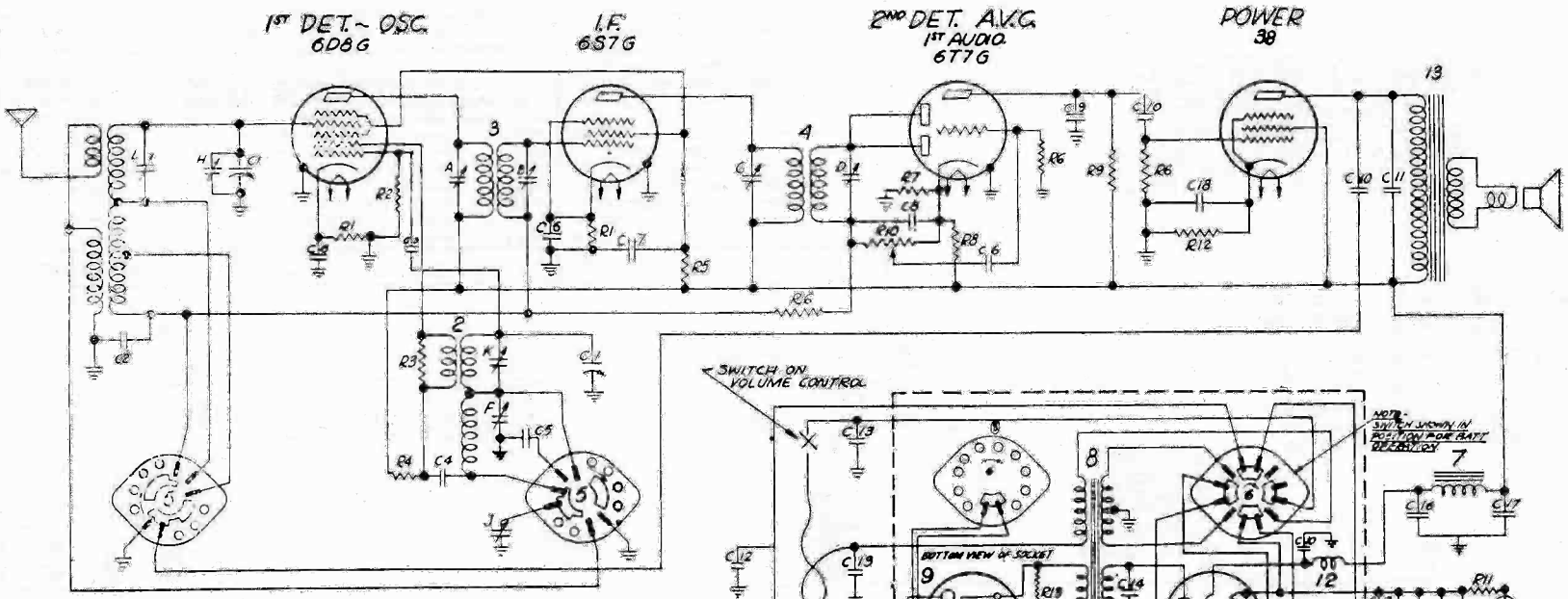

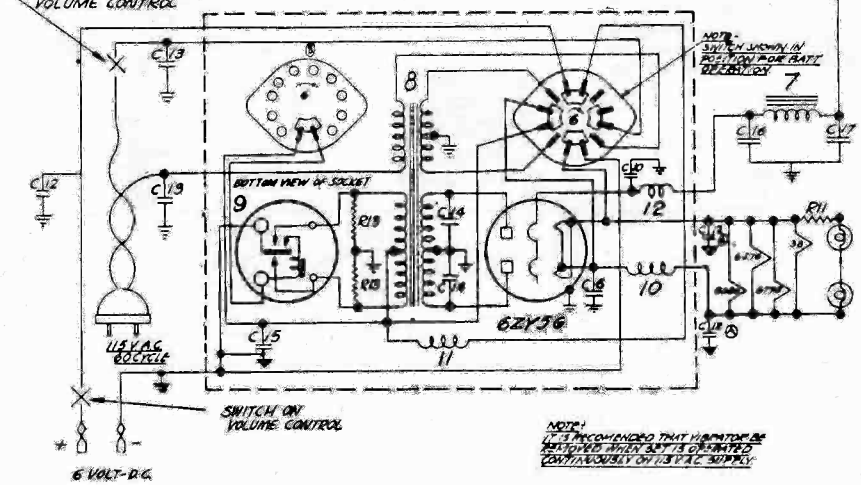

DIAG. NO.	PART NO.	DESCRIPTION	
C1	22-593	TWO GANG VARIABLE	
C2	22-487	.05 MFD.	400 V.
C3	22-289	50 MMFD.	600 V.
C4	22-358	.002 MFD.	600 V.
C5	22-563	FIXED PADDER	
C6	22-250	.05 MFD.	200 V.
C7	22-243	.01 MFD.	400 V.
C8	22-182	.00025 MFD.	600 V.
C9	22-147	.0005 MFD.	600 V.
C10	22-212	.05 MFD.	400 V.
C11	22-492	.002 MFD.	600 V.
C12	22-350	.25 MFD.	200 V.
C13	22-493	.02 MFD.	600 V.
C14	22-574	.02 MFD.	600 V.
C15	22-199	.5 MFD.	200 V.
C16	22-577	8 MFD. ELECTROLYTIC	250 V.
C17		8 MFD. "	250 V.
C18		10 MFD. "	25 V.

DIAG. NO.	PART NO.	DESCRIPTION	
R1	63-632	560 OHM	1/4 W ± 10
R2	63-593	47 M OHM	1/4 W ± 20
R3	63-589	10 M OHM	1/4 W ± 20
R4	63-150	10 M OHM	1/2 W ± 20
R5	63-681	56 M OHM	1/2 W ± 10
R6	63-271	1 MEGOHM	1/4 W ± 20
R7	63-634	820 OHM	1/4 W ± 10
R8	63-160	100 M OHM	1/2 W ± 10
R9	63-597	470 M OHM	1/4 W ± 20
R10	63-689	400 M OHM VOLUME CONTROL	
R11	63-533	13 OHM WIRE WOUND	
R12	63-418	1500 OHM	1/2 W ± 10
R13	63-577	100 OHM	1/4 W ± 20
1	5-5303	ANT. COIL & SHIELD ASSEMBLY	
2	5-4909	OSCILLATOR COIL ASSEMBLY	
3	95-443	1ST I.F. TRANSFORMER	
4	95-444	2ND I.F. TRANSFORMER	
5	85-104	BAND SELECTOR SWITCH	
6	85-425	POWER SUPPLY SWITCH	
7	95-298	POWER CHOKE	
8	95-485	POWER TRANSFORMER	
9	190-11	VIBRATOR	
10	5-2778	R.F. CHOKE ASSEMBLY	
11	5-5040	R.F. CHOKE ASSEMBLY	
12	20-82.	R.F. CHOKE	
13		SPEAKER TRANSFORMER	

VARIABLE TRIMMERS

A	1ST I.F. TRANSFORMER PRIMARY
B	1ST I.F. TRANSFORMER SECONDARY
C	2ND I.F. TRANSFORMER PRIMARY
D	2ND I.F. TRANSFORMER SECONDARY
F	BROADCAST OSCILLATOR (SEE NOTE)
H	ANTENNA BROADCAST (ON GANG)
J	#22-589 BROADCAST PADDER
K	SHORT WAVE OSCILLATOR (SEE NOTE)
L	SHORT WAVE DETECTOR (SEE NOTE)

NOTE— TRIMMERS F, K, & L MOUNTED ON BAKELITE STRIP #22-324

I.F. FREQUENCY 456 K.C.
5 TUBE BATTERY SUPERHETERODYNE
6 VOLT D.C. + 115 VOLT A.C.
CHASSIS No 5524

ZENITH RADIO CORP.

Models 5-J-217, 5-J-247, 5-J-255 (5524 Chassis)

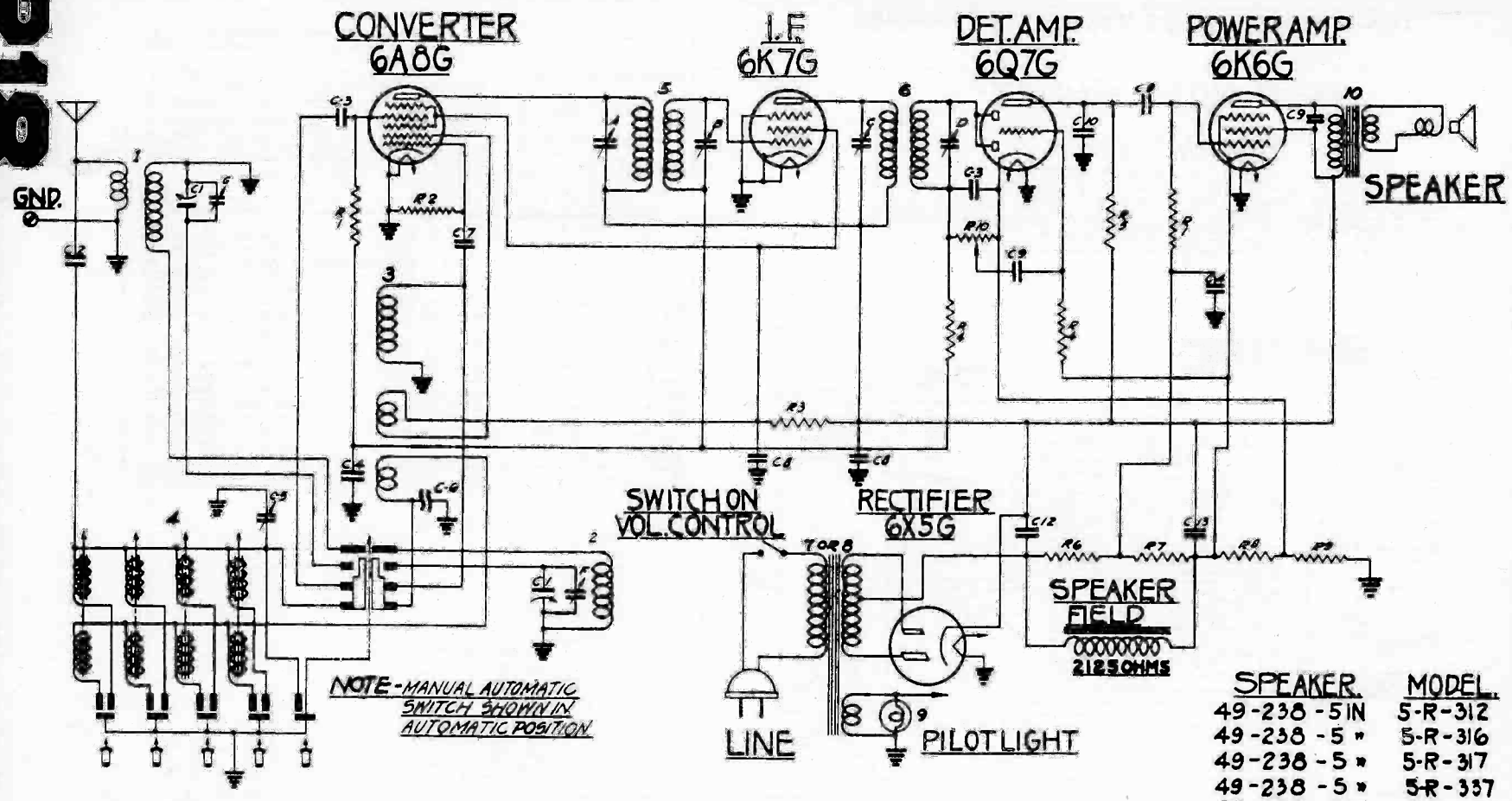

SPEAKER.	MODEL.
49-238-5 IN	5-R-312
49-238-5 "	5-R-316
49-238-5 "	5-R-317
49-238-5 "	5-R-337
49-238-5 "	5-R-303

DIAG. Nº	PART Nº	DESCRIPTION	
C-1	22-695	TWO GANG VAR. COND.	
C-2	22-209	50 M.M.F.D.	600V
C-3	22-162	.0001 MFD.	600V
C-4	22-250	.05 MFD.	200V
C-5	22-519	TRIMMER COND.	
C-6	22-729	COMPENSATING COND	
C-7	22-182	.00025 MFD.	600V
C-8	22-212	.05 MFD.	400V
C-9	22-196	.01 MFD.	600V
C-10	22-147	.0005 MFD	600V
C-12	22-691	8 MFD ELECTROLYTIC	450V
C-13	22-692	8 MFD. ELECTROLYTIC	350V

DIAG. Nº	PART Nº	DESCRIPTION	
R-1	63-597	470 M OHM	¼ W
R-2	63-593	47 M OHM	¼ W
R-3	63-208	12 M OHM	1 W
R-4	63-271	1 MEGOHM	¼ W
R-5	63-296	220 M OHM	¼ W
R-6	63-658	380 M OHM	¼ W
R-7	63-260	100 M OHM	¼ W
R-8	63-583	80 OHM WIRE WOUND	¼ W
R-9	63-686	150 OHM WIRE WOUND	½ W
R-10	63-955	220 M OHM VOL. CONT.	
1	5-5808	ANTENNA COIL ASSEM.	
2	5-6039	OSC. COIL ASSEM	
3	20-187	COMPENSATING COIL	

DIAG. Nº	PART Nº	DESCRIPTION
4		
5	95-513	1ST I.F. TRANS.
6	95-520	2ND I.F. TRANS.
7	95-521	POWER TRANS. (117V. 50-60~)
8	95-523	POWER TRANS. 25~
9	100-36	PILOT LIGHT .25A 6.3V.
10		SPEAKER TRANS
A		1ST I.F. TRANS PRI.
B		1ST I.F. TRANS SEC
C		2ND I.F. TRANS PRI
D		2ND I.F. TRANS SEC
F		BROADCAST OSC (IN GANG)
G		ANTENNA (BRD CAST IN GANG)

I.F. FREQUENCY 455 K.C.
5 TUBE SUPERHETERODYNE
CHASSIS Nº 5528 A.C.
ZENITH RADIO CORPORATION

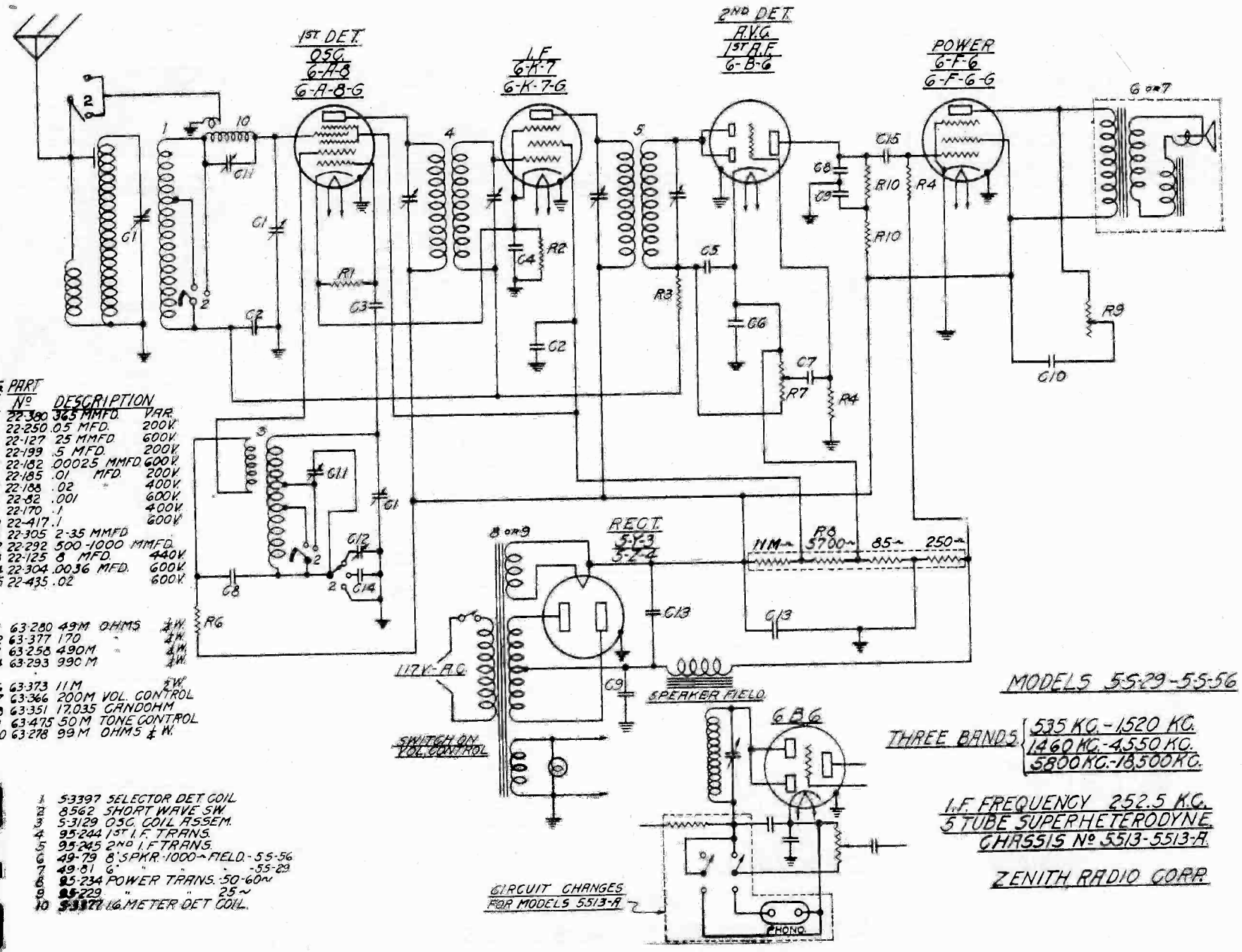

MFG. PART Nº	Nº	DESCRIPTION	
C1	22-380	365 MMFD.	VAR.
C2	22-250	.05 MFD.	200V.
C3	22-127	25 MMFD	600V.
C4	22-199	.5 MFD.	200V.
C5	22-182	.00025 MMFD	600V.
C6	22-185	.01 MFD.	200V.
C7	22-188	.02 "	400V.
C8	22-82	.001	600V.
C9	22-170	.1	400V.
C10	22-417	.1	600V.
C11	22-305	2-35 MMFD.	
C12	22-292	500-1000 MMFD.	
C13	22-125	8 MFD.	440V.
C14	22-304	.0036 MFD.	600V.
C15	22-435	.02	600V.

R1	63-280	49M OHMS	¼W.
R2	63-377	170 "	¼W.
R3	63-258	490M "	¼W.
R4	63-293	990 M "	¼W.
R6	63-373	11M	2W.
R7	63-366	200M VOL. CONTROL	
R8	63-351	17,035 GANDOHM	
R9	63-475	50M TONE CONTROL	
R10	63-278	99M OHMS	¼W.

1	5-3397	SELECTOR DET. COIL
2	8562	SHORT WAVE SW.
3	5-3129	OSC. COIL ASSEM.
4	95-244	1ST I.F. TRANS.
5	95-245	2ND I.F. TRANS.
6	49-79	8" SPKR. 1000~ FIELD. - 55-56
7	49-81	6" " " " -55-29
8	85-234	POWER TRANS. 50-60~
9	85-229	" " 25~
10	5-3172	1.6 METER DET. COIL.

MODELS 55-29 - 55-56

THREE BANDS { 535 KC. - 1520 KC. / 1460 KC. - 4550 KC. / 5800 KC. - 18,500 KC.

I.F. FREQUENCY 252.5 KC.
5 TUBE SUPERHETERODYNE
CHASSIS Nº 5513-5513-A.

ZENITH RADIO CORP.

Models 5-S-201, 5-S-218, 5-S-220, 5-S-228, 5-S-237, 5-S-250, 5-S-252
(5521 Chassis)

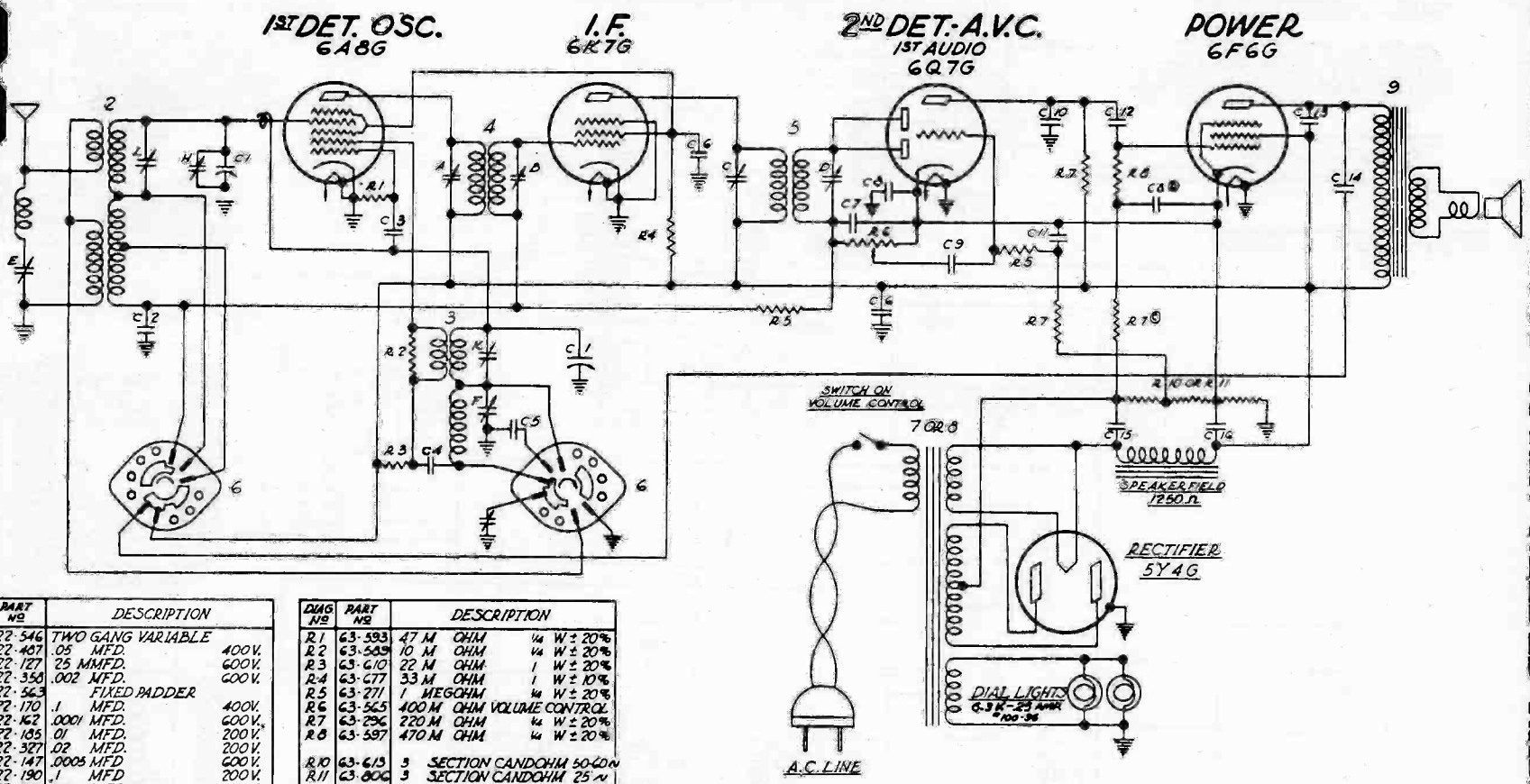

DIAG Nº	PART Nº	DESCRIPTION
C1	22-546	TWO GANG VARIABLE
C2	22-467	.05 MFD. 400V.
*C3	22-127	25 MMFD. 600V.
C4	22-358	.002 MFD. 600V.
C5	22-563	FIXED PADDER
C6	22-170	.1 MFD. 400V.
C7	22-162	.0001 MFD. 600V.
C8	22-185	.01 MFD. 200V.
C9	22-327	.02 MFD. 200V.
C10	22-147	.0005 MFD 600V.
C11	22-190	.1 MFD 200V.
C12	22-435	.02 MFD. 600V.
C13	22-492	.002 MFD. 600V.
C14	22-171	.05 MFD 600V.
C15	22-596	8 MFD DRY ELECTROLYTIC 450V
C16		14 MFD DRY ELECTROLYTIC 450V

VARIABLE TRIMMERS	
A	1ST I.F. TRANS. PRIMARY
B	1ST I.F. TRANS. SECONDARY
C	2ND I.F. TRANS. PRIMARY
D	2ND I.F. TRANS. SECONDARY
E	#22-570 WAVE TRAP
F	BROADCAST OSCILLATOR (SEE NOTE)
H	ANTENNA BROADCAST (ON GANG)
J	#22-519 BROADCAST PADDER
K	SHORT WAVE OSCILLATOR (SEE NOTE)
L	SHORT WAVE DETECTOR #22-905

* TRIMMERS F & K MOUNTED ON BAKELITE STRIP #22-408

DIAG Nº	PART Nº	DESCRIPTION
R1	63-593	47 M OHM ¼ W ± 20%
R2	63-589	10 M OHM ¼ W ± 20%
R3	63-610	22 M OHM 1 W ± 20%
R4	63-677	33 M OHM 1 W ± 10%
R5	63-271	1 MEGOHM ½ W ± 20%
R6	63-565	400 M OHM VOLUME CONTROL
R7	63-296	220 M OHM ½ W ± 20%
R8	63-597	470 M OHM ½ W ± 20%
R10	63-613	3 SECTION CANDOHM 50-60 ~
R11	63-800	3 SECTION CANDOHM 25 ~
1		WAVE TRAP COIL MOUNTED ON ANTENNA COIL ASSEMBLY
2	5-4934	ANT COIL & SHIELD ASSEMBLY
3	5-4905	OSCILLATOR COIL ASSEMBLY
4	95-407	1ST I.F. TRANSFORMER
5	95-408	2ND I.F. TRANSFORMER
6	85-104	BAND SELECTOR SWITCH
7	95-406	POWER TRANSFORMER 117 VOLT 50-60 CYCLE
8	95-452	POWER TRANSFORMER ALL VOLTAGE 25 CYCLE
9		SPEAKER TRANSFORMER

MODEL	SPEAKER	
5-S-218	49-178	5"
5-S-220	49-178	5"
5-S-228	49-178	5"
5-S-237	49-180	6"
5-S-250	49-179	8"
5-S-252	49-208	10"

I.F.-FREQUENCY 456 K.C.
5 TUBE SUPERHETERODYNE
2 BAND
CHASSIS Nº 5521

ZENITH RADIO CORP.

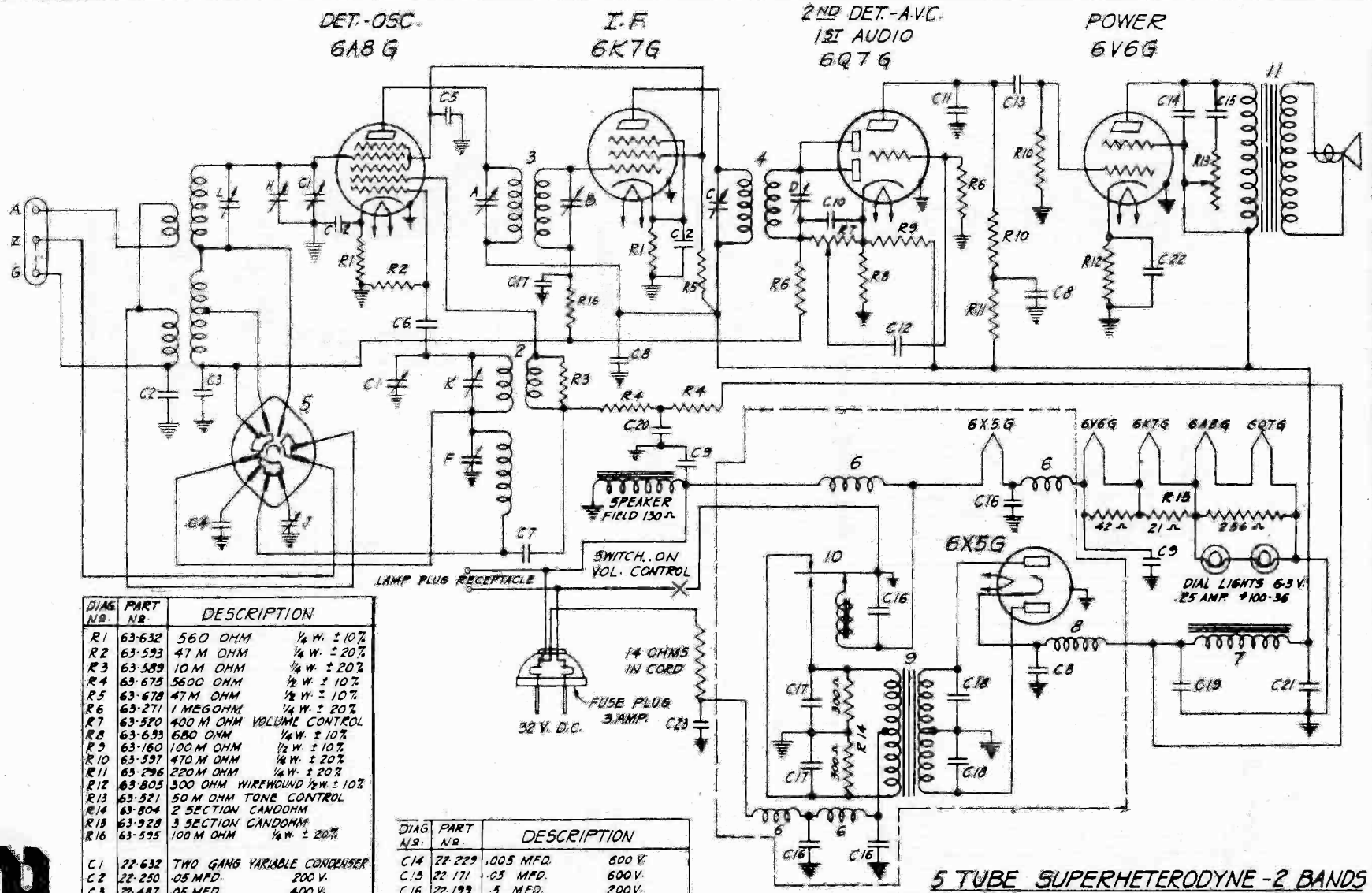

DIAG. NO.	PART NO.	DESCRIPTION	
R1	63-632	560 OHM	¼ W. ± 10%
R2	63-593	47 M OHM	¼ W. ± 20%
R3	63-589	10 M OHM	¼ W. ± 20%
R4	63-675	5600 OHM	½ W. ± 10%
R5	63-678	47 M OHM	½ W. ± 10%
R6	63-271	1 MEGOHM	¼ W. ± 20%
R7	63-520	400 M OHM	VOLUME CONTROL
R8	63-693	680 OHM	¼ W. ± 10%
R9	63-160	100 M OHM	½ W. ± 10%
R10	63-597	470 M OHM	¼ W. ± 20%
R11	63-296	220 M OHM	¼ W. ± 20%
R12	63-805	300 OHM WIREWOUND	½ W. ± 10%
R13	63-521	50 M OHM TONE CONTROL	
R14	63-804	2 SECTION CANDOHM	
R15	63-928	3 SECTION CANDOHM	
R16	63-595	100 M OHM	¼ W. ± 20%
C1	22-632	TWO GANG VARIABLE CONDENSER	
C2	22-250	.05 MFD.	200 V.
C3	22-487	.05 MFD.	400 V.
C4	22-563	FIXED PADDER	
C5	22-212	.05 MFD.	400 V.
C6	22-127	25 MMFD.	600 V.
C7	22-358	.002 MFD.	600 V.
C8	22-170	.1 MFD.	400 V.
C9	22-350	.25 MFD.	200 V.
C10	22-162	.0001 MFD.	600 V.
C11	22-147	.0005 MFD.	600 V.
C12	22-327	.02 MFD.	200 V.
C13	22-435	.02 MFD.	600 V.

DIAG. NO.	PART NO.	DESCRIPTION	
C14	22-229	.005 MFD.	600 V.
C15	22-171	.05 MFD.	600 V.
C16	22-199	.5 MFD.	200 V.
C17	22-185	.01 MFD.	200 V.
C18	22-646	.1 MFD.	1000 V.
C19	22-647	8 MFD. DRY ELECT.	450 V.
C20		8 MFD. DRY ELECT.	450 V.
C21	22-648	16 MFD. DRY ELECT.	450 V.
C22		10 MFD. DRY ELECT.	25 V.
C23	22-243	.01 MFD.	400 V.

5 TUBE SUPERHETERODYNE - 2 BANDS

I.F. FREQUENCY - 456 K.C.

32 V. D.C. CHASSIS No. 5523

ZENITH RADIO CORPORATION

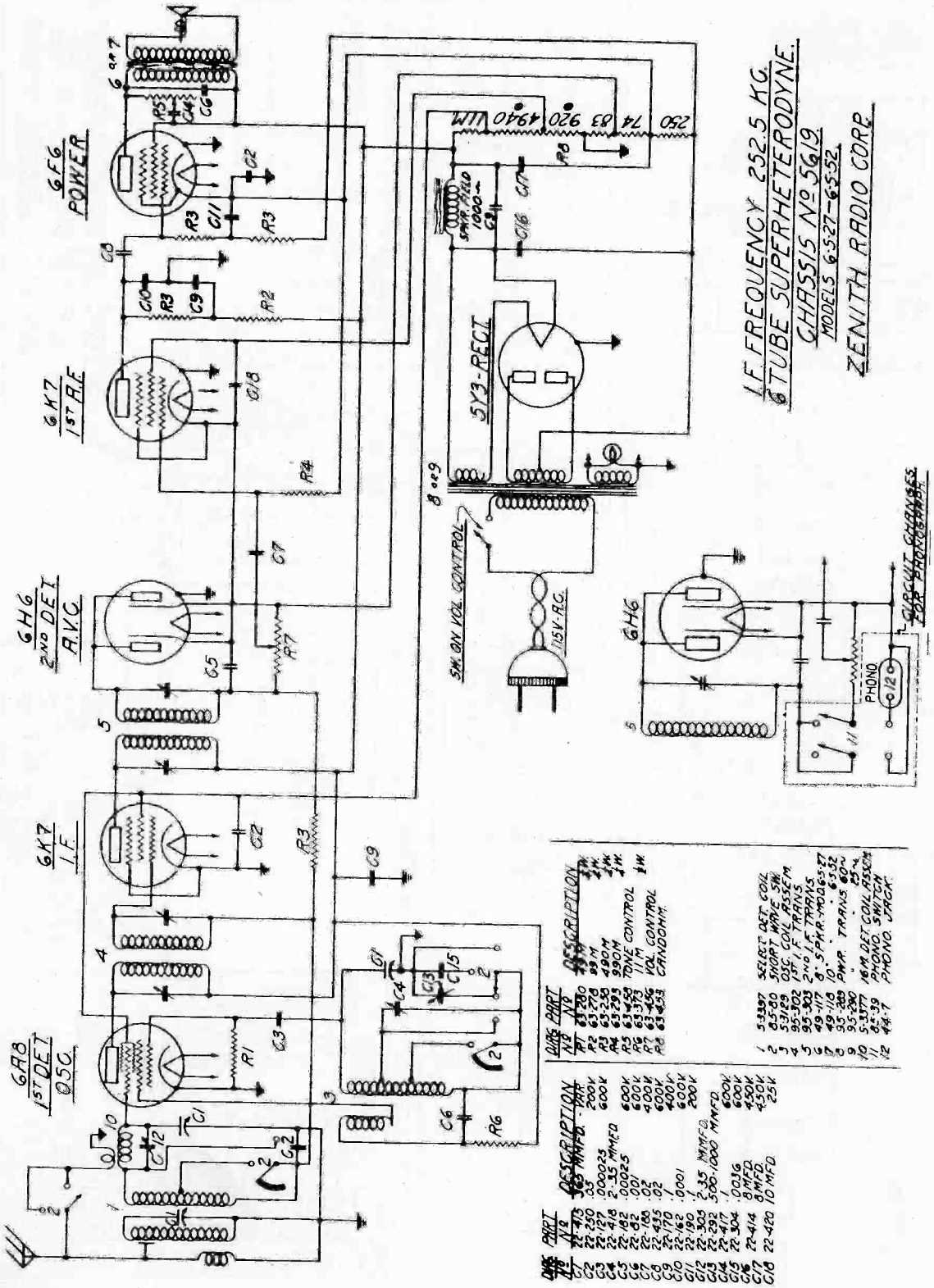
6AB
1ST DET
OSC.
6K7
I.F.
6H6
2ND DET
A.V.C.
6K7
1ST A.F.
6F6
POWER
5Y3-RECT.
6H6
I.F. FREQUENCY 252.5 KC.
6 TUBE SUPERHETERODYNE.
CHASSIS Nº 5619
MODELS 6S27-6S52
ZENITH RADIO CORP.
SW. ON VOL. CONTROL
115V-A.C.
PHONO
SPKR. FIELD 1600~
1940
920
83
74
250
DWG. REF. NO.
PART NO.
DESCRIPTION
1 53397 SEL. RECT. DET. COIL
2 63-80 SHORT WAVE SW.
3 63-80 OSC. COIL ASSEM.
4 95-802 2ND I.F. TRANS.
5 95-803 1ST I.F. TRANS.
6 49-112 8" SPKR. MODEL 6S-27
7 95-280 PWR. TRANS. 60~
8 95-380 " " 25~
9 53377 16 M. DET. COIL ASSEM.
10 65-39 PHONO SWITCH
11 44-7 PHONO JACK
12 44-7
DWG. REF. NO.
PART NO.
DESCRIPTION
C1 22-113 .5 MMFD.
C2 22-130 .00025
C3 22-128 2.35 MMFD.
C4 22-112 .00025
C5 22-182 .001
C6 22-188 .02
C7 22-135 .02
C8 22-170 .001
C9 22-160 .1
C10 22-190 2.35 MMFD.
C11 22-305 500-1000 MMFD.
C12 22-292 1
C13 22-417 .003G
C14 22-304 8 MFD.
C15 22-414 8 MFD.
C16 22-420 10 MFD.
C17
C18
R1 PAR. 200V
R2 600V
R3 600V
R4 600V
R5 400V
R6 600V
R7 200V
R8 600V
R9 450V
R10 450V
R11 25V
R1 63280 4W
R2 63270 1W
R3 63-230 1W
R4 63293 990M
R5 63-459 TONE CONTROL 1W
R6 63373 11M VOL. CONTROL
R7 63-456 CANDOHM
R8 63433

Models 6-S-128, 6-S-137, 6-S-147, 6-S-152, 6-S-157. (Chassis No. 5634)

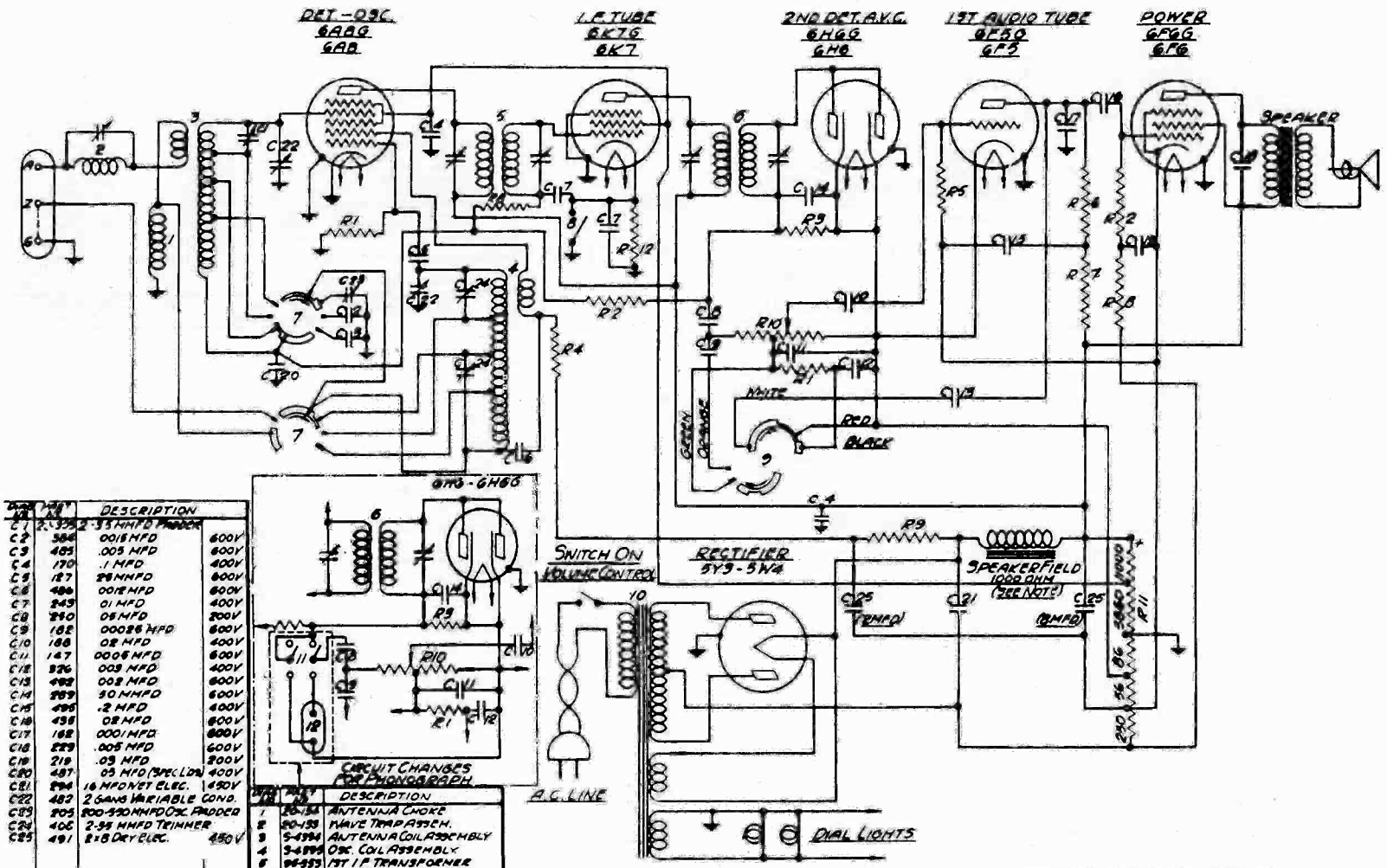

Part No.	Part No.	DESCRIPTION	
C1	2,375	2-35 MMFD TRIMMER	
C2	584	.0015 MFD	600V
C3	485	.005 MFD	600V
C4	170	.1 MFD	400V
C5	127	25 MMFD	600V
C6	486	.001 MFD	600V
C7	249	.01 MFD	400V
C8	250	.05 MFD	200V
C9	162	.00025 MFD	600V
C10	168	.02 MFD	400V
C11	147	.0006 MFD	600V
C12	326	.003 MFD	400V
C13	482	.002 MFD	600V
C14	269	50 MMFD	600V
C15	495	.2 MFD	400V
C16	498	.02 MFD	600V
C17	162	.0001 MFD	600V
C18	229	.005 MFD	600V
C19	219	.03 MFD	200V
C20	487	.03 MFD (SPEC. LOW)	400V
C21	294	16 MFD NET ELEC.	450V
C22	483	2 GANG VARIABLE COND.	
C23	205	200-530 MMFD OSC. PADDER	
C24	406	2-35 MMFD TRIMMER	
C25	491	8+8 DRY ELEC.	450V
R1	25,300	40 M OHMS	1/4 W
R2	299	990 M OHMS	1/4 W
R3	481	400 M OHMS	1/4 W
R4	373	11 M OHMS	1/2 W
R5	629	2 MEGOHM	1/4 W
R6	298	490 M OHMS	1/4 W
R7	376	190 M OHMS	1/4 W
R8	278	99 M OHMS	1/4 W
R9	363	19 M OHMS	1/2 W
R10	322	2 MEGOHM VOL. CONTROL & SW.	
R11	819	CANDOHM RESITOR	
R12	261	6900 OHMS	1/4 W

Part No.	Part No.	DESCRIPTION
1	25-154	ANTENNA CHOKE
2	90-133	WAVE TRAP ASSEM.
3	5-4994	ANTENNA COIL ASSEMBLY
4	5-4995	OSC. COIL ASSEMBLY
5	95-553	1ST I.F. TRANSFORMER
6	95-554	2ND I.F. TRANSFORMER
7	85-90	BAND SELECT SWITCH
8	85-91	SENSITIVITY CONTROL
9	85-92	TONE CONTROL SWITCH
10	95-289	POWER TRANS. 115V-50-60 CYCLE
	95-290	POWER TRANS. 25 CYCLE ALL VOLT
11	85-89	PHONO. SWITCH
12	44-7	PHONO. JACK

NOTE — *Replace 22-518 16 MFD DRY ELEC. Replace *22-294 NET ELEC. IN MODEL 6S-147 2ND TABLE.

SPEAKERS	MODELS
49-117-8"	6S-128
	6S-137
49-118-10"	6S-147
	6S-152
	6S-157

I.F. FREQUENCY 456 K.C.
6 TUBE SUPERHETERODYNE - 3 BAND
CHASSIS No 5634

ZENITH RADIO CORPORATION
CHICAGO, ILLINOIS

Models 6-S-203, 6-S-222, 6-S-223, 6-S-229, 6-S-239, 6-S-241 (5638 Chassis)

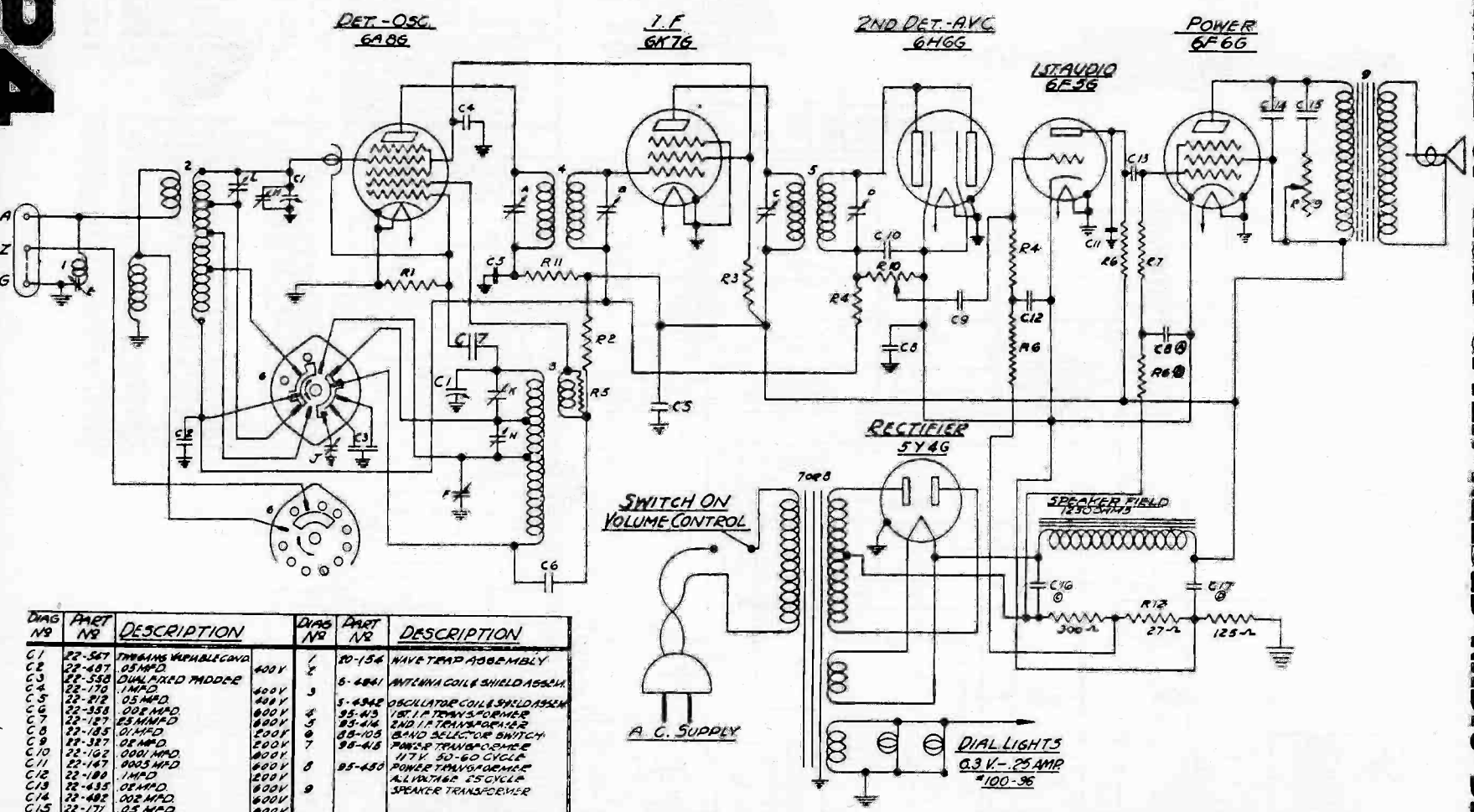

DIAG Nº	PART Nº	DESCRIPTION		DIAG Nº	PART Nº	DESCRIPTION
C1	22-567	TWO GANG VARIABLE COND.		1	20-154	WAVE TRAP ASSEMBLY
C2	22-487	.05 MFD.	400 V	2		
C3	22-558	DUAL FIXED PADDER			6-4841	ANT. & WAVE COIL & SHIELD ASSEM.
C4	22-170	.1 MFD.	400 V	3		
C5	22-212	.05 MFD.	400 V		5-4942	OSCILLATOR COIL & SHIELD ASSEM.
C6	22-358	.002 MFD.	600 V	4	95-413	1ST I.F. TRANSFORMER
C7	22-127	.25 MFD.	600 V	5	95-414	2ND I.F. TRANSFORMER
C8	22-185	.01 MFD.	200 V	6	85-105	BAND SELECTOR SWITCH
C9	22-387	.02 MFD.	200 V	7	95-415	PHASE TRANSFORMER
C10	22-162	.0001 MFD.	400 V			117 V. 50-60 CYCLE
C11	22-147	.0005 MFD.	600 V	8	95-450	POWER TRANSFORMER
C12	22-180	.1 MFD.	200 V			ALL VOLTAGE 25 CYCLE
C13	22-435	.02 MFD.	600 V	9		SPEAKER TRANSFORMER
C14	22-482	.002 MFD.	600 V			
C15	22-171	.05 MFD.	600 V			
C16	22-596	8 MFD. DRY ELECTROLYTIC	450 V			
C17		16 MFD. DRY ELECTROLYTIC	450 V			VARIABLE TRIMMERS
R-1	63-585	47 M OHMS	1/4 W.	A		1ST I.F. TRANSF. PRIMARY
R-2	63-680	1.0 M OHMS	1/2 W.	B		1ST I.F. TRANSF. SECONDARY
R-3	63-677	3.3 M OHMS	1/2 W.	C		2ND I.F. TRANSF. PRIMARY
R-4	63-771	1.5 MEGOHMS	1/2 W.	D		2ND I.F. TRANSF. SECONDARY
R-5	63-587	4700 OHMS	1/2 W.	E		WAVE TRAP
R-6	63-696	220 M OHMS	1/2 W.	F		BROADCAST OSCILLATOR (SEE NOTE)
R-7	63-587	470 M OHMS	1/2 W.	H		ANT. BROADCAST - ON GANG
R-8	63-521	50 M OHMS TONE CONTR.		J	22-519	BROADCAST PADDER
R-10	63-520	100 M OHMS VOLUME CONT.		K		SHORT WAVE OSCILLAT. (SEE NOTE)
R-11	63-605	1000 OHMS	1/2 W.	L	22-305	SHORT WAVE DETECTOR
R-12	63-613	3 SECTION CONDOHM		N		POLICE BAND OSCILLATOR (SEE NOTE)

I.F. FREQUENCY 456 K.C.
6 TUBE SUPERHETERODYNE - 3 BANDS
CHASSIS Nº 5638

ZENITH RADIO CORPORATION

Models 6-S-254, 6-S-256 (5644 Chassis)

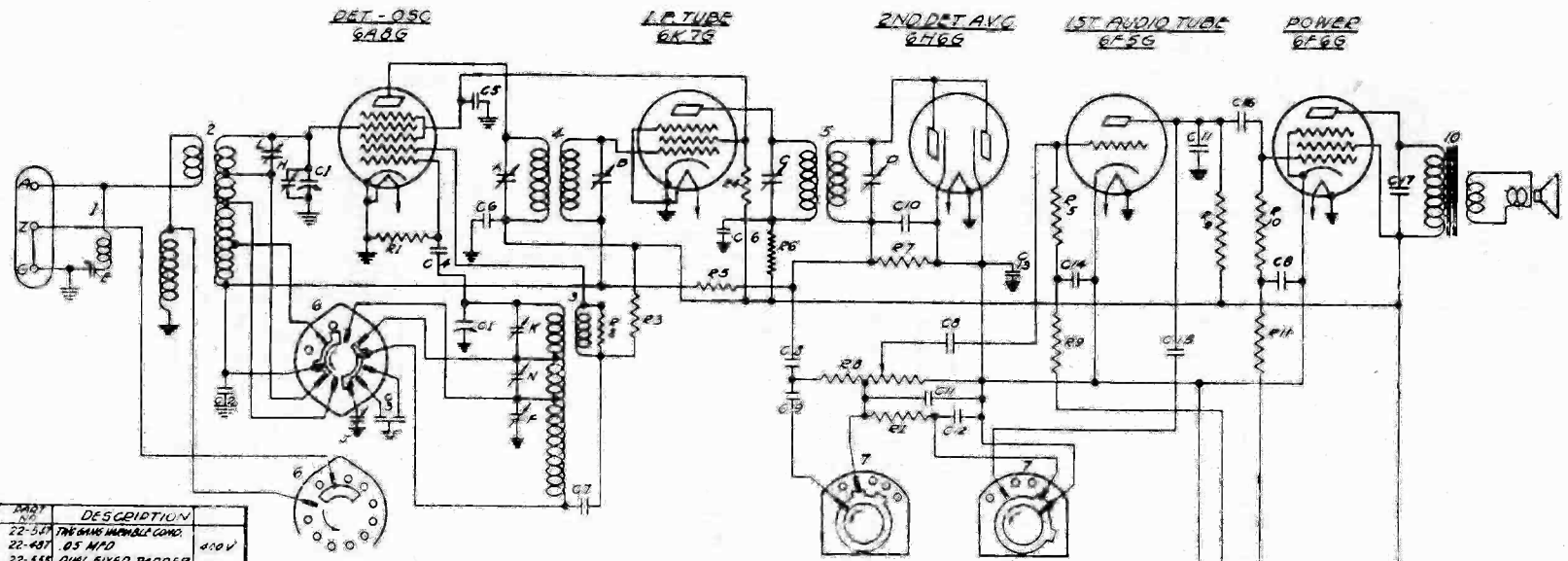

DIAG. NO.	PART NO.	DESCRIPTION	
C1	22-537	TWO GANG VARIABLE COND.	
C2	22-497	.05 MFD	400V
C3	22-555	DUAL FIXED PADDER	
C4	22-127	25 MMFD	600V
C5	22-170	1 MFD	200V
C6	22-212	.05 MFD	400V
C7	22-359	.002 MFD	600V
C8	22-327	.02 MFD	200V
C9	22-182	.0005 MFD	600V
C10	22-162	.0001 MFD	600V
C11	22-147	.0005 MFD	600V
C12	22-326	.005 MFD	400V
C13	22-183	.01 MFD	200V
C14	22-190	1 MFD	200V
C15	22-449	.004 MFD	600V
C16	22-435	.02 MFD	600V
C17	22-492	.002 MFD	600V
C18	22-551	16 MFD ELECTROL COND.	400V
C19	22-552	20 MFD ELECTROL COND.	300V
R-1	63-593	47 OHM	1/4W ±10
R-2	63-567	4700 OHM	1/4W ±20
R-3	63-680	10 MOHM	1/2W ±20
R-4	63-677	33 MOHM	1/2W ±10
R-5	63-271	1 MEGOHM	1/4W ±20
R-6	63-605	1000 OHM	1/2W ±20
R-7	63-658	390 MOHM	1/4W ±10
R-8	63-799	2 MEGOHM VOLUME CONTROL	
R-9	63-296	220 MOHM	1/4W ±20
R-10	63-597	470 MOHM	1/4W ±20
R-11	63-325	150 MOHM	1/4W ±20
R-12	63-613	3 SECTION CANDOHM	
1	20-154	WAVE TRAP ASSEMBLY	
2	S-5073	ANT COIL & SHIELD ASSEM.	
3	S-5074	OSCIL COIL & SHIELD ASSEM.	
4	95-416	1ST I.F. TRANSFORMER	
5	95-417	2ND I.F. TRANSFORMER	
6	85-113	BAND SELECTOR SWITCH	
7	85-104	TONE CONTROL SWITCH	
8	95-438	POWER TRANSF. 117V 50-60 CYCLE	
9	95-454	POWER TRANSF. ALL-WAT. 25 CYCLE	
10		SPEAKER TRANSFORMER	

DIAG. NO.	PART NO.	DESCRIPTION
		VARIABLE TRIMMERS
A		1ST I.F. TRANSF. PRIMARY
B		1ST I.F. TRANSF. SECONDARY
C		2ND I.F. TRANSF. PRIMARY
D		2ND I.F. TRANSF. SECONDARY
E		WAVE TRAP
F		BROADCAST OSCIL. (SEE NOTE)
H		ANTENNA BROADCAST (ON GANG)
J	22-519	BROADCAST PADDER
K		SHORT WAVE OSCIL. (SEE NOTE)
L	22-305	SHORT WAVE DETECTOR
N		POLICE BAND OSCIL. (SEE NOTE)

NOTE:-
TRIMMERS F-K & N
MOUNTED ON BAKELITE
STRIP PART NO. 22-324

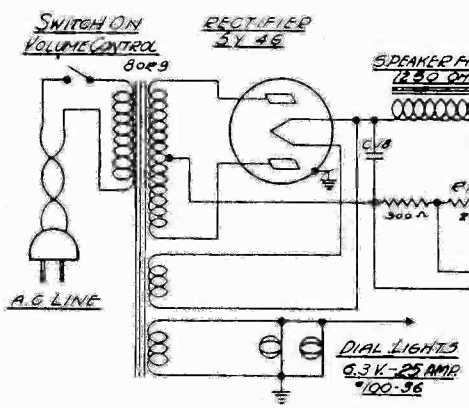

SPEAKERS	MODELS
49-208-10"	6-S-254
49-181-10"	6-S-256

I.F. FREQUENCY 456 KC
6 TUBE SUPERHETERODYNE - 3 BAND
CHASSIS No 5644

ZENITH RADIO CORPORATION

ZENITH

3 BAND { 550 KC. - 1780 KC. / 2100 KC. - 6800 KC. / 7000 KC. - 23000 KC. }

I.F. FREQUENCY 456 KC.
6 TUBE BATTERY SUPERHETERODYNE
CHASSIS Nº 5621

MODELS - 6V27, 6V62

ZENITH RADIO CORP.

DIAG. NO.	PART NUMBER	DESCRIPTION		
R1	63-278	9.9 M	OHMS	1/4 W.
R2	63-361	5 M	"	1/4 W.
R3	63-362	400	"	1/4 W.
R4	63-280	49 M	"	1/4 W.
R5	63-353	19 M	"	1/2 W.
R6	63-293	990 M	"	1/4 W.
R7	63-290	260 M	"	1/4 W.
R8	63-258	490 M	"	1/8 W.
R9	63-272	4 M	"	1/4 W.
R10	63-238	1 M	"	1/4 W.
R11	63-260	100 M	"	1/4 W.
R12	63-477	100	FLEXIBLE WIRE WOUND	
R13	63-394	200	OHMS	1/2 W.
R14	63-456	200 M	VOL. CONTROL & SWITCH	
R15	63-458	50 M	TONE CONTROL	
C1	22-243	.01	MFD.	400 V.
C2	22-410	.003	"	600 V.
C3	22-250	.05	"	200 V.
C4	22-289	50	MMFD.	600 V.
C5	22-188	.02	MFD.	400 V.
C6	22-411	.0023	"	600 V.
C7	22-345	.0011	"	600 V.
C8	22-203	200-350	MMFD. PADDER	

DIAG. NO.	PART NUMBER	DESCRIPTION		
C9	22-408	2-35 MMFD. PADDER		
C10	22-82	.001	MFD.	600 V.
C11	22-212	.05	"	400 V.
C12	22-182	.00025	"	600 V.
C13	22-224	.1	"	300 V.
C14	22-225	5	"	25 V.
C15	22-437	.01	"	1400 V.
C16	22-228	.5	"	300 V.
C17	22-251	.5	"	200 V.
C18	22-432	8	"	250 V.
C19		2	"	
C20	22-409	456 MMF. VAR. COND.		
1	5-3697	ANT. COIL ASSEM.		
2	5-3698	DET. COIL ASSEM.		
3	5-3699	OSC. COIL ASSEM.		
4	20-82	ANT. CHOKE		
5	20-88	R.F. CHOKE		
6	20-119	R.F. PLATE CHOKE		
7	3-2778	R.F. CHOKE		
8	85-78	BAND SELECTOR SWITCH		
9	95-291	1ST. I.F. TRANS.		
10	95-292	2ND. I.F. TRANS.		
11	95-298	POWER CHOKE		
12	95-305	RECTIFIER TRANS.		
13	95-311	AUDIO TRANS.		
14	49-132	8" MAG. SPEAKER	MOD. 6V27	
15	49-134	12" DYN. " "	MOD. 6V62	

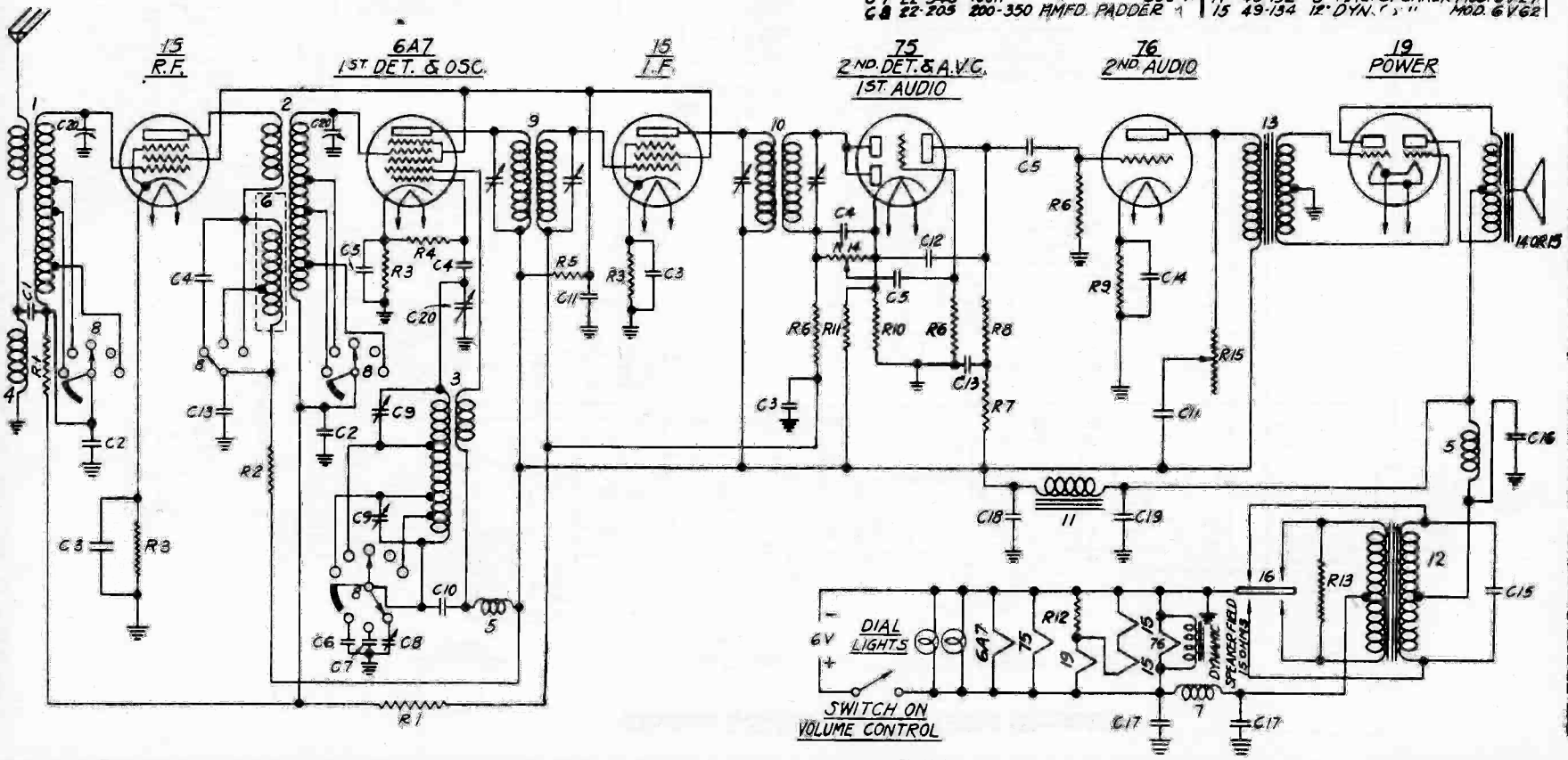

226

COMPILED BY M. N. BEITMAN, SUPREME PUBLICATIONS

CIRCUIT DIAGRAM—Models 7-D-119, 7-D-126, 7-D-127, 7-D-138, 7-D-151, 7-D-148, 7-D-162, 7-D-168. (Chassis No. 5707)

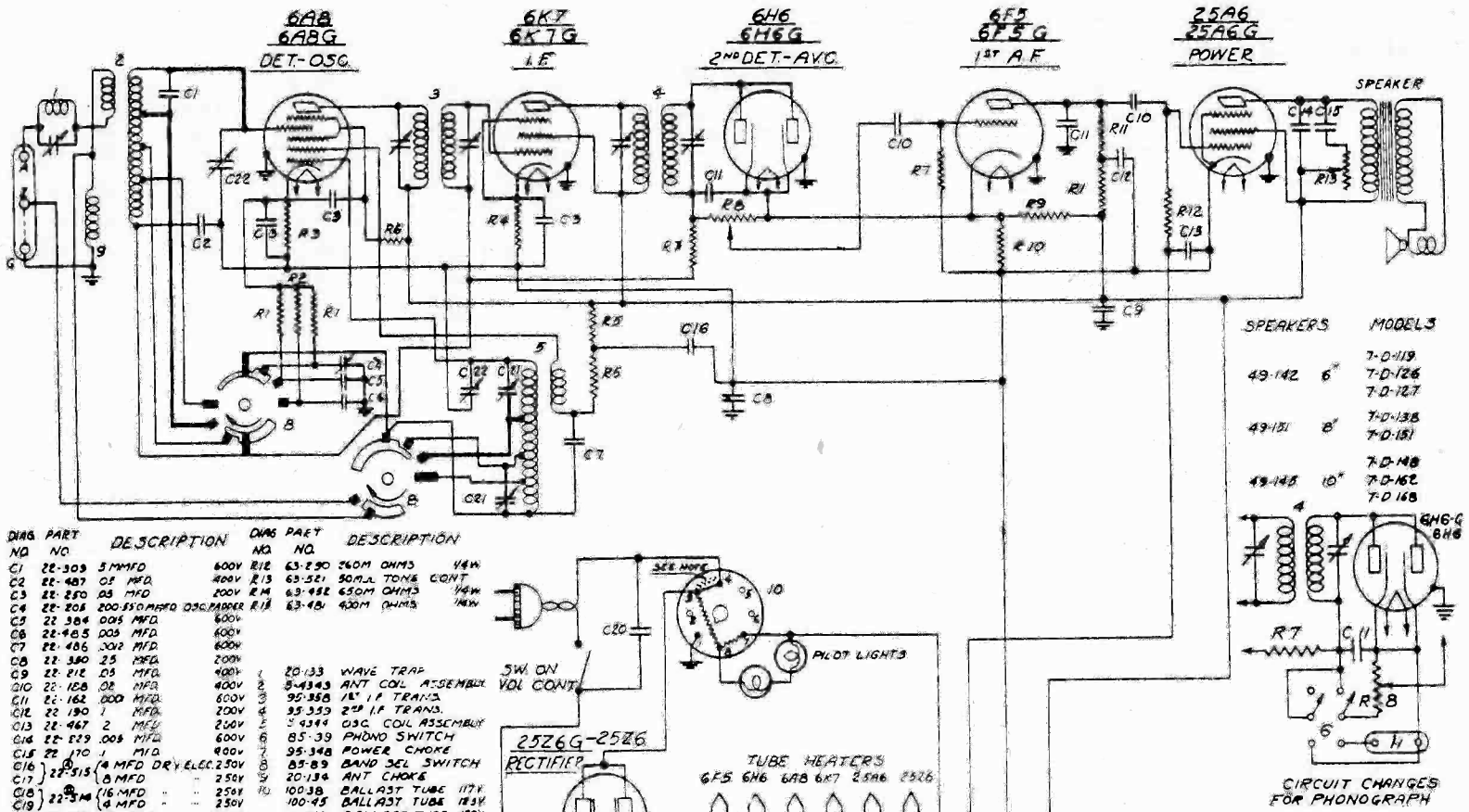

DIAG. NO.	PART NO.	DESCRIPTION	
C1	22-309	5 MMFD	600V
C2	22-487	.05 MFD.	400V
C3	22-250	.05 MFD	200V
C4	22-206	200-550 MMFD OSC. PADDER	
C5	22-384	.005 MFD.	600V
C6	22-485	.005 MFD.	600V
C7	22-486	.002 MFD.	600V
C8	22-380	.25 MFD.	200V
C9	22-212	.05 MFD.	400V
C10	22-128	.02 MFD.	400V
C11	22-162	.000 MFD.	600V
C12	22-190	1 MFD.	200V
C13	22-467	2 MFD.	250V
C14	22-229	.005 MFD.	600V
C15	22-170	.1 MFD.	400V
C16	22-515	4 MFD DRY ELEC.	250V
C17		8 MFD " "	250V
C18	22-514	16 MFD " "	250V
C19		4 MFD " "	250V
C20	22-455	.01 MFD.	1200V
C21	22-408	2-35 MMFD. TRIMMER	
C22	22-482	VARIABLE	

DIAG. NO.	PART NO.	DESCRIPTION	
R12	63-290	260M OHMS	1/4W
R13	63-521	50M.Ω TONE CONT.	
R14	63-482	650M OHMS	1/4W
R15	63-481	430M OHMS	1/4W

DIAG. NO.	PART NO.	DESCRIPTION
1	20-133	WAVE TRAP
2	8-4343	ANT COIL ASSEMBLY
3	95-358	1ST I.F. TRANS.
4	95-359	2ND I.F. TRANS.
5	5-4344	OSC. COIL ASSEMBLY
6	85-39	PHONO SWITCH
7	95-348	POWER CHOKE
8	85-89	BAND SEL. SWITCH
9	20-134	ANT CHOKE
10	100-38	BALLAST TUBE 117V.
	100-45	BALLAST TUBE 183V.
	100-46	BALLAST TUBE 150V.
	100-47	BALLAST TUBE 200V.
	100-48	BALLAST TUBE 220V.
	100-49	BALLAST TUBE 250V.
11	44-7	PHONO JACK

R1	63-278	99M OHMS	1/4W
R2	63-280	49M OHMS	1/4W
R3	63-362	100 OHMS	1/4W
R4	63-357	300 OHMS	1/4W
R5	63-361	5M OHMS	1/4W
R6	63-288	19M OHMS	1/4W
R7	63-293	990M OHMS	1/4W
R8	63-520	400M.Ω VOL. CONT.	
R9	63-442	50M OHMS	1/4W
R10	63-318	530 OHMS	1/4W
R11	63-376	190M OHMS	1/4W

NOTE:- PINS 3 & 4 SHORT CIRCUITED INTERNALLY IN "100-38", "100-45" AND "100-46" ONLY

Models 7-S-204, 7-S-232, 7-S-240, 7-S-242, 7-S-258, 7-S-260, 7-S-261 (5709 Chassis)

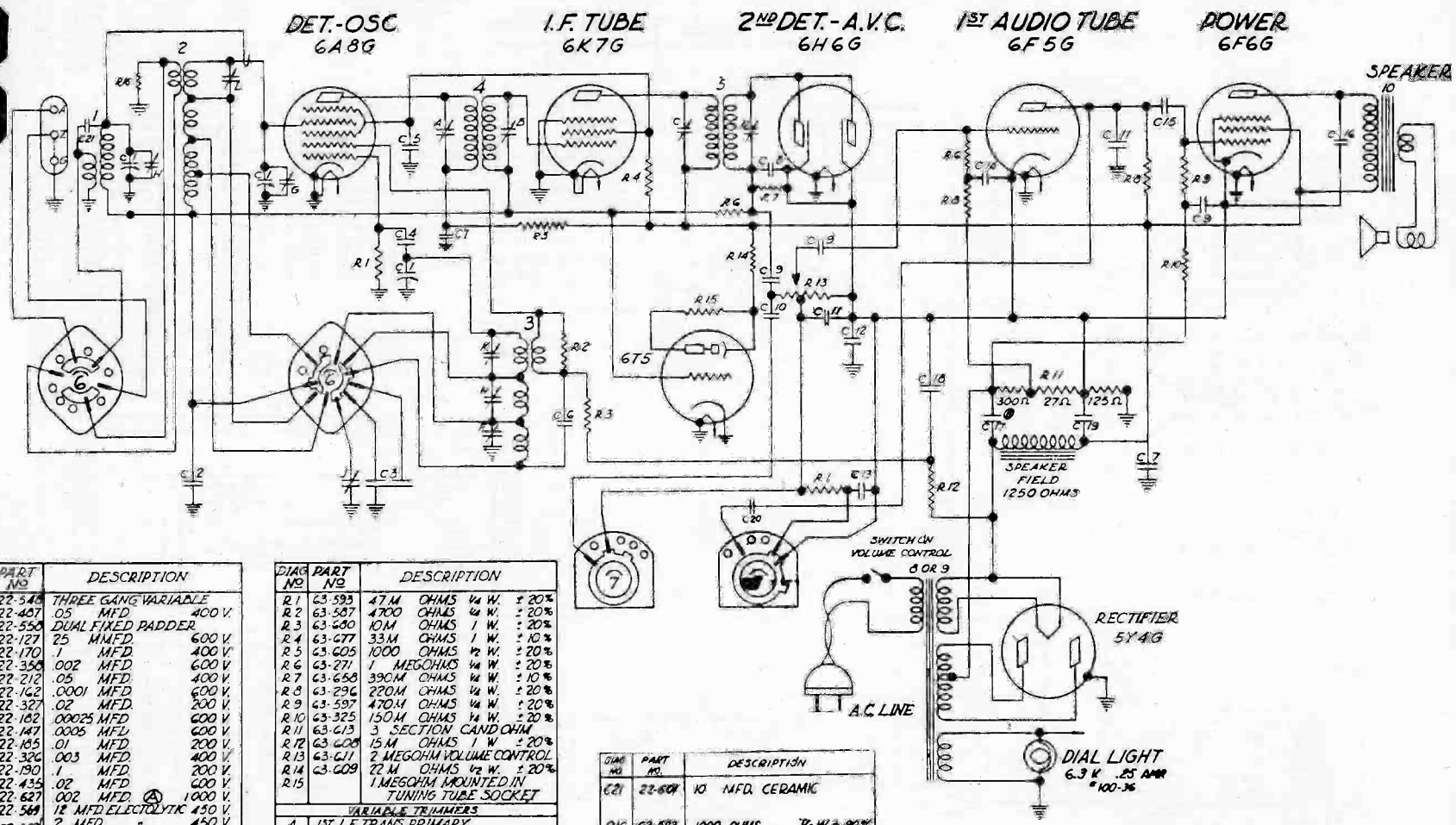

DIAG Nº	PART Nº	DESCRIPTION
C1	22-548	THREE GANG VARIABLE
C2	22-487	.05 MFD 400 V.
C3	22-558	DUAL FIXED PADDER
C4	22-127	25 MMFD. 600 V.
C5	22-170	.1 MFD. 400 V.
C6	22-358	.002 MFD. 600 V.
C7	22-212	.05 MFD. 400 V.
C8	22-142	.0001 MFD. 600 V.
C9	22-327	.02 MFD. 200 V.
C10	22-182	.00025 MFD 600 V.
C11	22-147	.0005 MFD. 600 V.
C12	22-185	.01 MFD 200 V.
C13	22-326	.003 MFD. 400 V.
C14	22-190	.1 MFD. 200 V.
C15	22-435	.02 MFD 600 V.
C16	22-627	.002 MFD. Ⓐ 1000 V.
C17	22-569	12 MFD ELECTOLYTIC 450 V.
C18	22-562	2 MFD. " 450 V.
C19		16 MFD. " 450 V.
C20	22-448	.001 MFD. 600 V.
1	3-4780	ANTENNA COIL ASSEMBLY
2	3-5054	DETECTOR COIL & SHIELD ASSEM.
3	3-4969	OSCILLATOR COIL & SHIELD ASSEM.
4	95-416	1ST I.F. TRANS.
5	95-417	2ND I.F. TRANS.
6	85-110	BAND SELECTOR SWITCH
7	85-108	TONE CONTROL SWITCH
8	95-418	POWER TRANS-117V 50-60 CYCLE
9	95-451	POWER TRANS-ALL VOLTAGE 25 CYCLE
10		SPEAKER TRANSFORMER

DIAG Nº	PART Nº	DESCRIPTION
R1	63-593	47 M OHMS 1/4 W. ± 20%
R2	63-587	4700 OHMS 1/4 W. ± 20%
R3	63-680	10 M OHMS 1 W. ± 20%
R4	63-677	33 M OHMS 1 W. ± 10%
R5	63-605	1000 OHMS 1/2 W. ± 20%
R6	63-271	1 MEGOHMS 1/4 W. ± 20%
R7	63-658	390 M OHMS 1/4 W. ± 10%
R8	63-296	220 M OHMS 1/4 W. ± 20%
R9	63-597	470 M OHMS 1/4 W. ± 20%
R10	63-325	150 M OHMS 1/4 W. ± 20%
R11	63-613	3 SECTION CAND OHM
R12	63-608	15 M OHMS 1 W ± 20%
R13	63-611	2 MEGOHM VOLUME CONTROL
R14	63-609	22 M OHMS 1/2 W. ± 20%
R15		1 MEGOHM MOUNTED IN TUNING TUBE SOCKET

VARIABLE TRIMMERS	
A	1ST I.F. TRANS PRIMARY
B	1ST I.F. TRANS SECONDARY
C	2ND I.F. TRANS PRIMARY
D	2ND I.F. TRANS. SECONDARY
F	BROADCAST OSCILLATOR (SEE NOTE)
G	DETECTOR BROADCAST (ON GANG)
H	ANTENNA BROADCAST (ON GANG)
J	#22-519 BROADCAST PADDER
K	SHORT WAVE OSCILLATOR (SEE NOTE)
L	SHORT WAVE DETECTOR (SEE NOTE)
N	POLICE BAND OSCILLATOR (SEE NOTE)

NOTE:- TRIMMERS F, K, L, & N MOUNTED ON BAKELITE STRIP #22-549

DIAG NO.	PART NO.	DESCRIPTION
C21	22-601	10 MFD. CERAMIC
R16	63-583	1000 OHMS 1/2 W ± 20%

SPEAKERS		MODELS
49-203	8"	7-S-232
49-206	8"	7-S-240
49-206	8"	7-S-242
49-181	10"	7-S-258
49-195	12"	7-S-260
49-195	12"	7-S-261

I.F.-FREQUENCY 456 K.C.
7 TUBE SUPERHETERODYNE
3 BAND
CHASSIS Nº 5709

ZENITH RADIO CORP.

Models 7-J-232, 7-J-259 (5711 Chassis)

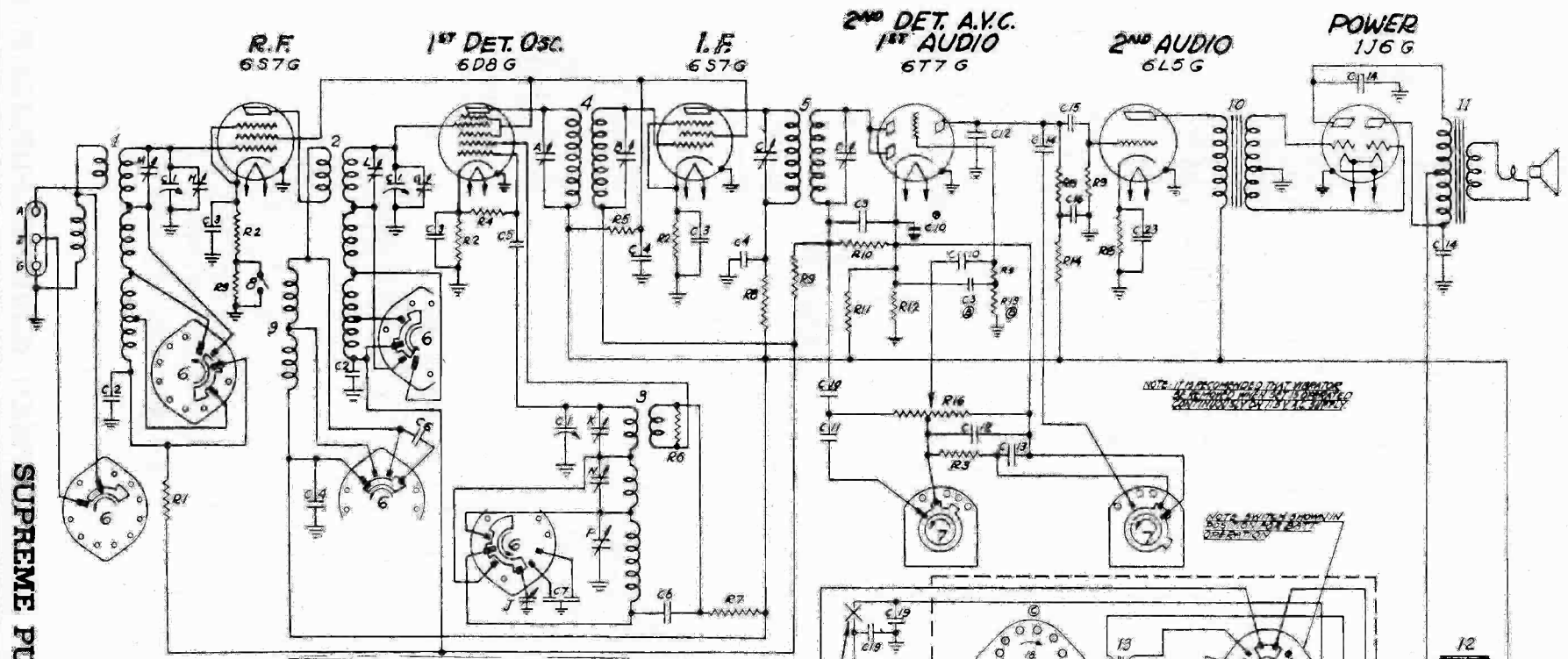

DIAG. NO.	PART NO.	DESCRIPTION
11		SPEAKER TRANS. (ON SPEAKER)
12	95-288	POWER CHOKE
13	95-425	POWER TRANSFORMER
14	S-2770	R.F. CHOKE ASSEMBLY
15	S-5043	R.F. CHOKE ASSEMBLY
16	20-82	R.F. CHOKE
17	190-12	VIBRATOR
18	85-125	POWER SWITCH

DIAG. NO.	PART NO.	DESCRIPTION	
C1	22 548	THREE GANG VARIABLE	
C2	22 487	.05 MFD.	400 V.
C3	22 250	.05 MFD.	200 V.
C4	22 212	.05 MFD.	400 V.
C5	22 289	50 MMFD.	600 V.
C6	22 127	25 MMFD.	600 V.
C7	22 558	DUAL FIXED PADDER	
C8	22 358	.002 MFD.	600 V.
C9	22 162	.0001 MFD.	600 V.
C10	22 327	.02 MFD.	200 V.
C11	22 182	.00025 MFD.	600 V.
C12	22 147	.0005 MFD.	600 V.
C13	22 229	.005 MFD.	600 V.
C14	22 492	.002 MFD.	600 V.
C15	22 188	.02 MFD.	400 V.
C16	22 170	.1 MFD.	400 V.
C17	22 350	.25 MFD.	200 V.
C18	22 199	.5 MFD.	200 V.
C19	22 435	.02 MFD.	600 V.
C20	22 574	.02 MFD.	600 V.
C21		8 MFD. ELECTROLYTIC	250
C22	22 577	8 MFD. "	250 V.
C23		10 MFD. "	25 V.
R1	63 595	100 M OHM	1/4 W ± 20
R2	63 692	560 OHM	1/2 W ± 10
R3	63 593	47 M OHM	1/4 W ± 20

DIAG. NO.	PART NO.	DESCRIPTION	
R4	63-678	47 M OHM	1/4 W ± 10
R5	63-678	47 M OHM	1/2 W ± 10
R6	63-589	10 M OHM	1/4 W ± 20
R7	63-796	10 M OHM	1/2 W ± 10
R8	63-605	1000 OHM	1/2 W ± 20
R9	63-271	1 MEGOHM	1/4 W ± 20
R10	63-658	390 M OHM	1/4 W ± 10
R11	63-160	100 M OHM	1/2 W ± 10
R12	63-634	820 OHM	1/4 W ± 10
R13	63-597	470 M OHM	1/4 W ± 20
R14	63-656	270 M OHM	1/4 W ± 10
R15	63 797	2200 OHM	1/2 W ± 10
R16	63 568	2 MEGOHM VOLUME CONTROL	
R17	63 577	100 OHM	1/4 W ± 20
R18	63 801	21 OHM (WIREWOUND)	1/2 W ± 5
R19	63 596	330 M OHM	1/4 W ± 20
1	S-5017	ANT. COIL & SHIELD ASSEM.	
2	S-5018	DET. COIL & SHIELD ASSEM.	
3	S-5163	OSC. COIL & SHIELD ASSEM.	
4	95-416	1ST. I.F. TRANSFORMER	
5	95-417	2ND I.F. TRANSFORMER	
6	85-103	BAND SELECTOR SWITCH	
7	85-108	TONE CONTROL SWITCH	
8	85-117	SENSITIVITY SWITCH	
9	20-135	R.F. CHOKE	
10	95-446	AUDIO TRANSFORMER	

I.F. FREQUENCY 456 K.C.
7 TUBE SUPERHETERODYNE
CHASSIS NO. 5711
6 VOLT D.C. — 115 VOLT A.C.

ZENITH RADIO CORPORATION

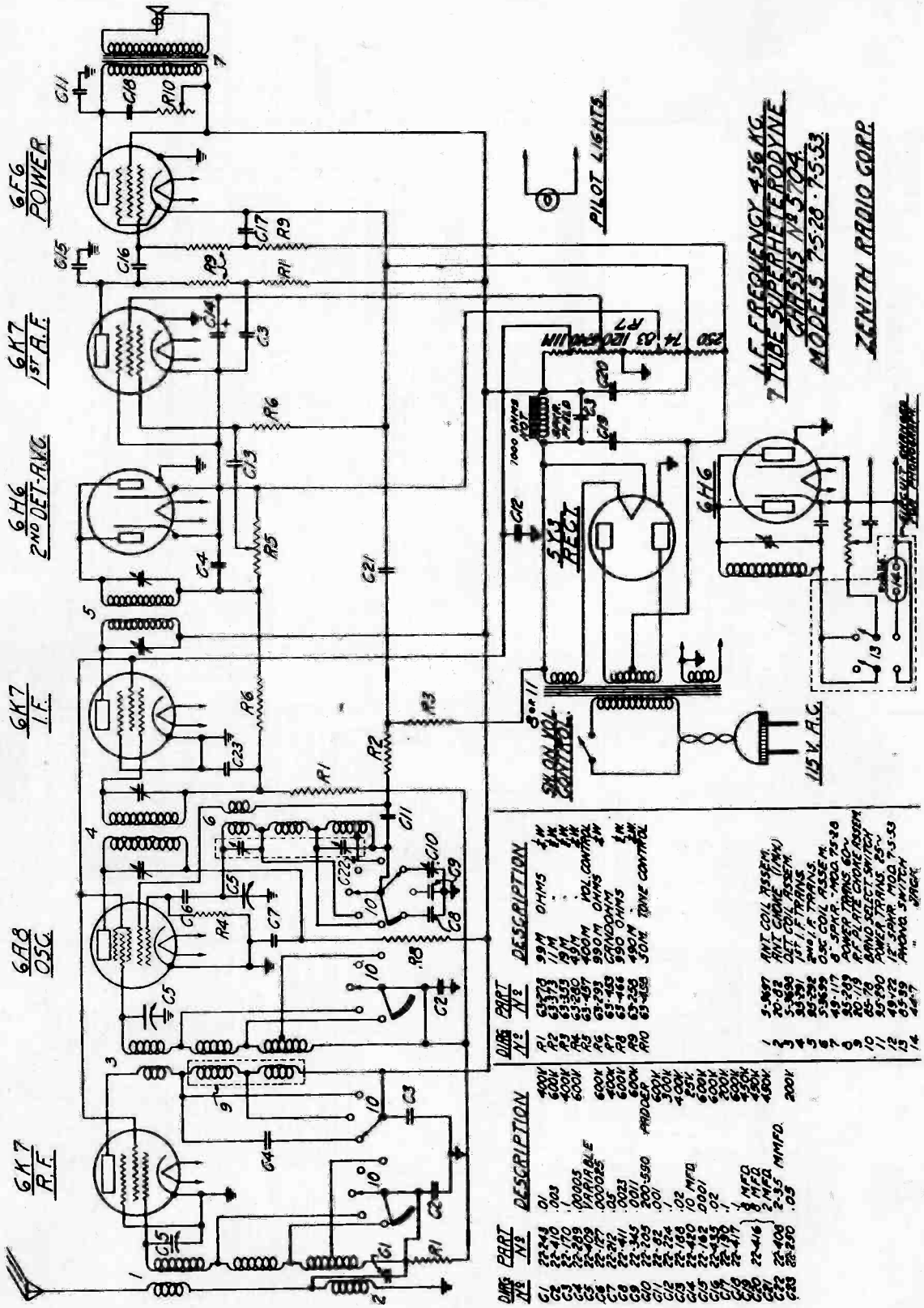
6F6 POWER
6K7 1ST A.F.
6H6 2ND DET-A.V.C.
6K7 I.F.
6A8 OSC.
6K7 R.F.
5X3 RECT.
6H6
PILOT LIGHTS
7 TUBE SUPERHETERODYNE
CHASSIS Nº 3704
MODELS 7-5-28 · 7-5-53
ZENITH RADIO CORP.
SW. ON VOL. CONTROL
115 V. A.C.
DWG Nº
PART Nº
DESCRIPTION
PART Nº
DESCRIPTION
DWG Nº
PART Nº
DESCRIPTION

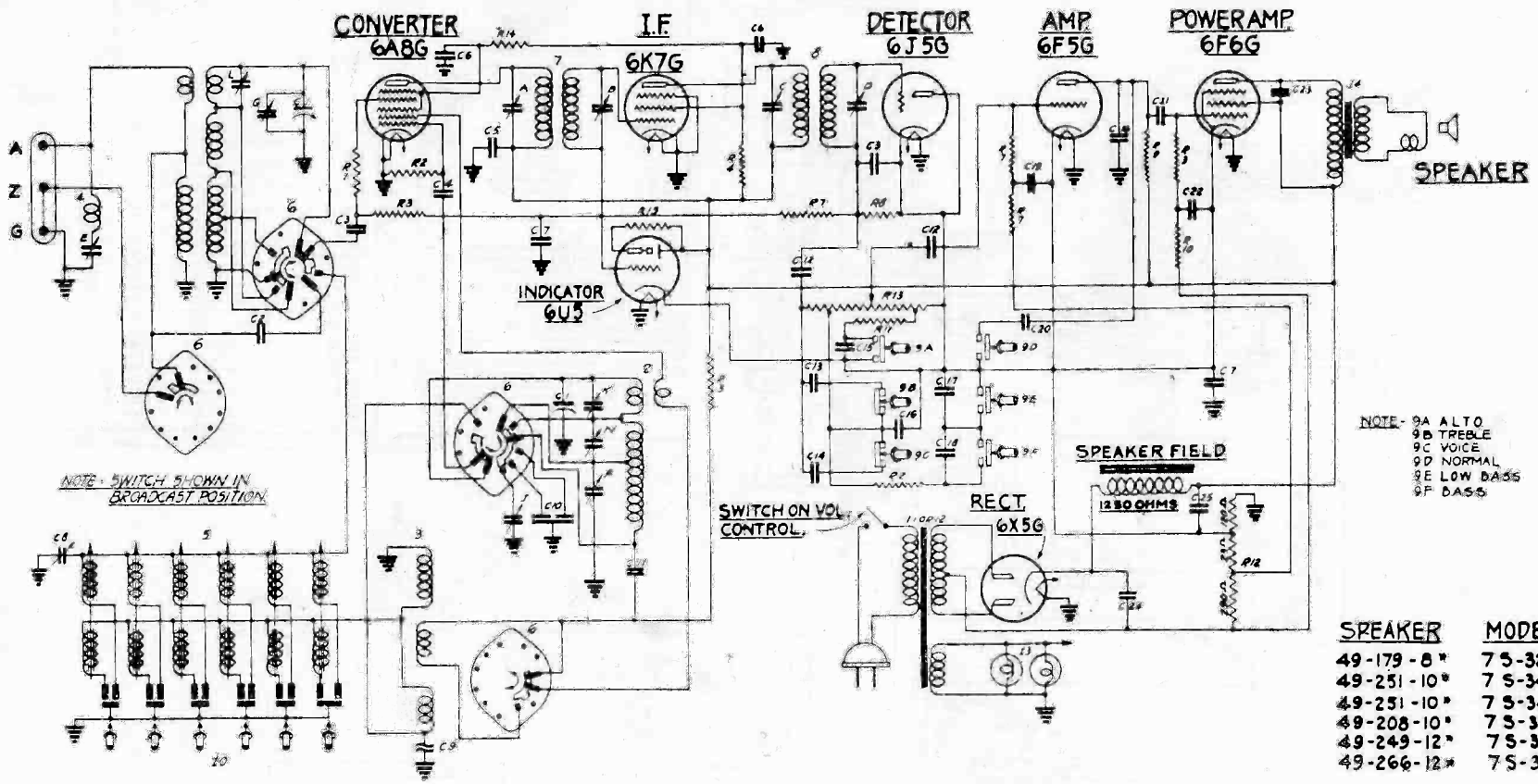

SPEAKER	MODEL
49-179-8*	7S-323
49-251-10*	7S-342
49-251-10*	7S-343
49-208-10*	7S-363
49-249-12*	7S-366
49-266-12*	7S-364

DIAG. NO.	PART NO.	DESCRIPTION	
C-1	22-717	TWIN BAND VAR. COND.	
C-2	22-289	.50 MFD.	600V
C-3	22-182	.0001 MFD.	600V
C-4	22-127	.25 MFD.	600V
C-5	22-170	.1 MFD.	600V
C-6	22-212	.05 MFD.	600V
C-7	22-250	.05 MFD.	600V
C-8	22-518	TRIMMER COND.	
C-9	22-760	COMPENSATING COND.	
C-10	22-798	DBL. FIXED PADDER	
C-11	22-358	.002 MFD.	600V
C-12	22-327	.02 MFD.	200V
C-13	22-182	.00025 MFD.	600V
C-14	22-670	.00015 MFD.	600V
C-15	22-185	.01 MFD.	200V
C-16	22-147	.0005 MFD.	600V
C-17	22-458	.006 MFD.	600V
C-18	22-326	.003 MFD.	600V
C-19	22-190	.1 MFD.	200V
C-20	22-444	.004 MFD.	600V
C-21	22-415	.02 MFD.	600V
C-22	22-219	.03 MFD.	200V
C-23	23-492	.002 MFD.	600V
C-24	22-718	12 MFD. ELECTROLYTIC	450V
C-25	22-719	16 MFD. ELECTROLYTIC	350V
P-1	63-621	39 OHM	1/4 W
P-2	63-592	33 M OHM	1/4 W
P-3	63-597	470 M OHM	1/4 W
P-4	63-981	47 M OHM	1/2 W
P-5	63-680	10 M OHM	1 W
P-7	63-271	1 MEGOHM	1/4 W
P-8	63-655	220 M OHM	1/4 W
P-9	61-296	220 M OHM	1/4 W
P-10	63-585	100 M OHM	1/4 W
P-11	63-591	22 M OHM	1/4 W
P-12	63-986	3 SECTION CANDOHM	

DIAG. NO.	PART NO.	DESCRIPTION	
P-13	63-935	VOLUME CONTROL	
P-14	63-663	15 M OHM	1/4 W
P-15		1 MEGOHM MOUNTED ON TUBE BASE	
1			
2	S-6286	ANTENNA COIL & SHIELD ASSEM.	
3	20-196	COMPENSATING COIL	
4	20-164	WAVE TRAP	
5			
6	89-151	BAND SELECTOR SWITCH	
7	95-536	1ST I.F. TRANS. PRIMARY	
8	95-537	2ND I.F. TRANS. PRIMARY	
9	S-6224	TONE CONTROL 9W ASSEM.	
10	85-152	AUTOMATIC TUNING SWITCH	
11	95-526	PRIMARY TRANS. 1ST - 50-60 ~	
12	95-515	PRIMARY TRANS. ALL OTHER 25 ~	
13	100-18	PILOT LIGHT, 25A - 6.3V	
14		SPEAKER TRANS.	

DIAG. NO.	PART NO.	DESCRIPTION
A		1ST I.F. TRANS. PRI.
B		1ST I.F. TRANS. SEC.
C		2ND I.F. TRANS. PRI.
D		2ND I.F. TRANS. SEC.
E		WAVE TRAP
F		BROADCAST OSC. (SEE NOTE)
G		ANTENNA BROADCAST (ON GANG)
J	22-463	BROADCAST PADDER
K		SHORT WAVE OSC. (SEE NOTE)
L	22-305	SHORT WAVE DETECTOR
M		POLICE BAND OSC. (SEE NOTE)

NOTE - TRIMMERS 'F-K & M' MOUNTED ON BAKELITE STRIP - PART NO. 22-326

Chassis No. 5714

I.F. FREQUENCY 455 K.C.
7 TUBE SUPERHETERODYNE
CHASSIS No 5714-A.C. 3-BAND
ZENITH RADIO CORPORATION

Models 8-S-129, 8-S-154. (Chassis No. 5801)

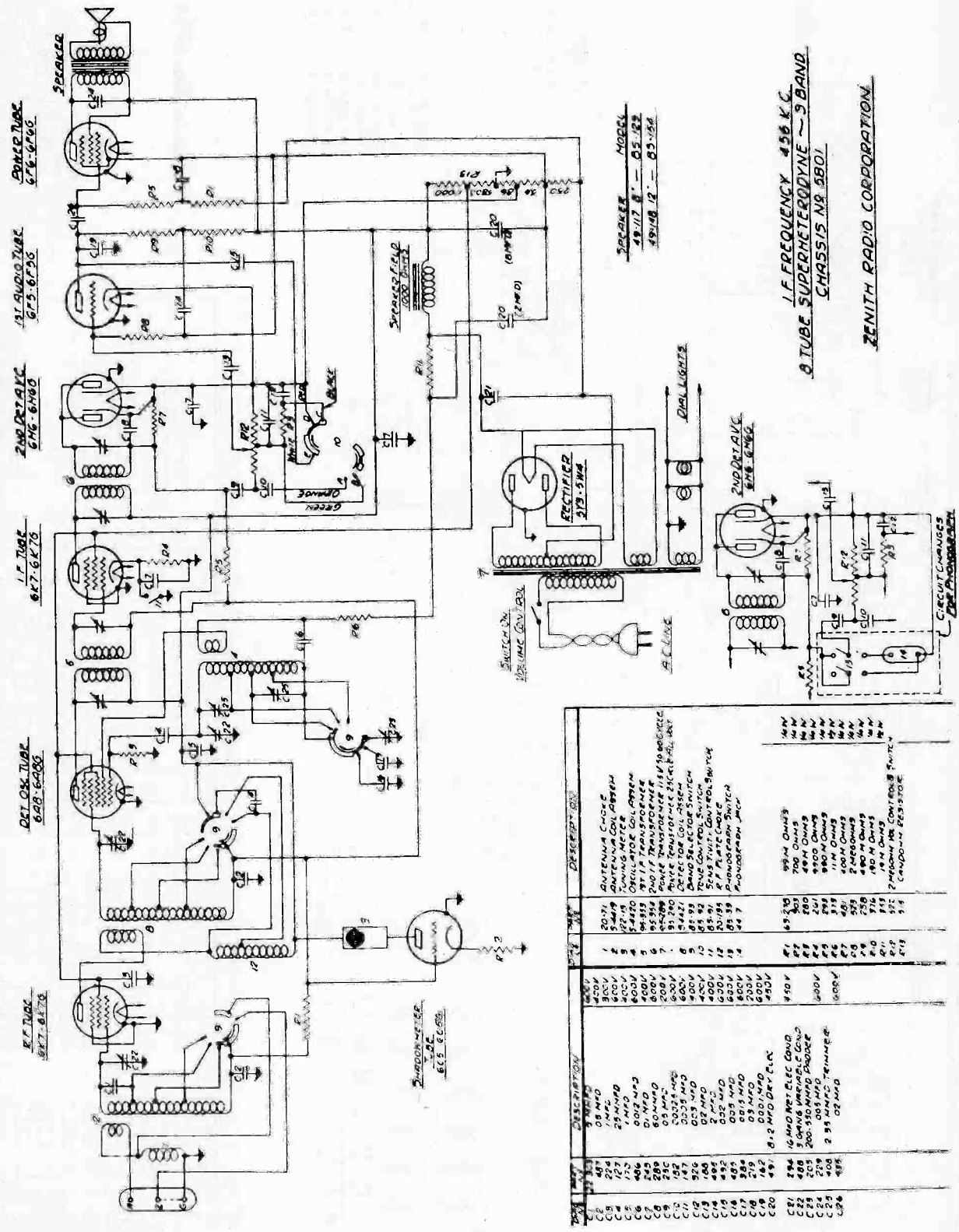

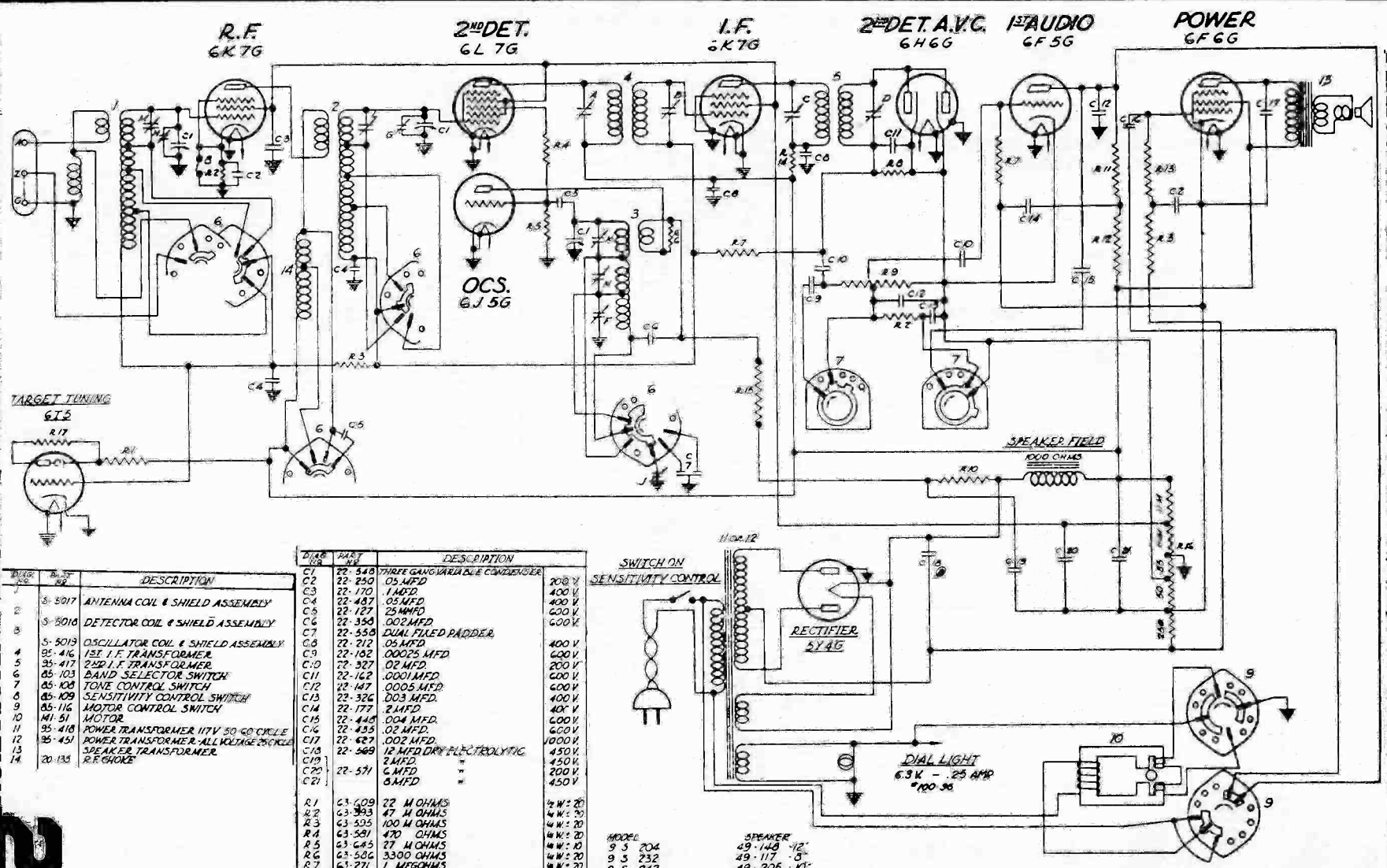

DIAG. NO.	PART NO.	DESCRIPTION
1		
2	5-5017	ANTENNA COIL & SHIELD ASSEMBLY
3	5-5018	DETECTOR COIL & SHIELD ASSEMBLY
4	5-5019	OSCILLATOR COIL & SHIELD ASSEMBLY
5	95-416	1ST I.F. TRANSFORMER
6	95-417	2ND I.F. TRANSFORMER
7	85-103	BAND SELECTOR SWITCH
8	85-108	TONE CONTROL SWITCH
9	85-109	SENSITIVITY CONTROL SWITCH
10	85-116	MOTOR CONTROL SWITCH
11	141-51	MOTOR
12	95-418	POWER TRANSFORMER 117V 50-60 CYCLE
13	95-451	POWER TRANSFORMER-ALL VOLTAGE 25 CYCLE
14	20-138	SPEAKER TRANSFORMER
		R.F. CHOKE

DIAG. NO.	PART NO.	DESCRIPTION	
C1	22-548	THREE GANG VARIABLE CONDENSER	
C2	22-250	.05 MFD	200 V.
C3	22-170	.1 MFD.	400 V.
C4	22-487	.05 MFD	400 V.
C5	22-127	25 MMFD	600 V.
C6	22-356	.002 MFD	600 V.
C7	22-558	DUAL FIXED PADDER	
C8	22-212	.05 MFD	400 V.
C9	22-162	.00025 MFD	600 V.
C10	22-327	.02 MFD.	200 V.
C11	22-162	.0001 MFD	600 V.
C12	22-147	.0005 MFD	600 V.
C13	22-326	.003 MFD.	400 V.
C14	22-177	.2 MFD	400 V.
C15	22-445	.004 MFD.	600 V.
C16	22-435	.02 MFD.	600 V.
C17	22-627	.002 MFD.	1000 V.
C18	22-569	12 MFD DRY ELECTROLYTIC	450 V.
C19	22-571	2 MFD. "	450 V.
C20		6 MFD "	200 V.
C21		8 MFD "	450 V.
R1	63-609	22 M OHMS	½ W. ± 20
R2	63-593	47 M OHMS	½ W. ± 20
R3	63-595	100 M OHMS	½ W. ± 20
R4	63-581	470 OHMS	½ W. ± 20
R5	63-645	27 M OHMS	½ W. ± 10
R6	63-586	3300 OHMS	½ W. ± 20
R7	63-271	1 MEGOHMS	½ W. ± 20
R8	63-658	390 M OHMS	½ W. ± 10
R9	63-620	2 MEGOHM VOLUME CONTROL	
R10	63-508	15 M OHMS	1 W. ± 20
R11	63-296	220 M OHMS	½ W. ± 20
R12	63-654	180 M OHMS	½ W. ± 10
R13	63-597	470 M OHMS	½ W. ± 20
R14	63-605	1000 OHMS	½ W. ± 20
R15	63-680	10 M OHMS	1 W. ± 20
R16	63-570	5 SECTION CANDOHM	
R17		1 MEGOHM MOUNTED IN TUNING TUBE SOCKET	

MODEL	SPEAKER
9 S 204	49-148 -12"
9 S 232	49-117 -8"
9 S 242	49-205 -10"
9 S 244	49-205 -10"
9 S 262	49-148 -12"
9 S 263	49-148 -12"
9 S 264	49-148 -12"

I.F.-FREQUENCY 456 K.C.
9 TUBE SUPERHETERODYNE
3 BAND
CHASSIS No. 5905

Models 9-S-203, 9-S-232, 9-S-242, 9-S-244, 9-S-262, 9-S-263, 9-S-264 (5905 Chassis)

MANUAL OF MOST-OFTEN-NEEDED RADIO DIAGRAMS

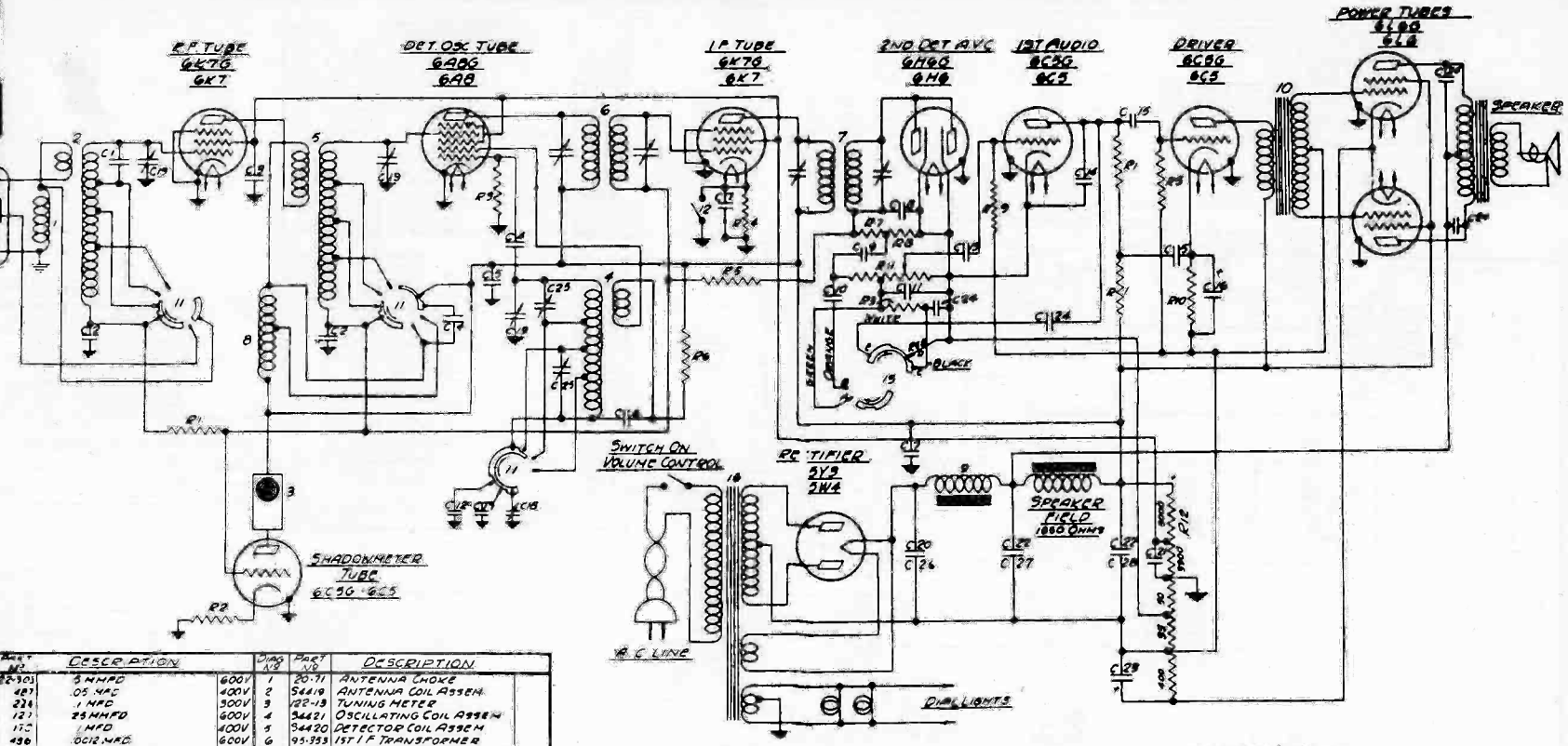

Diag. No.	Part No.	Description		Diag. No.	Part No.	Description
C1	22-303	.5 MMFD	600V	1	20-71	Antenna Choke
C2	487	.05 MFD	400V	2	54419	Antenna Coil Assem.
C3	224	.1 MFD	300V	3	122-13	Tuning Meter
C4	121	25 MMFD	600V	4	54421	Oscillating Coil Assem
C5	170	1 MFD	400V	5	54420	Detector Coil Assem
C6	496	.0012 MFD	600V	6	95-353	1st I.F. Transformer
C7	243	.01 MFD	400V	7	95-354	2nd I.F. Transformer
C8	289	80 MMFD	600V	8	20-155	R.F. Plate Choke
C9	250	.05 MFD	200V	9	95-356	Power Choke
C10	182	.00025 MFD	600V	10	95-360	Audio Transformer
C11	147	.0005 MFD	600V	11	85-93	Band Selector Switch
C12	485	.005 MFD	600V	12	85-91	Sensitivity Cont. Switch
C13	166	.02 MFD	400V	13	85-92	Tone Control Switch
C14	168	.0001 MFD	600V	14	85-39	Phonograph Switch
C15	435	.02 MFD	600V	15	44-7	Phonograph Jack
C16	507	10 MFD Dry Elec Cond	25V	16	95-355	Power Trans 115V 50-60 Cycle
C17	364	.0015 MFD	600V		95-363	Power Trans 25 Cycle - All Voltage
C18	205	200-550 MMFD Osc Padder				
C19	488	3 Gang Variable Cond				
C20	504	8 MFD Wet Elec. Cond. 60 Cycle	450V			
C21	508	16 MFD Wet Elec Cond	250V			
C22	493	8 & 8 MFD Dry Elec Cond 60 Cy	450V			
C23	405	10 MFD Dry Elec Cond	50V			
C24	229	.005 MFD	600V			
C25	408	2-95 MMFD Trimmer				
R1	69-878	98M Ohms	¼W			NOTE —
R2	909	700 Ohms	¼W			*22-510 8 & 8 MFD Dry
R3	280	49M Ohms	¼W			Electrolytic Replaces
R4	261	9900 Ohms	¼W			*22-508, *22-512
R5	293	990M Ohms	¼W			8 MFD Dry Electrolytic
R6	378	11M Ohms	½W			Replaces *22-504 8 MFD Wet
R7	260	100M Ohms	¼W			Electrolytic in Model
R8	385	900M Ohms	¼W			*10S-147 End Table.
R9	529	2 Megohms	¼W			
R10	300	990 Ohms	½W			
R11	522	2 Megohm Volume Cont & Sw				
R12	516	Candohm Resistor				
				C26	22-294	16 MFD Wet Elec Cond 25 Cycle 450V
				C27	22-302	16 MFD Dry Elec Cond 25 Cycle 450V
				C28		8 MFD Dry Elec Cond 25 Cycle 450V

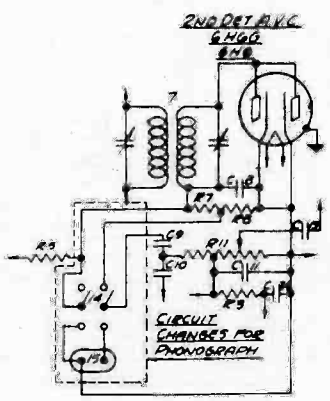

(Chassis No. 1004)

Speaker		Model
49-146	8"	10S-130
49-147	12"	10S-155
		10S-156
		10S-160
49-156	12"	10S-147
		10S-153
		10S-157

I.F. FREQUENCY 456 KC
10 TUBE SUPERHETERODYNE — 3 BAND
CHASSIS No 1004

ZENITH RADIO CORPORATION

Models 10-S-30, 10-S-155, 10-S-156, 10-S-160, 10-S-147, 10-S-153, 10-S-157.

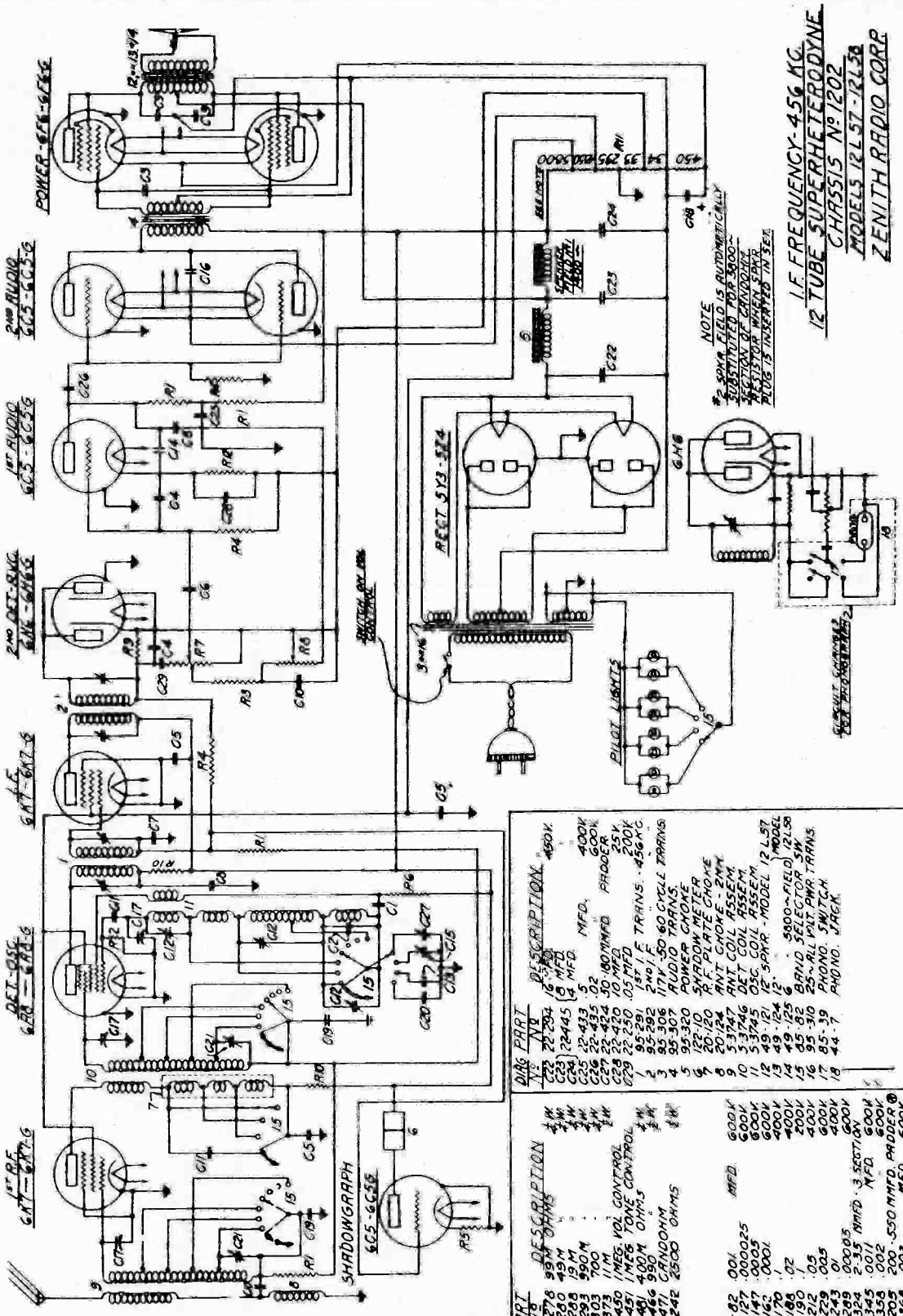
I.F. FREQUENCY-456 KC.
12 TUBE SUPERHETERODYNE
CHASSIS No 1202
MODELS 12L57-12L58
ZENITH RADIO CORP
NOTE
#2 SPKR. FIELD IS AUTOMATICALLY SUBSTITUTED FOR 3600~ SECTION OF CANDOHM RESISTOR WHEN SPKR. PLUG IS INSERTED IN SEX.
POWER-6F6-6F6G
2ND AUDIO 6C5-6C5G
1ST AUDIO 6C5-6C5G
2ND DET-B.V.C. 6K6-6H6G
I.F. 6K7-6K7G
DET-OSC. 6B8-6A8G
1ST R.F. 6K7-6K7G
RECT. 5Y3-5Z4
PILOT LIGHTS
SHADOWGRAPH
6C5-6C5G
6K6
SHADOWGRAPH BRIDGE CIRCUIT
DIAG. PART No. DESCRIPTION
1 95-291 1ST I.F. TRANS. - 456 KC.
2 95-292 2ND I.F.
3 95-306 117V. 50-60 CYCLE TRANS.
4 95-307 AUDIO TRANS.
5 95-320 POWER CHOKE
6 122-110 SHADOW METER
7 20-120 R.F. PLATE CHOKE
8 20-124 ANT. CHOKE - 2MH.
9 5-3747 ANT. COIL ASSEM.
10 5-3746 DET. COIL ASSEM.
11 5-3745 OSC. COIL ASSEM.
12 49-121 12" SPKR. - MODEL 12L57
13 49-124 12" " 3600~ FIELD MODEL 12L58
14 49-125 6" "
15 85-82 BAND SELECTOR SW.
16 95-310 25~ ALL VAL. PWR. TRANS.
17 85-39 PHONO. SWITCH
18 44-7 PHONO. JACK
DIAG. PART No. DESCRIPTION
R1 63-278 99M OHMS
R2 63-268 49M
R3 63-269 19M
R4 63-293 990M
R5 63-303 700
R6 63-373 11M
R7 63-450 1 MEG. VOL. CONTROL
R8 63-451 1 MEG. TONE CONTROL
R9 63-466 400M OHMS
R10 63-471 990
R11 63-242 CANDOHM 2500 OHMS
C1 22-82 .001 MFD. 600V.
C2 22-127 .000025 600V.
C3 22-147 .0005 600V.
C4 22-162 .0001 600V.
C5 22-170 400V.
C6 22-190 .1 200V.
C7 22-212 .02 400V.
C8 22-229 .05 600V.
C9 22-243 .05 400V.
C10 22-243 .01 600V.
C11 22-269 .00005 600V.
C12 22-324 2.35 MMFD. - 3 SECTION
C13 22-345 .0011 MFD. 600V.
C14 22-358 .002 600V.
C15 22-205 200 - 550 MMFD. PADDER ®
C16 22-366 .003 MFD. 600V.
C17 22-409 3 GANG VARIABLE
C18 22-405 18 MFD. 50V.
C19 22-410 .003 MFD. 600V.
C20 22-411 .0023
C21 22-418 2.35 MMFD.
C22 22-445 18 MFD. 450V.
C23 22-294 16 MFD. 400V.
C24 22-445 8 MFD. 600V.
C25 22-433 4 MFD. 25V.
C26 22-435 .5 PADDER 200V.
C27 22-424 .02 .05 MFD. 200V.
C28 22-420 .10 MMFD.
C29 22-250 .05 MFD.

Models 12-S-205, 12-S-232, 12-S-245, 12-S-265, 12-S-266, 12-S-267, 12-S-268 (1204 Chassis)

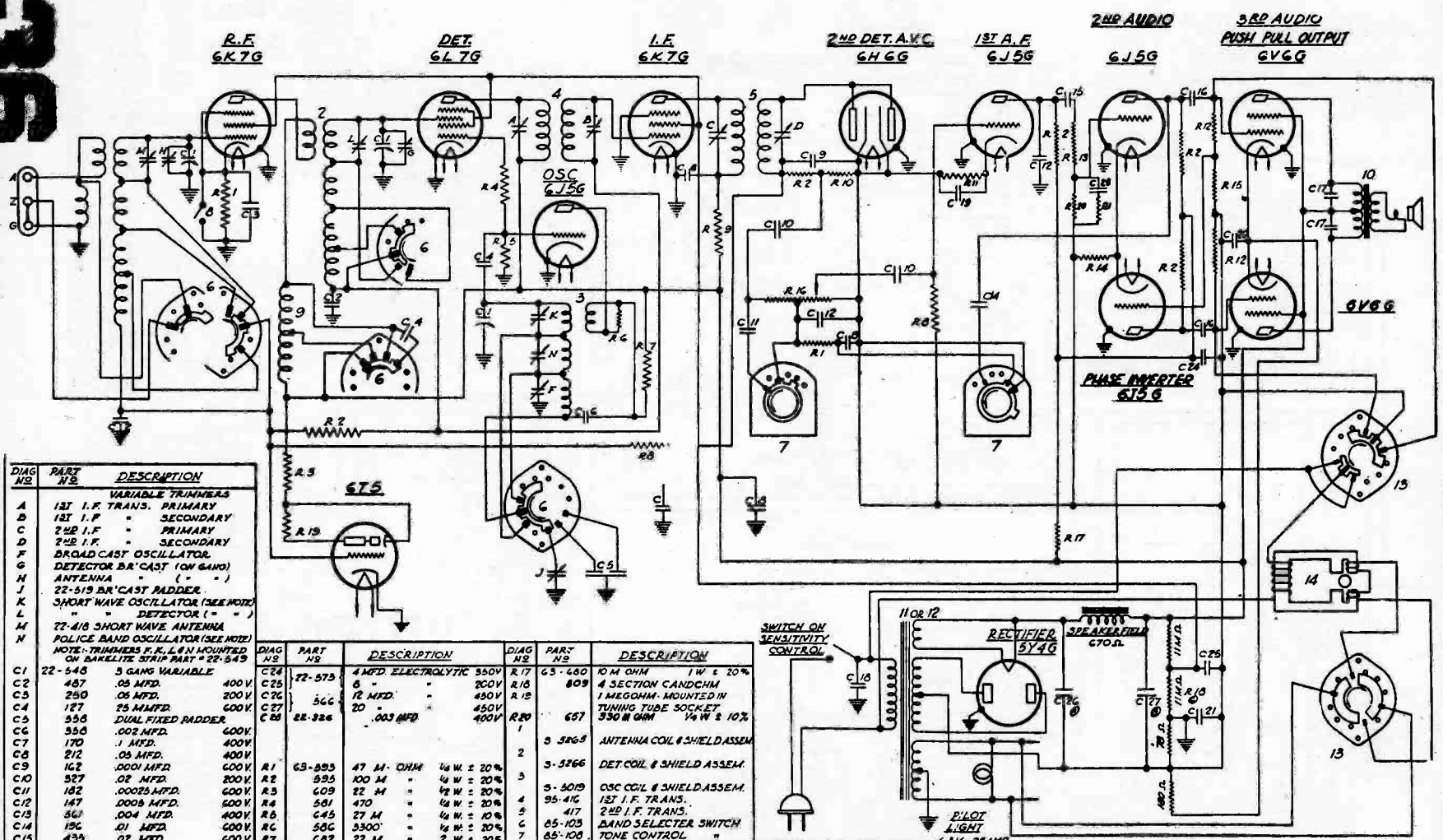

DIAG Nº	PART Nº	DESCRIPTION	
		VARIABLE TRIMMERS	
A		1ST I.F. TRANS. PRIMARY	
B		1ST I.F. " SECONDARY	
C		2ND I.F. " PRIMARY	
D		2ND I.F. " SECONDARY	
F		BROAD CAST OSCILLATOR	
G		DETECTOR B.R'CAST (ON GANG)	
H		ANTENNA " (" ")	
J		22-519 BR'CAST PADDER	
K		SHORT WAVE OSCILLATOR (SEE NOTE)	
L		" " DETECTOR (" ")	
M		22-418 SHORT WAVE ANTENNA	
N		POLICE BAND OSCILLATOR (SEE NOTE)	
		NOTE:-TRIMMERS F, K, L & N MOUNTED ON BAKELITE STRIP PART # 22-549	
C1	22-546	3 GANG VARIABLE	
C2	487	.05 MFD.	400 V.
C3	250	.05 MFD.	200 V.
C4	127	25 MMFD.	600 V.
C5	556	DUAL FIXED PADDER	
C6	556	.002 MFD.	600 V.
C7	170	.1 MFD.	400 V.
C8	212	.05 MFD.	400 V.
C9	162	.0001 MFD.	600 V.
C10	527	.02 MFD.	200 V.
C11	182	.00025 MFD.	600 V.
C12	147	.0005 MFD.	600 V.
C13	561	.004 MFD.	400 V.
C14	196	.01 MFD.	600 V.
C15	439	.02 MFD.	600 V.
C16	171	.05 MFD.	600 V.
C17	229	.005 MFD.	600 V.
C18	525	.005 MFD.	1000 V.
C19	572	10 MFD. ELECTROLYTIC	25 V.
C20	572	10 " "	25 V.
C21	572	10 " "	25 V.

DIAG Nº	PART Nº	DESCRIPTION	
C24	22-573	4 MFD. ELECTROLYTIC	350 V.
C25	572	8 " "	200 V.
C26	572	12 MFD. "	450 V.
C27	572	20 " "	450 V.
C28	22-326	.003 MFD.	400 V.
R1	63-893	47 M. OHM	1/4 W. ± 20%
R2	595	100 M "	1/4 W. ± 20%
R3	609	22 M "	1/2 W. ± 20%
R4	561	470 "	1/4 W. ± 20%
R5	645	27 M "	1/4 W. ± 10%
R6	586	5300 "	1/4 W. ± 20%
R7	682	22 M "	2 W. ± 20%
R8	271	1 MEGOHM	1/4 W. ± 20%
R9	605	1000 OHM	1/2 W. ± 20%
R10	596	530 M "	1/4 W. ± 20%
R11	282	2200 "	1/4 W. ± 10%
R12	260	100 M "	1/4 W. ± 10%
R13	653	150 M "	1/4 W. ± 10%
R14	439	2700 "	1/4 W. ± 10%
R15	639	6800 "	1/4 W. ± 10%
R16	568	2 MEGOHM VOLUME CONTROL	

DIAG Nº	PART Nº	DESCRIPTION
R17	63-680	10 M OHM 1 W ± 20%
R18	809	4 SECTION CANDOHM
R19		1 MEGOHM - MOUNTED IN TUNING TUBE SOCKET
R20	657	330 M OHM 1/4 W ± 10%
1	5-5265	ANTENNA COIL & SHIELD ASSEM.
2	5-5266	DET. COIL & SHIELD ASSEM.
3	5-5019	OSC COIL & SHIELD ASSEM.
4	95-416	1ST I.F. TRANS.
5	417	2ND I.F. TRANS.
6	85-103	BAND SELECTER SWITCH
7	85-108	TONE CONTROL "
8	85-109	SENSITIVITY "
9	20-135	R.F. CHOKE
10		SPEAKER TRANS.
11	95-421	POWER TRANS 117V-50-60CYCLE
12	95-455	" " ALL VOLTAGE 25 CYCLE
13	85-120	MOTOR CONTROL SWITCH
14	141-51	MOTOR

MODEL	SP'KR PART Nº	SIZE
12S-205	49-185	12
12S-232	49-185	8
12S-245	49-184	12
12S-265	49-185	12
12S-266	49-185	12
12S-267	49-185	12
12S-268	49-185	12

I.F. FREQUENCY 456 K.C.
12 TUBE SUPERHETERODYNE
3 BAND
CHASSIS NO. 1204
ZENITH RADIO CORP.

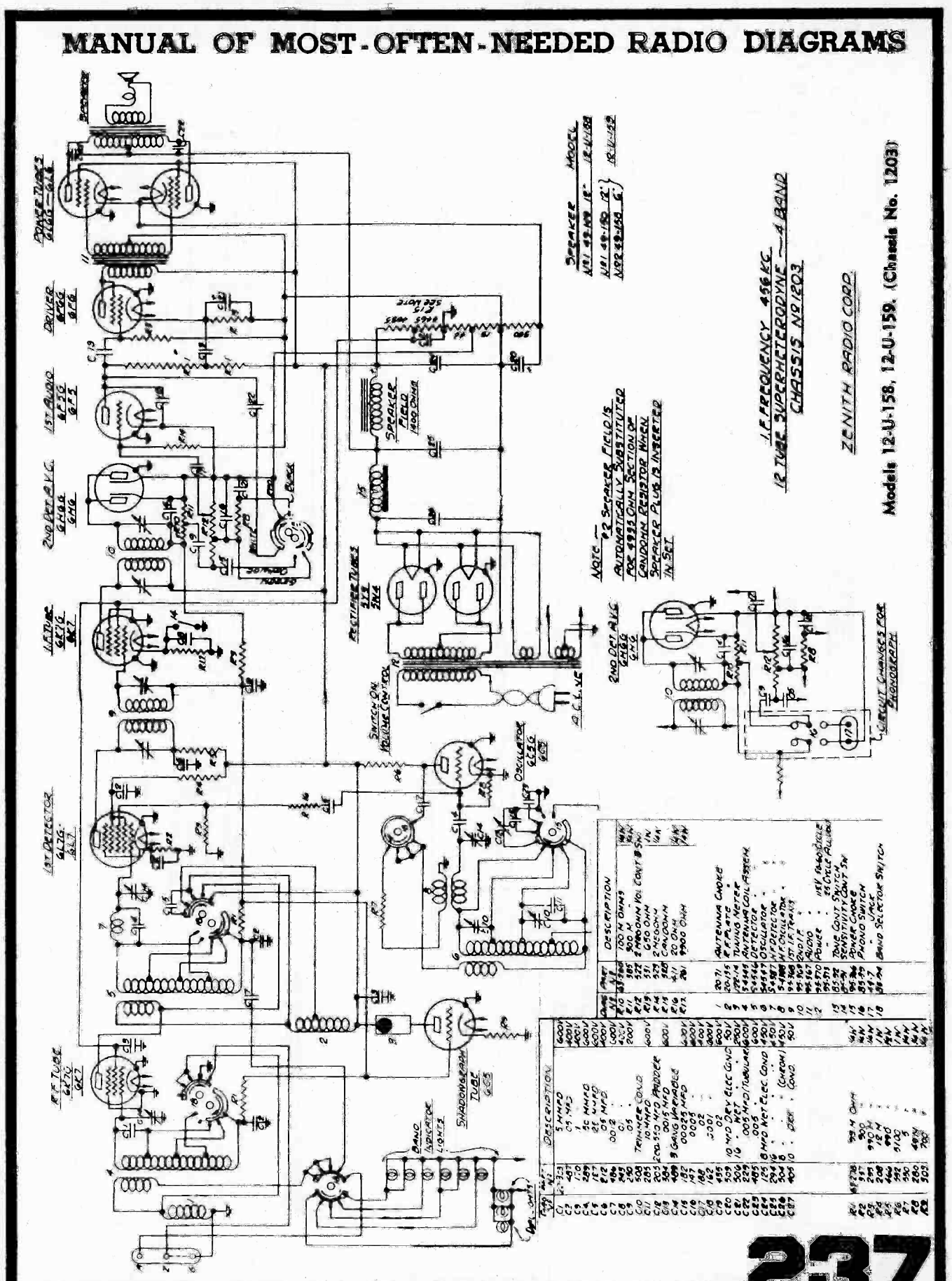
I.F. FREQUENCY 456 KC
12 TUBE SUPERHETERODYNE — 4 BAND
CHASSIS No 1203
ZENITH RADIO CORP
Models 12-U-158, 12-U-159. (Chassis No. 1203)
NOTE — 12 SPEAKER FIELD IS AUTOMATICALLY SUBSTITUTED FOR 4933 OHM SECTION OF 2000 OHM RESISTOR WHEN SPEAKER PLUG IS INSERTED IN SET
SPEAKER MODEL
SPEAKER FIELD 1400 OHMS
RECTIFIER TUBES 5Y3 2X4
SHADOWGRAPH TUBE 6G5
BAND INDICATOR 10 MFD
SWITCH ON VOLUME CONTROL
CIRCUIT CHANGES FOR PHONOGRAPH
DESCRIPTION
ANTENNA CHOKE
R.F. PLATE
TUNING METER
ANTENNA COIL ASSEM.
OSCILLATOR
H.F. DETECTOR
H.F. CHOLLTOK
1ST I.F. TRANS.
2ND I.F.
AUDIO
POWER
TONE CONT SWITCH
SENSITIVITY CONT SW
POWER CHOKE
PHONO SWITCH
BAND SELECTOR SWITCH

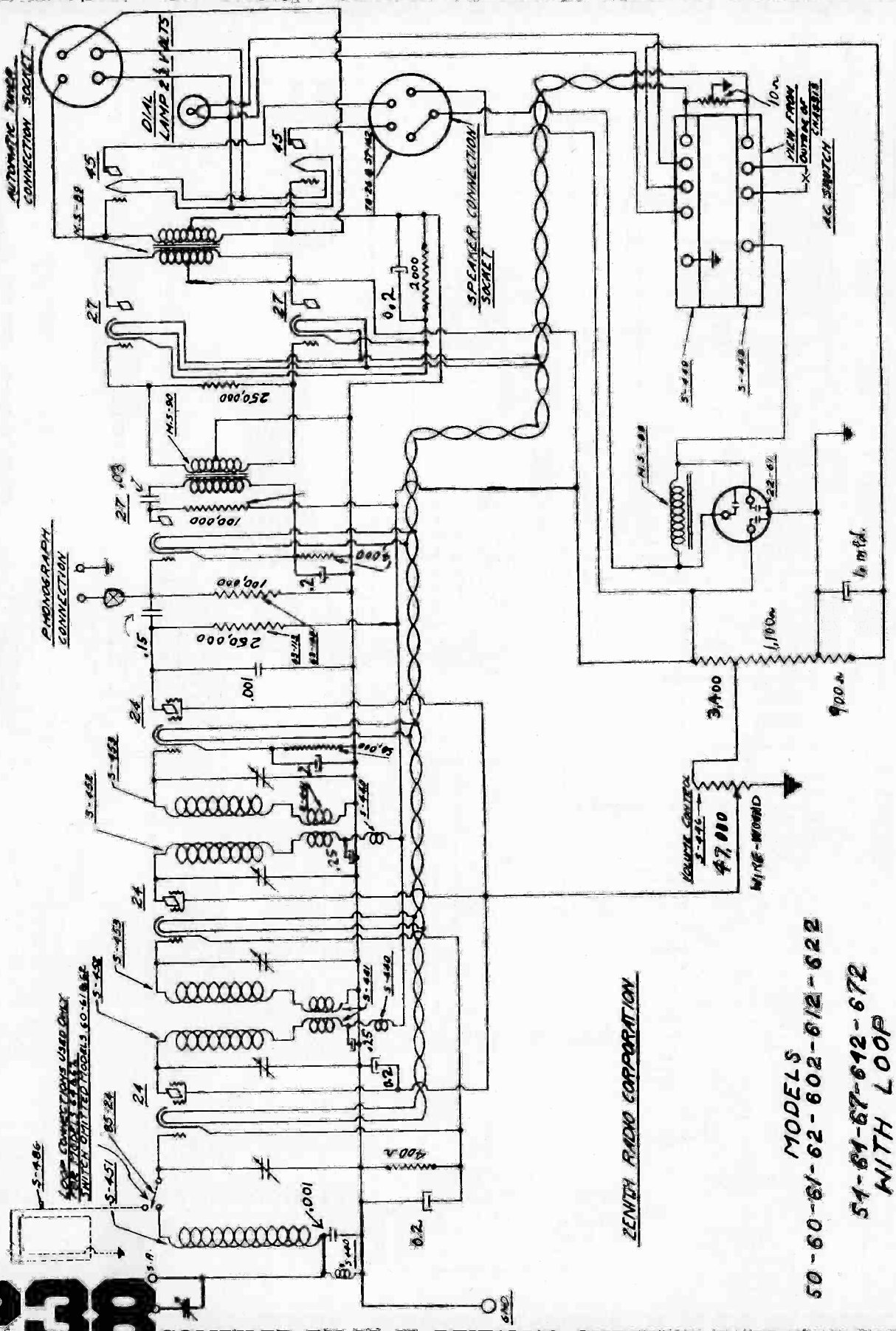
AUTOMATIC TUNER CONNECTION SOCKET
DIAL LAMP 2½ VOLTS
SPEAKER CONNECTION SOCKET
PHONOGRAPH CONNECTION
A.C. SWITCH
VIEW FROM OUTSIDE OF CHASSIS
VOLUME CONTROL
47,000
WIRE-WOUND
LOOP CONNECTIONS USED ONLY FOR MODELS 64 & 65 SWITCH OMITTED MODELS 60-61 & 62
ZENITH RADIO CORPORATION
MODELS
50-60-61-62-602-612-622
51-61-67-612-672
WITH LOOP

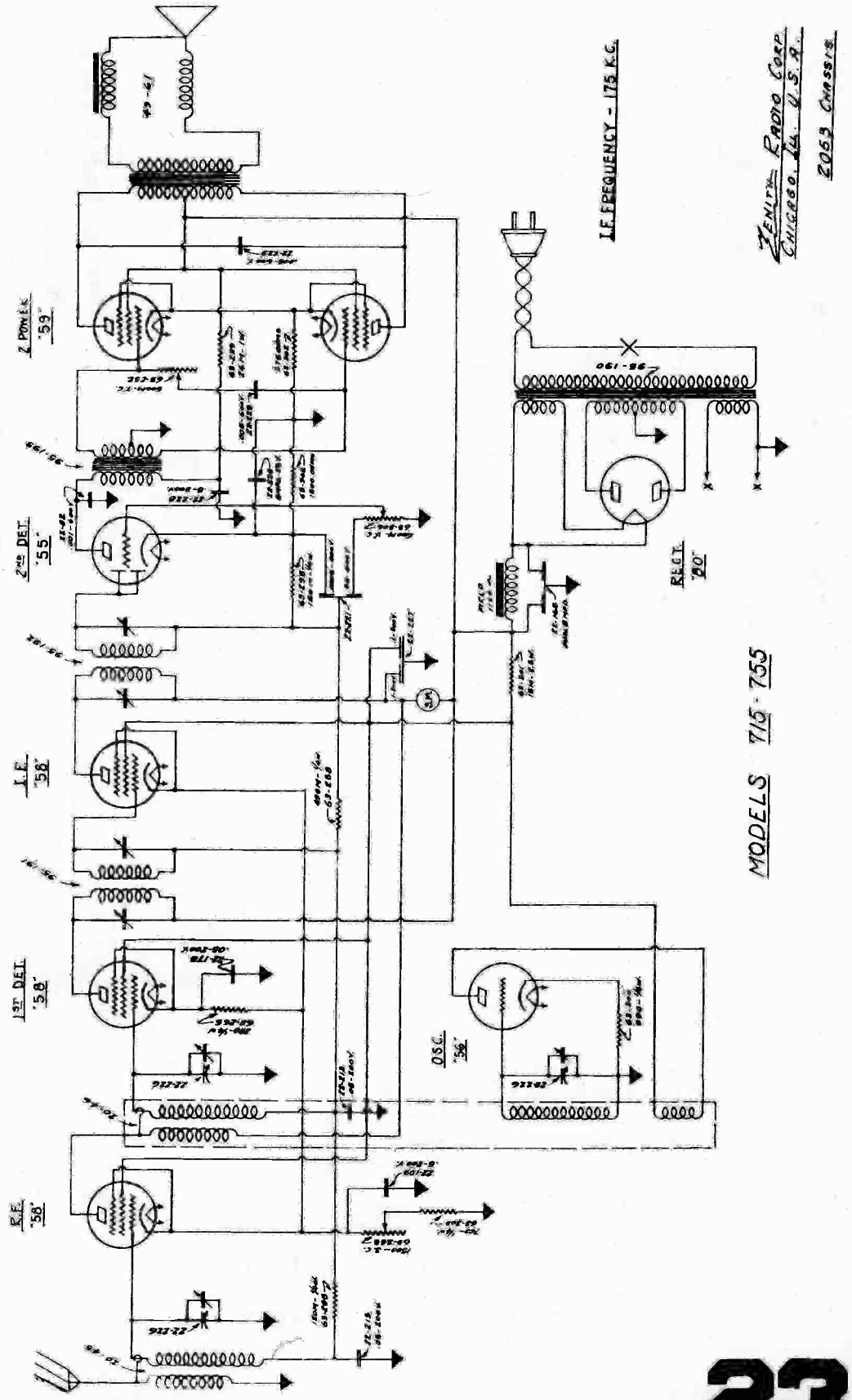
I.F. FREQUENCY - 175 K.C.
ZENITH RADIO CORP.
CHICAGO, ILL. U.S.A.
2053 CHASSIS
MODELS 715 · 755
2ND POWER '59'
2ND DET. '55'
I.F. '58'
1ST DET. '58'
R.F. '58'
OSC. '56'
RECT. '80'

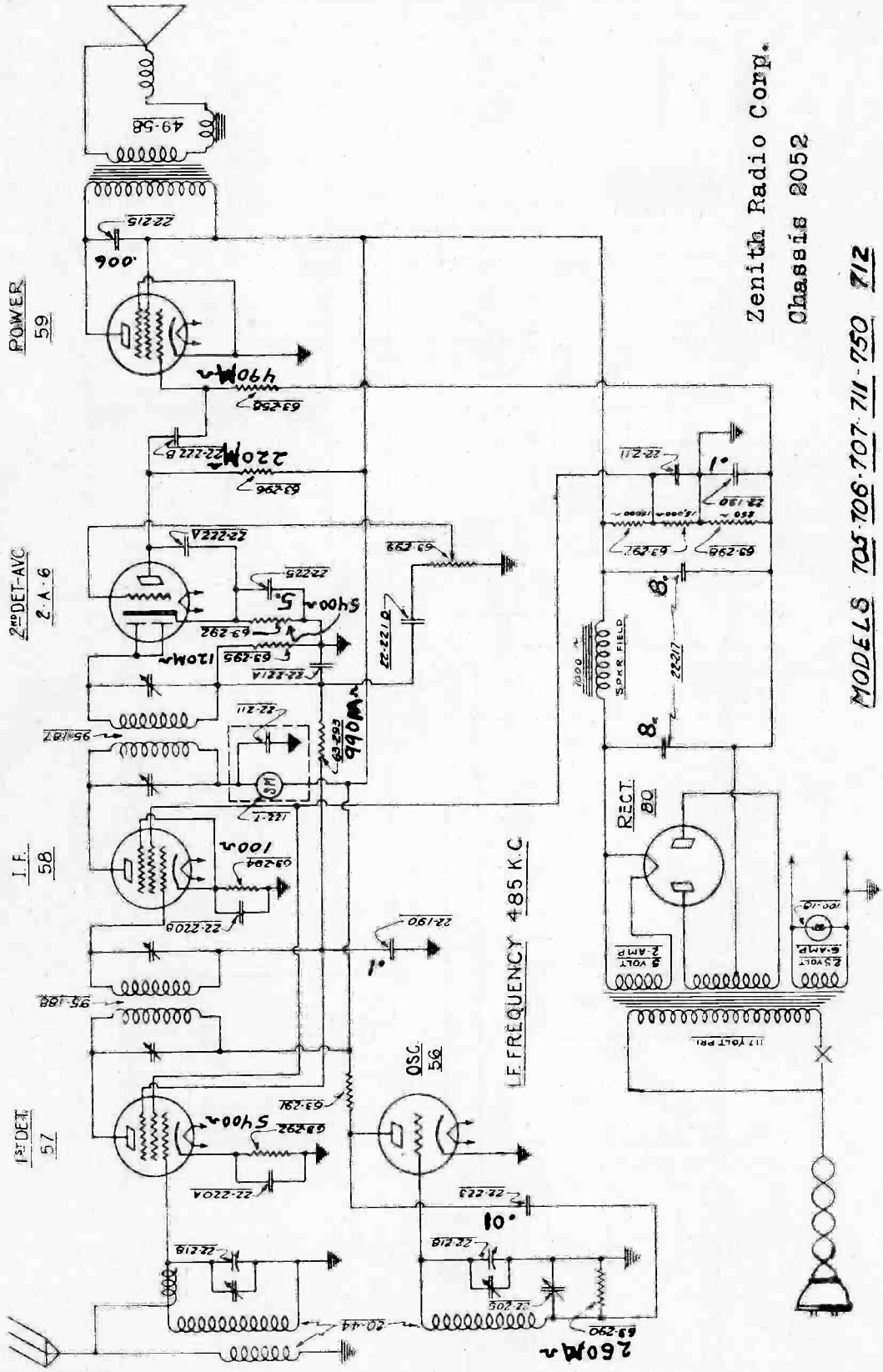

COMPILED BY M. N. BEITMAN, SUPREME PUBLICATIONS

KRAMER'S RADIO SERVICE
36 COLUMBUS AVE.
NEW YORK 23, N. Y.
PHONE: Circle 6-5055

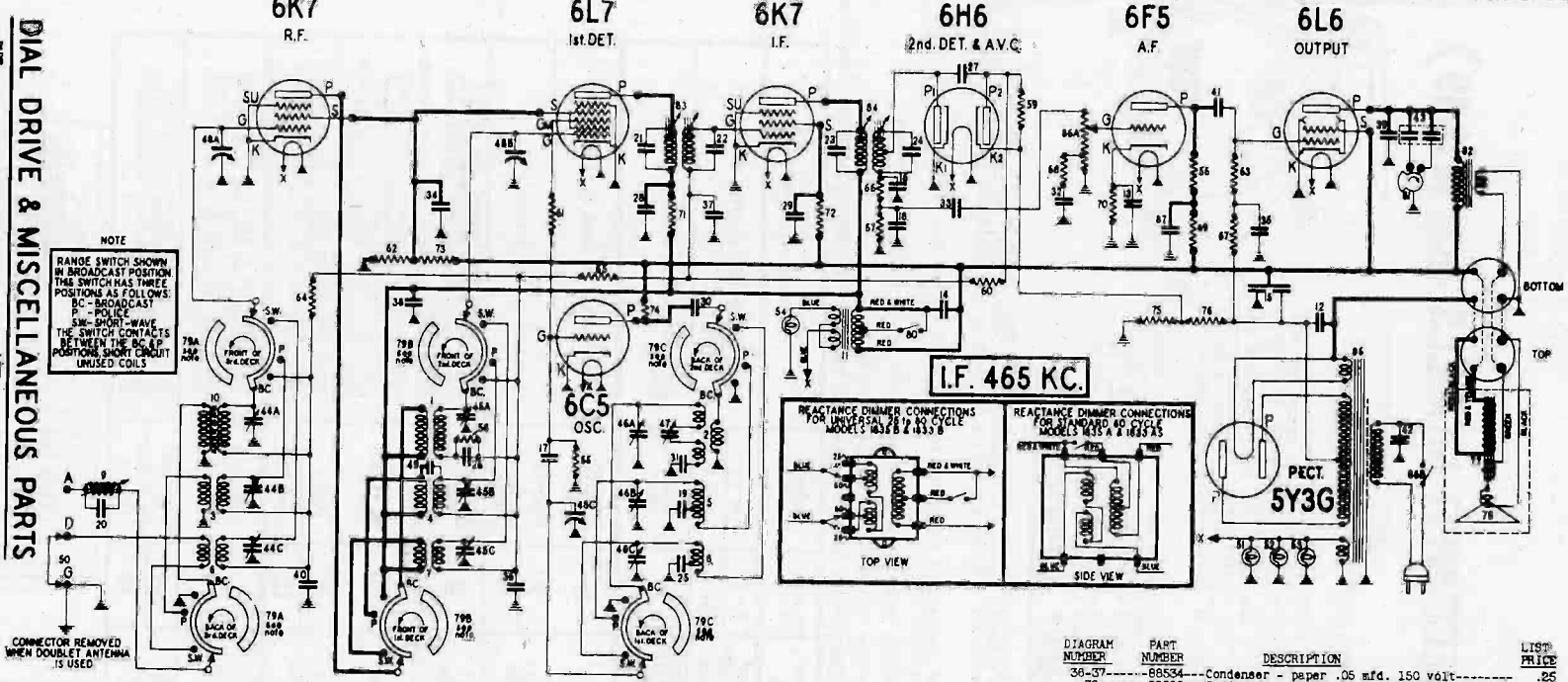

STEWART-WARNER
MODEL R-183 CHASSIS
(RECEIVER MODELS 1831 to 1839)

DIAGRAM NUMBER	PART NUMBER	DESCRIPTION	LIST PRICE
1	111056	Coil - R.F. (broadcast)	$1.25
2	111057	Coil - oscillator (broadcast)	1.05
3	111058	Coil - antenna (police)	.80
4	111059	Coil - R.F. (police)	1.05
5	111060	Coil - oscillator (police)	1.00
6	111062	Coil - antenna (short-wave)	.90
7	111063	Coil - R.F. (short-wave)	.90
8	111064	Coil - oscillator (short-wave)	.85
9	111079	Coil - antenna trap	1.20
10	111103	Coil - antenna (broadcast)	1.82
11	111191	Coil - reactance dimmer (60 cycle)	2.25
	112201	Coil - reactance dimmer (25 to 60 cycle)	.48
	89837	Condenser - electrolytic 30 mfd. 450 volt	1.60
12	112316	Condenser - elec. 16 mfd. 450 volt (for 183-AS or 183-BS armchair models)	1.55
13-14	110377	Condenser - electrolytic 10 mfd. 25 volt	.80
15	111098	Condenser - electrolytic dual 8 mfd.	2.00
16	83539	Condenser - mica 260 mmfd.	.20
17-18	85061	Condenser - mica 51 mmfd.	.15
19	85487	Condenser - mica 1370 mmfd. (3%)	.30
20	88205	Condenser - mica 2100 mmfd.	.35
21-22	110952	Condenser - mica 100 mmfd. (5%)	.18
23	110958	Condenser - mica 70 mmfd. (5%)	.18
24	110958	Condenser - mica 80 mmfd. (5%)	.18
25	111122	Condenser - mica 3560 mmfd. (3%)	.48
26	111123	Condenser - mica 7750 mmfd. (5%)	.65
27	85061	Condenser - mica 51 mmfd.	.15
28-29	88029	Condenser - paper .004 mfd. 400 volt	.25
30-31-32	88030	Condenser - paper .01 mfd. 400 volt	.25
33	88189	Condenser - paper .05 mfd. 400 volt	.25
34	88191	Condenser - paper .1 mfd. 600 volt	.25
35	88193	Condenser - paper .25 mfd. 150 volt	.35
36-37	88534	Condenser - paper .05 mfd. 150 volt	.25
38	88682	Condenser - paper .1 mfd. 400 volt	.25
39	89828	Condenser - paper .004 mfd. 750 volt	.24
40	111117	Condenser - low loss .05 mfd. 150 volt	.35
41	111252	Condenser - paper .05 mfd. 400 volt	.13
42	83976	Condenser - shielded .012 mfd. 1000 volt	.40
43	111364	Condenser - shielded (Sect. A - .02 mfd. 600 volt) (Sect. B - .03 mfd. 600 volt)	.65
44A to C / 45A to C	111078	Condenser - trimmer (3 section) for R.F. or antenna (all bands)	.75
46A to C	111089	Condenser - trimmer (3 section) for oscillator (all bands)	.75
47	111115	Condenser - pad (single section)	.63
46A to C	111073	Condenser - variable gang	6.25
49	111080	Condenser - 3 mmfd. (wire)	.10
50	85321	Connector - ground - Per C	.01
51-52-53	110629	Lamp - bayonet type (6.3 volt .25 amp.)	.15
54	110911	Lamp - dimmer reactor lamp 2.5 volt .5 amp.	.15
55	110552	Resistor - carbon 47,000 ohm 1/4 watt	.12
56-57-58	110553	Resistor - carbon 220,000 ohm 1/4 watt	.12
59-60	110559	Resistor - carbon 470,000 ohm 1/4 watt	.12
61	110560	Resistor - carbon 100 ohm 1/4 watt	.12
62	110562	Resistor - carbon 22,000 ohm 1/2 watt	.12
63-64-65	110564	Resistor - carbon 100,000 ohm 1/4 watt	.12
66-67	110565	Resistor - carbon 22,000 ohm 1/4 watt	.12
68-69	110566	Resistor - carbon 33,000 ohm 1/4 watt	.12
70	110572	Resistor - carbon 4,700 ohm 1/4 watt	.12
71	110573	Resistor - carbon 2,200 ohm 1/4 watt	.12
72	110574	Resistor - carbon 68,000 ohm 1/4 watt	.12
73	110575	Resistor - carbon 12,000 ohm 2 watt	.30
74	110592	Resistor - carbon 22,000 ohm 1 watt	.12
75	111119	Resistor - wire wound 30 ohm 1/2 watt (5%)	.12
76	111120	Resistor - wire wound 110 ohm 2 watt (5%)	.12
77	R-281-A	Speaker - dynamic 12 inch (R-1835)	10.00
	R-287-A	Speaker - dynamic 8 inch (R-1833)	8.75
78	111499	Cone - voice coil assem. for 12 inch spkr.	2.30
	112562	Cone - and voice coil (for 8 inch speaker)	1.90
79A to C	111077	Switch - range and bracket	3.30
80	111218	Switch - for reactance dimmer	.28
81	111234	Switch - tone control	.65
82	111074	Transformer - output	1.65
83	111081	Transformer - 1st I.F.	2.50
84	111082	Transformer - 2nd I.F.	2.45
85	111092	Transformer - power 115 volt 60 cycle	5.65
	112127	Transformer - power 115 volt 25 cycle	10.00
86A-86B	111096	Volume control - 200,000 ohms (with off-on switch)	1.25
87	88682	Condenser - paper .1 mfd. 400 volt	.25

(PRICES SUBJECT TO CHANGE WITHOUT NOTICE)

SOCKET VOLTAGES

ANTENNA GROUNDED — DIAL TUNED TO 525 KC.

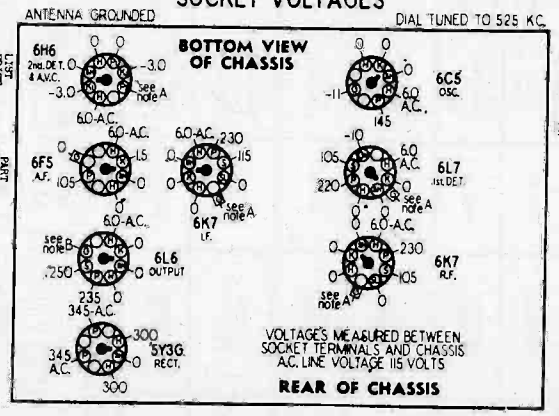

IMPORTANT: Use a high resistance voltmeter of 1000 ohms per volt.

NOTE A: The bias for the control grid of the 6K7 R.F., 6L7 mixer, 6K7 I.F. and the diode plate of the 6H6 tubes is -3 volts measured across resistor 75.

NOTE B: The bias for the control grid of the 6L6 output tube is -13 volts measured across resistors 75 and 76.

DIAL DRIVE & MISCELLANEOUS PARTS

PART NUMBER	DESCRIPTION	LIST PRICE
111208	Band indicator - frame & scale	$ .48
111209	Bracket - chassis hanging (flat-left side)	.30
111179	Bracket - chassis hanging (flat-right side)	.30
111201	Bracket - dial support (L.H.)	.46
111202	Bracket - dial support (R.H.)	.46
112301	Bracket - for chassis mtg. (armchair)	.40
110782	Cord - for band indicator (2 req.)	.10
111302	Cord - drive (order 4 - 88348 eyelets) (6 ft.)	.30
	24 required for pointer dr.	
111233	Dial - frame & scale complete	2.50
111317	Drum - & bushing	.45
88348	Eyelet - for cord drive - Per dz.	.06
112205	Escutcheon - for dial (with glass)	3.00
111310	Flywheel - with setscrews	1.25
111209	Gear - and shaft (for rope drive)	.70
112305	Glass top - large sect. (armchair model)	2.90
110675	Knob - for small section (with knob)	3.15
112125	Knob - tuning, tone & volume	.12
112322	Knob - brass (for glass top)	.75
110496	Lever - for band indicator (on shaft)	.12
111236	Pointer - speaker and slide (one)	.95
81145	Retaining ring - for drive shaft - Per C	.12
111222	Scale - dial - frame	1.20
124350	Spring - torsion for band indicator	.06
110710	Spring - coil (between flexible couplers)	.20
87508	Terminal strip - O.D.A.	.05
111206	Screw - hanger mtg. (right) - Per dz.	.06
88346	Screw - hanger mtg. (left) - Per dz.	.06
112136	Setscrew - slotted (round head) 6/32	.05
112205	Escutcheon - for dial (with glass)	.40

PART NUMBER	DESCRIPTION	LIST PRICE
110627	Socket - 8 prong octal	.15
110628	Socket - miniature (4 prong)	.15
110708	Socket - band indicator lamp	.16
110917	Speed nut - retainer for secu. to cab.	.01
85815	Spring - between gears (to [illegible])	.02
111221	Spring - pointer (on pointer slide)	.02
111232	Spring - torsion for band indicator	.02
124350	Spring - coil (between flexible couplers)	.20
87508	Terminal strip - O.D.A.	.05
89837	Washer - electrolytic mtg.	.05
89746	Washer - (paper) for back of woods	.005
112282	Washer - flat steel mtg. (15/16" O.D.)	.02

FORM NO. 8464 PRINTED IN U.S.A.

©John F. Rider, Publisher

MODELS 1831-1839 incl.
Chassis R-183
Alignment, Trimmers
Dial Data

STEWART-WARNER CORP.

MODEL R-183 CHASSIS (RECEIVER MODELS 1831 to 1839)

HOW TO REPLACE THE DIAL CORD

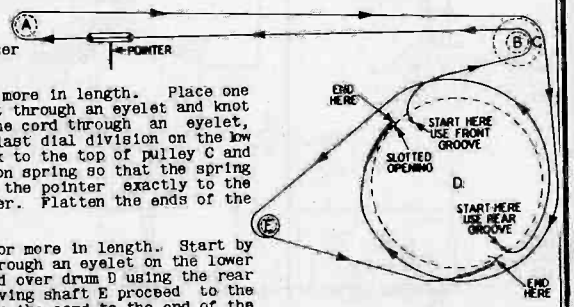

Before attempting to replace either dial cord, fully mesh the gang condenser plates. The holes in drum D should be in the position shown in the diagram.

REPLACING THE POINTER DRIVE CORD: The pointer drive cord should be 40 inches or more in length. Place one end of the cord through the upper hole in the front groove of the drum. Put it through an eyelet and knot the end. Flatten the eyelet. Run the free end up over pulley B. Then thread the cord through an eyelet, the pointer slider, and another eyelet. (See diagram). Set the pointer to the last dial division on the low frequency end of the scale. After this run the cord up over pulley A and back to the top of pulley C and down around drum D, using the front groove. Tie the cord to the end of the tension spring so that the spring will be extended to 1-1/8 inches when hooked to the slot in the drum. Now set the pointer exactly to the last low frequency dial scale division and push the eyelets into the pointer slider. Flatten the ends of the eyelets to hold the slider in position on the cord.

CONDENSER DRIVE CORD: The cord for the main condenser drive should be 19 inches or more in length. Start by placing an end of the cord through the lower hole in the rear groove. Put it through an eyelet on the lower side of the drum and tie a knot in the end. Run the loose end of the cord up and over drum D using the rear groove. Then take the cord down to shaft E and wind 1-1/2 turns around it. Leaving shaft E proceed to the lower side of drum D and place the tension spring on the end of the cord. Tie the cord to the end of the tension spring so that the spring will be extended 1-1/8 inches when hooked to the slot in the drum.

ALIGNMENT EQUIPMENT & PROCEDURE

1. With the gang condenser in full mesh the dial pointer should stop opposite the last low frequency scale division. If the pointer is off not more than one scale division, release the setscrew on the flexible coupler and keeping gang closed, turn the tuning knob until the pointer stops in the correct position. Then retighten the setscrew. If the pointer is off several dial divisions it will be necessary that you release the cord at the slider and reset it.
2. Connect the output meter between the plate of the 6L6 and the chassis, or across the voice coil of the speaker, depending on the type of meter. The more sensitive type should be connected across the voice coil.
3. Connect the ground lead of the signal generator to the chassis and leave it there throughout the entire alignment procedure.
4. Turn the volume control to maximum volume position. Turn the tone control to the brilliant position.
5. KEEP THE GROUND AND DOUBLET CONNECTIONS, ON THE ANTENNA TERMINAL STRIP, CONNECTED TOGETHER THROUGHOUT THE ENTIRE ALIGNMENT PROCEDURE.

DUMMY ANT. IN SERIES WITH SIG. GEN.	CONNECTION OF SIG. GENERATOR OUTPUT TO RECEIVER	SIGNAL GENERATOR FREQUENCY	RANGE SWITCH POSITION	RECEIVER DIAL SETTING	TRIMMER NUMBER	TRIMMER DESCRIPTION	TYPE OF ADJUSTMENT
.1 MFD. CONDENSER	CONTROL GRID OF 6L7 TUBE	465 KC.	BROADCAST (Counter-clock-wise)	ANY POINT WHERE IT DOES NOT AFFECT THE SIGNAL	1-2	1ST I.F.	ADJUST FOR MAXIMUM OUTPUT. THEN REPEAT ADJUSTMENT.
					3-4	2ND I.F.	
400 OHM CARBON RESISTOR	ANTENNA TERMINAL	465 KC.	BROADCAST (Counter-clock-wise)	ANY POINT WHERE IT DOES NOT AFFECT THE SIGNAL	5	WAVE TRAP	ADJUST FOR MINIMUM OUTPUT WITH STRONG SIGNAL.
400 OHM CARBON RESISTOR	ANTENNA TERMINAL	1500 KC.	BROADCAST (Counter-clock-wise)	1500 KC.	6	BROADCAST OSCILLATOR (Shunt)	ADJUST TRIMMER TO BRING IN SIGNAL.
400 OHM CARBON RESISTOR	ANTENNA TERMINAL	1500 KC.	BROADCAST (Counter-clock-wise)	TUNE TO 1500 KC. GENERATOR SIGNAL	7	BROADCAST R.F.	ADJUST FOR MAXIMUM OUTPUT.
					8	BROADCAST ANTENNA	
400 OHM CARBON RESISTOR	ANTENNA TERMINAL	600 KC.	BROADCAST (Counter-clock-wise)	TUNE TO 600 KC. GENERATOR SIGNAL	9	BROADCAST OSCILLATOR SERIES PADDER	ADJUST FOR MAXIMUM OUTPUT. TRY TO INCREASE OUTPUT BY DETUNING TRIMMER AND RETUNING RECEIVER DIAL UNTIL MAXIMUM OUTPUT IS OBTAINED.
400 OHM CARBON RESISTOR	ANTENNA TERMINAL	5.0 MC.	POLICE (Center)	5.0 MC.	10	POLICE OSCILLATOR (Shunt)	ADJUST TO BRING IN SIGNAL. CHECK TO SEE IF PROPER PEAK WAS OBTAINED BY TUNING IN IMAGE AT APPROX. 4.1 MC. IF IMAGE DOES NOT APPEAR REALIGN AT 5.0 MC. WITH TRIMMER SCREW FARTHER OUT. RECHECK IMAGE.
400 OHM CARBON RESISTOR	ANTENNA TERMINAL	5.0 MC.	POLICE (Center)	TUNE TO 5.0 MC. GENERATOR SIGNAL	11	POLICE R.F.	ADJUST FOR MAXIMUM OUTPUT. TRY TO INCREASE OUTPUT BY DETUNING TRIMMER AND RETUNING RECEIVER DIAL UNTIL MAXIMUM OUTPUT IS OBTAINED.
					12	POLICE ANTENNA	
400 OHM CARBON RESISTOR	ANTENNA TERMINAL	16.0 MC.	SHORT-WAVE (Clock-wise)	16.0 MC.	13	SHORT-WAVE OSCILLATOR (Shunt)	ADJUST TO BRING IN SIGNAL. CHECK TO SEE IF PROPER PEAK WAS OBTAINED BY TUNING IN IMAGE AT APPROX. 15.1 KC. IF IMAGE DOES NOT APPEAR REALIGN AT 16 MC. WITH TRIMMER SCREW FARTHER OUT. RECHECK IMAGE.
400 OHM CARBON RESISTOR	ANTENNA TERMINAL	16.0 MC.	SHORT-WAVE (Clock-wise)	TUNE TO 16.0 MC. GENERATOR SIGNAL	14	SHORT-WAVE R.F.	ADJUST FOR MAXIMUM OUTPUT. TRY TO INCREASE OUTPUT BY DETUNING TRIMMER AND RETUNING RECEIVER DIAL UNTIL MAXIMUM OUTPUT IS OBTAINED.
					15	SHORT-WAVE ANTENNA	

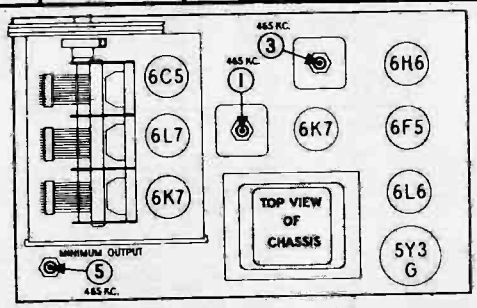

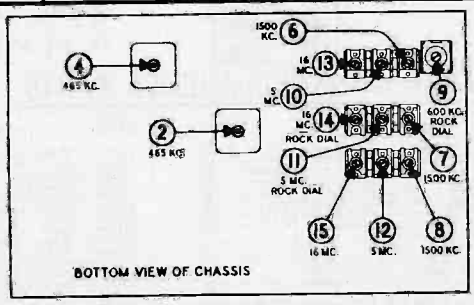

©John F. Rider, Publisher

Another

Supreme Publications

Radio Book

Supreme Publications are Available at All Leading Radio Jobbers