HOW PRACTICAL REQUIREMENTS CHANGED RECEIVER CIRCUITS

18FR-2

NATIONAL RADIO INSTITUTE

ESTABLISHED 1914

WASHINGTON, D. C.

STUDY SCHEDULE NO. 18

A bird's-eye view of the rapid growth of radio, from the crystal set of three decades ago to the superheterodyne receiver of today, is presented in this book. Stirring history-making events like the sending of the first wireless signals across the Atlantic are interwoven with achievements of men like Marconi, De Forest, Armstrong, Hertz and hundreds of others. You will learn how each new receiver evolved logically from the preceding, and how practical requirements of the listening public resulted in one improvement after another.

This book is in its present position in your Course because a knowledge of the technical problems which have been solved by the pioneers in radio will help you to understand modern circuits. Also, some of these older receivers are still in use; the information given will be of real practical value when they require servicing, and will tell you what to expect from these older sets in the way of performance.

☐ **1. Radio Wireless** ..... **Pages 1-5**

Radio circuits from the earliest types up to the introduction of the three-element tube and audio amplification. Answer Lesson Questions 1, 2 and 3.

☐ **2. Radio Broadcasting is Born** ..... **Pages 5-9**

The first broadcasts; development of the t.r.f. receiver. Answer Lesson Questions 4 and 5.

☐ **3. Receivers Grow Up** ..... **Pages 10-16**

Simplified tuning; battery eliminators; the a.c. receiver; dynamic loudspeakers. Answer Lesson Questions 6, 7, 8 and 9.

☐ **4. Radio Comes of Age** ..... **Pages 16-23**

New tubes; the rise of the superheterodyne; midget, auto and farm receivers.

☐ **5. Modern Receiver Types** ..... **Pages 23-28**

Receiver comparisons; all-wave and high-fidelity types; the f.m. receiver. Answer Lesson Question 10.

☐ **6. Mail Your Answers for this Lesson to N.R.I. for Grading.**

☐ **7. Study One Circuit in Reference Text 17X.**

To get the most benefit from this valuable and practical reference text, study one circuit in it per lesson. One slow and careful reading will do, if you look at the diagram each time a part is mentioned. Do this for all the circuits, even though they may not be mentioned in the Study Schedules of other lessons.

☐ **8. Start Studying the Next Lesson.**

COPYRIGHT 1944 BY NATIONAL RADIO INSTITUTE, WASHINGTON, D. C.

FM15M847 1947 Edition Printed in U.S.A.

HOW PRACTICAL REQUIREMENTS CHANGED RECEIVER CIRCUITS

Radio Wireless

AFTER the first novelty of owning a radio wore off, back in the days when the radio industry was just getting started, owners of sets began to want something better. Receiver designers learned of these requirements and undertook research with a view to improving the receivers. New discoveries resulted and were quickly adopted; innovation followed innovation as consumers kept demanding better receivers.

► The circuit chosen for any particular receiver depends upon seven important technical requirements demanded by the public for that type of receiver:

1. *selectivity;*
2. *sensitivity;*
3. *fidelity;*
4. *power output;*
5. *signal-to-noise ratio;*
6. *interference reduction;*
7. *ease of operation.*

Today the radio engineer can produce receivers which meet the requirements of the public, but it took a long time to reach this stage. Early radio receivers were of decidedly limited ability.

So that you can better appreciate the technical perfection of the present-day radio receiver, as well as realize why various receiver models today differ so greatly from each other, we shall trace the development of radio receivers from the days prior to the crystal detector to the all-wave, high-fidelity superheterodyne receivers of today.

COHERERS TO DIODE DETECTORS

About 1864 James Clerk Maxwell, one of the great British scientists, predicted by means of complicated mathematics that an oscillating current would radiate electromagnetic waves which would be identical with light waves except for frequency. These predictions aroused considerable scientific argument. For twenty years Heinrich Hertz, a German scientist, attempted to prove that Maxwell's assumptions were wrong and that these electromagnetic waves could not exist. The results of these experiments quite surprised Hertz, finally converting him to the Maxwell theory. As a result, Hertz published in 1887 and 1889 the papers which brought him fame and gave to the world experimental proof that radio waves were entirely possible. Even today radio waves are designated by many people as *Hertzian waves.*

In 1890 Sir Oliver Lodge, another brilliant British scientist, actually set up an oscillating circuit (a charged condenser shunted by a heavy wire loop in series with a spark gap), and proved that another oscillatory circuit would pick up by induction the energy from the first circuit, if properly tuned.

The Coherer. The next important development before the actual sending of messages through the air was the coherer, a device which is based upon the fact that the enormous resistance offered to the passage of electric current by loose metal filings is greatly

reduced under the influence of alternating current.

In one very popular form, a coherer consisted of a two- or three-inch long glass tube, inside which were metal plugs spaced perhaps a quarter inch apart, with the space between the plugs filled with metallic filings. Various metals were used for the plugs or electrodes and for the filings. The passage of radio frequency current through the filings caused them to "cohere" or stick together, forming a conducting path for the direct current which actuated a telegraph sounder (an electromagnet which makes an audible click each time it operates). The great problem was to break up this path again after the r.f. current had ceased flowing; some experimenters mounted the coherer on a vibrating table, but the most popular arrangement was that used by Popoff of Russia and by Branly, in which a tapper attached to the telegraph sounder was used to jar the glass tube after the arrival of each signal.

► Scores of scientific men began experimenting with the newly-discovered Hertzian waves, each contributing additional data on the behavior of these waves, but it remained for Marconi in 1896 to combine the results of all these scientists and produce one simple and workable radio system. His early apparatus was capable of transmitting messages for only short distances, but on December 12, 1901 he used the transmitter and receiver shown in Fig. *1* to transmit three dots (the letter S) over and over again from Poldhu, England to St. Johns, Newfoundland. To Marconi rightfully belongs the title "father of wireless," for he coordinated the work of others and put wireless on a practical working basis. (Before the advent of broadcasting, *radio* was known as *wireless.*)

► In order to secure long-distance transmission in those days, it was necessary to use tremendously high-power oscillatory circuits, together with antennas much longer than those in common use today.

Having increased the power of transmitters to the practical limits of the time, scientists now turned their attention to improvements in receivers. The electrolytic detector, a fine platinum wire immersed in sulphuric acid, came into the picture around 1903. It was about this time also that the headphone unit used in telephone systems

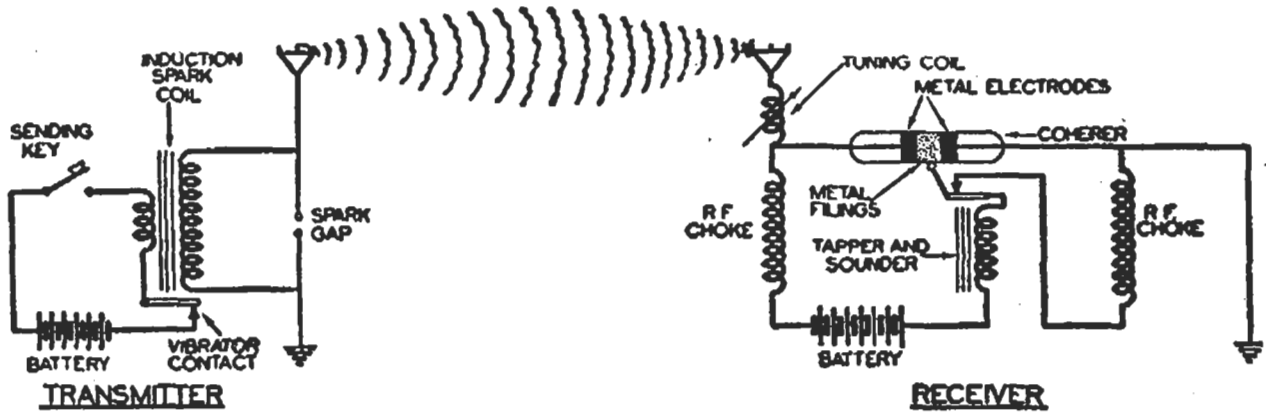

FIG. 1. Early Marconi wireless transmitting and receiving circuits. The vibrator at the transmitter operated as long as the key was pressed, interrupting the primary current of the induction coil and inducing in the secondary a high voltage. This high voltage caused an oscillatory spark discharge across the spark gap. The oscillations were radiated into space by the transmitting antenna, and induced r.f. currents in the receiving antenna. These currents made the coherer conductive, so that battery current passed through to operate the tapper and sounder. The buzzing sound of the tapper (an ordinary buzzer) was thus heard whenever the sending key was pressed.

was brought into play to replace the telegraph sounder used for wireless. This one step increased the sensitivity of receivers considerably.

Crystal Detectors. At about this same time the crystal came into widespread use as a more convenient and

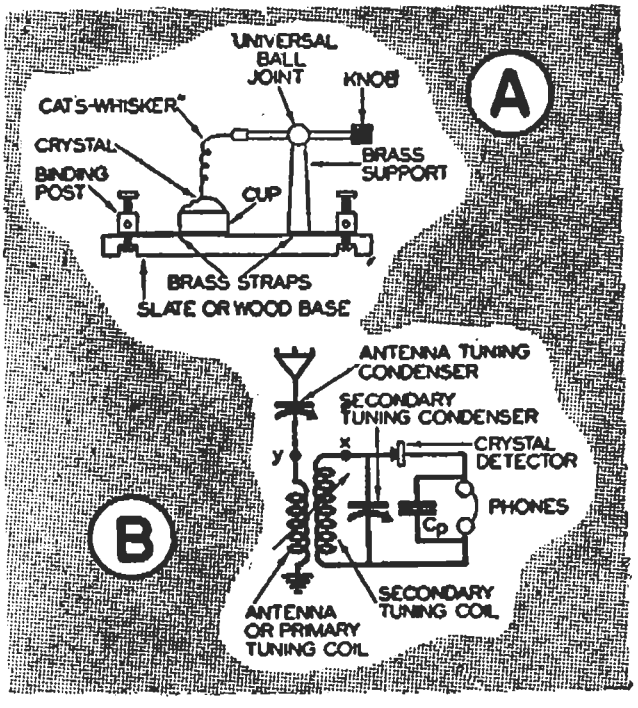

FIG. 2. A cross-section view of a typical crystal detector assembly is shown at A, and a typical crystal set diagram is shown at B.

more sensitive detector. Way back in 1874, Braun had discovered that two crystals making point-to-point contact with each other had a high resistance to the flow of current in one direction and a low resistance to current flow in the opposite direction. Single crystals in contact with a sharpened length of fine wire were found to give equally good rectifying action; materials such as galena, iron pyrite, fused silicon, carborundum, molybdenite, and other minerals came into use. A typical crystal detector is shown in Fig. *2A;* this has the necessary mechanical adjustment which permits setting the cat's-whisker at a spot on the crystal which gives good rectification.

With the development of more sensitive crystal detectors, together with sensitive headphones, long-distance reception became possible, and more and more transmitters went on the air. These were all code or telegraph transmitters, of course, and were operating on wavelengths longer than 600 meters (lower than 500 kc.). Congestion of the airways became severe, and steps were taken to make transmitters use narrower bands of frequencies and to make receivers more selective.

One of the earliest schemes for improving the selectivity (station-separating ability) of a receiver was the use of variable coupling between the antenna coil and the secondary coil, as illustrated in Fig. *2B*. Additional coils, known as *loading coils*, were sometimes inserted in the tuning circuits at points x and y to increase the circuit inductance and thus give reception on the longer wavelengths (lower frequencies).

The Diode Tube. In 1904 Dr. Fleming invented the diode vacuum tube, then known as the *Fleming valve*.

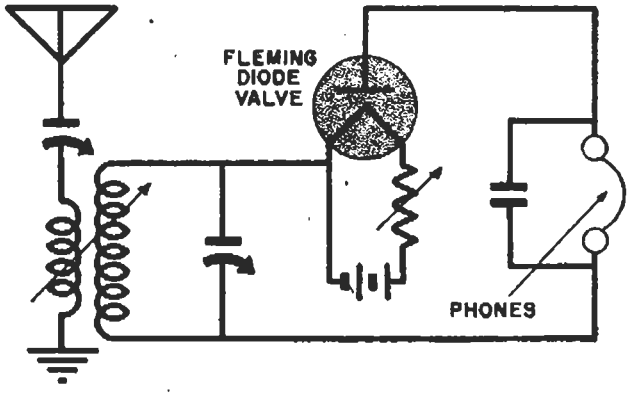

FIG. 3. An early diode tube detector circuit.

This contained a wire filament heated by direct current, and a metal plate or anode mounted a short distance away, both electrodes being enclosed in an evacuated glass envelope. A typical Fleming valve detector circuit is shown in Fig. *3*. The same tuning controls are used here as in the crystal detector circuit of Fig. *2B* to secure the required selectivity. Actually the two circuits

are identical except for the type of detector used.

DE FOREST INTRODUCES TRIODE TUBES

The introduction of the grid in the Fleming diode tube by Lee De Forest in 1909 was an outstanding contribution to the radio art, and revolutionized the entire radio industry. The De Forest triode tube was first used only

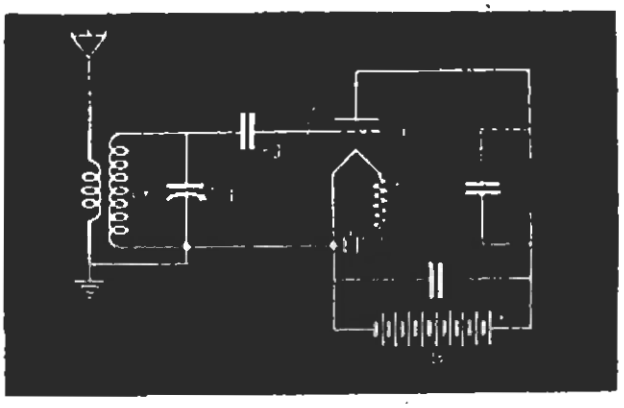

FIG. 4. One of the first triode tube detector circuits.

in detector circuits, where it provided a considerable amount of signal amplification in addition to demodulation.

A typical triode detector circuit is shown in Fig. *4*. The output of the tuned circuit L_T-C_T was fed to the grid and filament of the triode tube through series condenser C_g. The headphones, in series with a 22½- to 45-volt battery, were connected between the plate and filament of the tube. It was found that a leaky condenser gave best results for C_g (the reason for this was not at first apparent, but is now fully understood — the intelligence signal voltage was developed across the resistance of this leaky condenser and then amplified by the triode tube). Thus the filament and grid of the tube together acted as a diode rectifier, while the entire tube acted as a low-frequency amplifier. This circuit (known as a grid-leak and condenser detector) is still used to a certain extent.

Early triode tubes were rather poorly evacuated and therefore contained a certain amount of gas. This gas made possible a larger plate current than would exist in a pure vacuum. These gas tubes were commonly known as "soft" tubes and made very sensitive detectors. However, they were difficult to adjust properly as detectors, they were noisy, and their useful life was very short. Improving the vacuum in the tube (giving a so-called "hard" tube) gave better stability and longer life, but somewhat poorer sensitivity.

► The loss in sensitivity through the use of a hard tube was more than overcome by the invention of regeneration by De Forest in 1912 and by Armstrong in 1914. A simplified form of this regenerative circuit is shown in Fig. *5;* here the modulated r.f. current

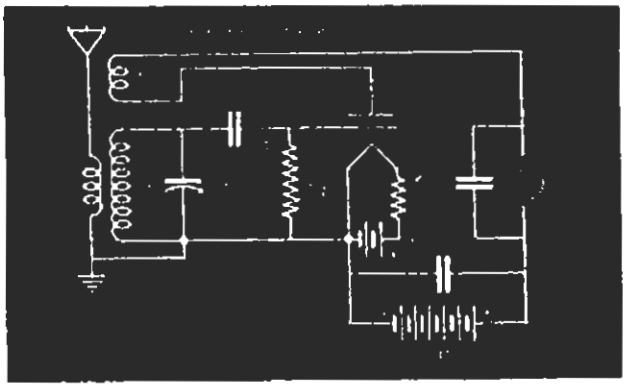

FIG. 5. The introduction of regeneration resulted in a tremendous increase in sensitivity. As condensers were improved, the grid leak R_g became necessary.

which exists in the plate circuit is fed back to the input circuit to reinforce the incoming signal. In the hands of an expert the regenerative detector gave amazing results, setting up new and more consistent long-distance receiving records.

AUDIO AMPLIFICATION

Attempts to bring up the volume of very weak code signals by increasing the feedback of a regenerative detector were decidedly unsatisfactory, for the

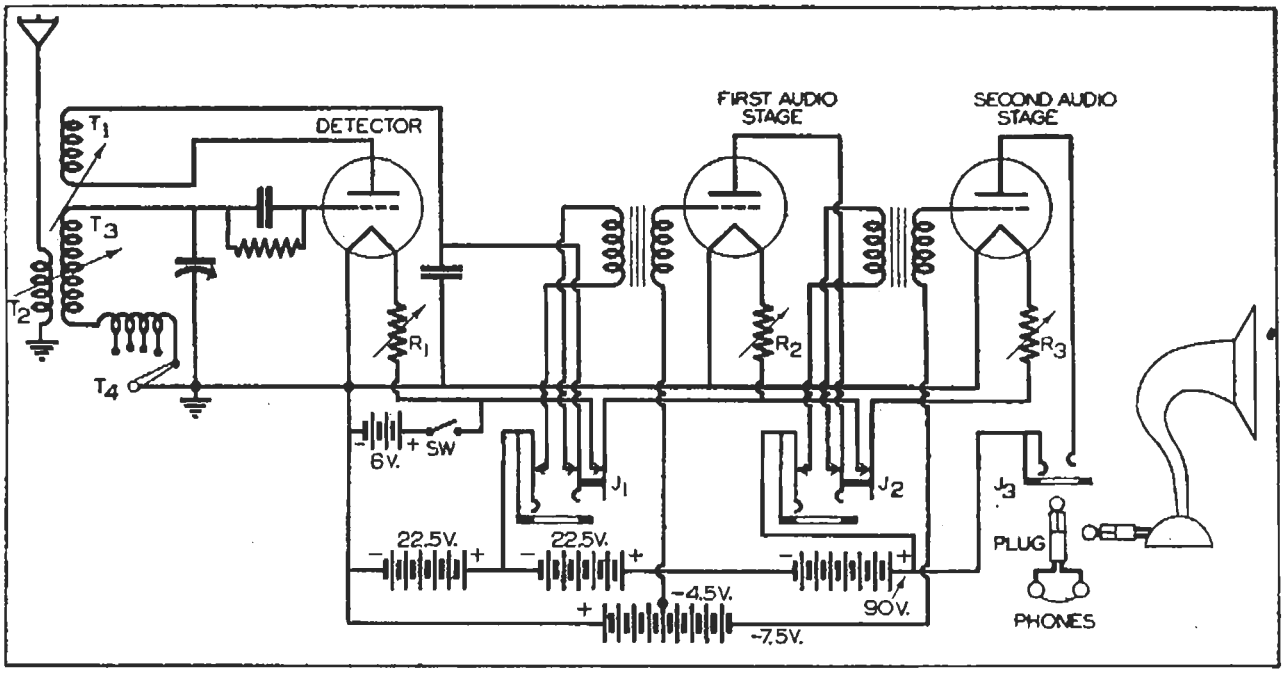

FIG. 6. A regenerative receiver of 1920-1924 vintage, having two a.f. stages. These receivers had an ON-OFF switch SW; separate filament controls R_1, R_2 and R_3; a tuning condenser; a regeneration control varying the coupling between T_1 and T_3; variable coupling between T_2 and T_3 and sometimes a tapped loading coil arrangement like T_4 to extend the tuning range. Thus, there were seven or eight controls on the panel of these receivers. When receiving strong signals, phones could be plugged into jack J_1, which disconnected the a.f. tube filaments, prolonging both tube and battery life. With the phones plugged into J_2, only the first a.f. stage was in use, while full amplification for weak signals was obtained with the phones in J_3. The first horn speakers could be plugged into J_3 also.

circuit became unstable and often went into oscillation, producing very annoying squeals. Practical requirements demanded amplification of weak but clearly demodulated signals — audio amplification.

As soon as suitable tubes were available, one or more stages of audio amplification were added to the regenerative detector to increase the volume of weak code signals. Plug-in jacks were provided for each stage, as in the typical circuit shown in Fig. *6*, so that headphones could be inserted either in the detector stage, the first audio stage or the second audio stage. This was a crude but effective means of controlling volume. Although this was a great improvement over any other receiver available at the time, manufacturers of radio apparatus were not yet ready to scrap the then widely used crystal detectors; they simply manufactured a separate two-stage audio amplifier which could be connected to the output of any crystal detector.

Radio Broadcasting is Born

With code wireless an established fact, engineers turned their attention to the transmission of voice and music through the air. The old spark coil transmitter, with its highly damped oscillations, was clearly inadequate for the transmission of voice signals. In 1903 Poulsen had perfected a generator of high-frequency current which utilized an electric arc; he showed experimentally that telephonic communication through space over very short

distances was entirely possible with his transmitter if a microphone were used to modulate the radio waves. The Poulsen arc transmitter was used extensively for code transmission, but did not prove entirely satisfactory for voice signals.

► A high-frequency dynamo-electric generator was designed and constructed by Fessenden in 1906 for the production of continuous waves; with it he was able to transmit telephone messages for 15 miles.

► De Forest in 1907 was the first to use wireless for the broadcasting of phonograph records; he placed his musical program on the air without

FIG. 7. A photograph of an early receiver.

preliminary announcement, completely surprising the wireless code operators on duty at the time.

► The invention of the triode vacuum tube and its development as an oscillator for the generation of high-frequency current resulted in the world-famous demonstration on December 30, 1915, when the government radio station at Arlington, Virginia, succeeded in sending telephone messages through the air to Honolulu, Hawaii and Paris, France.

► During World War I (1914-1918) the large electrical manufacturers in this country had developed elaborate wireless research and manufacturing departments for the production of radio apparatus for the government. The close of the war marked the collapse of the market for their products, and naturally these manufacturers tried to find new ways of stimulating wireless activities and creating new markets. The Westinghouse Electric and Manufacturing Company, believing that the future of radio was in the direction of voice and music broadcasting, delegated Frank Conrad to carry out research work along this line. Fortified with a vast amount of wireless experience, the latest scientific aids, and practically unlimited manufacturing facilities, Conrad developed the first broadcasting station. For months radio amateurs in the vicinity of Pittsburgh listened with interest to experiments in broadcasting, and then, on November 2, 1920, Westinghouse Radio Station KDKA astonished the world by broadcasting the results of the presidential election.

Wireless gradually came to be known as radio, and every one wanted to listen in on the broadcasts. Shortly after this epoch-making broadcast, Westinghouse opened Radio Station WJZ in New York City, the first *commercial* broadcasting station. Station after station sprang into existence—broadcasting swept the country, expanding into a vast industry and proving correct the early prophecies of Westinghouse.

► The nuisance of having to wear headphones whenever listening to radio broadcasts had long been recognized as a distinct drawback to the universal popularity of radio. In 1921 a megaphone was attached to an electromagnetic headphone unit, forming the first practical loudspeaker. The vibrating diaphragm of the phone unit, acting in conjunction with the outward flaring curve of the megaphone, served to excite the surrounding air waves so that all the persons in a room could

Courtesy Pittsburgh Post

Broadcasting the election returns over KDKA on November 2, 1920. This historic picture shows the station engineer, announcer, two newsmen, and the transmitter.

listen to a single program. The immediate acceptance of this rather crude loudspeaker quickly resulted in the development of the balanced armature unit which gave greater diaphragm movement and consequently greater sound output.

During the period between 1922 and 1924, the receiver circuit shown in Fig. 5, used with batteries and a horn-type loudspeaker, was the accepted standard. At this stage in the development of radio, people wanted plenty of "gadgets" on their receivers; the more controls a receiver had, the better it was received by the public. A typical receiver is shown in Fig. 7.

Another form of regenerative receiver was developed about this time. This circuit, known as the super-regenerative, had a special means of preventing oscillation, so the set could operate at the point of maximum amplification. However, the circuit had extremely poor selectivity. It tuned so broadly it could not be used in crowded wavebands and thus lost favor.

T.R.F. RECEIVERS

Regenerative receivers had one very serious fault; they would feed energy

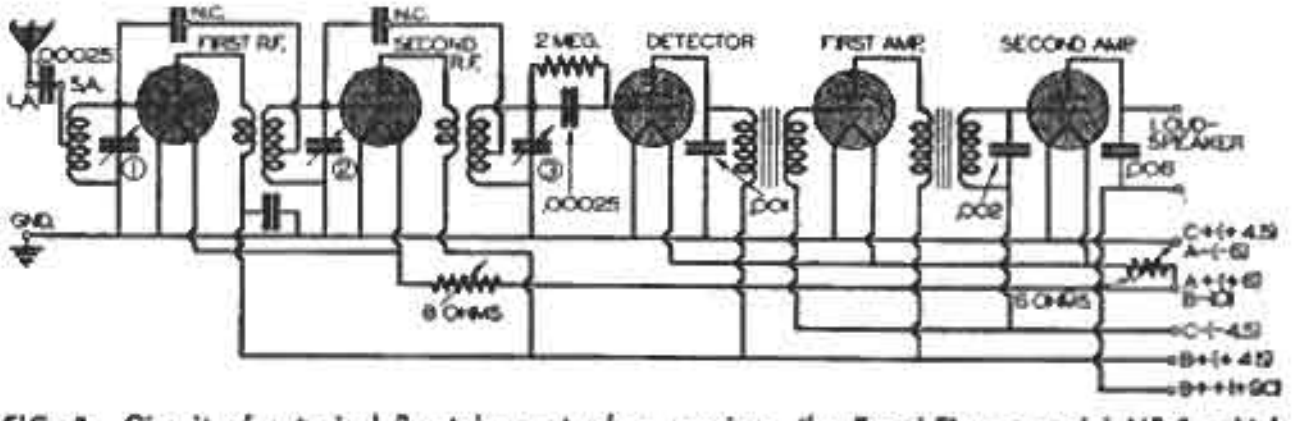

FIG. 8. Circuit of a typical five-tube neutrodyne receiver, the Freed-Eisman model NR-5, which appeared in 1925. Feedback in the r.f. stages was cancelled out by adjusting the neutralizing condensers marked N.C.

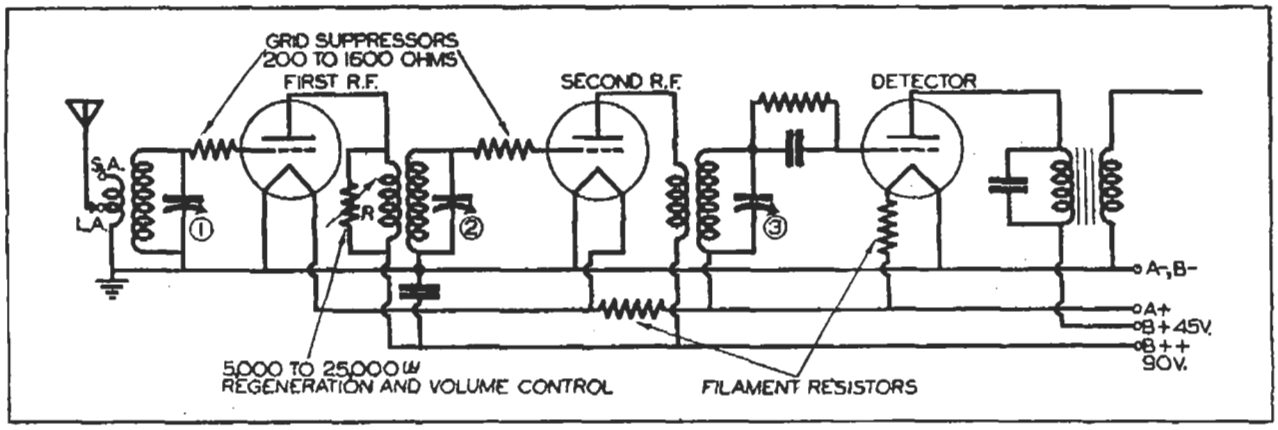

FIG. 9. The t.r.f. amplifier and detector section of a receiver which was popular about 1926. The grid leak and condenser detector was usually followed by two stages of a.f. amplification.

back into the receiving antenna, and this would be radiated, interfering with reception of signals by other receivers in the immediate neighborhood. Owners of radio receivers did not enjoy listening to ear-splitting squeals each time their neighbors decided to tune in a new station, and thus the public created a demand for the next improvement.

Around 1925 engineers seriously began to consider replacing regenerative circuits with circuits using r.f. amplification ahead of a non-regenerative detector. The big problem was making the then available vacuum tubes amplify r.f. signals without causing feedback which would result in shrill squeals accompanying the desired program. The neutrodyne circuit, as developed by Hazeltine, effectively prevented r.f. feedback and proved the solution to this problem.

A typical neutrodyne circuit, as used in receivers of this period, is shown in Fig. *8*. There were three tuning dials, one for each resonant circuit tuning condenser in the r.f. tube stages and the detector. Other controls included a rheostat for varying the filament current to the detector and two a.f. amplifier tubes, and another rheostat to control the filament current to the r.f. amplifier tubes. Plug-in jacks (omitted for simplicity in the diagram) were inserted in each audio stage to allow the listener to use headphones instead of the less-sensitive loudspeaker on weak distant stations. People still insisted upon being able to stay up into the wee hours of the morning, with headphones "glued" to their ears, trying for coast-to-coast reception. The neutrodyne receiver of 1925 was heralded as the marvel of its day.

This "squeal-less" radio receiver captivated the attention of the radio public. Many manufacturers turned over their entire facilities to the production of these receivers under the Hazeltine patent, in order to meet the rapidly growing demand. Other manufacturers developed their own r.f. feedback cancellation systems, all attempting to balance out the plate-to-grid circuit feedback voltage with an equal and opposite voltage.

Some manufacturers attempted to get around the neutrodyne patent by developing tuned radio frequency circuits which had enough loss in each r.f. stage to absorb the feedback energy and prevent squeals. This "losser" method proved fairly successful.

Grid suppressors, connected as shown in Fig. *9*, also came into use as cures for feedback troubles in some of the earlier t.r.f. receivers.

► Other circuit improvements inaugurated at about this period included a variable resistor connected across the primary of the second tuned r.f. trans-

former for the purpose of controlling regeneration and volume. Fixed resistors and ballast resistors (such as the Amperite) in the filament circuits made it unnecessary to adjust filament current. Three tuning controls and a volume control now were all the adjustments used for a standard receiver.

The schematic circuit diagram of a tuned radio frequency amplifier using a grid-leak-condenser detector is shown in Fig. *9*. Receivers of this type were designed to regenerate slightly when resistor *R* was set at its highest ohmic value, thus giving perfect control and high r.f. gain.

evident, and the popularity of home-made receivers began to fade.

Out of this period of home-made receivers there stands out one receiver which gave exceptionally good performance. This receiver contained a neutralized t.r.f. amplifier ahead of a regenerative detector, and was commonly known to the old-timers as the Browning-Drake receiver, after its inventors. The circuit diagram for this receiver is given in Fig. *10*; one stage of audio application is shown here, but ordinarily a power stage was also used to provide loudspeaker operation. ► Home set-building died a natural

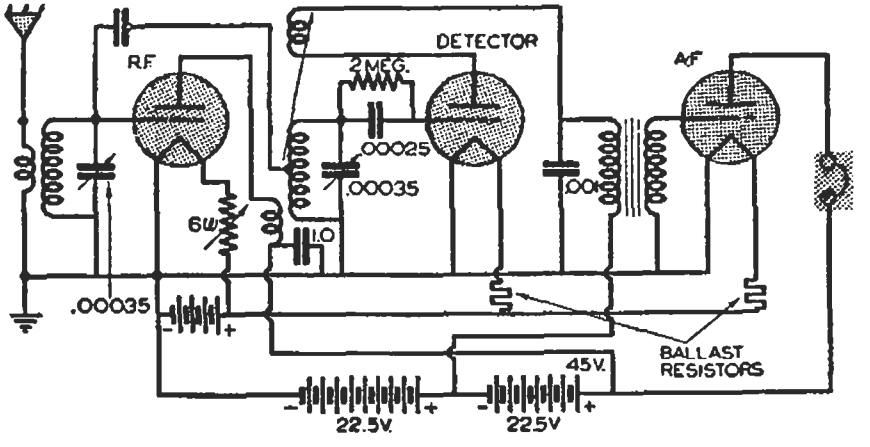

FIG. 10. One form of the famous Browning-Drake receiver circuit, the hit of the 1925-1927 period of home-made receivers.

HOME-MADE RECEIVERS

From the very first days of wireless, the building of radio receivers in homes was a popular hobby. When radio broadcasting began, many more thousands joined the ranks of receiving set builders. Sets were first built from wiring diagrams, but soon complete kits of parts were made available. In those days just as many radio receivers were home-made as were produced by manufacturers. Gradually, however, as manufacturing techniques were placed on a production basis, the economy and superiority of commercial sets became death soon after the introduction of the superheterodyne, primarily because of the increasing complexity of receiver circuits and the necessity of having special instruments for aligning the superheterodyne. Today, people who build their own receivers usually buy complete kits of parts, but the number of these experimenters is relatively small because little or no money can be saved. Modern radio factories, buying parts in very large quantities and using mass production techniques, can assemble complete receivers for less than the price which an experimenter would have to pay for the parts alone.

Receivers Grow Up

The advent of t.r.f. receivers of the neutrodyne and grid suppressor types changed radio from a fad to an established industry, but prior to 1926 it was still looked upon as a fall-winter-spring affair. The radio industry struggled and worried through the summer months, wondering if business would return again in the fall. It did come back, bigger and better than ever each fall; with confidence established, business men began to invest great sums of money in radio. These investors could see no real reason for the summer slump, and demanded an organized effort to bridge the gap. Broadcasting stations boosted their power during the summer months, better and better programs were put on the air, and reasons for the summer slump in radio popularity were studied.

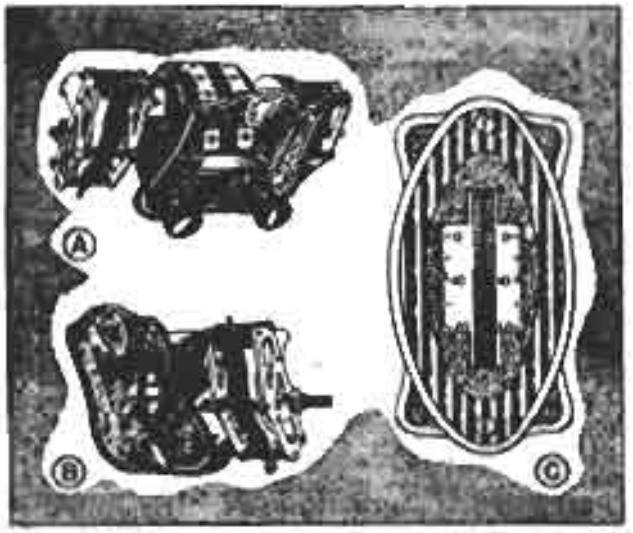

FIG. 11. Types of tuning dials in common use during the period when radio was passing from multi-dial to single-dial control.

SIMPLIFIED TUNING

It was found that many people objected to three-dial receivers on the basis that they had only two hands with which to tune. It was found that two of the three tuning circuits could be made to operate exactly alike; referring to Figs. *8* and *9* where the tuning circuits are marked *1*, *2* and *3*, manufacturers designed circuits *2* and *3* to tune exactly alike, permitting control of the two tuning condensers with a single dial. Naturally, to increase ease of tuning, it was desirable to have the dial of circuit *1* (the input tuning circuit) have the same reading as the single dial used for circuits *2* and *3* when the set was tuned to a station. But the effects of the antenna on circuit *1* were quite marked—if the input circuit were designed for a short antenna (S.A.), then the connection of a long antenna (L.A) would make the dial reading for tuning condensers *2* and *3* differ as much as ten dial divisions from that for tuning condenser *1*. The difference in the characteristics of long and short antennas was overcome by providing two antenna posts, one for a long antenna and one for a short antenna; with the antenna connected to the proper post, and condensers *2* and *3* ganged together, a two-dial receiver was obtained. One form of two-dial control is illustrated in Fig. *11A*; the third condenser was attached to the shaft of one of the two condensers shown.

The next step in the simplification of tuning was the introduction of drum dials, which permitted adjusting the two tuning controls either separately or together. The face of one of these two-drum controls is shown in Fig. *11C*; one drum controlled the condensers for tuning circuits *2* and *3*, and the other controlled the single antenna tuning condenser. Some receivers used three separate drum dials, one for each condenser, while others had all three condensers controlled by a single dial, like that shown in Fig. *11B*, for rough

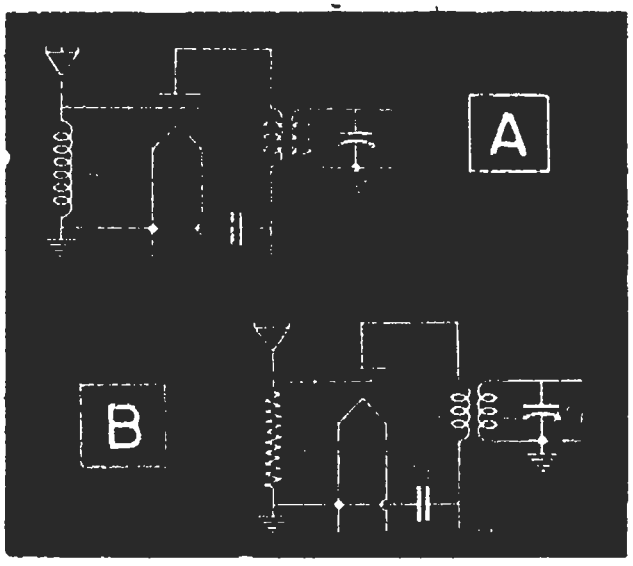

FIG. 12. Two forms of untuned antenna circuits used with t.r.f. receivers.

tuning to a station, and had some means for making fine (vernier) adjustments of each condenser when more accurate tuning was desired.

► The ideal single-dial receiver was still sought by radio designers and by the public, for with it even a child would be able to tune in radio broadcasts correctly and easily. It was fully realized that the antenna circuit was the trouble-maker. Untuned antenna circuits like those shown in Figs. *12A* and *12B*, followed by two stages of tuned r.f. amplification (three variable condenser circuits), were tried but found unsatisfactory. The trouble was that in the vicinity of powerful local stations, the strong r.f. input signal reaching the first r.f. amplifier tube would make that tube work as a detector, and the strong incoming local signal would mix with or modulate whatever other incoming signal was being tuned in. This so-called *cross-modulation interference* effect was so objectionable that the idea of an untuned antenna system was dropped completely. Incidentally, cross-modulation is still a problem in radio receiver design.

► Engineers reasoned that if the r.f. section could be designed with plenty of gain, exact tuning in the antenna circuit would not be necessary and single-dial controls could be used. Tests proved this reasoning to be correct as far as local and near-distant stations were concerned, and the single-dial receiver became a reality.

The circuit of one of the first popular single-dial receivers is shown in Fig. *13*. Notice that it contains a three-stage r.f. amplifier (four ganged variable condensers), a grid-leak-condenser detector and two transformer-coupled audio amplifier stages. The variable inductance, then known as a *variometer*, was coupled to the antenna coil; this variometer could be adjusted to tune the antenna exactly to resonance when a weak distant station was being received, but ordinarily was not

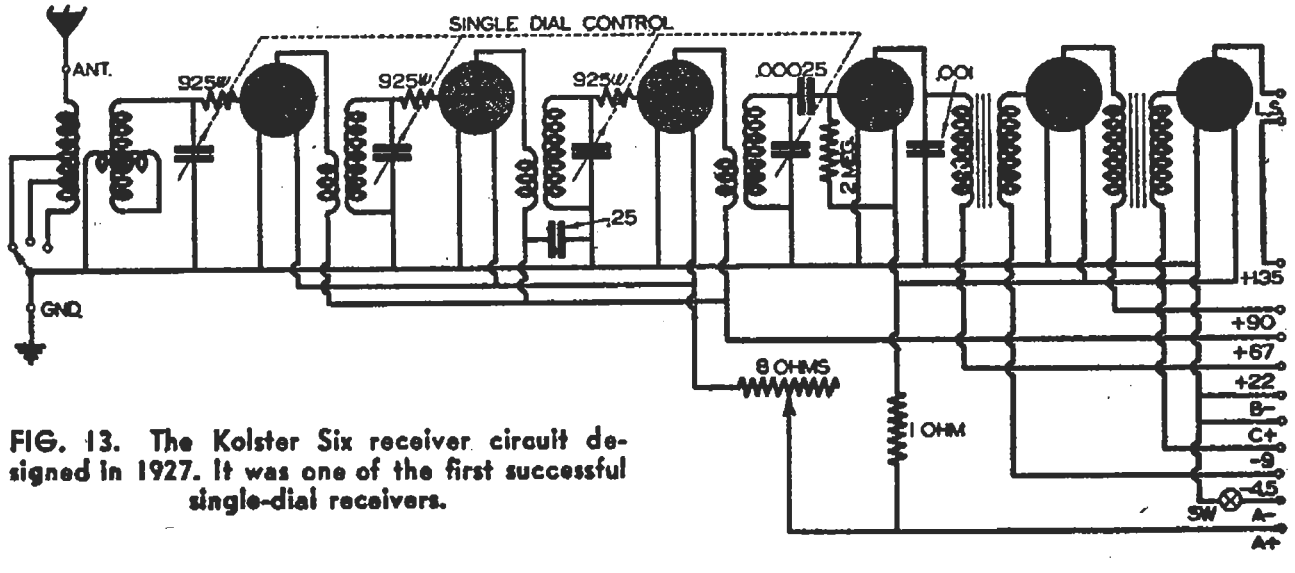

FIG. 13. The Kolster Six receiver circuit designed in 1927. It was one of the first successful single-dial receivers.

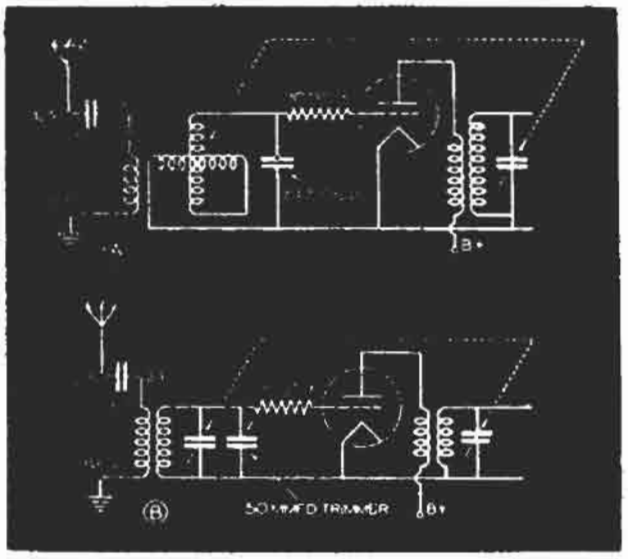

FIG. 14. Two methods of tuning the antenna input circuit to resonance with the other circuits, when tuning in weak distant stations.

needed or used when tuning in local stations. There were several taps on the antenna coil for adjusting the circuit to various lengths of antennas; the tap switch was mounted on the front panel of the receiver. With this tap adjusted for loose coupling (only a few turns in the antenna coil), good reception of high-frequency stations was obtained. With tight coupling (many turns in the antenna coil), good reception at low frequencies was secured.

► After the introduction of this first successful single-dial receiver, many others followed. Some omitted the first variable condenser and the variometer was ganged to the variable condensers in the manner shown in Fig. *14A*. Some omitted the variometer entirely, using one section of the ganged variable condenser to tune the antenna circuit broadly, and using a trimmer or small variable condenser in parallel to permit accurate adjustment when receiving weak distant stations, as shown in Fig. *14B*. At this stage in development, almost all receivers were tuned in exactly the same manner; strong stations were tuned in with the single tuning dial, while weak stations were first tuned in with this dial and then the antenna circuit was adjusted for maximum output by means of the antenna vernier trimmer.

A, B AND C BATTERY ELIMINATORS

All early radio receivers up to the single-dial control sets obtained power

Courtesy U. S. Dept. of Agriculture

An Atwater Kent single-dial battery set with horn loudspeaker. One of the very popular early models, widely sold in both urban and rural areas.

from batteries of one type or another. Dry cells built into convenient blocks of fifteen or thirty cells, with all cells connected in series, were used to supply d.c. voltages to the plates of the tubes. The storage batteries used for filament power had to be removed for recharging at intervals of one to three weeks; many set owners bought their own battery chargers for this purpose. Later, trickle (low rate) chargers were placed on the market for use in homes; these charged the battery at a low rate during periods when the radio receiver was not in use.

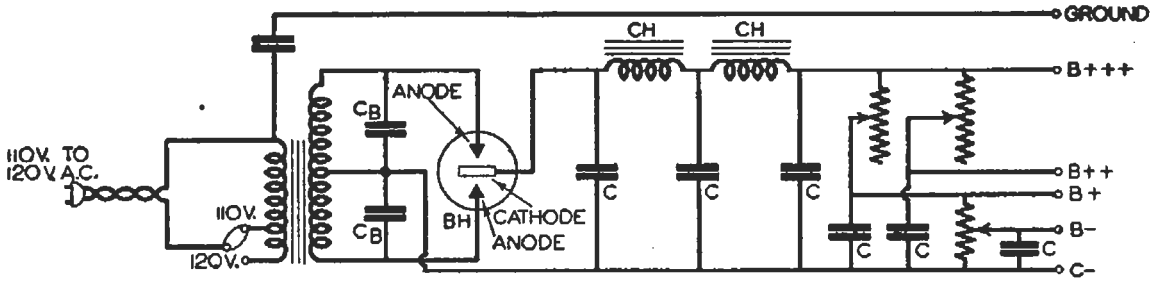

FIG. 15. An early B and C battery eliminator using the Raytheon BH tube as a full-wave rectifier. Paper filter condensers were used at C, while C_B were buffer condensers used to take out some of the noise interference developed in these tubes.

► The average radio receiver of the time required replacement of B batteries at intervals of two or six months, and replacement of C batteries every six to twelve months. This constant replacement of batteries was a decided nuisance, and the radio public in general began calling for the newly-developed battery eliminators.

In 1925 the Raytheon Company of Cambridge, Massachusetts, perfected the cold-cathode gaseous rectifier tube known as the Raytheon BH rectifier; this tube was quickly adopted by receiver manufacturers for use in B and C battery eliminators. A typical combination B and C battery eliminator using this tube is shown in schematic form in Fig. *15*. You will note that it is simply a standard full-wave rectifier circuit except that buffer condensers C_B are connected across the two diode sections of the tube to prevent surges of current produced by the "jerk" tube action from damaging the tube and also to reduce the resulting noise.

B and C battery eliminators met with instant popularity, and the public began calling for A battery eliminators as well. Engineers went to work again, and by using identical electrical principles succeeded in developing a low-voltage, high-current rectifier with a ripple filter which satisfactorily eliminated the filament batteries. Various rectifying devices were used in A battery eliminators; many units were built with a special type A Raytheon cold-cathode rectifier tube or with the Tungar rectifier tubes originally developed for battery chargers, but the copper-oxide rectifier unit and the electrolytic rectifier unit were most widely used for A battery eliminators because of their lower cost and longer life. A typical A battery eliminator circuit

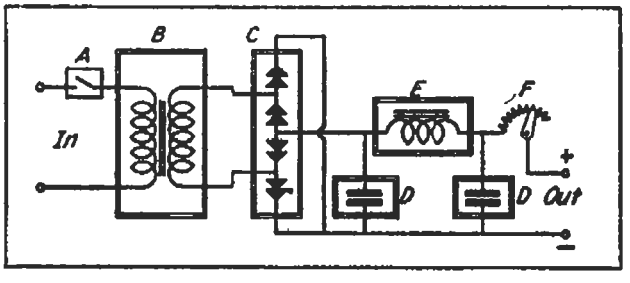

FIG. 16. Circuit of an A battery eliminator using a copper-oxide rectifier unit. B is a step-down transformer, C is a full-wave or bridge type copper-oxide rectifier unit, while D and E comprise a low-voltage, high-current filter. (Condensers D are 2000-mfd., 25-volt electrolytic condensers.) Rheostat F controls the output voltage, while A is the main power switch.

using a copper-oxide rectifier unit is shown in Fig. *16*.

THE A.C. RECEIVER

A person who went into a radio shop late in 1927 or early in 1928 to purchase a radio receiver had to choose five different and separate items (in addition to an antenna) if he desired a complete installation:

1. A radio receiver in its table model cabinet.
2. A loudspeaker.
3. A set of tubes.
4. An ABC power pack.
5. A suitable table on which to place the receiver and loudspeaker, with a shelf underneath for the ABC pack.

Each of these five units was available in a number of different brands, and oftentimes several different models were put out by one manufacturer.

The next step in the evolution of radio receivers was the combining of the ABC eliminator with the receiver itself to give a complete a.c.-operated receiver. At first, the ABC eliminator pack was simply placed inside an enlarged receiver cabinet, which made a somewhat bulky receiver. The attention of design engineers was then directed toward improvement of the power pack.

► As far back as 1925, RCA Manufacturing Company had been building into their receivers special innovations which the rest of the radio manufacturing industry was unable, either because of patent rights or because of high cost, to use. One of these special features was the hot-cathode diode tube used as a half-wave rectifier in the power pack; this tube was capable of furnishing as much as 60 ma. of rectified direct current, making it possible to connect the filaments of the type UV199 tubes in series and feed them with power obtained from the regular B and C battery eliminators. RCA was also the first to operate filament type power output tubes directly from a low-voltage a.c. source in commercially built receivers.

► Many schemes for operating receivers from a.c. power lines were being tried at about this time. In 1928 McCullough introduced the first a.c. tube. He reasoned that if the electron-emitting surface could be electrically separated from a source of heat, it would be possible to use alternating current for filament heating purposes without encountering trouble because of a.c. in the amplifying and detecting circuits. He designed the cathode as a metal sleeve coated with a good electron-emitting material, inside which was the heater filament, insulated from the sleeve by porcelain or some other insulating material. The McCullough tube, also known as the Kellogg tube (after its manufacturer) had its filament terminals at the top of the tube, with the other electrodes connected to standard tube base prongs.

The McCullough tube worked well as an a.f. amplifier, an r.f. amplifier or as a detector. Shortly afterwards McCullough introduced a power amplifier tube. (The principle of separating cathodes and filaments to permit a.c. operation of tubes is still in use today, although, of course, many refinements in tube construction have been introduced since these first a.c. tubes.) For B and C eliminators, most set manufacturers used the popular BH cold-cathode rectifier tubes.

► In 1928 RCA introduced their famous Radiola 17, an a.c.-operated receiver. At the same time they made available for general use three special a.c. tubes; the type 26 tube, having a filament which heated and cooled slowly and could, therefore, be operated from a low-voltage a.c. source when used in r.f. or a.f. amplifier stages; the type 27 heater type tube, having a separate cathode and designed primar-

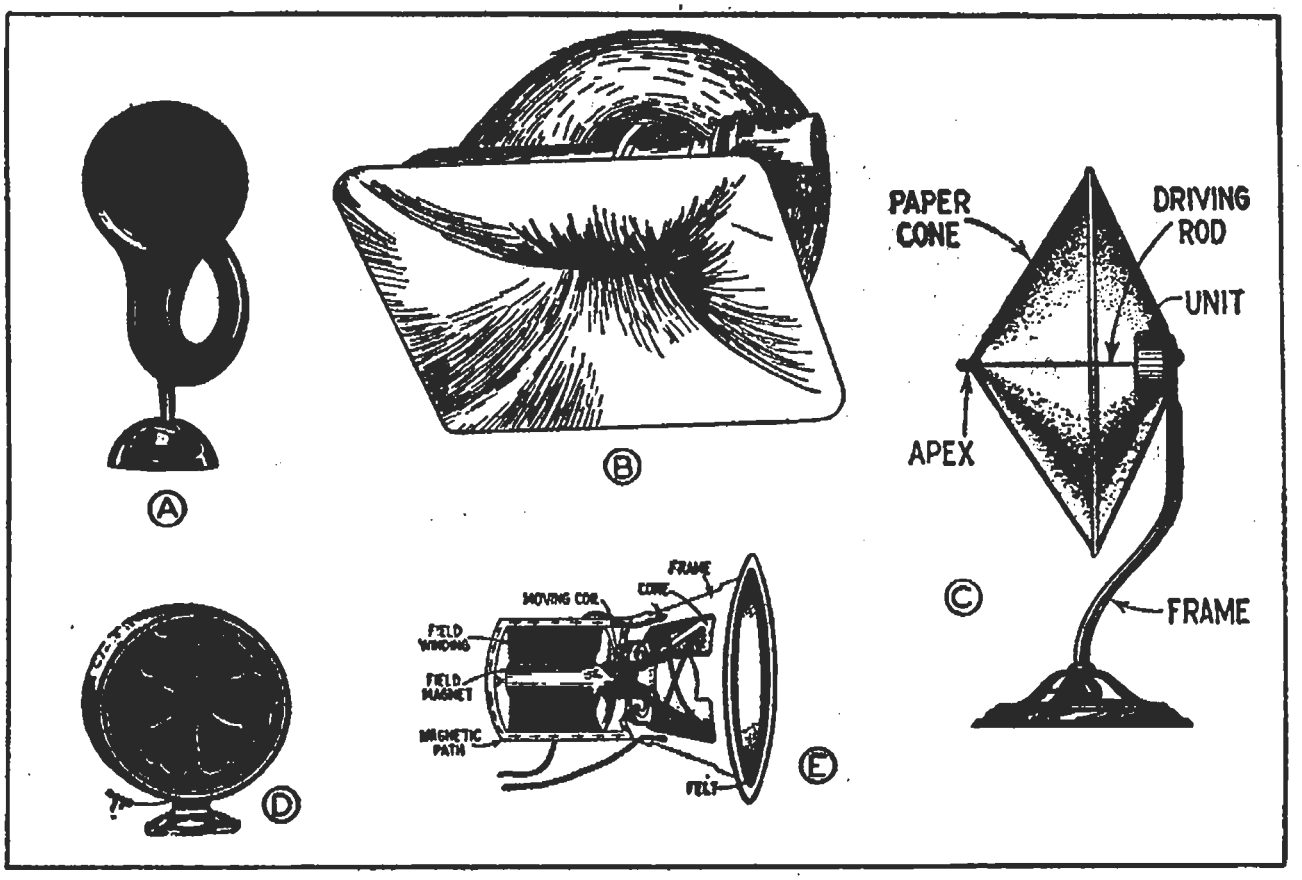

FIG. 17. Early forms of the horn, cone and dynamic loudspeakers.

ily for detector stages; the type 80 full-wave hot-cathode rectifier tube. The types 12 and 71 power tubes, originally designed for battery receivers, were found suitable for a.c. operation in the power audio stage. The year 1928 marked the general introduction of a.c.-operated receivers.

DYNAMIC LOUDSPEAKERS

In the early days of radio, loudspeakers were made and sold independently of receivers, even after the introduction of a.c.-operated receivers. The early horn type loudspeaker, shown in Fig. *17A*, used a single headphone as a driving unit; greatly improved units, with balanced magnetic driving unit and long exponential (curved) horns like that in Fig. *17B*, soon appeared and met with widespread acceptance. Next came the cone type loudspeaker, a paper cone driven by a balanced magnetic unit at its apex or peak. The first cone loudspeaker was made up of two paper cones cemented together at their rims, with the driving unit inside, mounted at the apex of one cone and driving the apex of the other cone as shown in Fig. *17C*.

Single-cone loudspeakers came next, with the edges of the cone attached to a fixed mounting ring by a soft leather washer. The driving unit was mounted inside, and was linked to the apex of the cone. Cone loudspeakers were made in various sizes ranging from 8 to 36 inches in diameter, with the large sizes naturally giving excellent bass response. Some were placed in metal housings similar to that shown in Fig. *17D*.

► In 1925, Rice and Kellogg of the General Electric Company presented a technical paper describing their dynamic loudspeaker, a unit using a moving coil to drive a paper cone, the edges of which were clamped to a fixed rim; details of this loudspeaker appear in Fig. *17E*. The edges of this cone were

made of soft, flexible leather, permitting the entire cone to move. These men also brought out the importance of the baffle in securing good low-frequency response.

In 1925, RCA Manufacturing Company used this first dynamic loudspeaker with one of their superhetrodyne receivers, an a.c. set using the old UV199 tubes (with filaments in series, getting power from a diode rectifier) and two type 210 power tubes connected in push-pull for the output stage. Because of patent difficulties, however, other manufacturers were unable to take advantage of these new developments.

THE RADIO RECEIVER PATENT SITUATION

To describe things mildly, the radio manufacturing industry prior to 1929 was decidedly "in a mess." Large-scale production of receivers was risky, for the important radio patents were in many different hands and there was always the possibility of lawsuits for infringement of patent rights. Rather than give away all their profits in the form of royalties to patent holders, many manufacturers took the risk of lawsuits, knowing full well that a patent showdown would come very soon.

The Radio Corporation of America, formed during World War I at the suggestion of the United States Government in order to centralize radio facilities, had grown by leaps and bounds after the birth of radio broadcasting. This organization acquired the basic patents of the old American Marconi Company, together with American Telephone and Telegraph, Westinghouse and General Electric radio patents, the patents of other companies which it absorbed from time to time, patents obtained through outright purchase or through exchange with other radio manufacturers, and patents resulting from research in RCA laboratories. This organization was thus in a position to produce radio receivers and equipment without fear of serious litigation; it controlled the basic regeneration, t.r.f., superheterodyne, a.c. power pack, dynamic loudspeaker, vacuum tube, and vacuum tube circuit patents.

Realizing that order had to come from the existing chaos if the radio industry was to prosper, RCA proceeded to license reputable manufacturers. These then could, by combining their own patents with those of RCA and other patent-holding companies to whom they were paying license fees, manufacture radio receivers with reasonable freedom from lawsuits.

Manufacturers thus joined together, so today all reputable receiver manufacturers, both large and small, operate under a common patent agreement.

Radio Comes of Age

With patent problems at last out of the way, the radio industry definitely entered the "big business" class. Receiving circuits had been developed up to the point where the demands of the public were pretty nearly satisfied for a time, and manufacturers now turned their attention to cabinets which would improve the appearance of their product.

Before 1929, a few radio manufacturers had recognized the desire of the public for a single cabinet which would house a receiver with all associated ap-

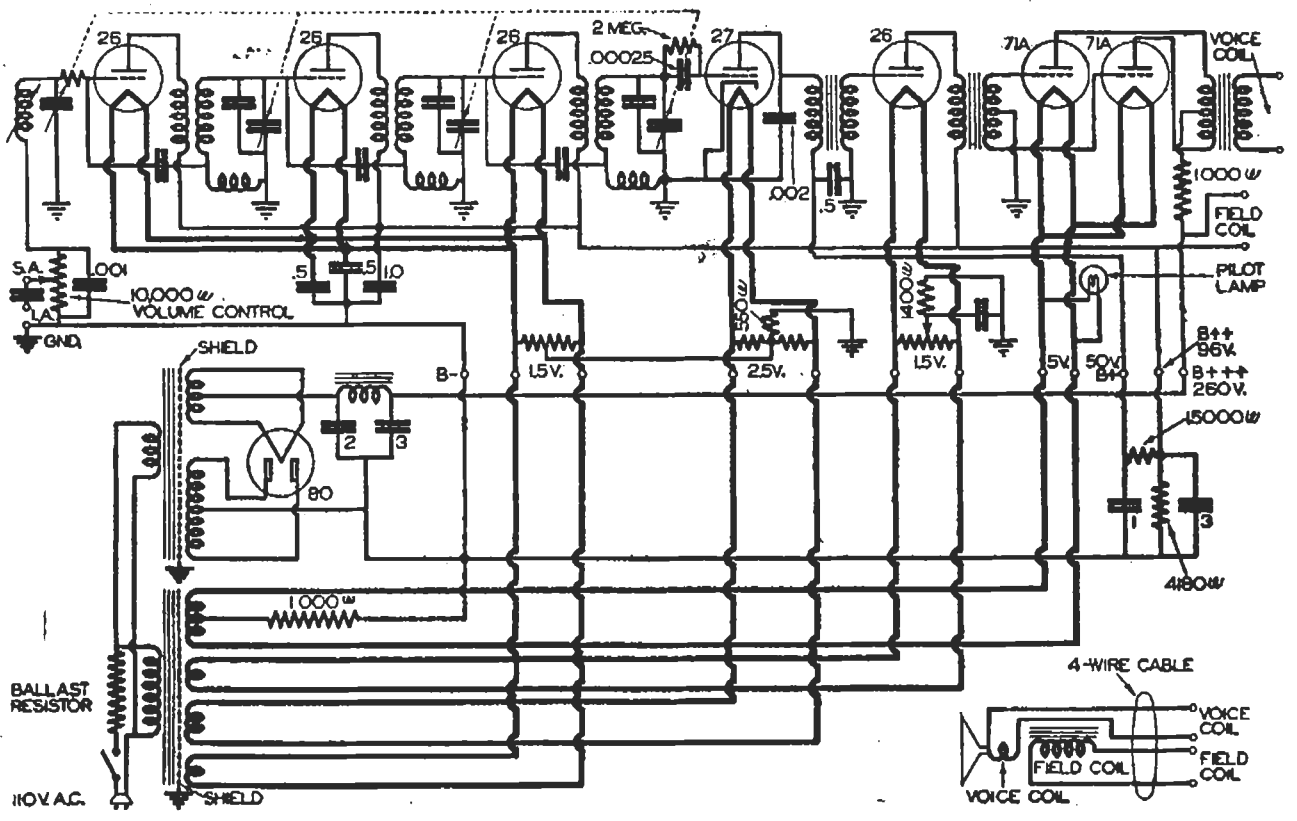

FIG. 18. Circuit of the Majestic Model 70B receiver, the hit of the 1929 radio season.

paratus. For some time, large furniture manufacturers had been producing adaptations of lowboy and highboy console cabinets with provisions for housing the radio chassis, the loudspeaker, and the ABC eliminator.

The production of complete radio receivers in several styles of console cabinets by the Grigsby-Grunow Company,* incorporating all of the desirable technical features then available, was the outstanding event of the 1929 radio season. The Majestic line met with instant popularity, and many of these early console types of cabinet receivers are still in use today. The circuit of this Majestic receiver, shown in Fig. *18,* is of special interest in connection with our studies of how practical requirements changed receiver circuits. You will observe that there are three t.r.f. amplifier stages (with four tuned circuits), a grid-leak-condenser detector, an a.f. voltage amplifier stage, a push-pull audio output stage and a dynamic loudspeaker which received its field current from the power pack unit.

The Majestic receiver was entirely a.c.-operated, with type 26 tubes in each r.f. and a.f. voltage amplifier stage. It had a single tuning dial, with an additional control for tuning the antenna circuit exactly to resonance (by adjusting the inductance of the input coil) when receiving distant stations. A variable resistor which served as volume control coupled the antenna to the receiver input circuit. Each r.f. amplifier stage was neutralized. A very satisfactory sound output was obtained from the dynamic loudspeaker. An outstanding characteristic of this Majestic receiver was its excessive amplification of low notes; this false bass reproduction was pleasing to the public, and because of it, many radio listeners even today insist that the old Majestic was "king of them all."

► During the years of 1929, 1930, and 1931, the t.r.f. receiver with four or

*Manufacturers of "Majestic" radio receivers.

even five tuned circuits reigned supreme. The public learned to rate the selectivity and sensitivity of a radio receiver in terms of the number of sections in the variable condenser gang. For a radio receiver to sell well during these years, it had to be a.c.-operated, have a dynamic loudspeaker, be housed in a suitable console cabinet, have single-dial operation, have an illuminated tuning dial, and have a push-pull audio output stage.

NEW TUBES

At about this time, radio engineers developed standards for selectivity, sensitivity, fidelity, and power output (with negligible distortion) for radio receivers. A host of new radio receiving tubes resulted from the many important technical advances which were made.

It was found that the type 26 tube gave entirely too much hum when used in the a.f. stages. The type 27 tube was improved so it could be used in amplifier stages, thus eliminating this trouble.

Greater and greater power output was being demanded by the public. Some manufacturers used the older type 10 high-voltage power amplifier tube, while others turned to the new type 50 output tube, but these high-power output tubes were in general reserved for the higher-priced receivers. Type 81 half-wave diode rectifiers used in either half-wave or full-wave rectifying circuits were generally found in the power packs of these receivers. To meet the public demand for low-priced receivers, manufacturers used the type 45 power output tubes in push-pull with about 250 volts on the plates, thereby securing as much power output as either a single 10 or 50 tube would give at 450 volts.

► The use of three and four stages of t.r.f. amplification, coupled with the

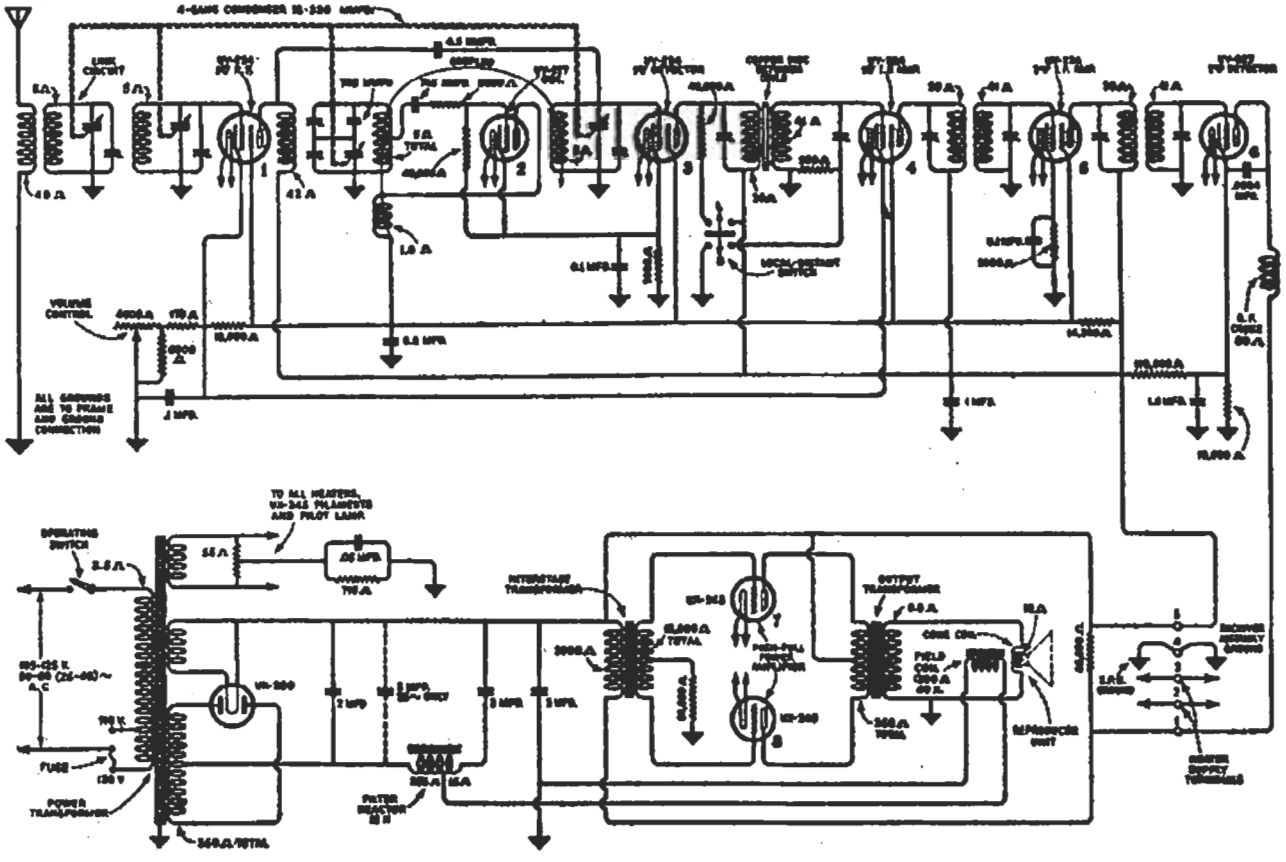

FIG. 19. Circuit of the Radiola 80, a nine-tube superheterodyne announced in 1931 by RCA Manufacturing Co., Inc. This same circuit was also used in the Graybar 700, General Electric 31 and Westinghouse WR5 receivers.

increased power of broadcast transmitters, made the sensitivity of the square law grid-leak-condenser detector unnecessary. Designers turned to the linear C bias detector to secure less distortion in the detector stage and increase the gain and selectivity of the last t.r.f. stage. About 1930, tube manufacturers introduced the type 24 screen grid tube, primarily for r.f. amplification purposes; this gave far more amplification than a triode and made the old neutrodyne circuit obsolete.

With increased r.f. gain in receivers, it became possible to couple the antenna loosely and inductively to the first tuned circuit and secure true single-dial operation without any antenna trimmers. The well-designed receiver of 1930 consequently contained three stages of t.r.f. using screen grid tubes, a linear type 27 or type 24 detector tube, and a push-pull type 45 output stage preceded in some cases by an a.f. voltage amplifier stage. By this time the dynamic loudspeaker was considered an essential part of any receiver. The power pack used a full-wave type 80 rectifier tube. Volume control was commonly obtained by varying the C bias on the r.f. amplifier tubes.

THE RISE OF THE SUPERHETERODYNE

The difficulties encountered in amplifying radio frequency signals above 200 kc. had long been recognized by radio engineers, particularly Armstrong, who had already contributed to the development of regenerative and super-regenerative receivers. The heterodyne method of reducing the frequency of the r.f. carrier practically suggested itself as a solution to this problem, and thus was born the superheterodyne principle of r.f. amplification, near the close of World War I. Armstrong obtained phenomenal gain with intermediate frequencies of 30 to 45 kc. His superheterodyne patents were acquired by RCA, and about 1923 they produced the Radiola Super Heterodyne receiver, in which a 45-kc. i.f. section employing iron-core transformers and a sharp filter was used. RCA claimed the superheterodyne circuit for its own, and continued to develop it to a high state of efficiency. A number of radio parts manufacturers produced i.f. transformers and special preselector and oscillator coils for home experimenters, and home-made superheterodynes thus were the only other source of these receivers.

Late in 1930, the superheterodyne patents were released by RCA for use among their patent licensees, and t.r.f. circuits faded out of the picture, slowly at first and then with a sudden sweep as the superheterodyne circuit climbed to its throne as king of receiver circuits.

► In 1931, the RCA Manufacturing Company brought out the Radiola 80, a receiver which set a standard of performance that even today is difficult to exceed. The circuit diagram for this famous receiver is given in Fig. *19*. Note that the two i.f. amplifier stages had screen grid tubes. The oscillator and second detector used triode tubes, with the latter serving as a linear power detector and feeding two type 45 tubes in a push-pull audio power output amplifier circuit. The first detector was preceded by one stage of tuned r.f. amplification, with a double resonant circuit serving as antenna coupler, to prevent interference troubles. All of the features necessary for good selectivity, high sensitivity, good fidelity, interference suppression, and high power output, are present in this circuit; its development over a period of years was an indication that receiver designers were giving attention to what the public wanted.

MORE NEW TUBES

The inability of the C bias type of volume control to reduce the gain for strong signals without distorting them resulted (in 1932) in the introduction of the type 35 and type 51 variable mu tubes. These tubes had long E_g-I_p characteristic curves, so that very high negative C bias voltages were required to reduce the plate current to zero. Cross-modulation and modulation distortion effects were reduced by these tubes.

► The inability of screen grid tubes, even those of the variable mu type, to handle wide variations in plate voltage without secondary emission troubles practically forced the pentode r.f. amplifier tube into existence. In 1932 a new series of amplifying tubes, consisting of the type 56 triode, the type 57 pentode and the type 58 super-control pentode (which had a variable mu characteristic), appeared.

► The type 45 triode power amplifier tube did not have quite enough amplification to operate directly from a triode acting as linear C bias detector, unless special attention was given to the coupling transformer design. The type 47 power amplifier pentode came into existence to meet this deficiency; the 47 tube was used either singly or in push-pull circuits.

► When receivers were designed to be sensitive to weak signals, they invariably had too much gain for powerful local stations. For this reason the average broadcast listener had to tune with one hand on the tuning dial and the other on the volume control in order to prevent blasting when tuning from a weak to a strong signal.

To achieve more nearly ideal single-dial receiver control, automatic volume control was introduced around 1932. The first a.v.c-controlled receivers contained an extra vacuum tube which acted as a C bias detector and produced the variable negative C bias voltage required for control of the r.f. amplifier tubes. The result was automatic reduction in gain when strong signals were tuned in, and a certain amount of compensation for fading signals.

► The acceptance of the diode detector for signal demodulation purposes made unnecessary the use of a separate a.v.c tube. The diode detector gave considerably less distortion than the linear C bias detector, was able to handle higher r.f. voltages, and at the same time developed a negative d.c bias voltage for automatic volume control purposes. Diode detectors are now practically universal in the second detector stages of superheterodynes. The lower a.f. output of the diode detector required the use of an audio voltage amplifier. Rather than use an extra tube, two diodes and a triode were built into a single envelope, known as the type 55 duo-diode triode; here one di-

Courtesy Stewart Warner

A large table model set, really a full-sized set in a table-type cabinet.

ode section served as second detector and the other supplied the a.v.c. voltage.

MIDGET, AUTO AND FARM RADIO RECEIVERS

Midget Receivers. The year 1929 was the beginning of a period of business depression. Radio, being a new industry and a home substitute for more costly entertainment, kept right on going through the first years of the depression. By 1932, however, the greatly decreased income of the buying public began to make inroads on the volume of sales of high-priced radio receivers. Manufacturers decided that low-priced receivers were their only salvation.

The first midget receiver to attract widespread attention was the Jackson-Bell table model receiver, introduced about 1931. This first midget receiver was a t.r.f. set using screen grid r.f. amplifier tubes followed by a screen grid detector and a type 45 power amplifier. The power pack used a type 80 full-wave rectifier tube.

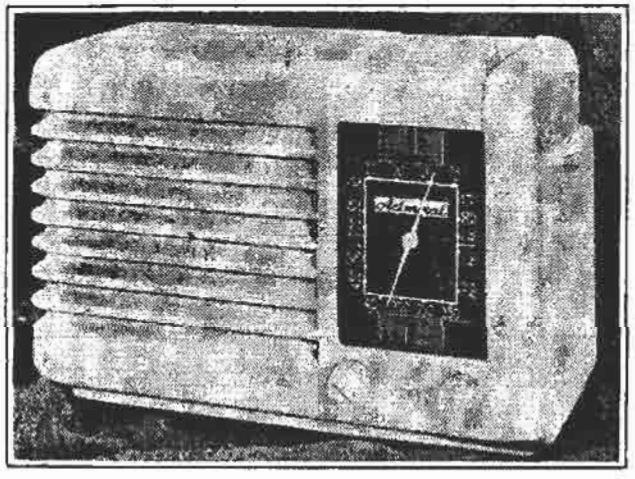

Courtesy Admiral

A modern type midget set.

Then came a flood of midget receivers, together with new tubes designed especially for them. In 1932, midget superheterodyne receivers were introduced. They invariably used the type 24 tube as a combination first oscillator-mixer-detector, so a single tube performed the entire frequency converter function.

Large manufacturers of radio sets began turning out both t.r.f. and superheterodyne table model receivers in various sizes ranging from the "overcoat pocket" and "cigar box" sets to large-size table model receivers, all complete including loudspeaker, and some even having built-in antennas. Midget receivers, limited in both space and cost, resulted in two innovations —the use of multi-function tubes (particularly pentagrid converter tubes), and universal a.c.-d.c. operation (eliminating the need for a power transformer and permitting use of the receiver in either d.c. or a.c. localities). Midget receivers are available now in a wide variety of styles, sizes, and even colors.

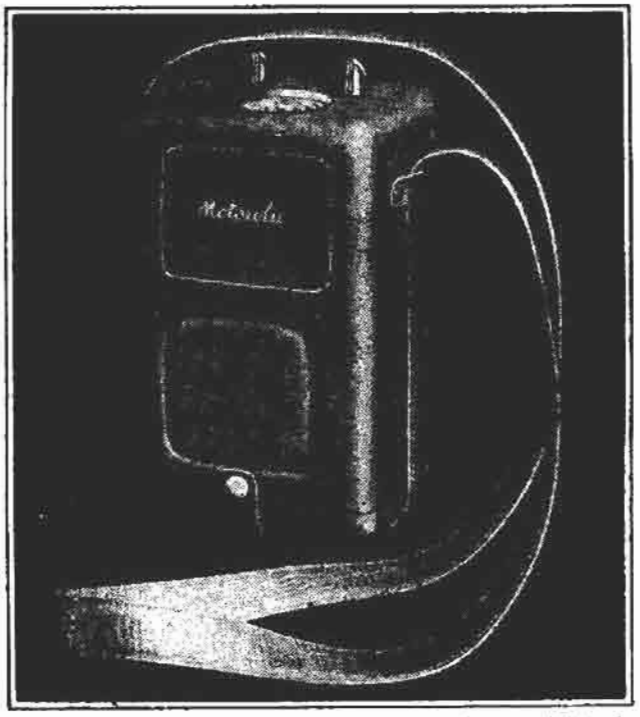

Courtesy Motorola

A true portable, carried by the strap which goes over the shoulder. Special small-sized batteries and tiny radio parts make such receivers possible.

Auto Radios. Mobile (movable) radio equipment was by no means new, for it was being used extensively by the War and Navy Departments, as well

as in airplanes. As far back as 1922, experimenters had been installing radio receivers in automobiles, but it was not until 1932 that radio manufacturers gave any considerable amount of attention to the auto radio receiver. Mass production technique was applied to the auto radio problem as another attempt to bridge the summertime drop in radio sales.

The first auto radios to appear on the general market included a radio chassis in a steel box, a remote tuning and volume control unit, either B batteries or a dynamotor for supplying the required high d.c. voltages, a separate loudspeaker, and suppressor resistors and condensers for the electrical system of the car to suppress ignition interference. The tube filaments (and the dynamotor) obtained power from the 6-volt auto storage battery.

It is interesting to note that auto radios went through the same development process as had home radios some years before. In each case the many separate units were gradually combined into one compact unit. The auto radio loudspeaker became an integral part of the radio chassis. The dynamotor was gradually replaced by the vibrator type of B supply unit, which also was built into the chassis. The superheterodyne became the standard auto radio circuit, and a.v.c. was introduced to compensate for fading. An entire auto radio set could now be bolted to the bulkhead or just behind the dash. Tuning controls which harmonized with the dash panel design of various car models were made available about 1935.

► Research work on auto radios naturally resulted in considerable benefit to radio receivers in general; perhaps the most outstanding contribution was the 6.3-volt line of vacuum tubes. The filaments in an auto radio receiver get their power from the 6-volt car storage battery, the voltage of which may vary from 5 to 7.5 volts under ordinary driving conditions. This wide fluctuation in voltage made it impractical to use the existing 5-volt or 2.5-volt filament tubes, for these required accurate control of filament voltage. The new series of 6.3-volt heater type tubes could be connected directly to the storage battery. They were built to withstand the strain of voltage variations and yet each drew only about .3 ampere of filament current.

► Builders of universal a.c.-d.c. receivers tried using these 6.3-volt tubes, with the filaments connected in series,

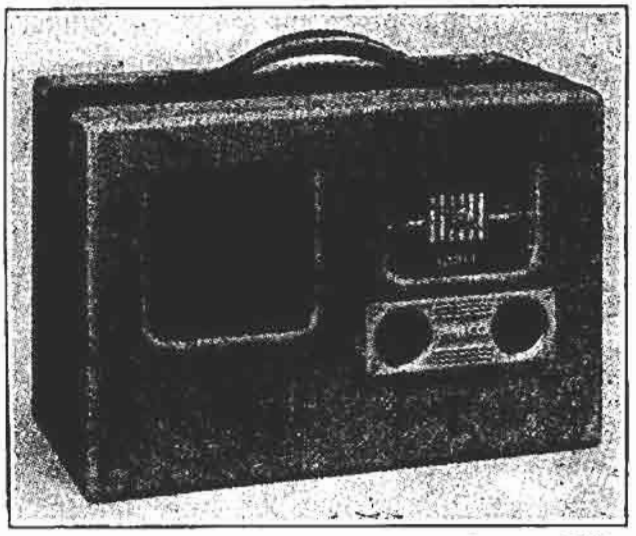

Courtesy Philco

A modern three-way receiver, portable type, which will operate from a.c. or d.c. power lines or from self-contained batteries. Modern, highly efficient battery type tubes make these sets possible.

and obtained quite satisfactory results. A new group of tubes, drawing the same filament current as the 6.3-volt line but using higher filament voltages, now made its appearance; this group included the type 43 power output tube (with a 25-volt filament), together with the 12Z3 (12.5-volt filament) and 25Z5 (25-volt filament) rectifier tubes, designed specifically for use in midget receivers where the filaments of all tubes were connected in series.

Farm Radios. Throughout the phenomenal rise of radio receivers, the at-

tention of manufacturers had been focused on receivers designed primarily for either a.c. or d.c. power lines. Homes without electric power, particularly farm homes, were still struggling along with the old battery receivers like those shown in Figs. *8* and *9*, purchasing new B batteries every few months and recharging storage batteries even oftener. To be sure, a few receivers were made with the low-drain type UV199 and UV120 tubes, but these tubes were entirely too fragile to meet with widespread acceptance.

► Late in 1930, the National Carbon Company introduced their air-cell battery, which could deliver slightly over 2 volts at a current drain of about .65 ampere for at least 1000 hours. When used as filament supply battery on a radio set operated an average of three hours a day, this battery had a useful life of about one year and required no recharging.

The air-cell battery was designed for use with the line of 2-volt tubes announced at about the same time by RCA. These tubes were rugged, small, and easily adapted to existing radio receiver circuits. It now became easy to design efficient battery receivers for farm homes, and the increased demand for these sets resulted in the production of a complete line of modern battery type tubes, far more efficient than early types.

Modern Receiver Types

After 1930, new tubes followed each other in rapid succession. In general these were produced either to satisfy a demand for tubes with special characteristics or to meet special power supply requirements.

With such a wide variety of tubes from which to choose, radio receiver designers now have little difficulty in designing a radio for any given power supply. It is perfectly possible to take a given signal circuit (r.f. amplifier, detector or audio amplifier) and adapt it to any power supply condition simply by rearranging the supply circuit and in some cases changing tubes. An example will show you how this is possible.*

► Consider the superheterodyne circuit shown in Fig. *20*, which is a battery-operated set. It uses a type 1A7 pentagrid converter tube which receives input power from the antenna through a transformer having a tuned secondary; this first tube acts as a combination oscillator and mixer-first detector. It is followed by an i.f. amplifier stage containing two i.f. transformers, after which comes a duplex-diode-triode tube functioning as a diode detector, a.v.c. tube and a.f. voltage amplifier. Then comes a pentode power audio amplifier stage having resistance - capacitance coupling. The supply connections for a battery-operated receiver are shown here, with all supply leads in heavier lines. The filaments of all tubes are connected together in parallel. All B+ leads can be traced to tube electrodes, then through the tubes to the filament circuit and to ground. All of the control grids in the r.f. section can be traced to the diode detector from which they receive a.v.c voltage. The power output tube grid can be traced to the

*Experienced servicemen seldom attempt to change a receiver over from one type of power supply to another, for many problems are encountered. The various circuits are presented here only to illustrate the principles involved.

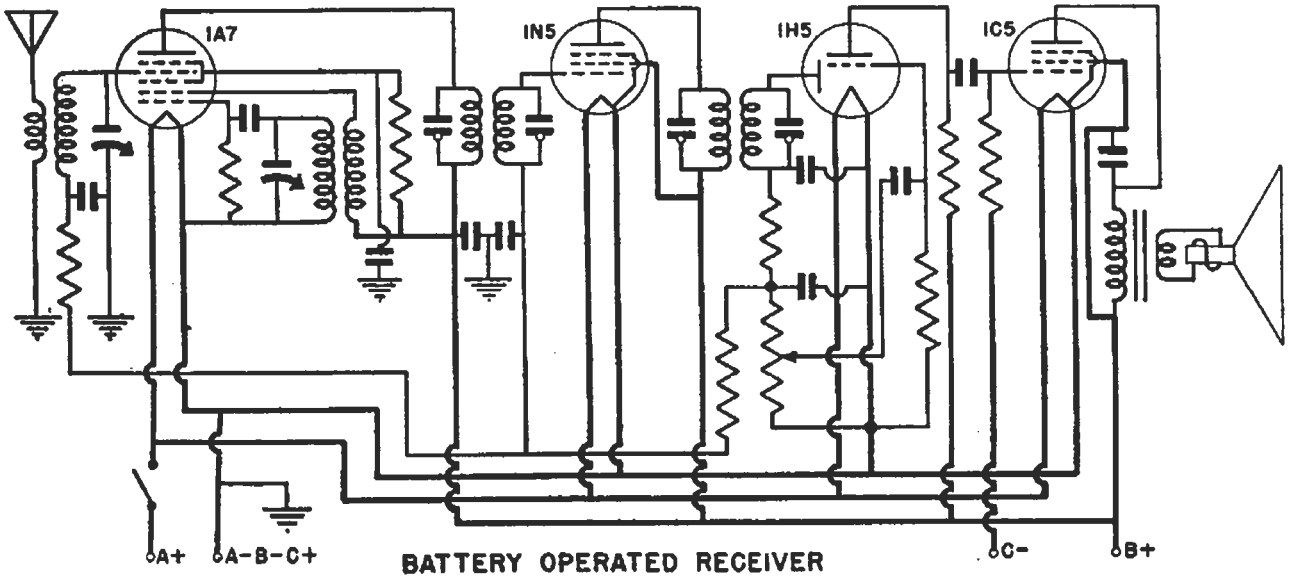

FIG. 20. A standard superheterodyne arranged to operate from batteries.

C— power supply lead. Either a magnetic or a permanent magnet type dynamic loudspeaker is used, so no d.c. power is required by the loudspeaker to produce a steady magnetic field.

► When this same signal circuit is adapted for a.c. operation, it will appear as shown in Fig. *21*. Again the power supply circuit and all power supply leads are shown in heavier lines. Heater type tubes, designed to operate with a.c. filament voltages, have been substituted for the low-drain battery type tubes. The power pack, which can be designed for any a.c. line voltage and frequency, uses a type 5Y3 full-wave rectifier tube. The filaments of all tubes are connected together in parallel and are completely isolated from the signal circuits. When electrode voltages lower than the power pack voltage are required, resistors are used in the power supply leads to drop the voltage.

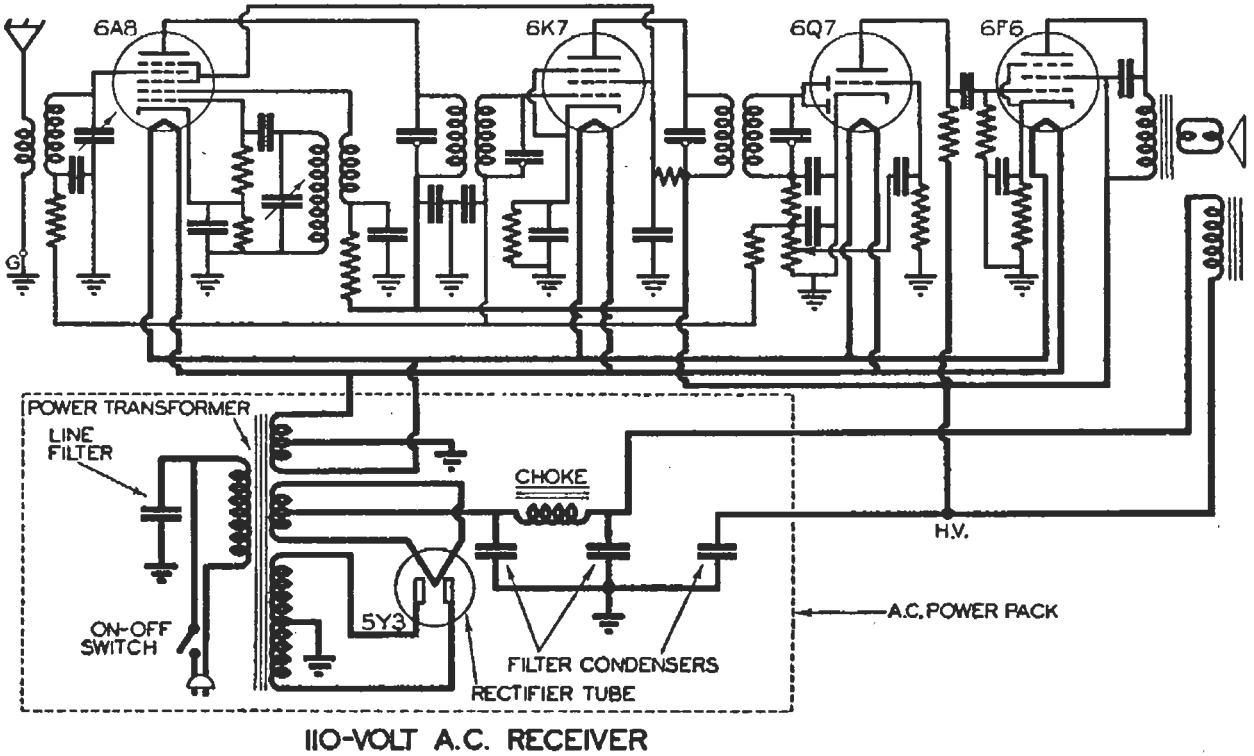

FIG. 21. The same basic circuit as in Fig. 20, arranged for operation from 110-volt a.c. power.

All of the *control* grids in this circuit can be traced to ground through resistors either directly or through the a.v.c. tube circuit. Other grid electrodes and all plate electrodes can be traced to the point marked H.V., which is the highest completely filtered d.c. voltage in the receiver. An electromagnetic type dynamic loudspeaker is used, with the field coil acting as a choke in the power supply filter.

► When this same signal circuit is used for an a.c.-d.c. universal receiver, the circuit takes on the form shown in Fig. *22*. Here a diode rectifier tube is used, feeding into a filter which furnishes the d.c. electrode voltages. Supply leads are again shown in heavy lines; tube filaments are all connected together in series and are independently connected to the line voltage terminals.

Condenser C_A, in series with the antenna, allows r.f. current to flow but blocks d.c. and has a high reactance at power line frequencies. It prevents damaging the antenna coil primary in the event that the antenna is accidentally grounded at a time when the chassis is connected to the "hot" side of the power line. No ground is used with this receiver. All other features of this universal receiver are similar to those for battery operation.

► The manner in which this basic receiver signal circuit is adapted for 6-volt operation, such as for automobile and farm radio receivers, is shown in Fig. *23*. The filaments of all tubes are here connected in parallel directly to the 6-volt storage battery. A synchronous vibrator, also connected to the battery, changes the d.c. to a.c., which is then stepped up by the power transformer and again converted back to pulsating d.c. by the vibrator. The pulsating d.c. is filtered and then fed to the various tube electrodes except the control grids. All control grids can be traced to ground through the a.v.c. circuit. The chassis is the common return for all supply circuits in this set.

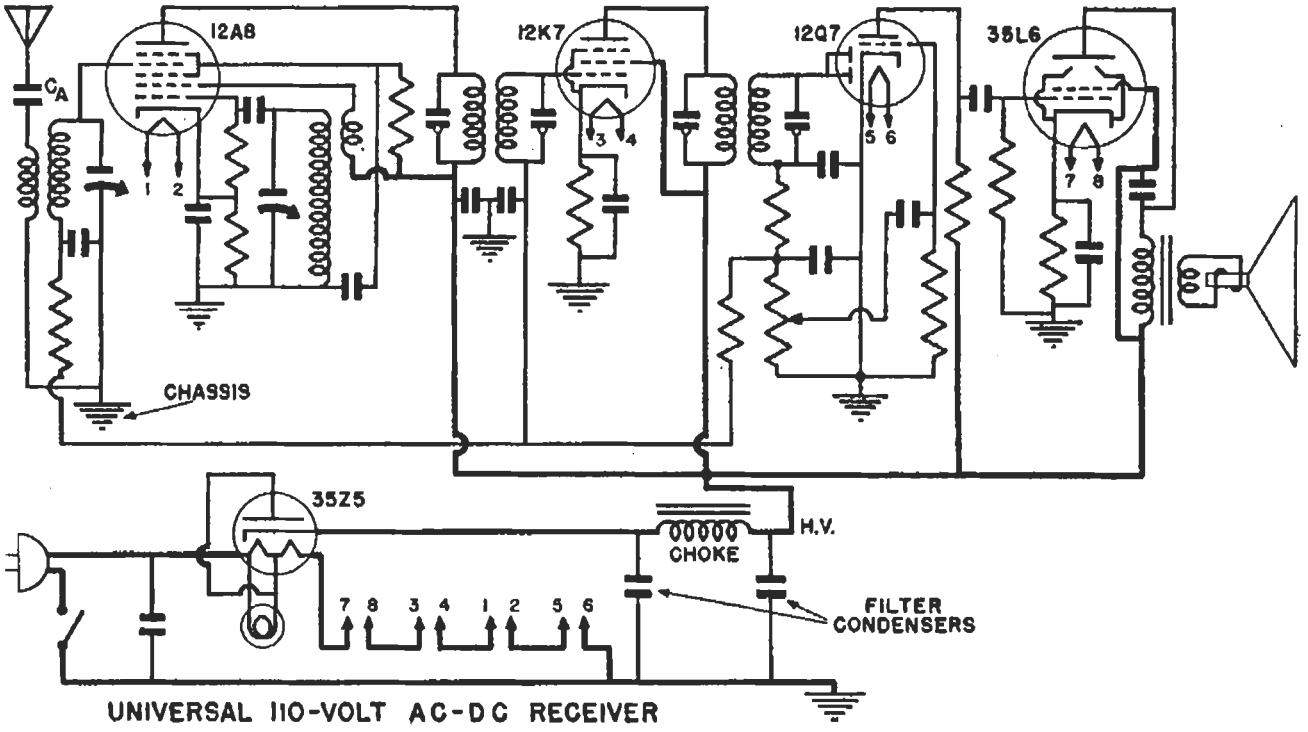

FIG. 22. The standard circuit of Fig. 20 arranged for universal operation from 110-volt a.c. or d.c. power lines.

Reading Circuit Diagrams. The circuits in Figs. *20*, *21*, *22*, and *23* show that with minor signal circuit changes, a standard radio receiver can

be adapted to any power supply. The analysis of these circuits has also made it clear that any circuit diagram can be traced or read in three distinct steps:

1. *Trace the power pack and supply circuit leads* through the signal circuits and tubes.

2. *Trace the signal from the antenna to the loudspeaker* (or image reconstructor in the case of a television receiver).

3. *Trace any special control circuits,* such as a.v.c. tone control, a.f.c., etc.

ALL-WAVE AND HIGH-FIDELITY RECEIVERS

Along with the expansion of radio broadcasting, other radio services on land, at sea and in the air grew to unusually large proportions. Police, aviation, commercial and amateur radio transmitters began crowding the frequency channels above the broadcast band frequencies; furthermore, broadcast stations in many foreign countries were sending out programs on these high frequencies, primarily to reach far distant colonies.

Radio enthusiasts soon learned that many interesting messages and programs could be picked up on the high frequencies (short waves.) About 1930, receiver manufacturers took recognition of the growing public interest in short-wave reception and began the production of short-wave converters. These converters consisted of a mixer-first detector stage which, when connected to an ordinary t.r.f. receiver, used that receiver as the intermediate frequency amplifier, as second detector, a.f. amplifier and loudspeaker. A short-wave converter thus changed the broadcast band t.r.f. receiver into a short-wave superheterodyne receiver.

The addition of a separate unit to a receiver has always been followed by a combination of that unit with the receiver; when the superheterodyne circuit became firmly established as the basic receiver circuit, this combination of broadcast and short-wave receiver units took place. With a superheterodyne, all that was required to make the change was a means of changing the preselector and oscillator coils for each frequency range desired. The i.f. value of all-wave receivers gradually rose from a low value of about 175 kc. to about 460 kc. in order to get away from the interfering signals which are inherent in a beat frequency system.

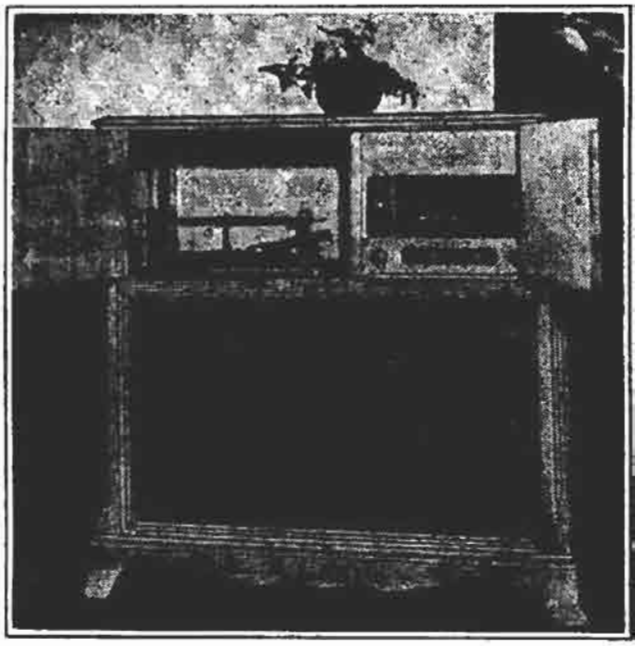

Courtesy General Electric

A modern phono-radio combination receiver.

► The radio listening public has always been divided into two distinct groups, one containing those enthusiasts who prefer DX (long-distance) reception which is reliable and free from interference, and the other group prefering local reception only, but of the highest possible fidelity of reproduction. To be sure, the first group also desired a certain amount of fidelity, and consequently manufacturers had to make some compromise. While design engineers strove to improve selectivity and sensitivity, they attempted at the same time to bring up the fidel-

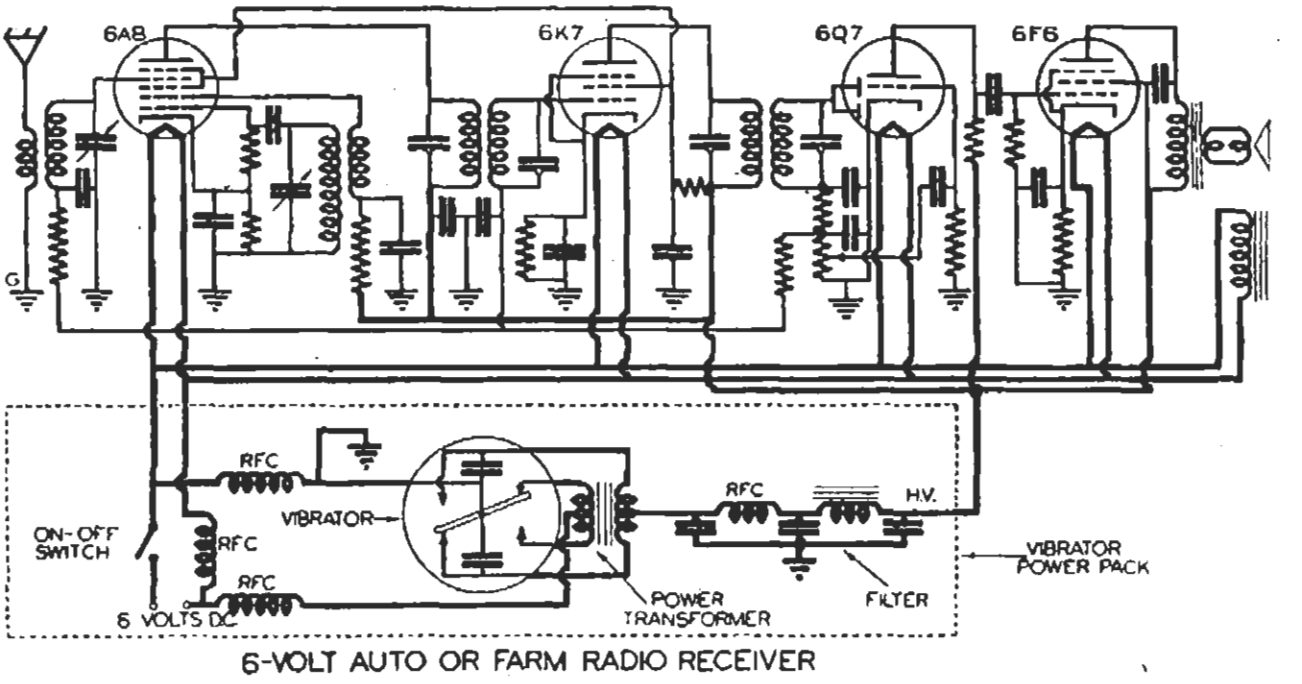

FIG. 23. The standard superheterodyne of Fig. 20 arranged to operate from a 6-volt storage battery.

ity as much as possible and eliminate interference troubles.

The demand for higher and higher fidelity continued, resulting in band-pass r.f. systems and flat-response a.f. amplifiers feeding into a high-fidelity loudspeaker with specially designed chambers or baffles. The problems of improving fidelity are by no means simple, for difficulties with voice, hum and volume range increase rapidly as fidelity is improved. Nevertheless, receivers are today on the market which will faithfully reproduce anything which can be put on the air by modern broadcast transmitters.

► Even though fidelity is all-important with certain listeners, they will not accept receivers which lack certain other desirable features. Therefore, the high-quality receiver of today incorporates a great many outstanding features, such as: high fidelity in the broadcast band; reception on all short-wave bands on which programs are regularly scheduled; compensated volume control; bass and treble control; automatic tuning of the push-button or telephone dial type, and tuning indicators.

TELEVISION

The radio industry, having gone through the code and sound signal development stage, now takes on the transmission of visual signals as well. The methods of modulating, broadcasting, and receiving visual signals do not differ in principle from the methods used for code and sound signals; only the ranges of modulation and carrier frequencies differ.

It is only natural that the well understood and thoroughly tested principles of the superheterodyne circuit should be extended for television service. Because of the high picture frequencies involved, ultra-high-frequency carriers are used. The preselector circuit in a television receiver must therefore tune to ultra-high-frequency carriers; the i.f. amplifier must handle a wide range of side frequencies; the detector circuit must have no frequency distortion, even at the highest pic-

ture frequencies, and the picture amplifier (if used) must likewise have no distortion. Special sweep circuits are needed to control the electron beam in the cathode ray image reconstructor tube.

Thus you can see how the amplitude-modulated radio receiver has passed through various stages of development, starting with the coherer, and moving in rapid succession to the basic circuits of crystal detectors, regenerative vacuum tube detectors, tuned radio frequency amplifiers, and finally to the superheterodyne circuit, which today is king of them all.

F.M. RECEIVERS

Frequency modulation broadcasting is the culmination of years of research and development work by Major E. H. Armstrong and other radio engineers seeking to provide a broadcasting service which is free from interfering noise, free from station interference, and has true high fidelity. These three basic listener requirements are now met more completely than ever before. With f.m., radio reception acquires a breath-taking naturalness, and audio frequencies as high as 15,000 cycles are reproduced faithfully.

F.M. receivers can be divided into three groups: *1*, those designed only for f.m. reception; *2*, those providing both a.m. and f.m. reception; *3*, f.m. converters, which connect to the a.f. input terminals of an a.m. receiver.

Some sections of f.m. receivers employ entirely new circuits, while others simply use basic circuits which are suitably designed to handle all the frequencies encountered in an f.m. system. The a.f. sections and loudspeakers, however, can be the same in both f.m. and a.m. receivers because they handle the same types of signals. An f.m. receiver will usually be designed to give high fidelity, so as to take full advantage of the higher-quality signals put on the air by f.m. transmitters.

Looking Ahead. Modern receivers of the superheterodyne type, television and f.m. receivers are just mentioned here. You are going to study them in detail in later lessons. Also, receiver refinements, such as a.v.c., tone controls, a.f.c., push-button systems, etc., are all to be thoroughly covered in future lessons.

THE N. R. I. COURSE PREPARES YOU TO BECOME A
RADIOTRICIAN (REGISTERED U.S. PATENT OFFICE) & TELETRICIAN (REGISTERED U.S. PATENT OFFICE)

Lesson Questions

Be sure to number your Answer Sheet 18FR-2.

Place your Student Number on *every* Answer Sheet.

Send in your set of answers for this lesson immediately after you finish them, as instructed in the Study Schedule. This will give you the greatest possible benefit from our speedy personal grading service.

1. What seven important technical requirements, demanded by the public, control the circuit chosen for any particular receiver? P 1

2. Who predicted mathematically that an oscillating current will radiate electromagnetic waves which are identical with light waves except for frequency? James Clerk Maxwell

3. Why were loading coils sometimes inserted in the tuning circuits of early receivers? to increase circuit inductance and thus give reception on longer wavelengths

4. Why is the super-regenerative receiver unsatisfactory for use in congested bands? It tuned to broadly

5. Why were grid suppressors used in some of the earlier t.r.f. receivers? To help cure feedback

6. What objectionable effect compelled set designers to drop the idea of untuned antenna systems in single-dial receivers? Cross-modulation interference

7. In what radio apparatus was the Raytheon BH rectifier first used? In the B&C battery eliminators

8. In addition to an antenna, what five separate items did a person have to select in the early part of 1928 in order to have a complete radio receiver installation? P 14.

9. In what year were a.c.-operated receivers generally introduced? 1928

10. Name the three distinct steps involved in tracing or reading a circuit diagram. P 26

Lesson Questions

Be sure to number your Answer Sheet 18FR-2.

Place your Student Number on *every* Answer Sheet.

Send in your set of answers for this lesson immediately after you finish them, as instructed in the Study Schedule. This will give you the greatest possible benefit from our speedy personal grading service.

1. What seven important technical requirements, demanded by the public, control the circuit chosen for any particular receiver?

2. Who predicted mathematically that an oscillating current will radiate electromagnetic waves which are identical with light waves except for frequency?

3. Why were loading coils sometimes inserted in the tuning circuits of early receivers?

4. Why is the super-regenerative receiver unsatisfactory for use in congested bands?

5. Why were grid suppressors used in some of the earlier t.r.f. receivers?

6. What objectionable effect compelled set designers to drop the idea of untuned antenna systems in single-dial receivers?

7. In what radio apparatus was the Raytheon BH rectifier first used?

8. In addition to an antenna, what five separate items did a person have to select in the early part of 1928 in order to have a complete radio receiver installation?

9. In what year were a.c.-operated receivers generally introduced?

10. Name the three distinct steps involved in tracing or reading a circuit diagram.