WORLD BILL ACCEPTOR

WBA-12-SS
WBA-13-SS
WBA-22-SS
WBA-23-SS
WBA-24-SS2
WBA-25-SS2

CHAPTER 1

Model Numbers
Specifications

Date: November, 2003

JCM GLOBAL JAPAN CASHMACHINE CO., LTD.

1. Model Classification

How to read the Model Classification Number

Model Numbers

WBA - * * - SS(2) - * * * (*) - * * * - * *

(1) (2)(3) (4) (5) (6) (7)(8)(9) (10)

(1) WBA Bill Acceptor

(2) Type of acceptor head
1 - 1x head (magnetic sensors enhanced)
2 - 2x head (optical sensors enhanced)

(3) Type of CPU board
0 - Flash ROM (1M)
1 - EPROM (1M)
2 & 4 - Flash ROM (4M)
3 & 5 - EPROM (4M)

(4) Type of Cash Box
SS - SS Down Stacker (80mm width)
SS2 - SS2 Down Stacker (82mm width for Euro banknotes)

(5) Country Code

(6) Denominations to be accepted
(Example) Euro banknotes

Country Code \ Denomination	€5	€10	€20	€50	€100	€200	€500
EUR1	*	*	*				
EUR2	*	*	*	*			
EUR3	*	*	*	*	*		
EUR4	*	*	*	*	*	*	
EUR5	*	*	*	*	*	*	*

(7) Cash Box Capacity
4 - 400 notes
5 - 500 notes (standard)
A - 1,000 notes

(8) Faceplate
0 - without faceplate (standard)
1 - with faceplate

(9) Guide Width
1 - 66mm (Type 1)
2 - 70mm (Type 2)
3 - 76mm (Type 3)
4 - 80mm (Type 4)
5 - 82mm (Type 5)

(10) Interface
01 - ID001: Parallel Interface
02 - ID002: Pulse Interface
03 - ID003: Bidirectional Serial Interface (standard)
44 - ID044/045: Serial & Pulse Interface
0A2 - ID-0A2: Serial & Pulse Selectable Interface

Contact JCM for other I/F.

EXAMPLE

WBA-25-SS2-EUR5-505-03

WBA model bill acceptor for Euro banknotes accepting up to 500 Euro, with 2x head, EPROM, SS2 stacker, 500-note cash box, 82mm width bill guides and ID-003 I/F without faceplate.

2. General Specifications

Accepted Bill Denominations:	Refer to the software specifications of each unit.
Bill insertion:	Refer to the software specifications of each unit.
Acceptance rate:	90% or more (Including the 1st return and 2nd acceptance. The following bills, however, are excluded.) a) Dirty, worn, wet, torn, or extremely wrinkled bills. b) Bill with a folded corner or edge. c) Bill with a noticeable cutting size difference or printing displacement.
Validation Time:	Within 2 seconds (Time until the output of the vend signal.)
Standard Interface:	ID-003 bi-directional serial interface (Photocoupler isolation)
Cash box:	Security (lockable) box Capacity --- Average 500 bills (Coupons)
Note:	The lock shall be installed by a user (the catch is supplied with the unit.)
Escrow:	One bill or one barcode coupon
Power requirements:	DC +12V (+-5%), capacity 2.5A or more
Power consumption:	Standby status --- 2.8VA Operation status --- 14VA (MAX. 24VA)
Environment:	Operating temperature --- 0 °C to 45 °C Storage temperature --- -20 °C to 60 °C Relative humidity --- 30% to 80% No direct sunlight
Outside dimensions:	Refer to the drawing below.
Weight:	Main unit(with cash box)--- Approx. 4.8 Kg Cash box alone --- Approx 1.5 Kg
Installation:	Horizontal and indoor installation

3. Dimensions

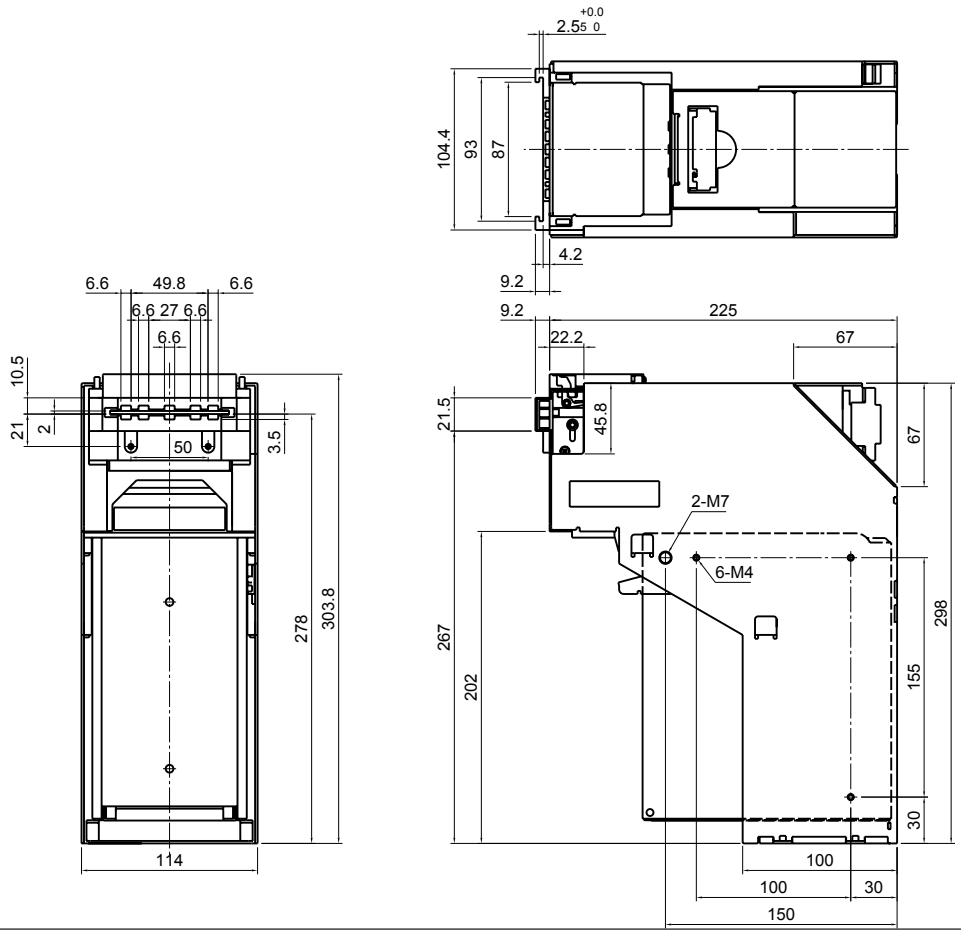

MODEL NUMBERS
SPECIFICATIONS

WORLD BILL ACCEPTOR

WBA-12-SS
WBA-13-SS
WBA-22-SS
WBA-23-SS
WBA-24-SS2
WBA-25-SS2

CHAPTER 2

Operation Manual

Date: August, 2003

JCM GLOBAL JAPAN CASHMACHINE CO., LTD.

Contents

1. Features

The WBA has the following features.

· Able to read a wide range of bill sizes
Four types of bill guides are available for the WBA. Switching the bill guides allows the unit to read bills ranging from 62mm to 82mm wide. The length of bills read are from 125mm to 170mm.

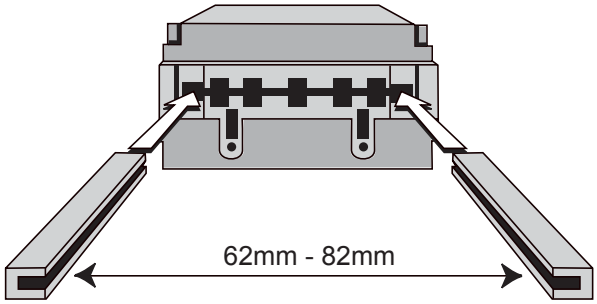

· DIP switch settings to accept/reject bills
Up to 7 denominations are accepted.
Accept / reject of each denomination is Dip-switch selectable.

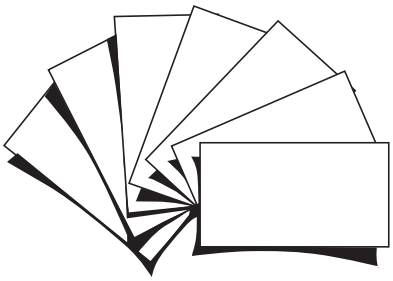

· Easy bill retrieval
The cash box can be detached from the main unit to withdraw deposited bills.
The machine can be equipped with a lock for higher security. Each SS and SS2 cash box stores up to 500 bills.

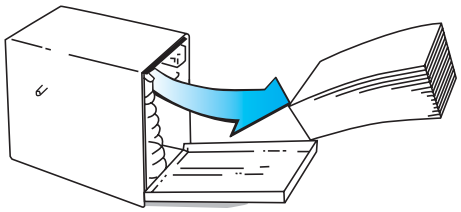

2. Component Names

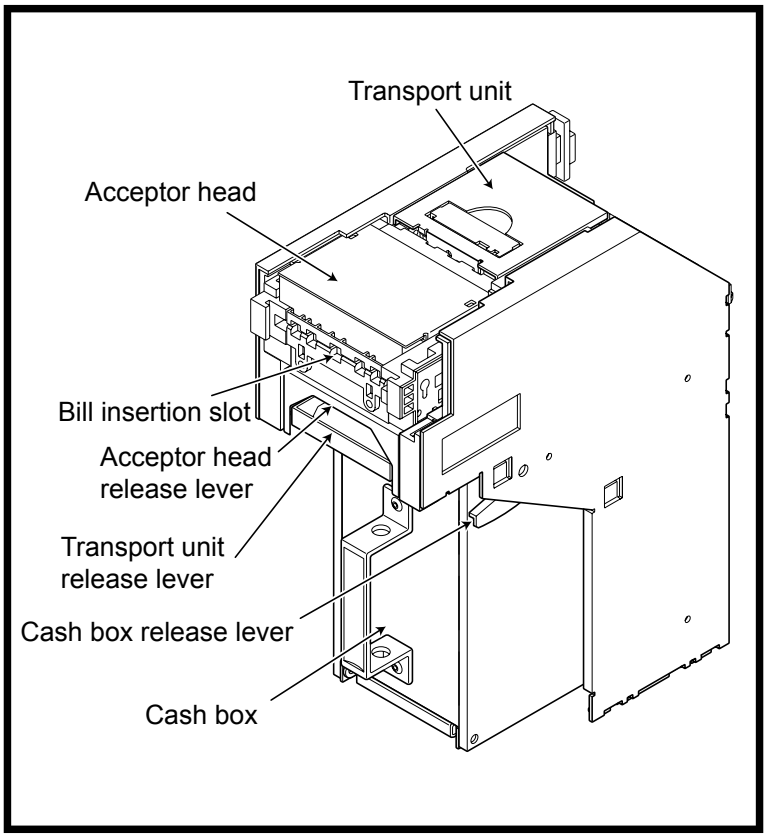

3. Dipswitch Settings

Verify the software in the WBA before installing it. The DIPswitch settings are determined by the software.
See software specifications proivded separately for DIPswitch settings of your software.

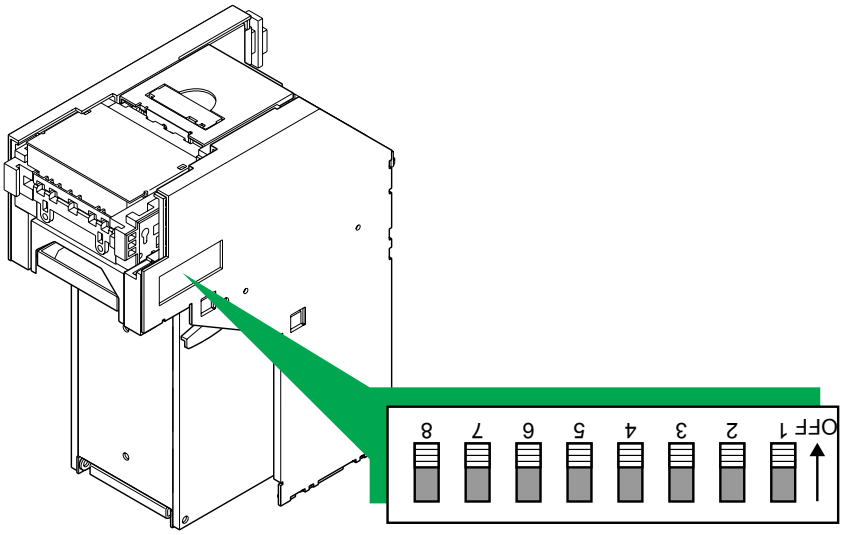

4. Installation

1. Installation

There are three mounting holes on each side
(a total of six mounting holes).

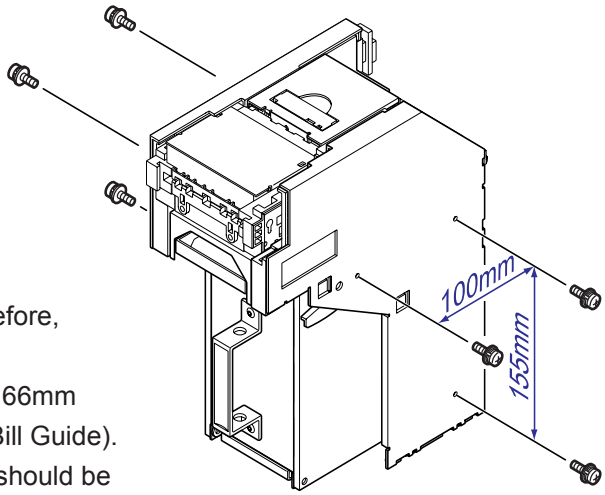

2. Switching the bill guides

Unless your WBA has been used with another software before, correct bill guides should be installed in the acceptor unit .
Each software has designated bill guide types (ex. USA = 66mm width = Type 1 Bill Guide, EUR5 = 82mm width = Type 5 Bill Guide).
Refer to the software specification to find which bill guide should be installed.

To remove the bill guides, first remove the acceptor head from the main unit and then push out the bill guides from the back of the acceptor head with a Phillips-head screwdriver. To install the bill guides, push the guides into the acceptor head slot from the front until you hear a click. Be sure to push the guides in the correct direction.

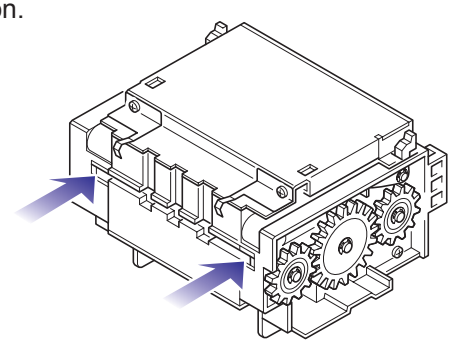

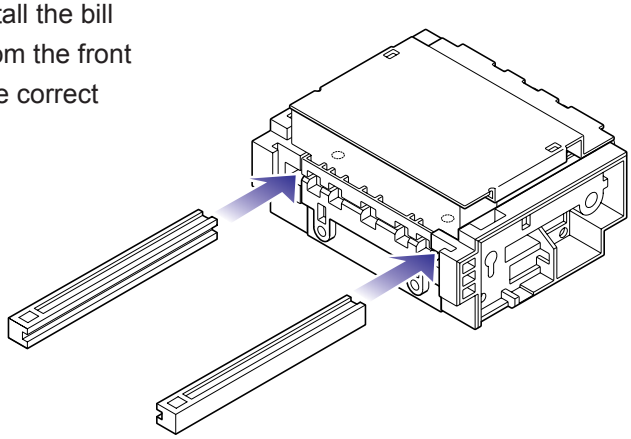

5. Input/Output Circuits

6. Cabling

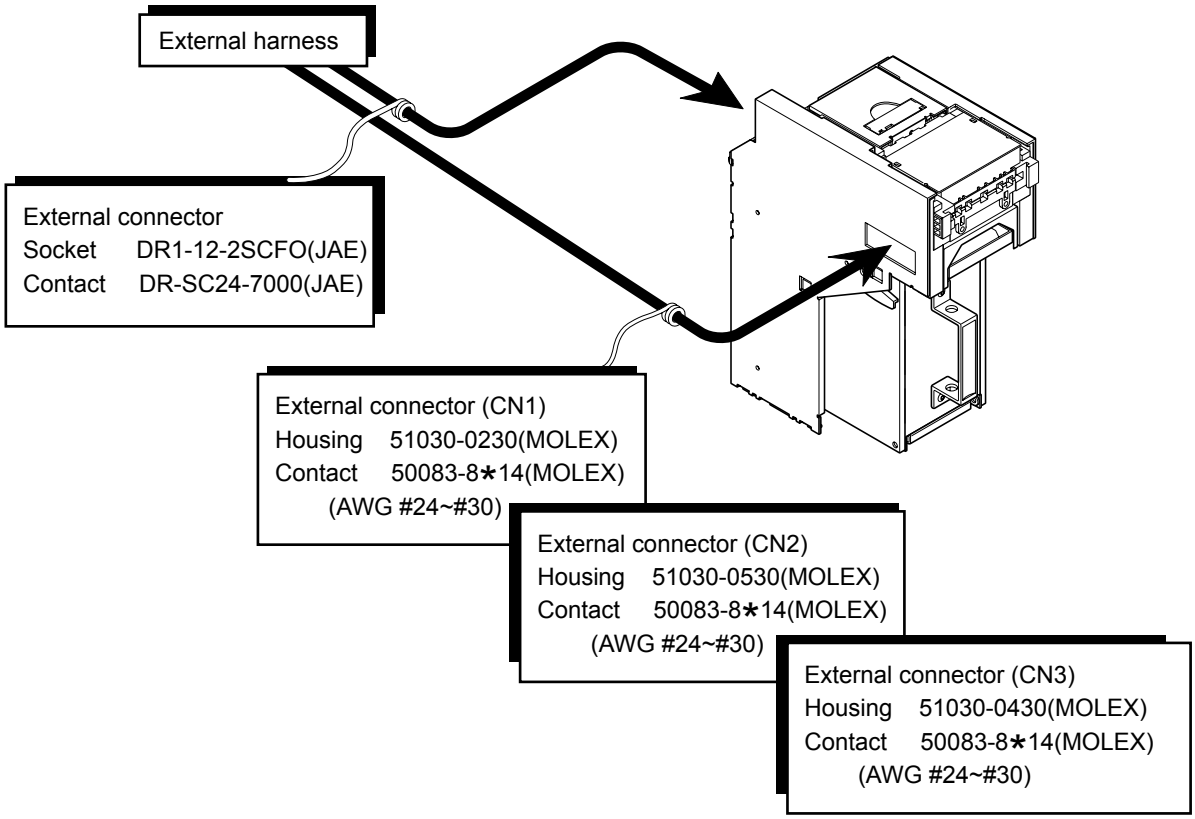

7. Pin Assignment - ID-003 I/F (Standard)

CN 1

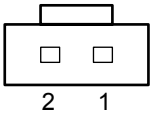

Pin No.	Signal Name	Function
1	+ 12V	DC +12V power supply
2	GND	Ground

CN 2

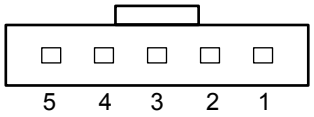

Pin No.	Signal Name	Function
1	M. RES	Acceptor reset signal
2	TXD	Data transmission
3	+ 12V	Interface Power supply (DC+12V)
4	RXD	Data reception
5	GND	Ground

CN 3

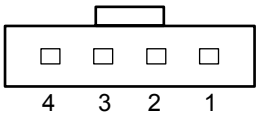

Pin No.	Signal Name	Function
1	LED +	LED drive (anode)
2	LED -	LED drive (cathode)
3	NC	Reserved
4	NC	Reserved

Connector

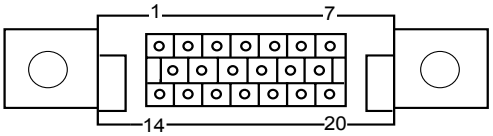

Pin No.	Signal Name	Function
1	+ 12V	DC +12V power supply
2	GND	Ground
3	M. RES	Acceptor reset signal
4	TXD	Data transmission
5	+ 12V	Interface Power supply (DC+12V)
6	RXD	Data reception
7	GND	Ground
8	NC	Do not use this pin
9	NC	Do not use this pin
10	NC	Do not use this pin
11	NC	Do not use this pin
12	NC	Do not use this pin
13	GND	Ground
14	LED +	LED Drive (Anode)
15	NC	Do not use this pin
16	NC	Do not use this pin
17	NC	Do not use this pin
18	LED -	LED Drive (Cathode)
19	NC	Do not use this pin
20	NC	Do not use this pin

8. Operation Flowchart - ID-003 I/F (Standard)

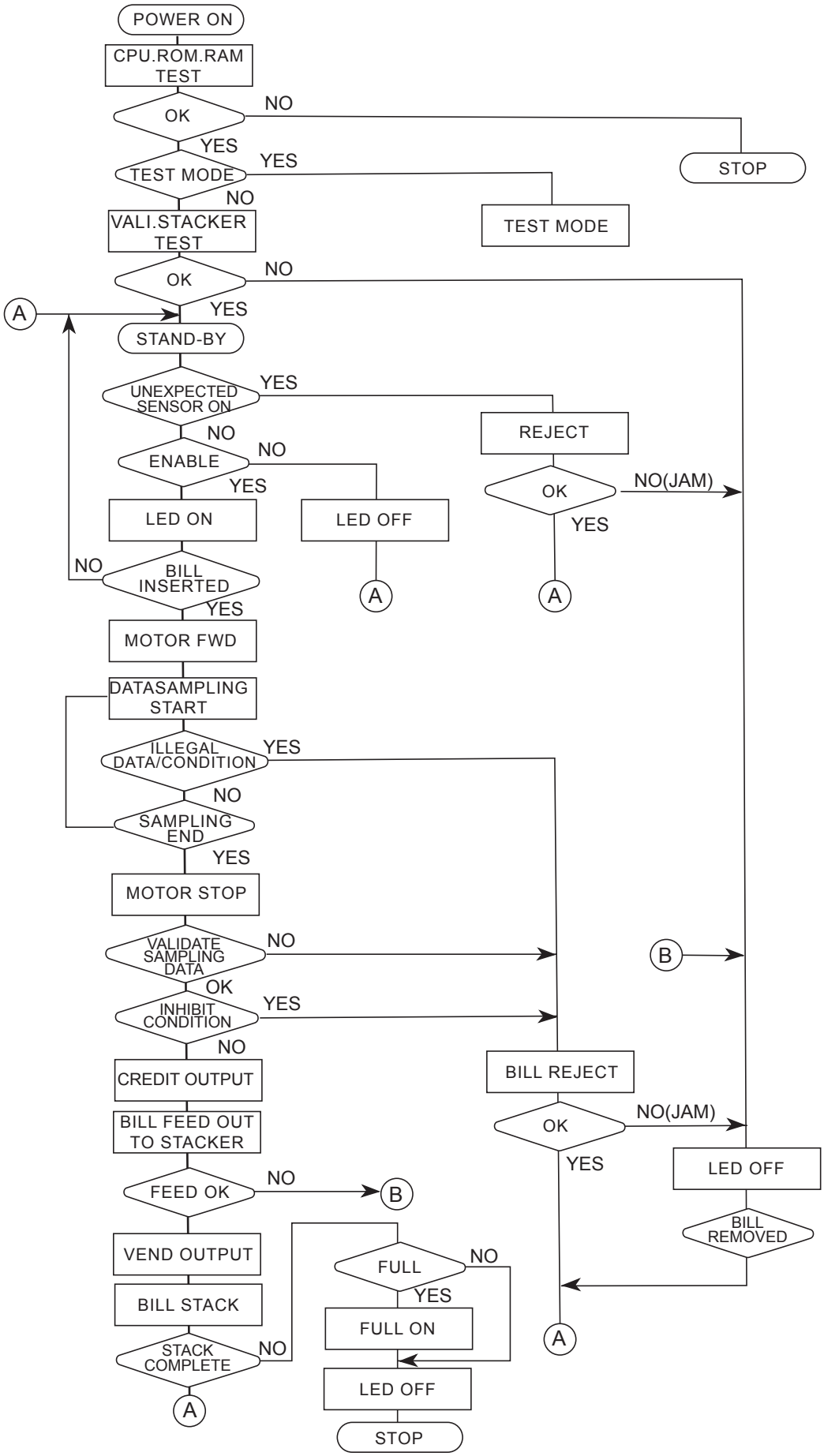

9. Retrieving Bills

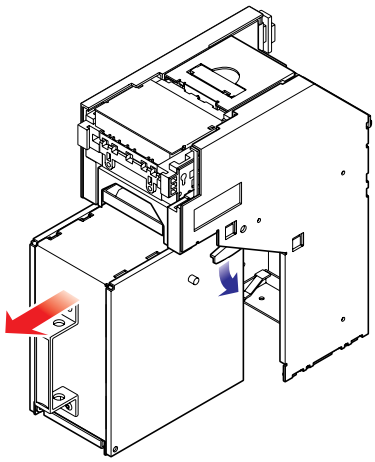

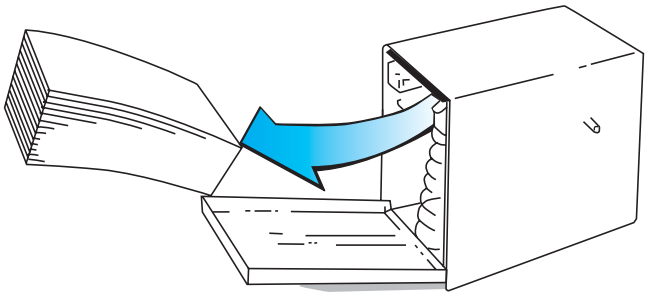

1. Push the release lever down and pull the cash box forward.

2. Open the cash box cover and remove the bills.

10. Clearing Bill Jam

1. Pull the tabs on both sides of the acceptor forward to open the acceptor head. Remove the jammed bill.

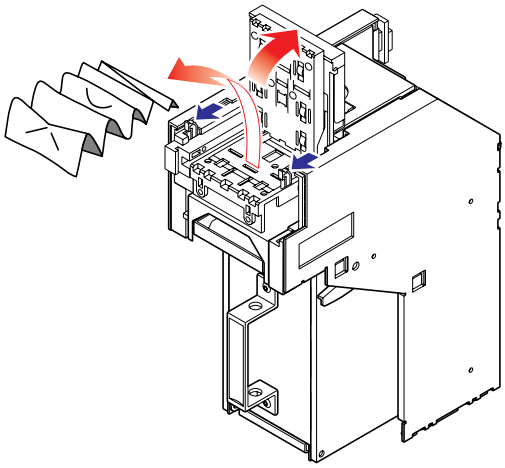

2. If the jammed bill cannot be removed by opening the acceptor, pull the transport unit open/close lever to open the transport cover and remove the jammed bill.

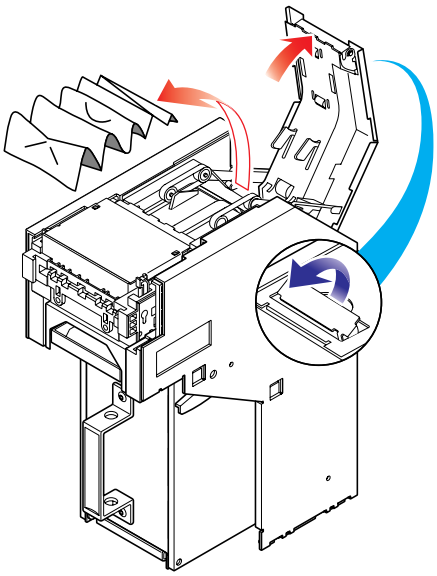

3. When a bill is jammed near the inlet of the cash box, push the release lever down to pull out the cash box and remove the jammed bill.

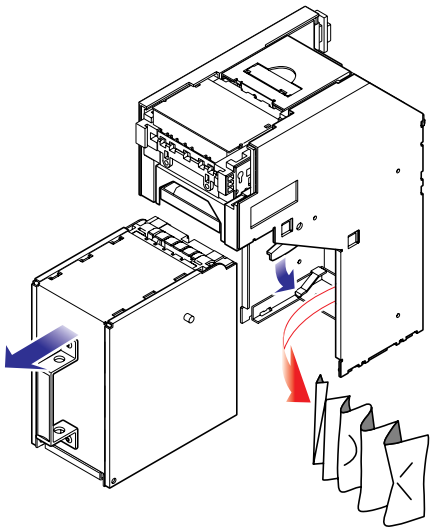

11. Preventive Maintenance

It is important to keep the bill path, rollers, and belts clean. The sensor lenses are transparent, and made of polymer material. Handle them with care.

To clean the lenses, use a lint-free cloth and mild non-abrasive detergent such as liquid dish soap mixed with water.

Do not use alcohol or thinner for cleaning.

Note: JCM recommend Cleaning Cards #G00173
For further information please contact
Sales@jcm-germany.com

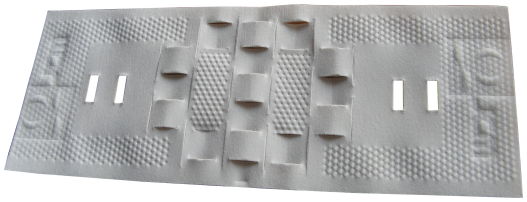

G 00173

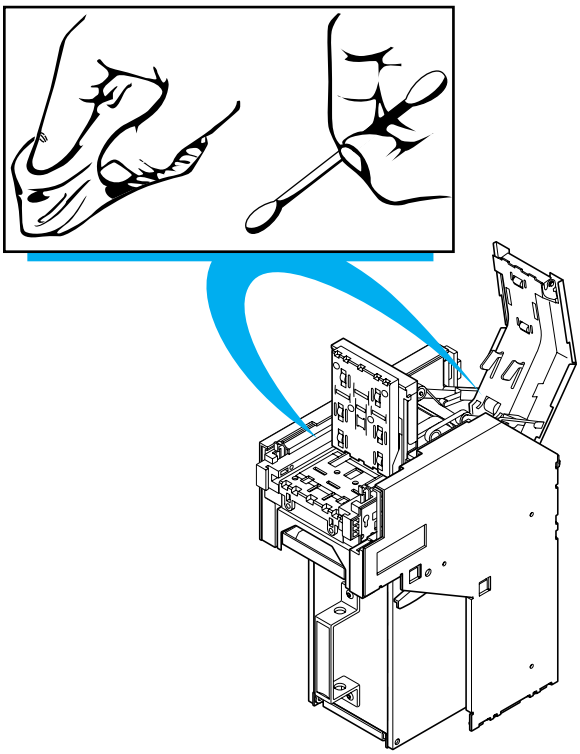

Cash box Preventive Maintenance (P/M)
Do periodic P/M on the cash boxes to ensure proper operation. Use compressed air to blow out the paper fibers and other debris that builds up over time. Check the belts and all moving parts for wear and proper positioning. If the unit does not operate properly, it can cause bill jams. After completing the P/M, Auto-Calibration is recommended (Refer to Chapter 7).

WORLD BILL ACCEPTOR

WBA-12-SS
WBA-13-SS
WBA-22-SS
WBA-23-SS
WBA-24-SS2
WBA-25-SS2

CHAPTER 4

Disassembly and Assembly

Date: August, 2007

JCM GLOBAL JAPAN CASHMACHINE CO., LTD.

Contents

1 Disassembly of Unit

1. Pull down the acceptor head release lever to pull out the acceptor head.

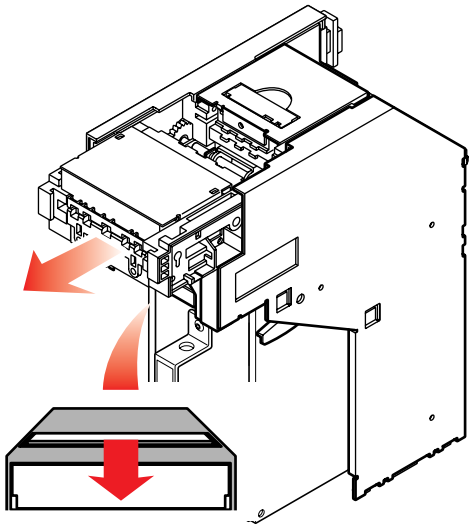

2. Pull down the transfer unit release lever and pull out the transfer unit.

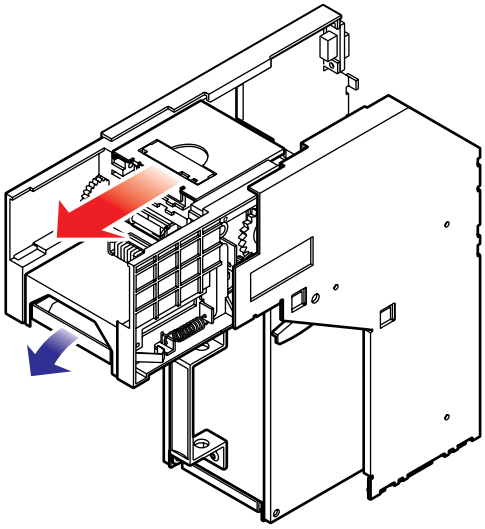

3. Press down the cash box release lever to pull out the cash box.

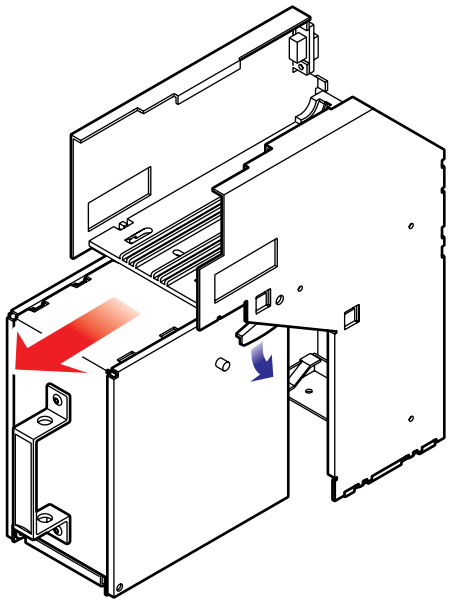

2 Disassembly of Validator Unit

1. Removing the upper sensor board

(1) While pushing down latches using a small screwdriver, slide the metal cover off. The latches are located inside recess on the metal cover (2 locations).

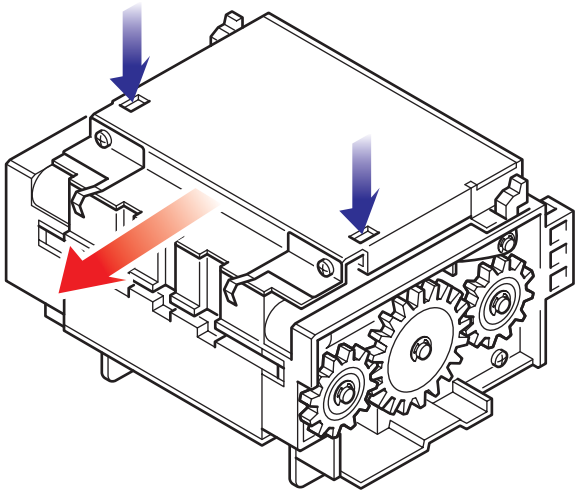

(2) Disconnect the harness from the sensor board and remove 3 screws to remove the sensor board.

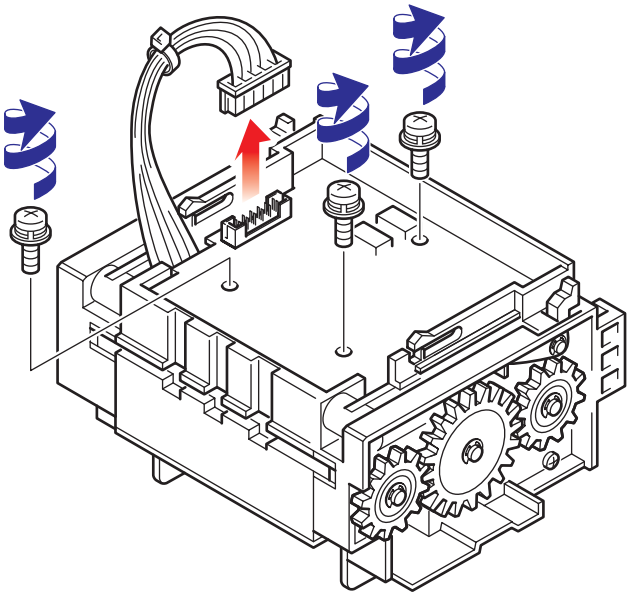

2. Removing the lower sensor board

(1) Remove 4 screws on each side and disconnect the harness to remove the cover.

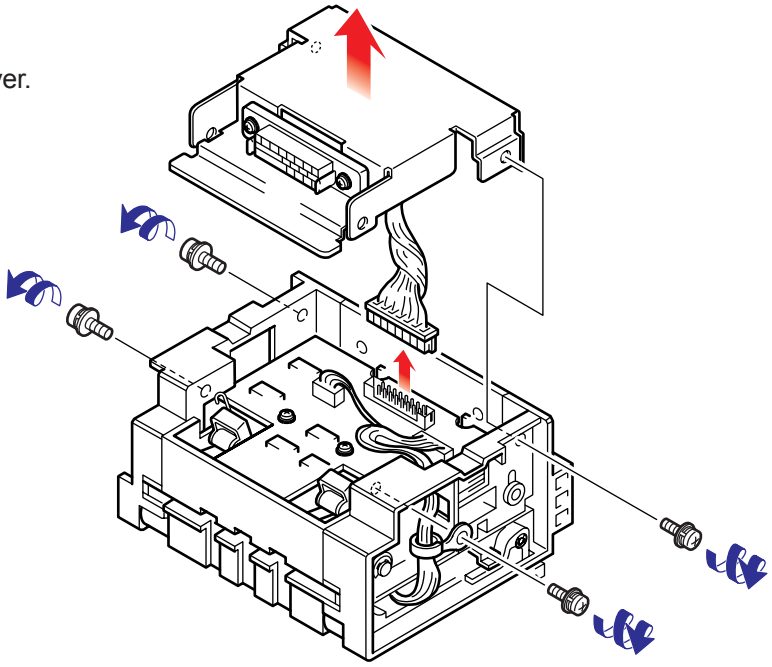

(2) Remove 3 screws securing the lower sensor board and remove the sensor board.

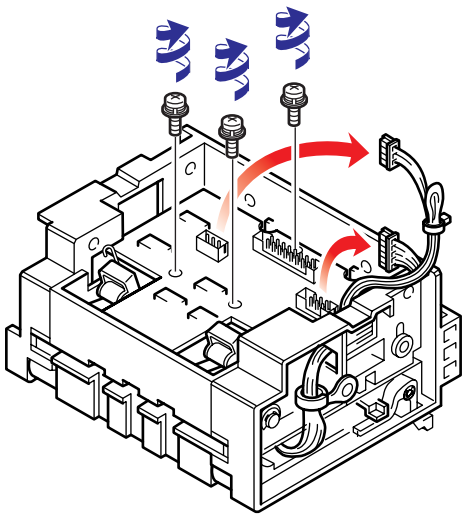

(3) Remove the E-ring from the shaft and remove the gear. Remove 2 screws and 2 washers which secure the belt tension assembly on both sides.

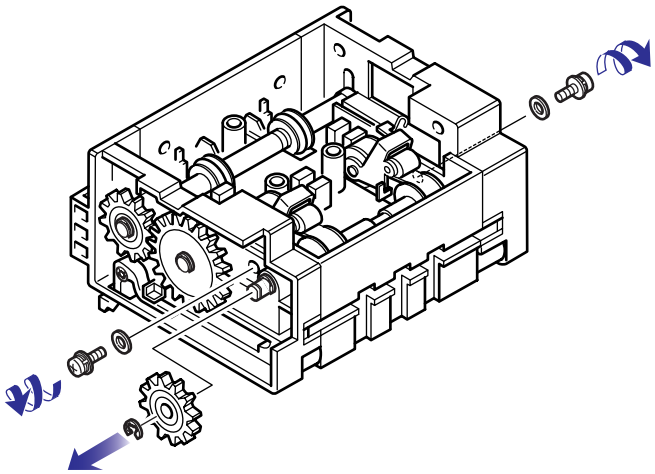

(4) Remove the E-ring from the shaft and shift the shaft toward the opposite side. At this time, two pins which fix the gear will pop up. Remove these pins. Pull out the shaft completely and remove the 2 belt tension assembly units.

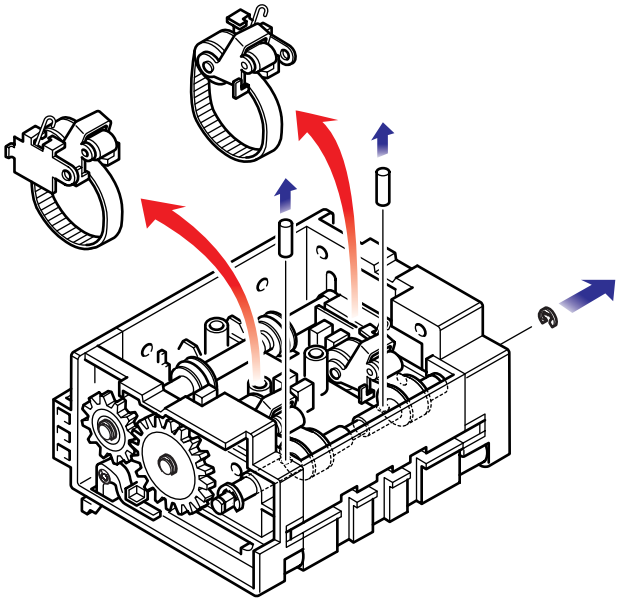

(5) Remove the E-ring and disassemble the unit into belts, tension rollers, pulleys, tension springs, and shaft.

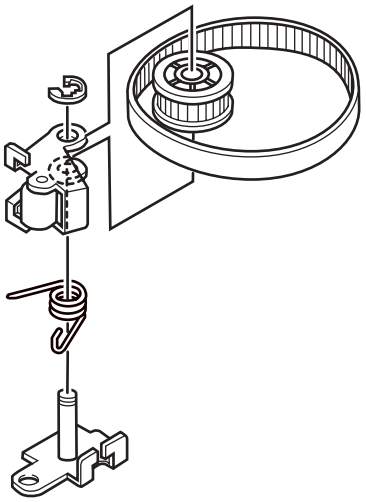

3. Disassembly of Transport Unit

1. Removing the CPU board assembly

(1) Disconnect 9 connectors from the CPU board.

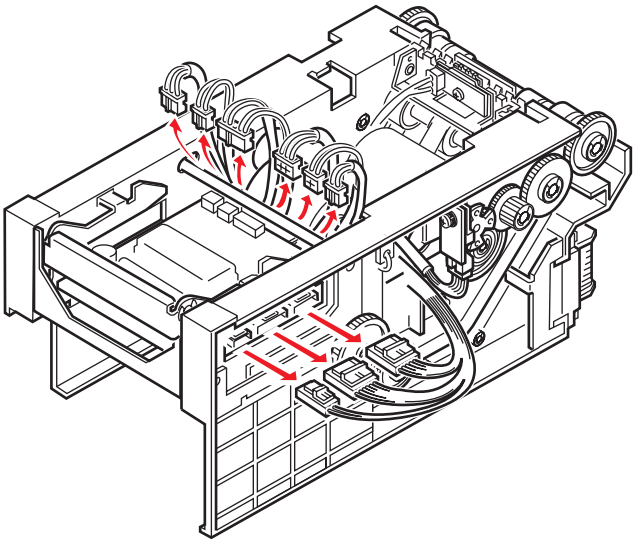

(2) Remove 2 screws securing the CPU board assembly on both sides and remove 1 screw from the validator catch to remove the beam. Then, pull out the CPU board.

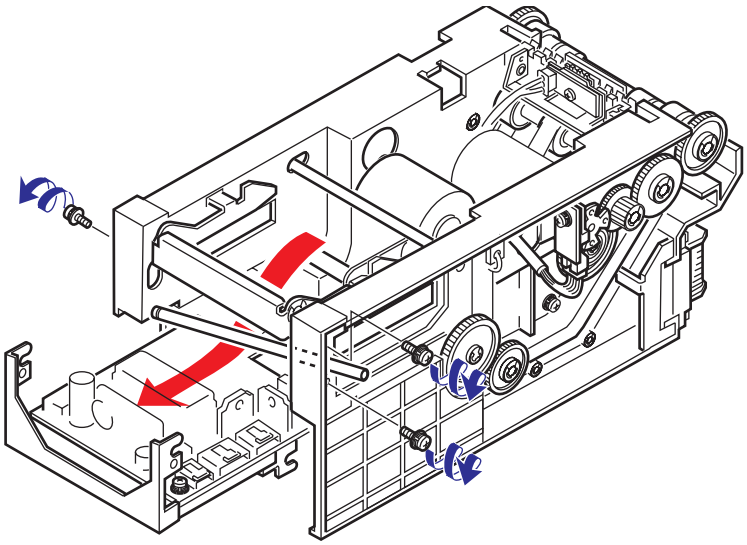

(3) Remove 1 screw from the CPU board and disconnect the harness to the underside of the board.

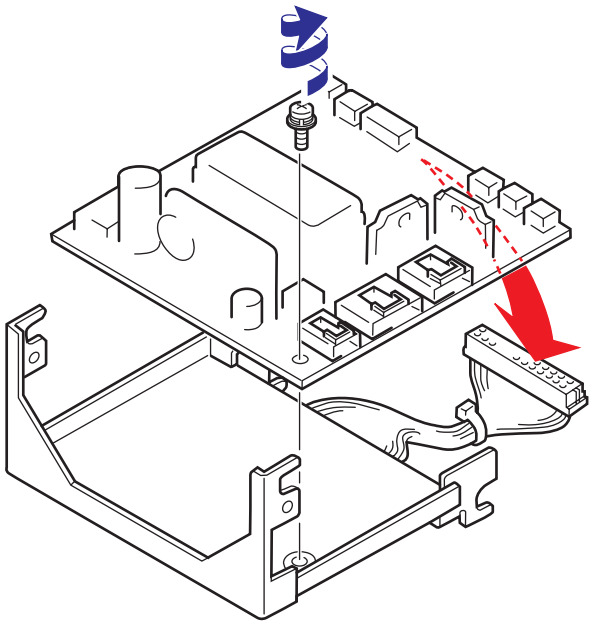

2. Removing the stack motor and encoder sensor board

(1) Remove 1 mounting screw of the encoder sensor board and pull out the encoder sensor board. Then, disconnect the harness of the encoder sensor board.

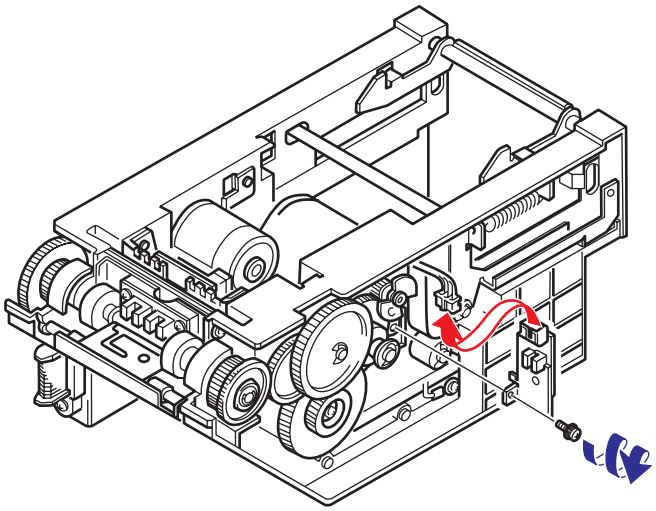

(2) Insert a screwdriver into the notch of the stack motor encoder and remove 2 mounting screws to remove the motor.

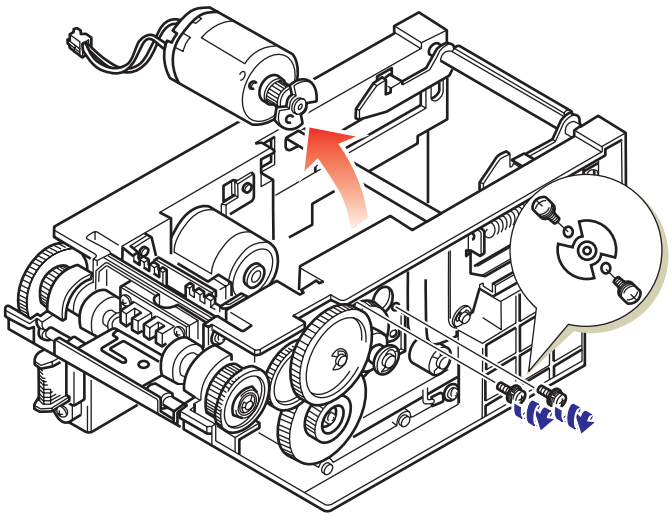

3. Removing the driving motor, encoder sensor board, and lever sensor board

(1) Remove 1 mounting screw of the encoder sensor board and pull out the encoder sensor board. Disconnect the harness on the encoder sensor board.

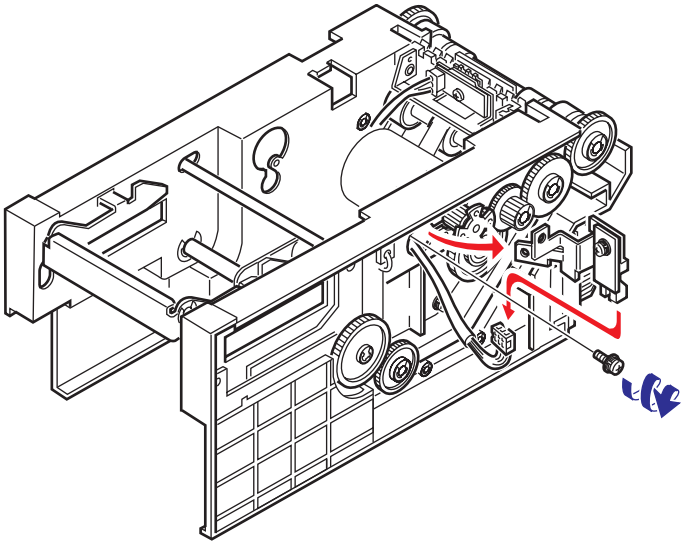

(2) Insert the screwdriver into the notch of the driving motor encoder and remove 2 mounting screws to remove the motor.

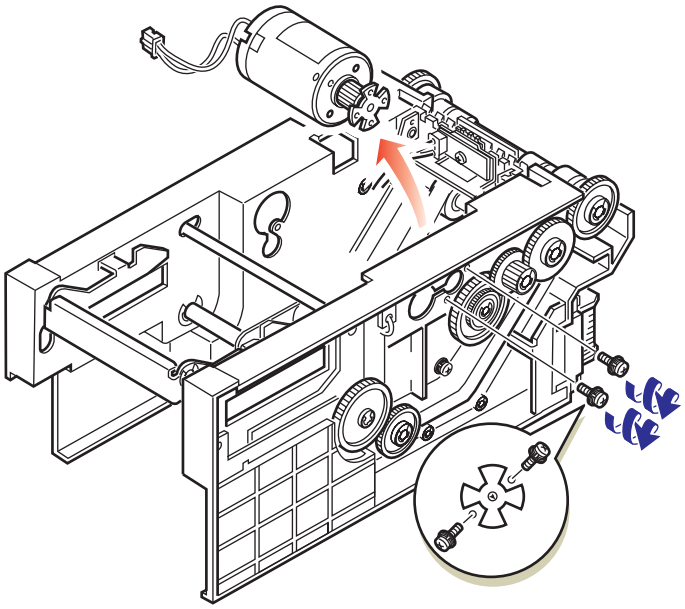

(3) Remove 1 screw and disconnect the harness to remove the lever sensor board.

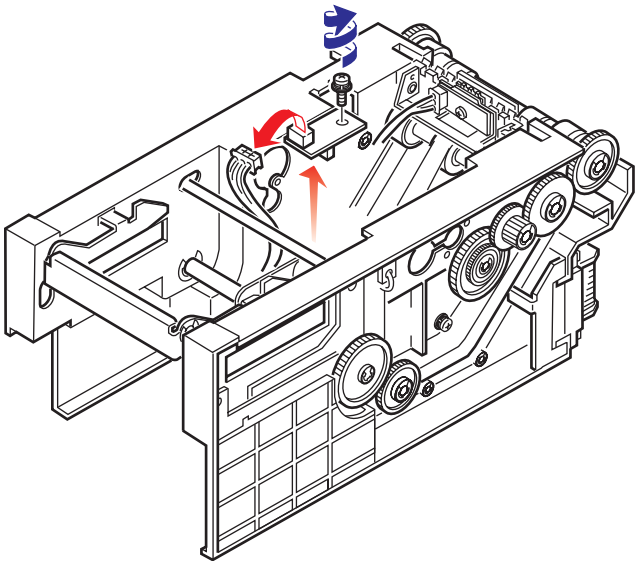

4. Removing the solenoid lever assembly and solenoid lever sensor board

(1) Pull out the latch lever and pull up the entire solenoid lever cover. Remove 1 screw at the tip to remove the TR cover.

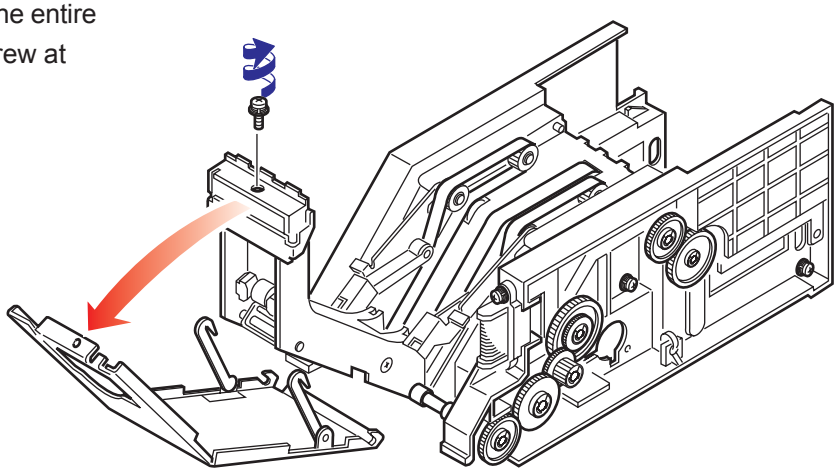

(2) Remove 2 screws and disconnect the harness to remove the solenoid lever sensor board.

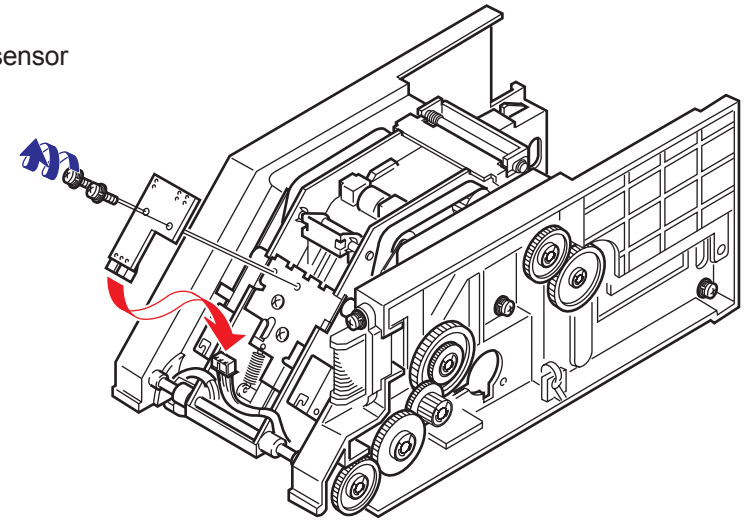

(3) Remove the spring at the lower portion of the solenoid lever assembly. Remove 2 screws on both sides and 4 E-rings, and pull out the shaft to remove the solenoid lever assembly.

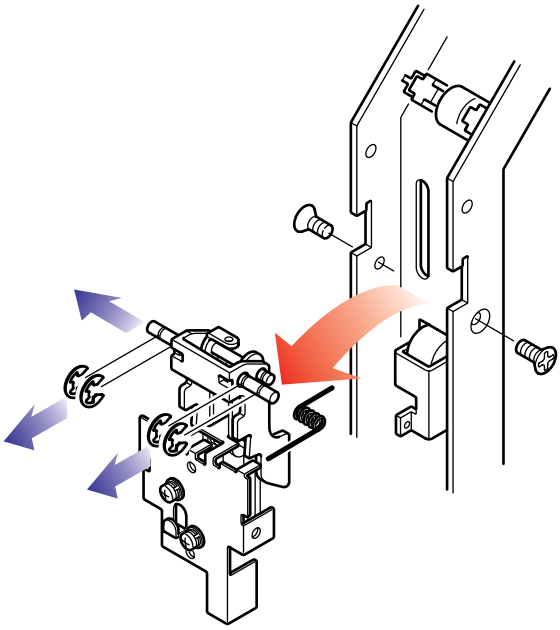

(4) Disassembly diagram of solenoid lever assembly.

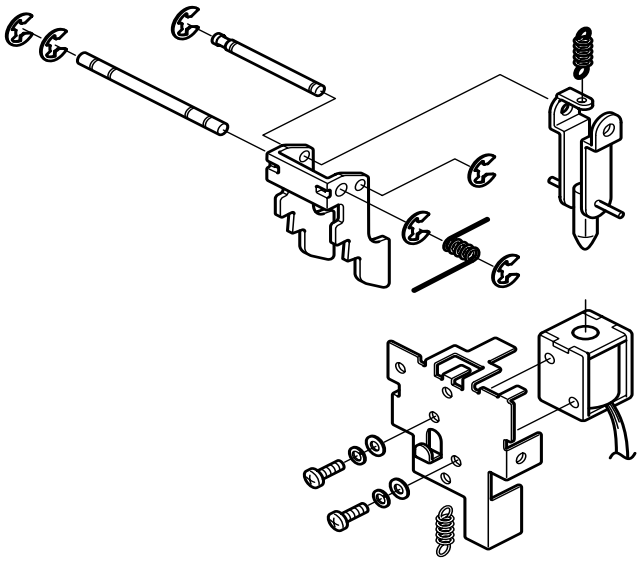

5. Removing the feed-out sensor board assembly

(1) Remove 2 screws, one each side, and disconnect the harness to remove the feed-out sensor board.

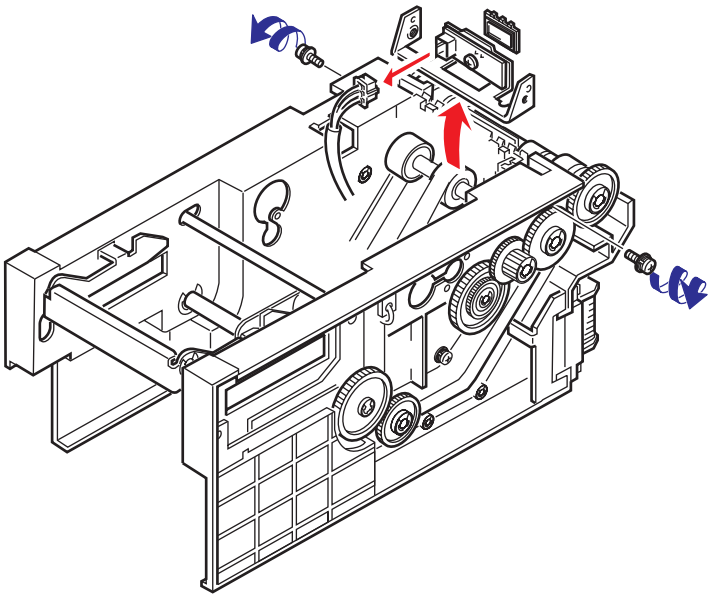

(2) Disassembly diagram of feed-out sensor board assembly.

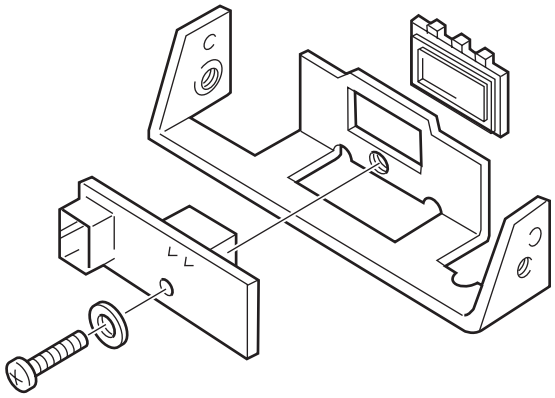

6. Removing the upper timing belt and home position sensor board assembly

(1) Remove the E-ring and remove the gears on both sides. At this time, a pin will pop-up from the left gear. Remove this pin.

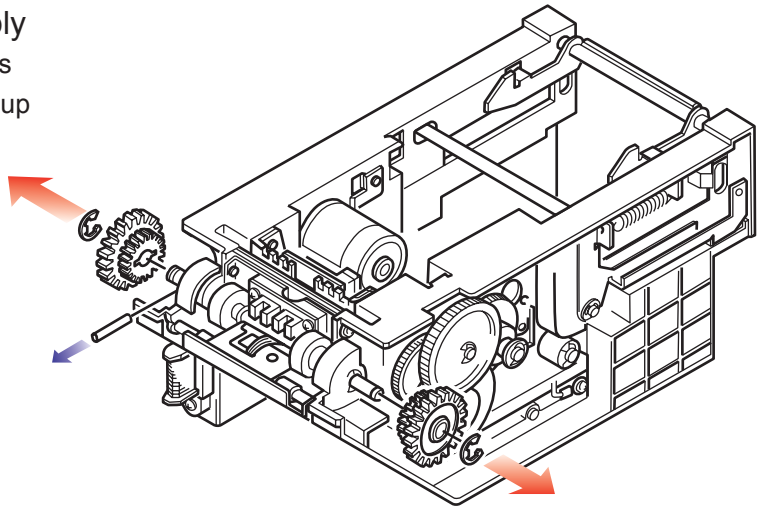

(2) Remove 4 screws, 2 each side, and pull out the home position sensor board to disconnect the harness.

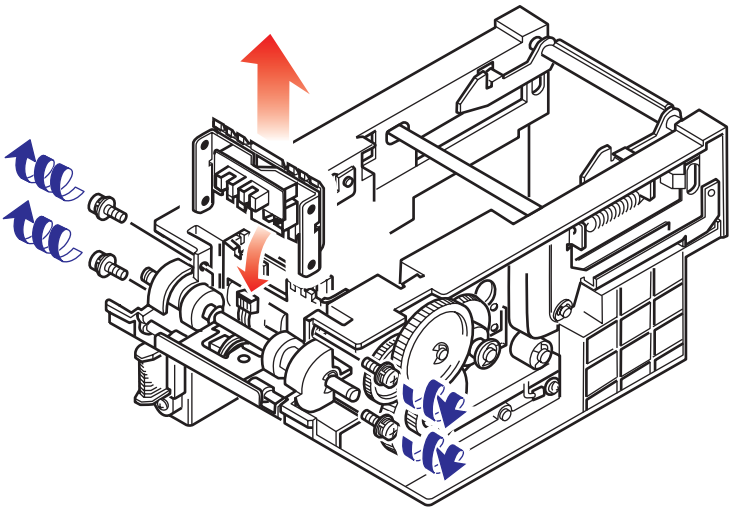

(3) Remove 3 E-rings and a washer. Next, shift the timing belt wheel toward the inner side and pull out 2 pins. The shaft can be removed from the left side. Remove the timing belt.

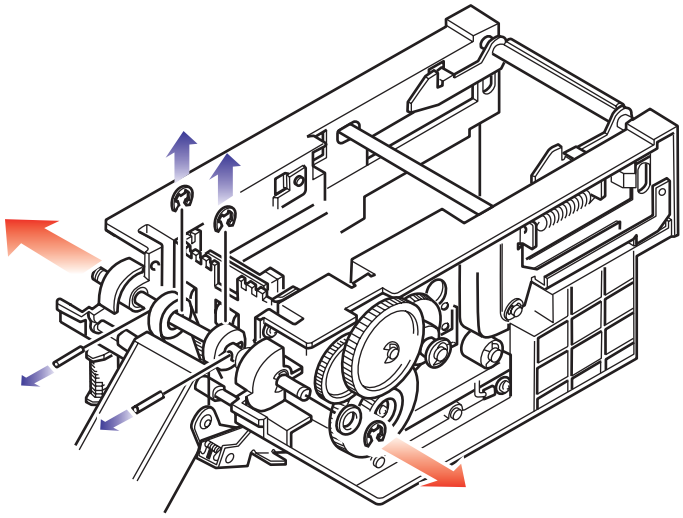

(4) Disassembly diagram of shaft

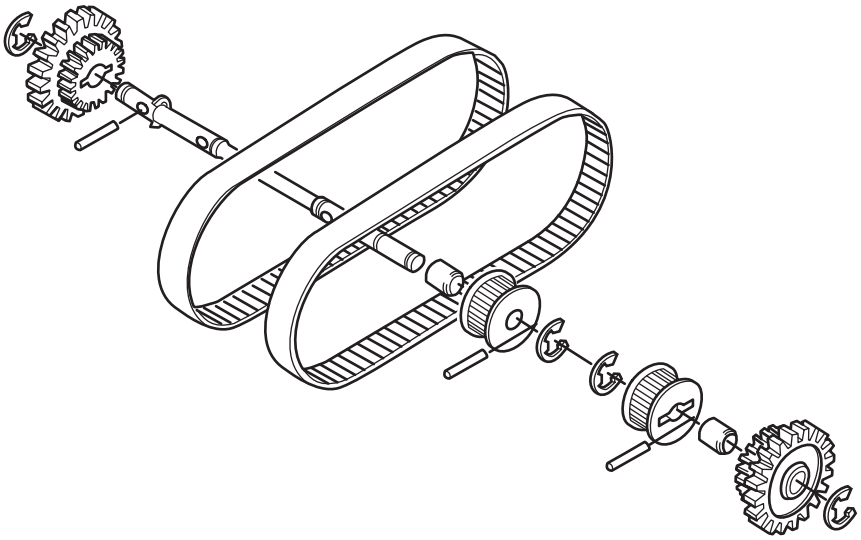

7. Removing the lower timing belt

(1) Remove 7 E-rings. 3 gears, 1 pin, and 4 screws.

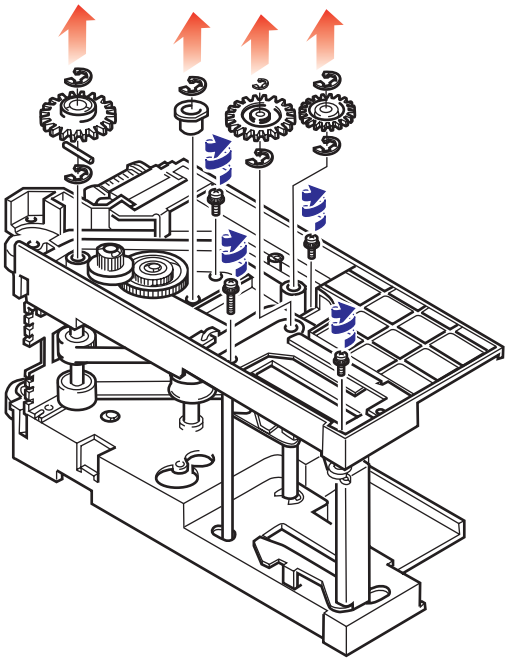

(2) Separate the transfer unit to remove the timing belt.

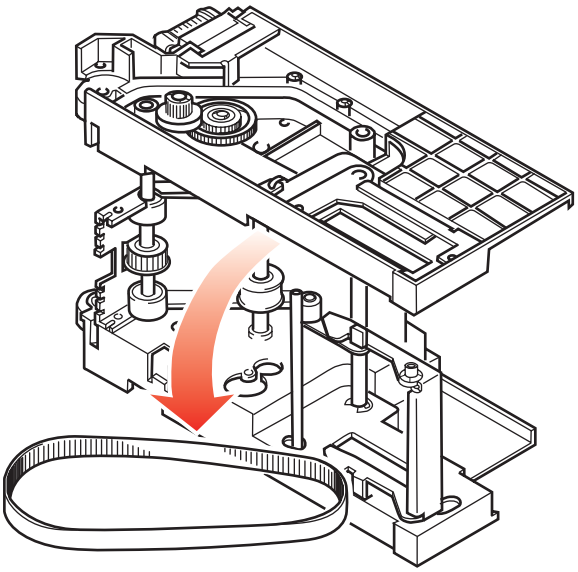

4 Disassembly of Cash Box

1. Removing the pusher mechanism unit

(1) Remove 2 screws and pull out the pusher mechanism unit.

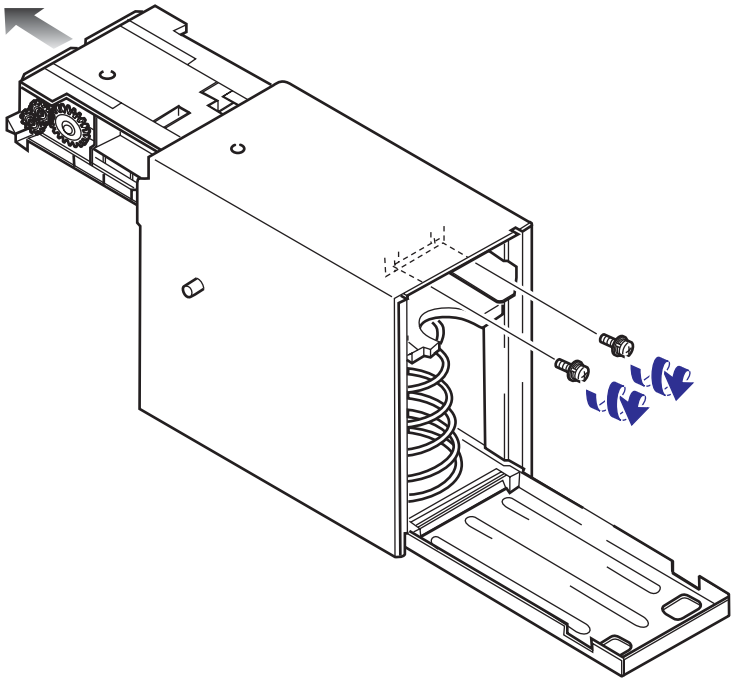

(2) Remove 6 screws on both sides to remove the pusher mechanism.

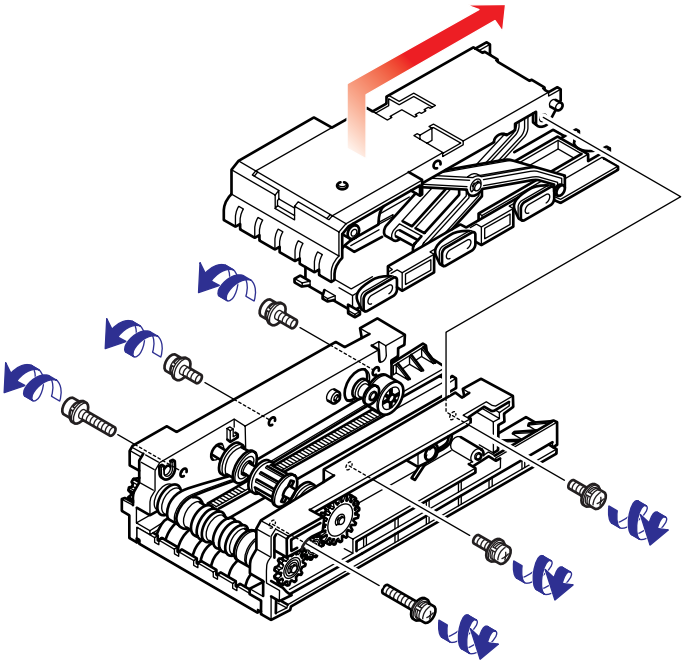

2. Removing the timing belt

(1) Remove 2 screws on both sides to remove the coupling bracket.

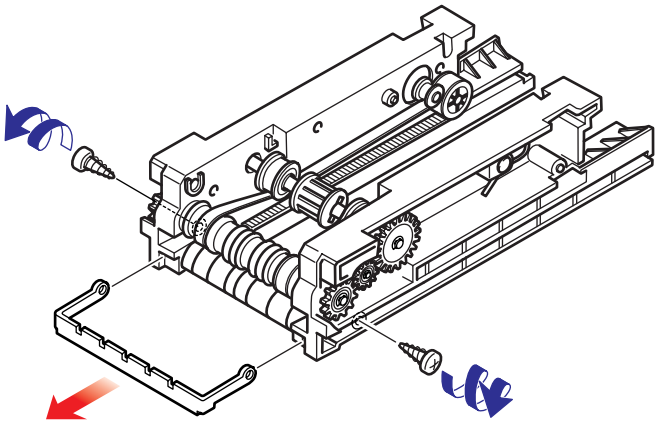

(2) Remove 4 E-rings, 2 gears, 1 pin, and 2 bearings to remove the spring fixed on the shaft.

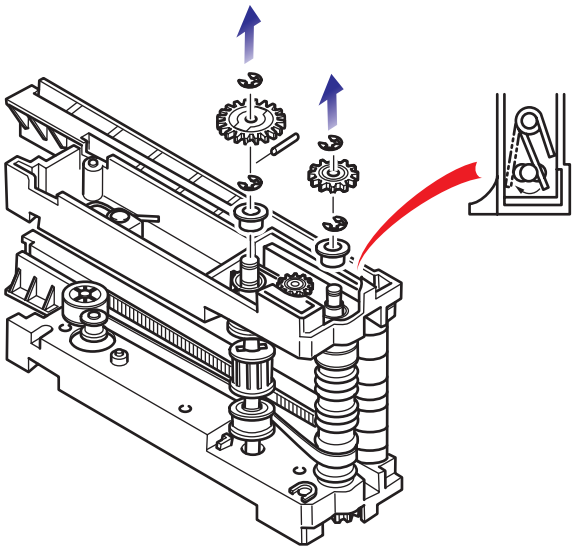

(3) Separate the pusher mechanism to remove the timing belt.

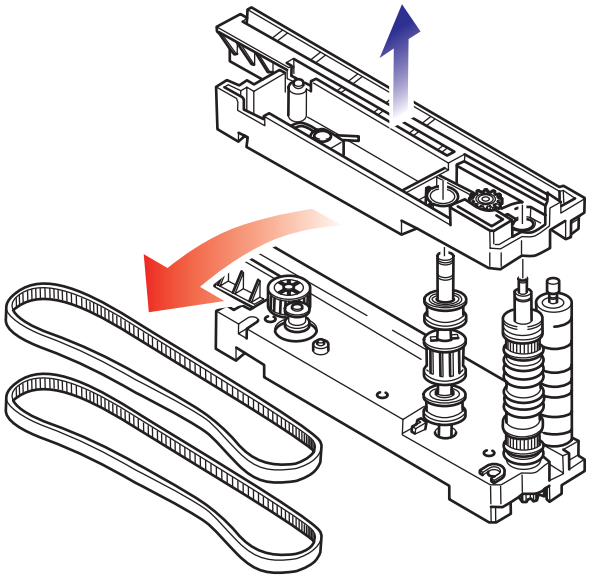

WORLD BILL ACCEPTOR

WBA-12-SS
WBA-13-SS
WBA-22-SS
WBA-23-SS
WBA-24-SS2
WBA-25-SS2

CHAPTER 5

Wiring Diagram

Date: August, 2003

JCM GLOBAL JAPAN CASHMACHINE CO., LTD.

Contents

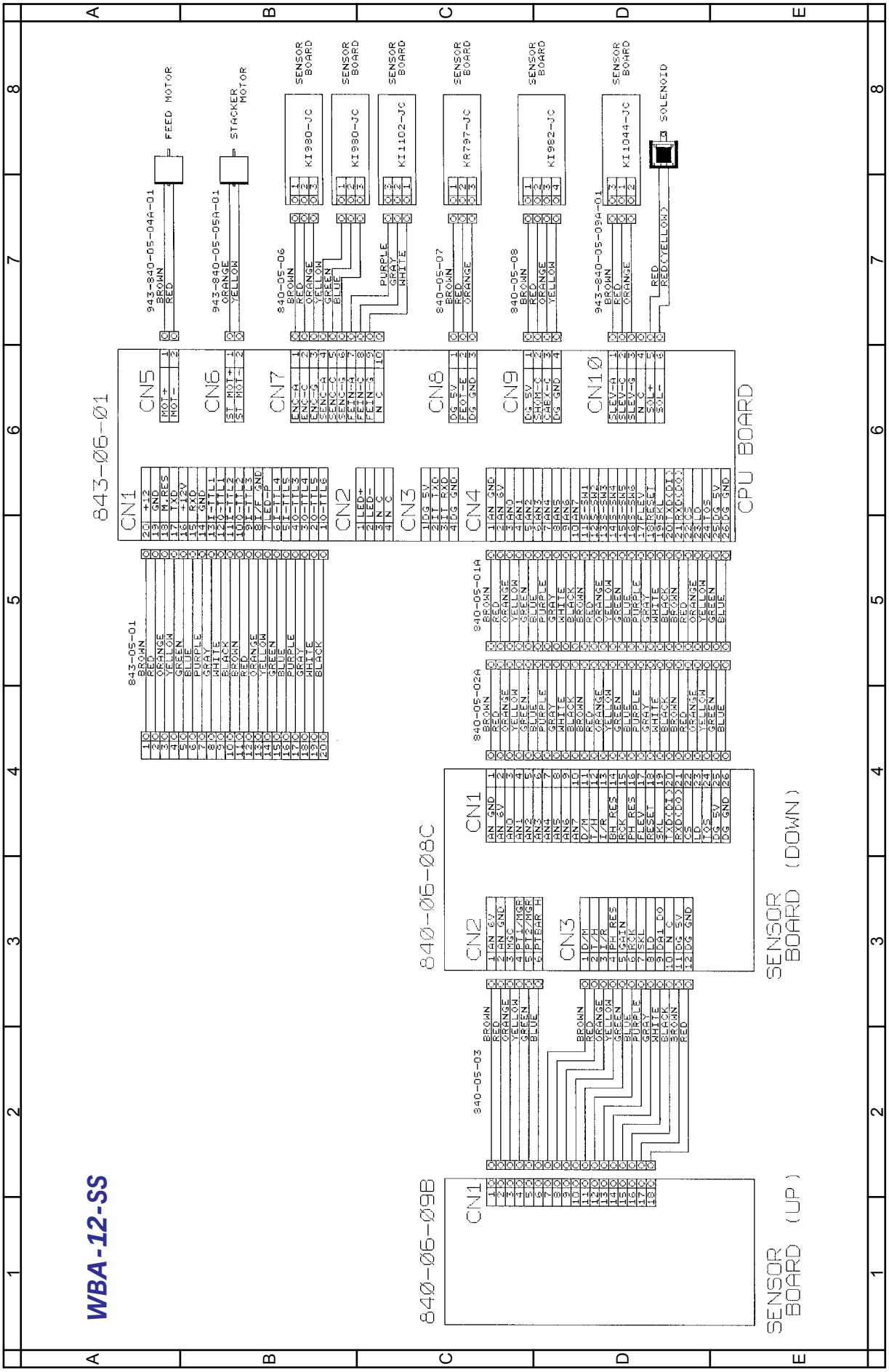
WBA-12-SS
843-06-01
CPU BOARD
CN1
CN2
CN3
CN4
CN5
CN6
CN7
CN8
CN9
CN10
FEED MOTOR
STACKER MOTOR
SENSOR BOARD
SOLENOID
840-06-08C
SENSOR BOARD (DOWN)
840-06-09B
SENSOR BOARD (UP)
840-05-03
840-05-01A
840-05-02A
843-05-01

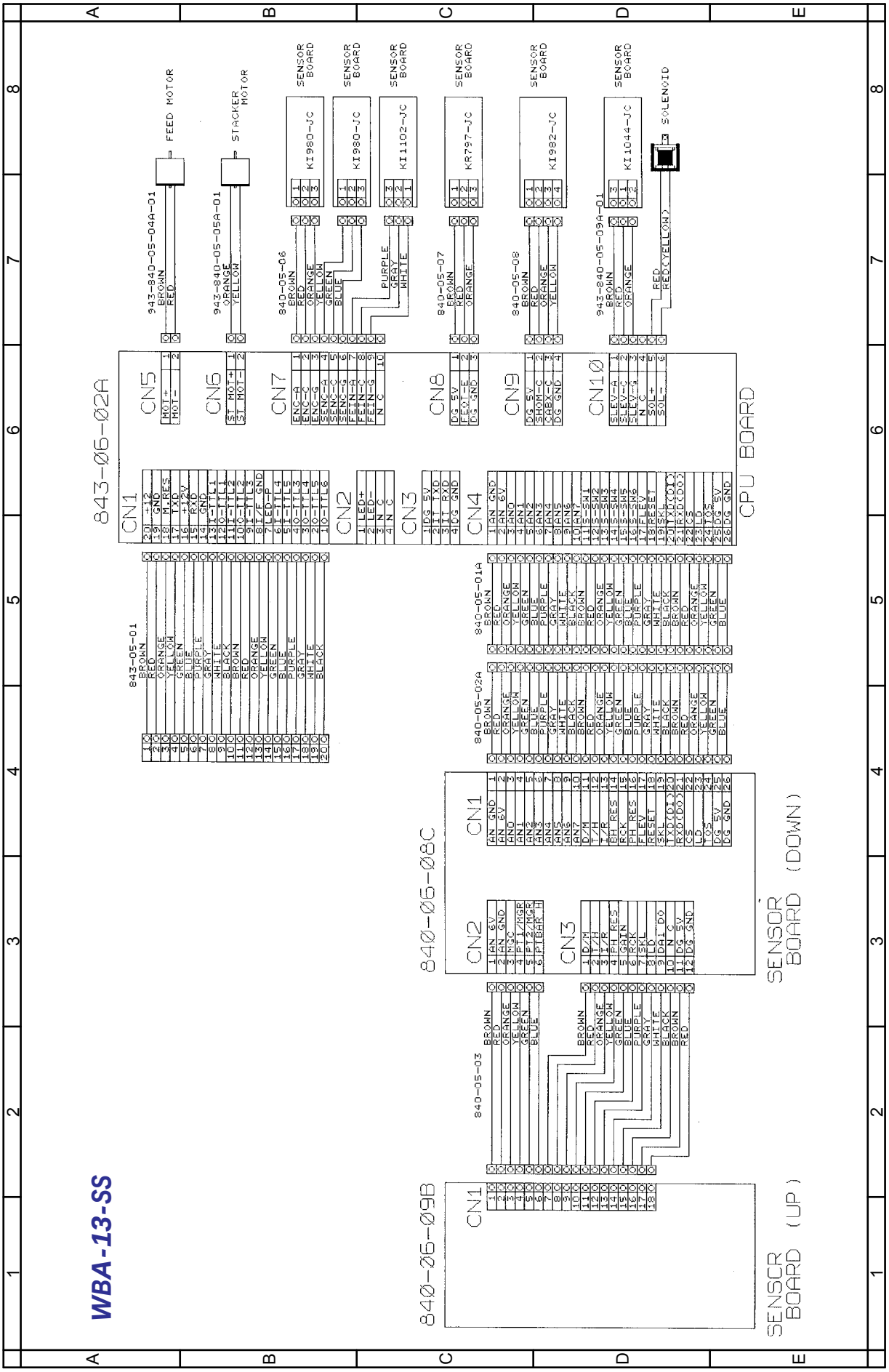
843-06-02A
CPU BOARD
CN1
CN2
CN3
CN4
CN5
CN6
CN7
CN8
CN9
CN10
FEED MOTOR
STACKER MOTOR
SENSOR BOARD
SOLENOID
840-05-06
840-05-07
840-05-08
840-05-01A
840-05-02A
840-05-03
840-06-08C
840-06-09B
SENSOR BOARD (DOWN)
SENSOR BOARD (UP)

WBA-13-SS

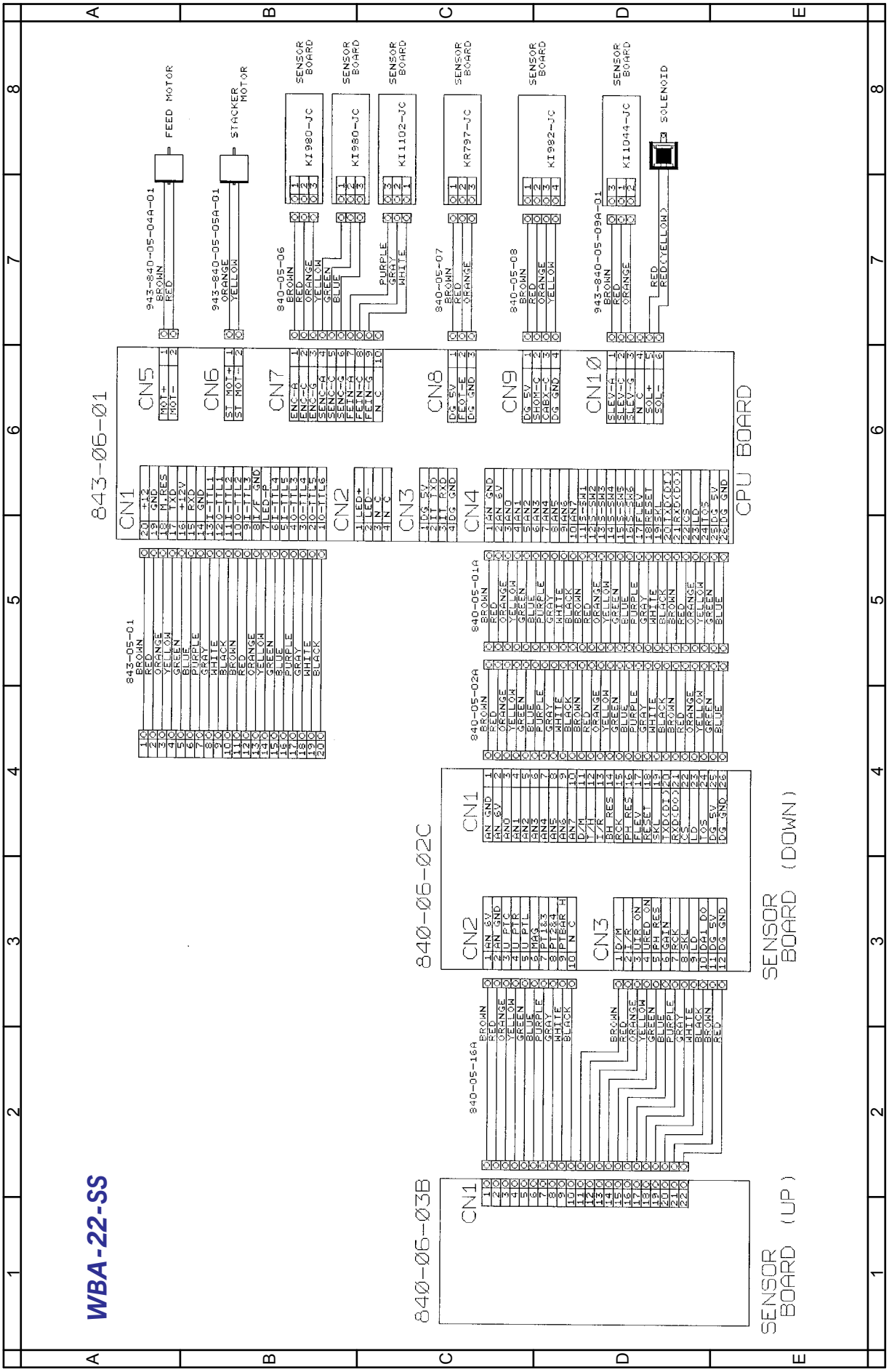
WBA-22-SS
843-06-01
CPU BOARD
CN1
CN2
CN3
CN4
CN5
CN6
CN7
CN8
CN9
CN10
FEED MOTOR
STACKER MOTOR
SENSOR BOARD
SOLENOID
840-06-02C
SENSOR BOARD (DOWN)
840-06-03B
SENSOR BOARD (UP)

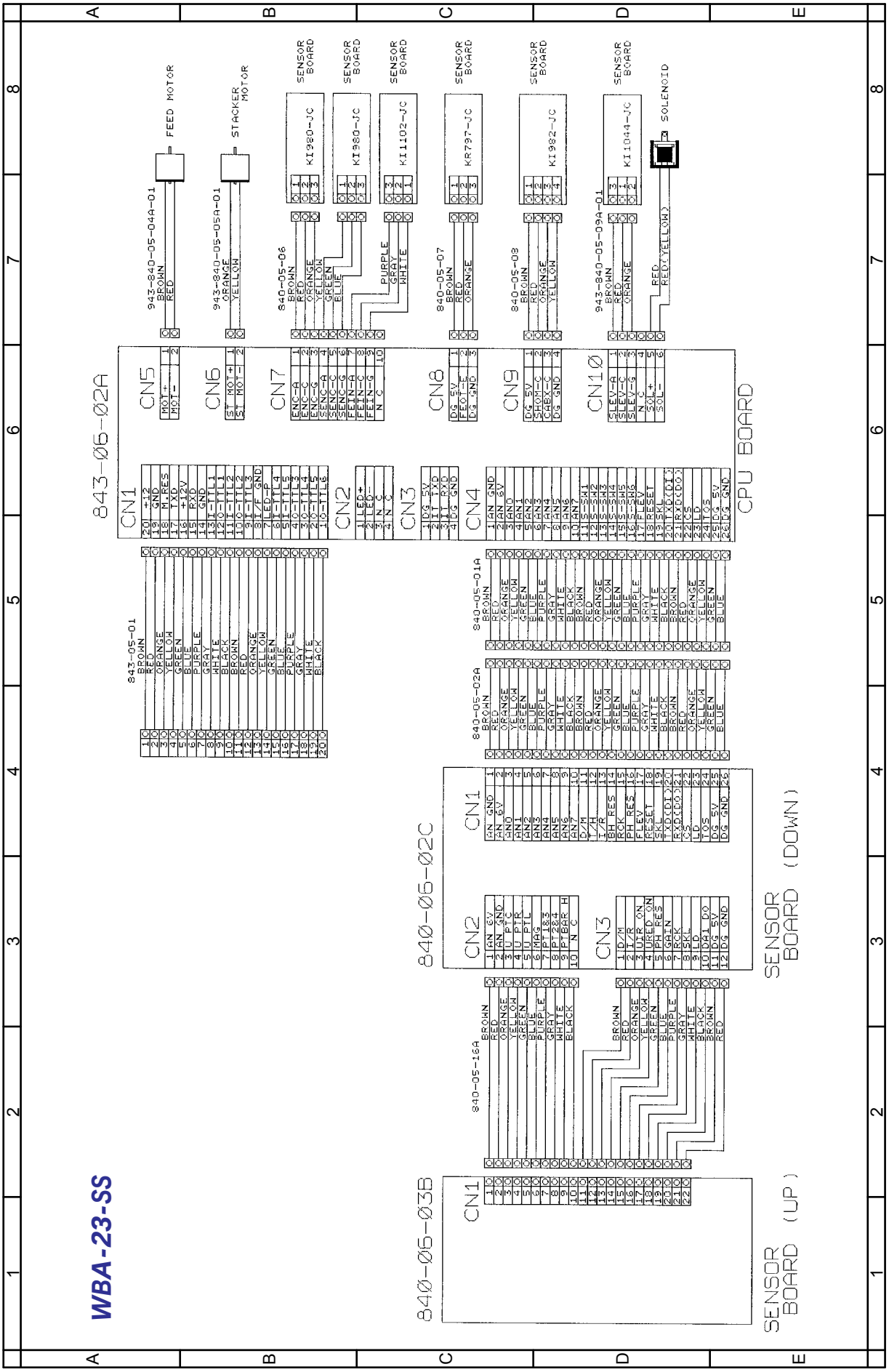
WBA-23-SS
843-06-02A
CPU BOARD
CN1
CN2
CN3
CN4
CN5
CN6
CN7
CN8
CN9
CN10
FEED MOTOR
STACKER MOTOR
SENSOR BOARD
SOLENOID
840-06-02C
SENSOR BOARD (DOWN)
840-06-03B
SENSOR BOARD (UP)

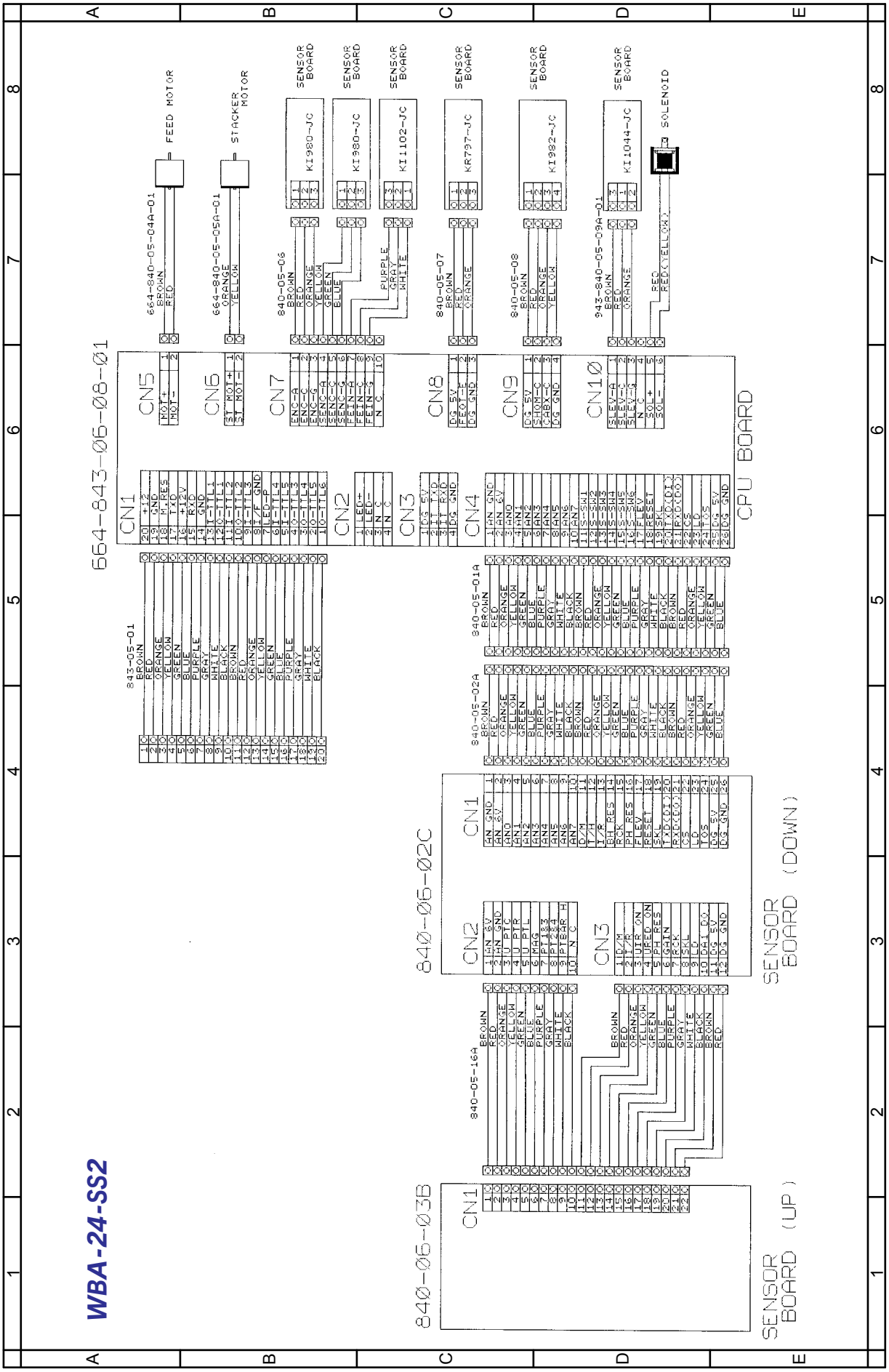
WBA-24-SS2
664-843-06-08-01
CPU BOARD
FEED MOTOR
STACKER MOTOR
SENSOR BOARD
SOLENOID
840-06-02C
SENSOR BOARD (DOWN)
840-06-03B
SENSOR BOARD (UP)

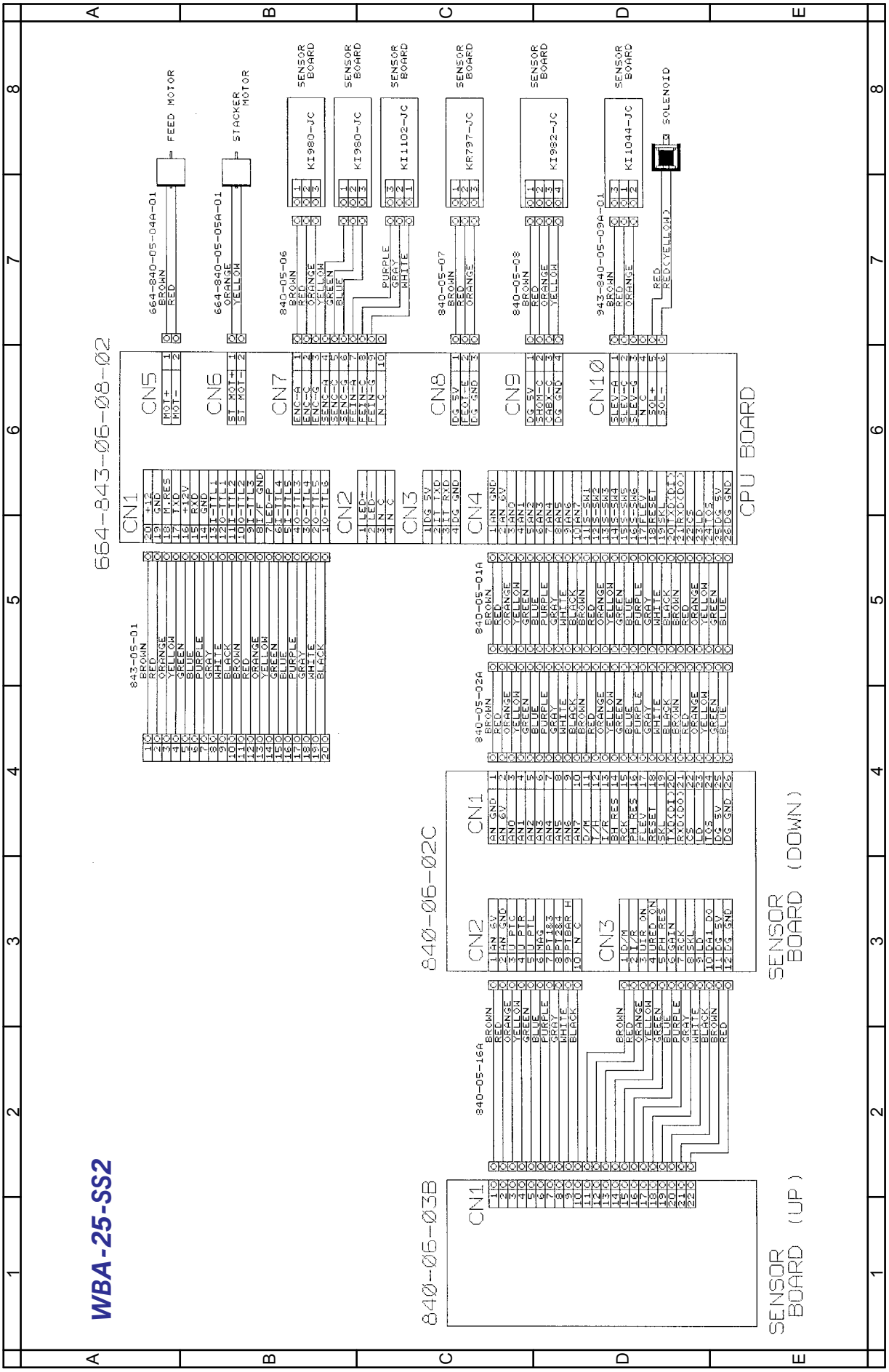
WBA-25-SS2
664-843-06-08-02
CPU BOARD
FEED MOTOR
STACKER MOTOR
SENSOR BOARD
SOLENOID
840-06-02C
SENSOR BOARD (DOWN)
840-06-03B
SENSOR BOARD (UP)

WORLD BILL ACCEPTOR

WBA-12-SS
WBA-13-SS
WBA-22-SS
WBA-23-SS
WBA-24-SS2
WBA-25-SS2

CHAPTER 6

Trouble Shooting

Date: August, 2003

JCM GLOBAL JAPAN CASHMACHINE CO., LTD.

[INTRODUCTION]

Most failures in the acceptor occur due to a minor cause. It is important to check that the connector is properly connected and that the harness is not disconnected, before replacing parts.
Poorly accepting of bills by the acceptor is often due to a fact that iron content adheres to the magnetic head or the magnetic head roller. Therefore the acceptor should be cleaned.
To determine the cause of the failure and fine defective parts, it is important to observe in detail the operating state of the acceptor when the power is turned on.
The use of the test mode of WBA also allows the cause of the failure to be checked.
When the acceptor head has been disassembled to repair or when the sensor board has been replaced, the sensor should be adjusted.
The repair should be performed referring to the adjustment manual, the wiring diagram and the disassembling procedures.

[CLASSIFICATION OF FAILURE]

The cause of failure can be broadly classified into the following four failures. Check the operating state.

(1) Test mode fails to be entered.

(2) Initial operation is error.

(3) Bills are rejected or poorly accepted.

(4) Bills are transferred not smoothly.

(1) Test mode fails to be entered

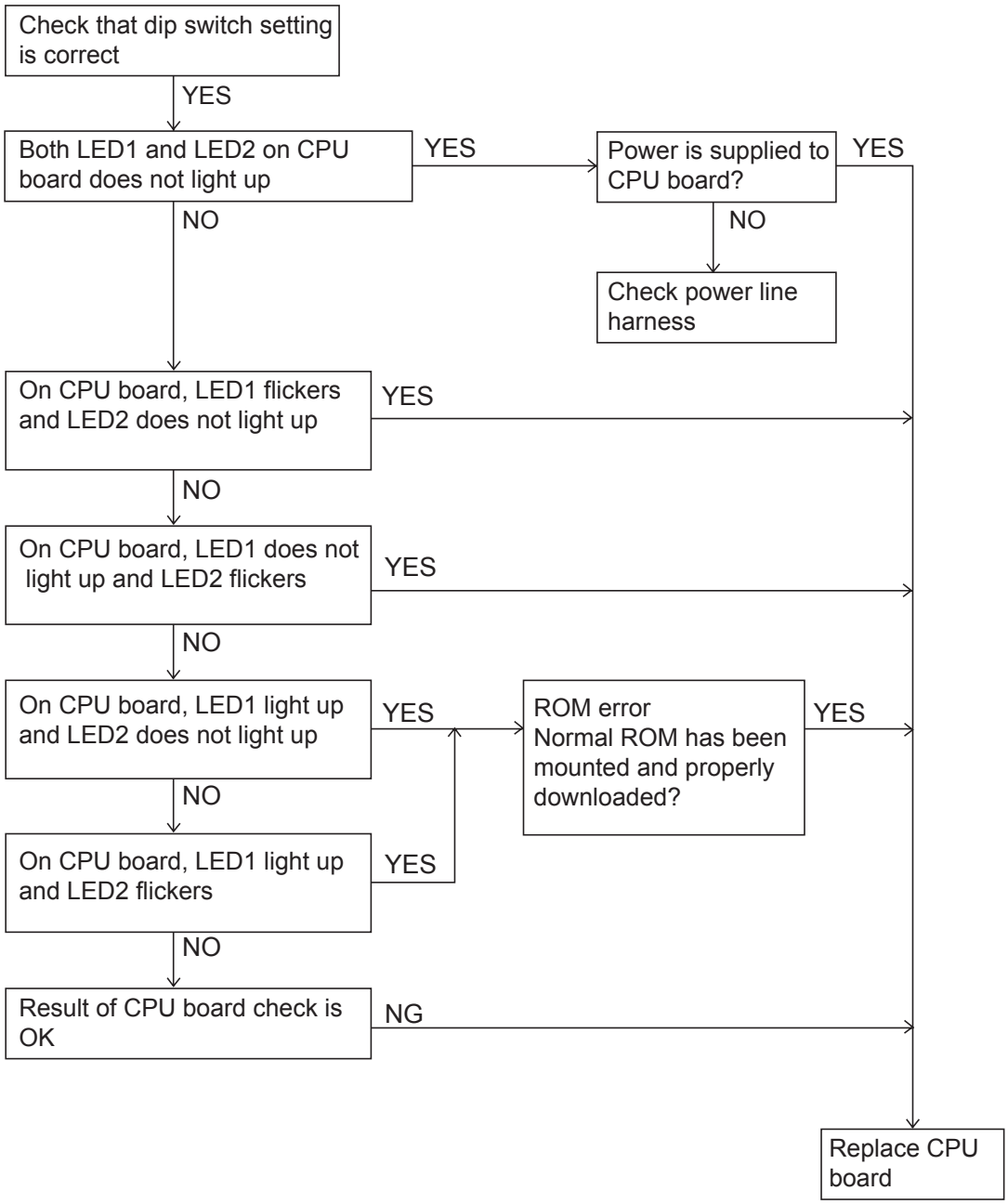

(2) Initial operation is error

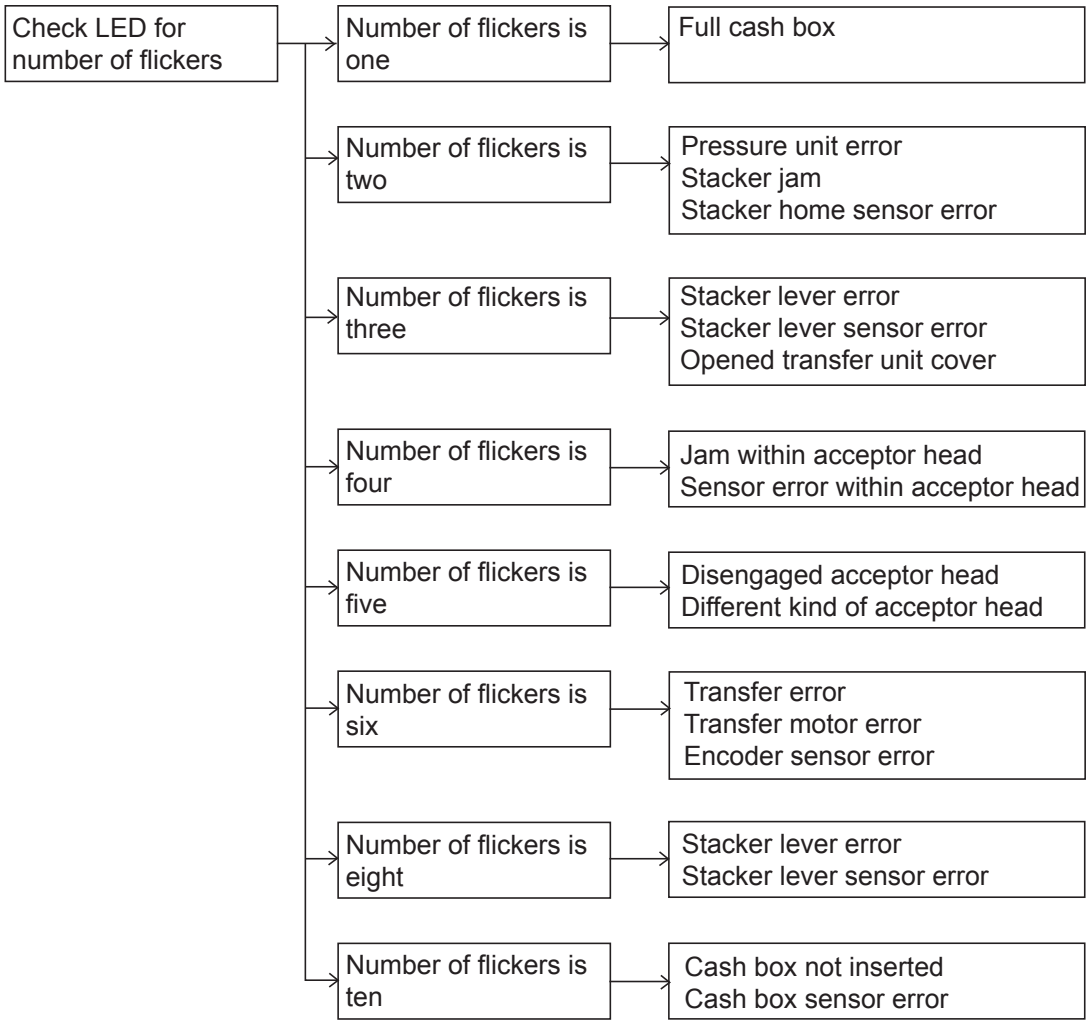

(3) Bills are rejected or poorly accepted

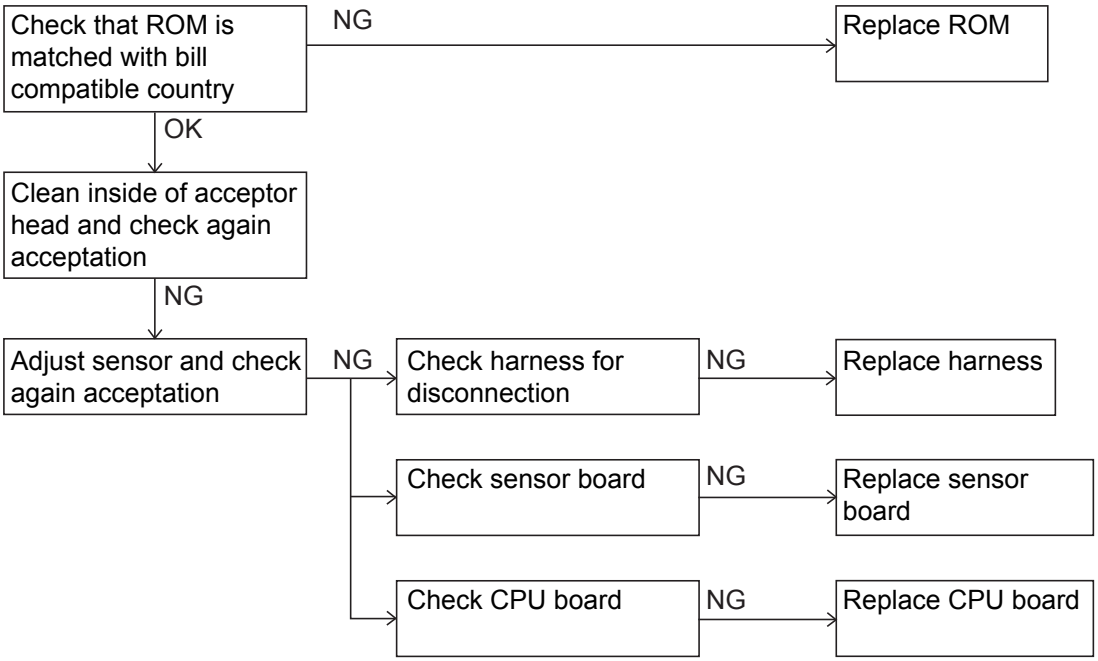

(4) Bills are transferred not smoothly

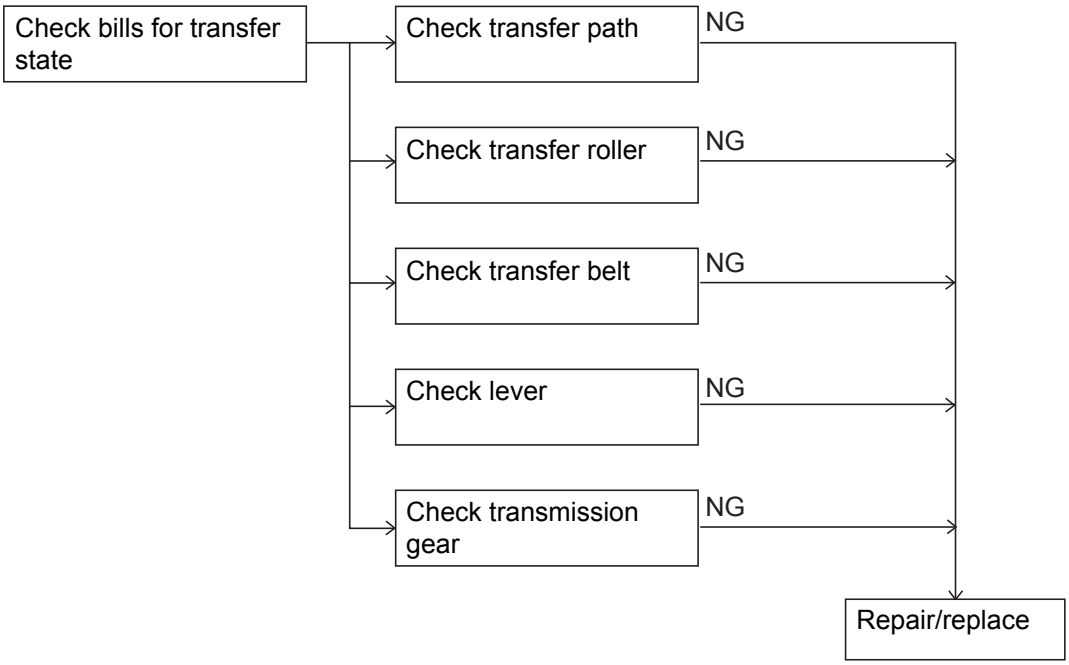

WORLD BILL ACCEPTOR

WBA-12-SS
WBA-13-SS
WBA-22-SS
WBA-23-SS
WBA-24-SS2
WBA-25-SS2

CHAPTER 7

Calibration
Downloading to Flash Memory

Date: July 2007

JCM GLOBAL JAPAN CASHMACHINE CO., LTD.

Contents

1. Description - calibration

Calibration sets a starting reference point for all the optical and magnetic sensors within the unit. This task can be done at the host unit or at your workbench.

WHEN TO CALIBRATE

- After the acceptor component has been disassembled for repair
- After a sensor board has been replaced
- Whenever bill acceptance is degraded
- Once a year

2. Tools needed

You will need the following tools to calibrate your WBA.

Tools needed to calibrate your WBA

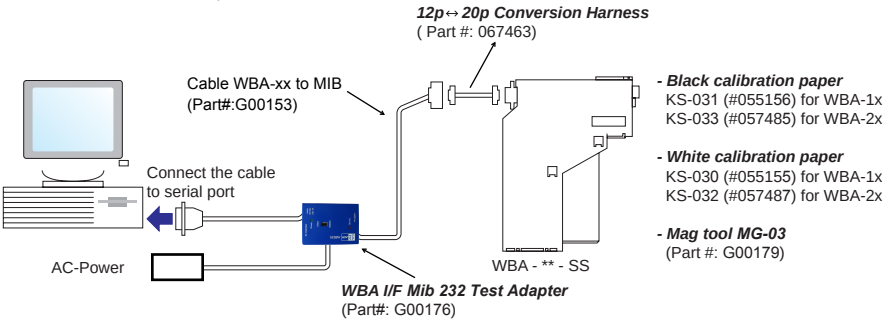

PC: IBM PC AT or compatible
OS: MS-DOS V5.x/6.x or Windows 98/2000/XP

3. Enable Calibration Mode

(1) Refer to the diagram above to properly connect the cables / harnesses.

Make sure the power of host machine is OFF when connecting the harness to the WBA. Failure to do so may cause electric shock and/or permanent damage to the equipment.

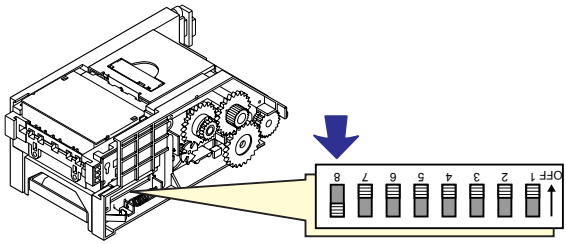

(2) Set DIP switch No.8 ON and 1 to 7 OFF.
(3) Supply power to the WBA.
(4) The indicator LED flashes approximately every second.
(5) Set DIP switch No.8 OFF. Confirm the indicator LED turns off.

4. When using MS-DOS Calibration Program (ADJX0.exe)

There are 2 ways to start the WBA MS-DOS calibration software:

A) Start from MS-DOS

1) Turn on the PC and start MS-DOS. See your PC and MS-DOS manuals to find out how to start MS-DOS.
2) Insert the floppy disk containing the calibration program to the PC's floppy drive.
3) Change the current drive to the drive in which you have inserted the floppy disk (if it is A drive, enter A:).
4) To start calibration of WBA-12/13, enter "ADJ10" and press [ENTER].
   To start calibration of WBA-22/23/24/25, enter "ADJ20" and press [ENTER].

B) Start by double-clicking the calibration program *(Use at own risk)*

1) Turn on the PC and start Windows 98/2000/Me/XP.
2) Insert the floppy disk containing the calibration program to the PC's floppy drive.
3) Double-click the file to start the program ("ADJ10" for WBA-12/13, "ADJ20" for WBA-22/23/24/25).

5. MS-DOS Calibration procedure

(1) When the calibration program starts, screen 1 appears. Check the software name, type, and version number. To end the software without making calibration, press [ESC].

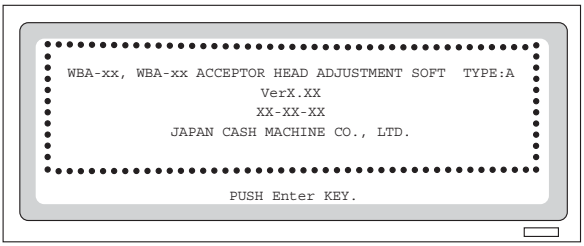

<scr 1>

(2) Press the [ENTER] key. Screen 2 appears.

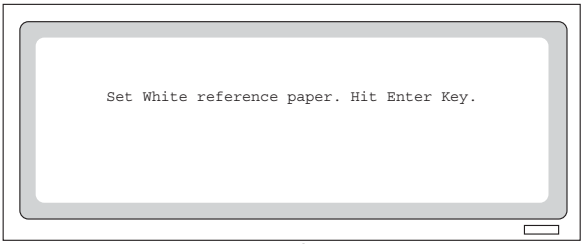

<scr 2>

(3) Insert the white calibration paper ("KS-030" for WBA-12/13 and "KS-032" for WBA-22/23/24/25) as shown below, and close the acceptor head. Make sure that the tabs on both side of the acceptor head are firmly locked.

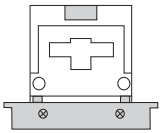

KS-030
(Part#: 055155)

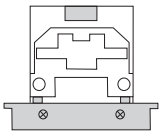

KS-032
(Part #: 057487)

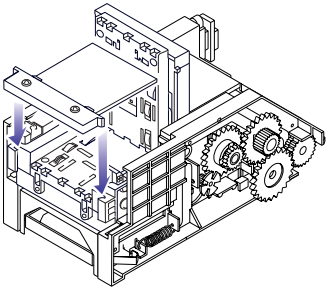

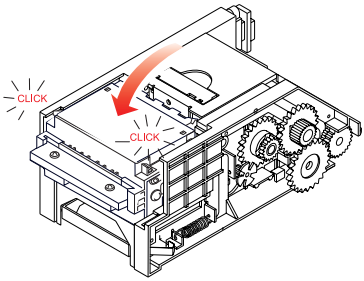

. (4) Press the [ENTER] key to start calibration. Do not move the acceptor head and calibration paper during calibration.

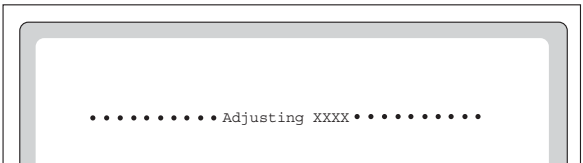

<scr 3>

(5) When screen 4 appears, insert the black calibration paper.

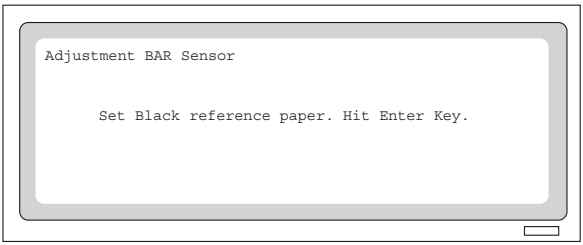

<scr 4>

Close the acceptor head. Make sure that the tabs on both side of the acceptor head are firmly locked.

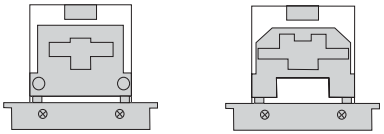

KS-031
(Part #: 055156)

KS-033
(Part #: 057485)

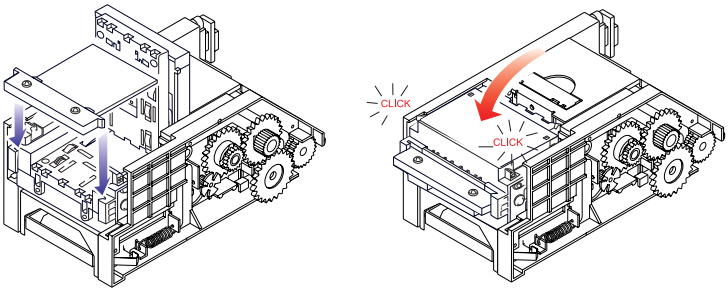

(6) Press the [ENTER] key to start calibration. Do not move the head and calibration paper during calibration.

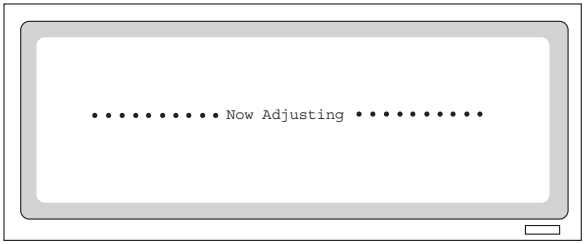

<scr 5>

(7) When screen 6 appears, remove the black reference paper and insert the white calibration paper again and press the [ENTER] key.

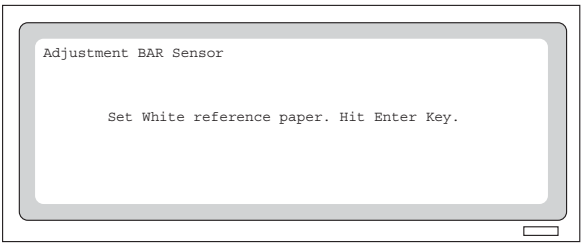

<scr 6>

(8) Press the [ENTER] key to start calibration. Repeat the steps (5) to (8) three to five times until screen 7 appears.

(9) When screen 7 appears, calibration with black and white calibration papers is complete. Remove the calibration paper and close the acceptor head. Make sure that the tabs on both side of the acceptor head are firmly locked.

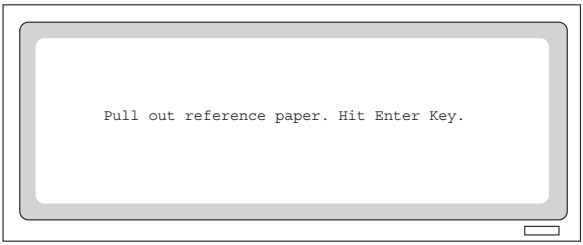

<scr 7>

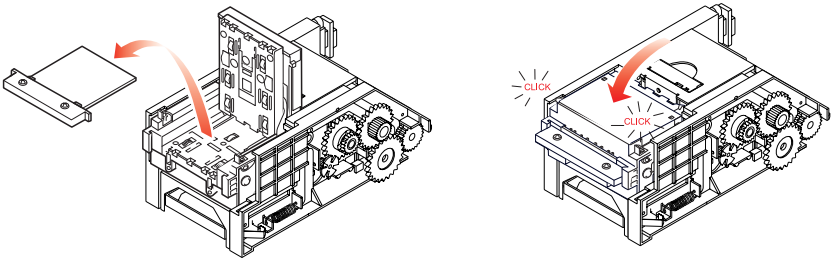

(10) Press the [ENTER] key to start calibration without calibration paper (no paper calibaration).

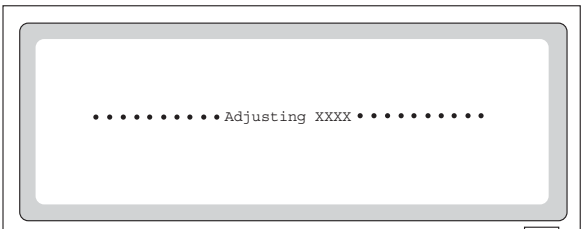

<scr 8>

(11) When the calibration is complete, the screen 9 appears.

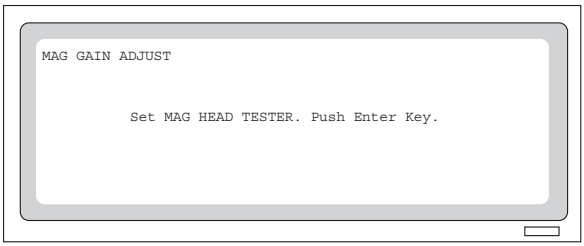

<scr 9>

(12) Calibrate the magnetic sensor(s). Insert the mag head test board to the acceptor and find a location where the second line of mag head test board just above the roller of acceptor head lower tray (show the diagram below). Make sure that the tabs on both side of the acceptor head are firmly locked. ***Closing the acceptor head after the calibration starts results in an error***.

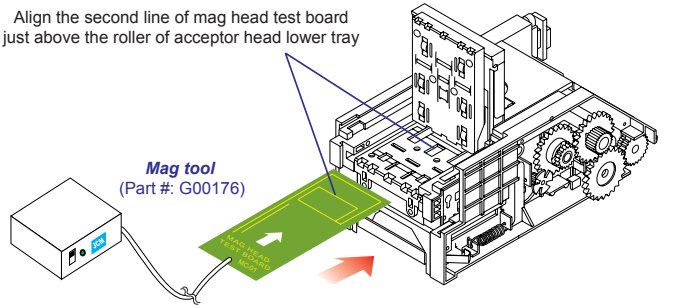

(13) Press the [ENTER] key. Screen 10 appears. (a) shows the current value and (b) shows the peak value detected after the mag board has been inserted.

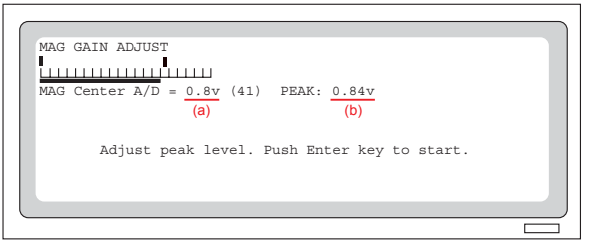

<scr 10>

(14) Slowly move the mal-head test board back and forth to find the peak value. ***The peak value (b) should be between 0.5V and 1.2V.***

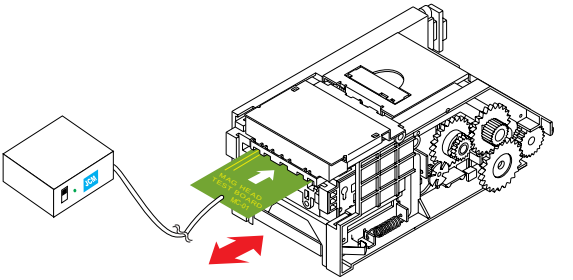

(15) Continue to move slowly the MAG head test board back and forth several millimeters to find the position ***where the "MAG Center A/D" value enters the range within -0.1V in relation to the peak value***.

(16) When the “MAG Center A/D” value enters the designated range, press the [ENTER] key.
The calibration starts and screen 11 appears.

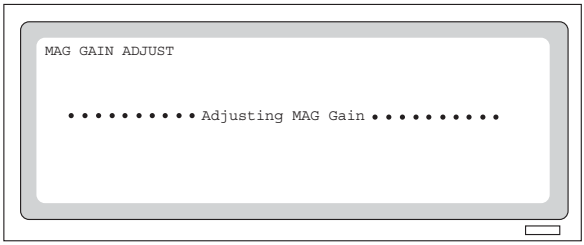

<scr 11>

(17) When the calibration is complete, screen 12 appears. A prompt asks if the calibration results should be written in the acceptor head memory. Press the [Y] key and then [ENTER] to write the data to memory. If you choose [N], all the calibration data will be lost when the power turns off.

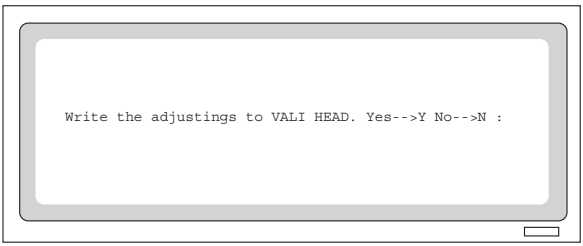

<scr 12>

(18) When the screen 13 appears, all calibration procedures are complete. If you wish to continue calibration with another acceptor head, press [ENTER] and replace with a new acceptor head. To end calibration procedure, press [ESC].

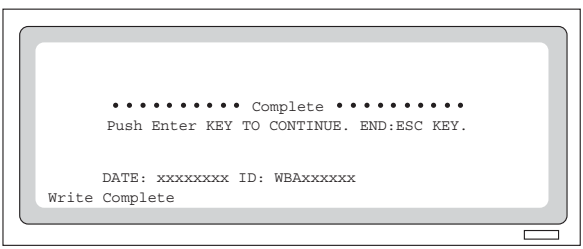

<scr 13>

6. When using Windows Calibration Program (AdjMenu(V***).exe

(1) Confirm that all the following programs are in the same folder.

- AdjMenu(V***).exe (Ver1.01 or higher)
- Adj10win_e.exe
- Adj20win_e.exe
- WBANO.DAT *1

*1 If there is no WBANO.DAT, open a text file (.txt) and save the file name as WBANO and the file expansion as .DAT.

(2) Double click the AdjMenu(V***).exe and then the following window will appear.

(3) Push the [WBA-10] or [WBA-20] button depending on your WBA type.

7. Calibration Procedure for Windows

(1) When pushing the [WBA-10] or [WBA-20] button, the following window will appear. The WBA-20 Calibration screens are used in the following steps as an example.

(2) Push the [SETUP] button to set the COM Port No. connecting with your WBA.

(3) Select the COM Port No. from the pull-down menu.

(4) Push the [START] button to start calibration and then following message window will appear.

(5) Confirm the acceptor head is installed and then push [OK] button. Then the following message window will appear.

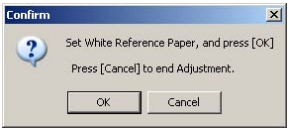

(6) Set the white reference paper (KS-030 for WBA-1X, KS-032 for WBA-2X) as shown below and then close the acceptor head lid close firmly.

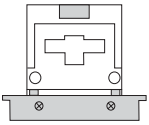

KS-030
(Part#: 055155)

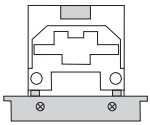

KS-032
(Part #: 057487)

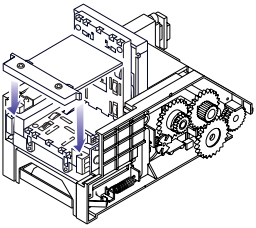

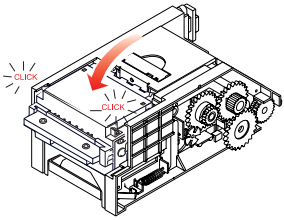

(7) Push the [OK] button of the message window to start the white paper calibration.

(8) Then the following window will appear and the white paper calibration will start.

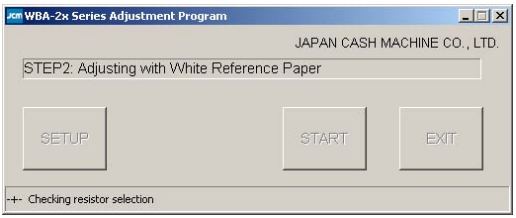

(9) When complete the white paper calibration, the following message window will appear.

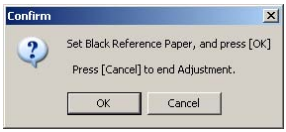

(10) Set the black calibration paper (KS-31 for WBA-1X, KS-33 for WBA-2X) as shown below and then close the acceptor head lid firmly.

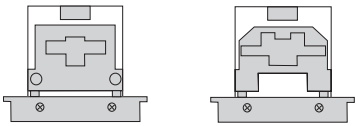

KS-031
(Part #: 055156)

KS-033
(Part #: 057485)

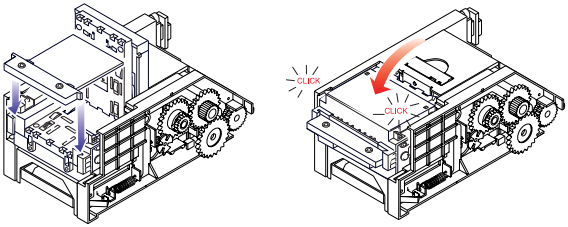

(11) Then push the [OK] button of the message window to start the black paper calibration.

(12) Then the following window will appear and the black paper calibration will start.

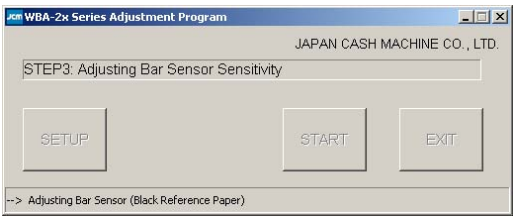

(13) Repeat the steps (5) to (9) several times and then the following message window will appear.

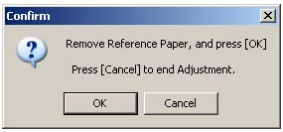

(14) Remove the calibration paper and then push the [OK] button.

(15) The following window will appear and no paper calibration will start.

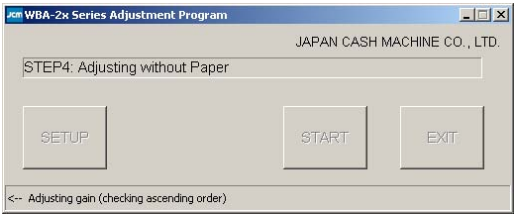

(16) When complete the no paper calibration, then the following message window will appear.

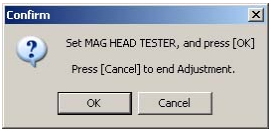

(17) Set the MAG head test board of MAG HEAD TESTER as shown below and close the acceptor head lid firmly.

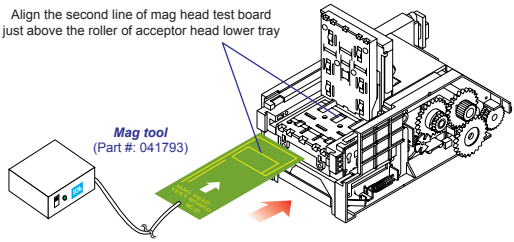

(18) Then push the [OK] button of the message window to start the mag sensor calibration.

(19) When the following window appear, move the mag head board back and forth to find the peak value. The peak value should be between 0.5V and 1.2V.

(20) Continue to move the mag head board slowly back and forth to find the MAG LEVEL position where it is within -0.1V of the peak value. For example, if the peek level is 0.65V, find the position of the MAG LEVEL is between 0.55 to 0.65V

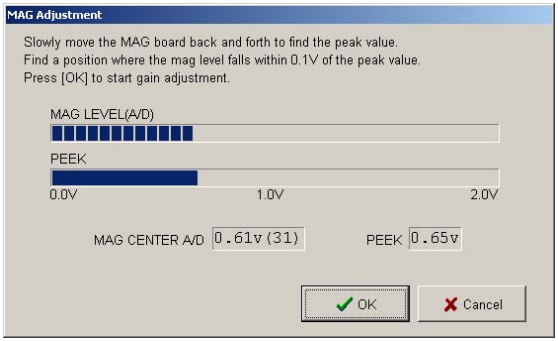

(21) When the values are fixed, push [OK] button to start the MAG sensor calibration.

(22) When the MAG calibration is completed, the following message window will appear.

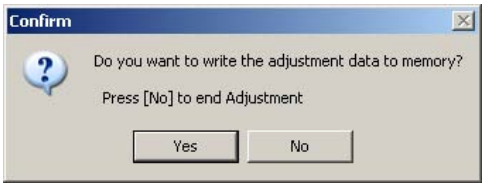

(23) Push the [YES] button to write the calibration data to the WBA memory.

(24) Then the following message window will appear and then push the [OK] button.

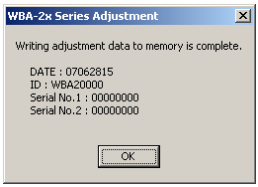

(25) The following message window will appear and push the [OK] button.

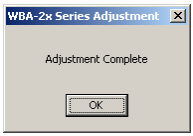

(26) This is the end of the calibration. Push the [Exit] button to close the calibration program.

8. Error Messages

xxxxx Communication Error xxxxx: Communication with WBA has failed.

=> Check all the connections. Make sure you have executed the correct calibration program.

xxxxx Adjustment Error (Gain) xxxxx: Gain calibration error

=> Make sure you have correctly inserted white calibration paper as instructed by the monitor.

xxxxx Adjustment Error (Black Level) xxxxx: Black level calibration error

=> Make sure you have correctly inserted black calibration paper as instructed by the monitor.

xxxxx Adjustment Error (No paper) xxxxx: No paper level calibration error

=> Make sure you have removed calibration paper.

xxxxx Adjustment Error (MAG) xxxxx: Magnetic head calibration error

=> Make sure you have correctly inserted mag head test board as instructed by the monitor.

When an calibration error occurs, the sensor signal name and signal value involved in the calibration error will be displayed on the line above the message “xxxxx Adjustment Error (XXXX) xxxxx.”

Example of error message:

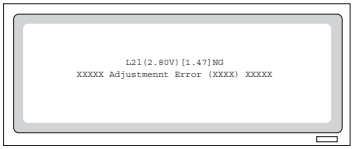

9. Sensor Signal Name and Sensor Name Conversion Table

Sensor signal name	Sensor name
C2I	HPC,LEC
R2I	HPR,LER
L2I	HPL,LEL
C2R	HPC,LEC
R2R	HPR,LER
L2R	HPL,LEL
A	PT1,LE1
B	PT2,LE2
BUR	HBAR
CDR	HPC
RDR	HPR
LDR	HPL

WBA-1 * -SS

Sensor signal name	Sensor name
C2I C2R	UHPC, DHPC
CUI CUR	UHPC
CDI CDR	DHPC
R2I R2R	UHPR, DHPR
RUI RUR	UHPR
RDI RDR	DHPR
L2I L2R	UHPL, DHPL
LUI LUR	UHPL
LDI LDR	DHPL
R2E	PT1
L2E	PT2
R2A	PT3
L2A	PT4
BUR	HBAR

WBA-2 * -SS

10. Description - donwloading to flash memory

This section describes how to download software program to the Flash ROM of the CPU board.

WHEN TO DOWNLOAD

- Software Upgrade
- After a CPU board has been replaced

****This paragraph describes the method of using WBA I/F test bench. For the method 2), see a separate instruction manual of DT-004.***
****This paragraph is for Flash Rom models only (WBA-12/22/24).***

11. Tools needed

Tools needed for downloading

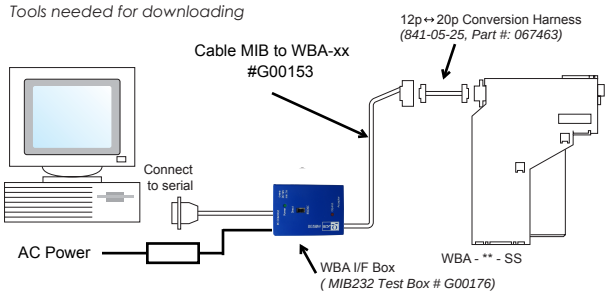

PC: IBM PC/AT and compatibles
The PC must have 1 or more RS-232C communication ports (D-sub pin).

Communication port address: 3F8 to 3FF (serial port 1)
2F8 to 2FF (serial port 2)
OS: MS-DOS Version 5.x/6.x or Windows98/2000/XP.

12. Enable WBA Download Mode

(1) Refer to the diagram above to properly connect the cables / harnesses.

Make sure the power of PS15-006 / host machine is OFF when connecting the harness to the WBA.
Failure to do so may cause electric shock and/or permanent damage to the device.

Location of DIP switches

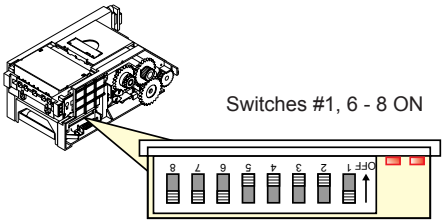

(2) Set the CPU board DIP switches 8, 7, 6 and 1 ON and switches 5 to 2 OFF. This way the baud rate is set to 38400bps. Note the baud rate of 38400bps is available for 4M Flash Rom only (WBA12/22/24).
(3) Supply power to the unit.
(4) The CPU board LED 1 and LED 2 flash alternately and the forced download mode starts.
(5) Save the download program (DWN.exe) and the software into a floppy drive (or the same directory).

13. When using MS-DOS Download Program (DWN.exe)

There are 2 ways to start the WBA download program from MS-DOS. For downloading from Windows, refer to 1

A) Start from MS-DOS

1) Turn on the PC.
2) Insert the floppy disk containing the download program (DWN.exe) and the software to the PC's floppy drive.
3) Start MS-DOS. See your PC and MS-DOS manuals to find out how to start MS-DOS.
4) When the MS-DOS menu appears, type "A" and press [ENTER] (when your floppy disk is in "A" drive).
5) Type "DIR" and press [ENTER]. The list of file names in the floppy disk appears.
6) Find the file name of software and enter the parameters as shown in the diagram below. For example, if the file name is 2420710.USA, and the serial port number is 1, type as:
DWN 2420710.USA 2 252 246 1 [ENTER]

B) Start from Windows98 MS-DOS Prompt or Windows 2000/Me/XP Command Prompt Menu
(Use at own risk)

1) Turn on the PC and start Windows 98/2000/Me/XP.
2) Insert the floppy disk containing the download program (DWN.exe) and software to the PC's floppy drive.
3) Start MS-DOS Prompt or Command Prompt from START menu of Windows.
4) When the MS-DOS/Command Prompt menu appears, type "A:" and press [ENTER] (when your floppy disk is in A drive).
5) Type "DIR" and press [ENTER]. The list of file names in the floppy disk appears.

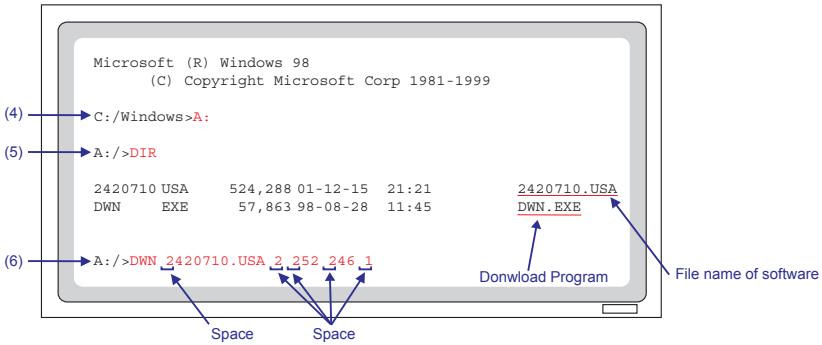

14. MS-DOS Download procedure

Find the file name of software and enter parameters as shown in the diagram below. For example, if the file name is 2420710.USA, and the serial port number is 1, type as:

DWN 2420710.USA 2 252 246 1 [ENTER]

Explanation of Parameters: **DWN File name [baud rate] [address] [size] [port] [ENTER]**

File name	Download file name.	(Must be specified.)
[baud rate]	Baud rate 0: 9600bps, 1:19200bps, 2: 38400bps	Default: 0
[address]	Fixed at 252 (FC hex.).	Default: 252
[size]	Fixed at 246.	Default: 246
[port]	Serial port number	Default: 2

Execution Screen

When the program starts, the following screen appears.

Note: If the download file is correct, “DWLD01” appears on the top line.

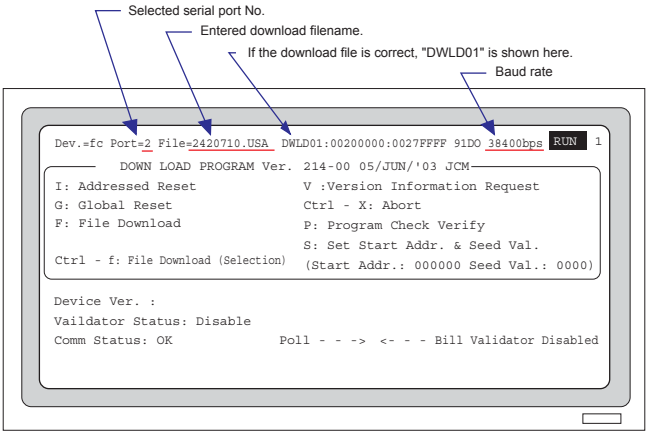

Operation:

Use the letter keys to enter a command.

I: Addressed Reset - Reset a selected unit in the game machine.
V: Version Information Request - Reads the program version after downloading is complete.
G: Global Reset - Reset all the units (including WBA) connected to the host controller
Ctrl + X: Abort - Exit the program.
F: File Download - Downloads the specified file.
P: Program Check Verify - Check CRC by the WBA itself.
Ctrl + F: File Download (Selection) - *DO NOT USE THIS COMMAND*
S: Set Start Addr. & Seed Val. - The start address and initial value of CRC when checking CRC.

(1) Press F key (capital letter) to start the download program.

(2) Downloading starts. The LEDs 1 and 2 on the CPU board flashes alternatively.

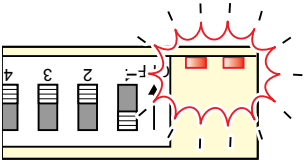

(3) When the downloading is completed successfully, LED1 and LED2 flash in unison.

(4) "CRC" appears on the monitor.

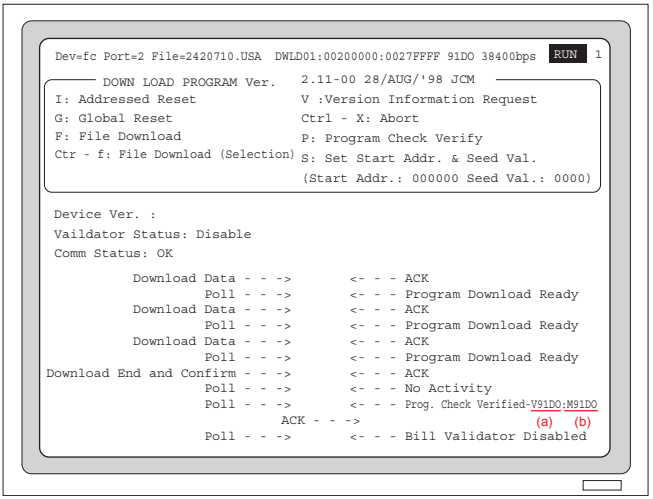

(a) V * * * : CRC value calculated by WBA
(b) M * * * : CRC value calculated by PC

If the downloading is completed successfully, the CRC* values of (a) and (b) should be the same.

(5) The downloading is complete. Press the "Shift" V key to verify the update if necessary.

(6) Exit the program (Ctrl - X).

Reference: "CRC" is an error correction method for checking whether or not data is correctly transmitted.

15. When using Windows Download Program (DOWNLOAD(V1.2*).exe)

(1) Copy the Download Program Ver. 1.2*.exe and wba_download_config.txt to your PC.

(2) When double clicking the DOWNLOAD(V1.2*).exe and then the following window will appear.

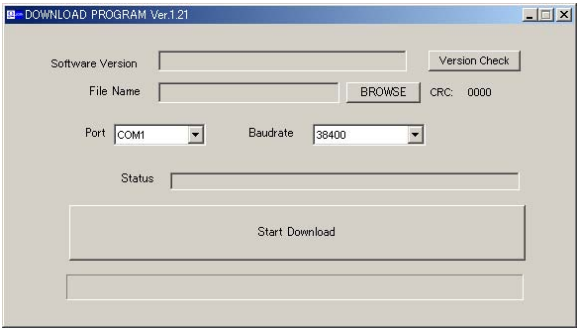

(3) Push the [Version Check] button and confirm the current software version of your WBA.

(4) Push the [BROWSE] button to select new software you want to download to your WBA.

(5) Confirm the COM port number of you PC which WBA is connecting and select the comport number from the pull-down menu.

(6) Select the baud rate 38400 from the pull-down menu.

(7) Push the [Start Download] button to start downloading.

(8) When the downloading is completed successfully, the following message window will appear.

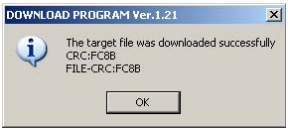

(9) Push the [OK] button and exit the download program.

13. Setting the WBA DIP Switches

1. Test Mode

Selecting the test mode

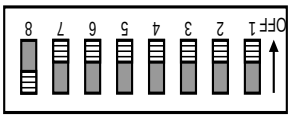

1. Set DIP switch 8 to ON and switches 1 to 7 to OFF.
2. The indicator LED will flash.
3. Set DIP switches to the test mode setting you want to execute.
4. Set DIP switch 8 to OFF.
5. The test mode starts.

Setting the test mode.

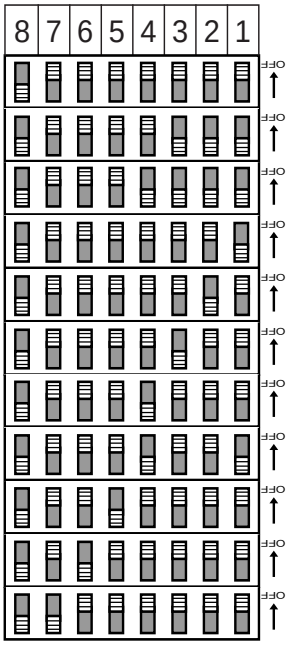

Online test

Transport unit/acceptor head bill acceptance operation test (See Error Code Table 1 and 3.)

Bill acceptance test of unit with cash box (See Error Code Table 1 and 3.)

Transport motor forward rotation test

Transport motor reverse rotation test

Stacker up/down test

Acceptor head/stacker test (See Error Code Table 2.)

Stacker test (without acceptor head)

Solenoid test

Acceptor head sensor test (PH06)
See “Details about the Acceptor Sensor Test (PH06).”
Stacker sensor test (PH07)
See “Details about the Stacker Sensor Test (PH07).”

Details about the Acceptor Sensor Test (PH06)

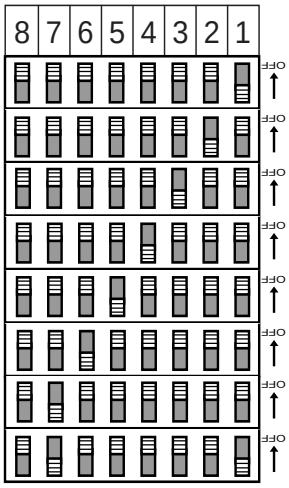

WBA-10	WBA-20
PLEV	FLEV
Reserved	PT3
PT1	PT4
PT2	PT1
HPL	PT2
HPR	UHPL,DHPL
HPC	UHPR,DHPR
Reserved	UHPC,DHPC

Details about the Stacker Sensor Test (PH07)

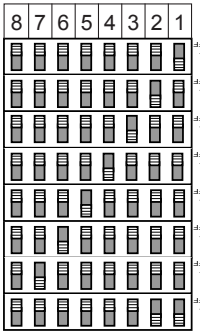

Feed in sensor
Solenoid lever
Feed out
Stacker home
No cassette
Validator encoder
Stacker encoder
Acceptor head detached signal

DIP switch input test

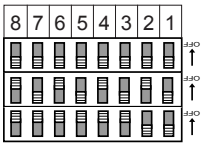

1
2
3

Change the DIP switch settings in the order of 1, 2, and 3.
If the test is successful, the LED turns ON.

Serial port loopback test

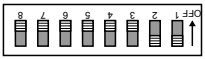

If the test is successfull, the LED lights up.

2. Download Mode

Forced download mode

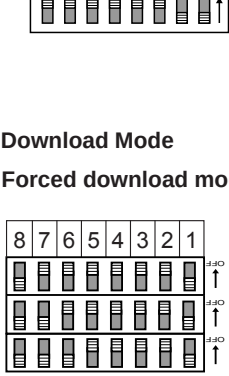

(baud rate 9600bps: for WBA10/20 only)
(baud rate 19200bps: for WBA10/12/20/22/24)
(baud rate 38400bps: for WBA12/22/24 only)

17. Error Code

Error Code Table 1

Error Code Table 1 summarizes the error codes of the receiving operations of the transfer unit/acceptor headpiece and the unit with cash box.

No. of indicator LED flashes	Description
1	Cash box full
2	Stacker jam, or pusher unit problem.
3	Transport cover is open, or stacker lever problem.
4	Jam in the acceptor head.
5	The acceptor head is detached or it has been calibrated, or wrong acceptor head type.
6	Transport motor problem. The pulse signal is not sent from the encoder sesor.
7	Reserved.
8	Stacker lever problem.
9	Reserved.
10	No cash box.
11	Reserved.
12	Reserved.

Error Code Table 2

Acceptor head and stacker test.

No. of indicator LED flashes	Description
1	Reserved.
2	Stacker lever problem.
3	Jam in the acceptor head.
4	Cash box jam.
5	Cash box full.
6	Pusher mechanism problem.
7	The acceptor head is detached or it has not been calibrated, or wrong acceptor head type

Error Code Table 3

Return code.

Number of pulses	Reason for return
1	Crooked insertion
2	Magnetic pattern error
3	A sensor other than DT1, PT2 detected a bill while the acceptor was on standby.
4	The dark-light ratio of the bill is below the fixed value
5	(1) The *HPC sensor did not detect the bill within the specified period after it was initially taken in. (2) The *HPL *HPR, did not delect the bill within the specified period after it was initially taken in. (3) The feed sensor did not detect the bill within the specified period after it was initially taken in.
6	Reserved
7	Error in a photosensor
8	Level error; the bill is unusually dirty. Two overlapping bills were detected.
9	Returned an illegal bill type.
10	Reserved
11	Stacker lever trouble.
12	None of the *HPR, *HPC, nor *HPL detected a bill when the type of bill signal is output. The feed-in sensor stops detecting a bill before the *HPC sensor during transfer of bill to cash box. The HPC sensor detected a bill again during transfer of bill to cash box.
13	Bill length error.
14	Color pattern error.

18. Sensor, Board, and Motor Locations