July, 2001

Inside This Month's Slot Tech Magazine

This month's Slot Tech Magazine features so much of interest that I don't have room to describe it all here. If there is a theme to this month's edition, I suppose it's electrolytic capacitors. Any electronic technician that's worth his salt knows that these puppies fail a lot. Heck, they're "job security" for techs that work on stuff like monitors and power supplies.

For those who are completely unfamiliar with them, there's an introduction to electrolytic capacitors beginning on page 4. In the following article, electrolytic capacitors are explored in greater depth with a look at a unique and often overlooked property of electrolytic capacitors known as ESR. There is a cool unit for measuring ESR and testing capacitors in-circuit as well. It's called the capacitor wizard and I can personally attest to the fact that it really works. Read all about it starting on page 8. Slot Tech columnist Chris Hunt follows up with a look at some common monitor failures, many of which are caused by (you guessed it) bad electrolytic capacitors.

It's the summer lightning season. While it's fun to watch nature's light show, millions of volts of electrical discharge gives us millions of reasons to consider some sort of protection for our computers, office equipment and, of course, our slot machines. Read all about it in "Lightning Strikes - But you can strike back" beginning on page 18.

Just about everyone in the gaming industry knows Si Redd. Heck, just about everyone loves the guy; me included! Si has always had a hands-on approach to the gaming industry, so I thought I'd drop by his home (he lives near me in San Diego) and hand-deliver a copy of Slot Tech Magazine to him. I took the opportunity to chat with him a bit about service as well. This is not an in-depth interview. That's been done. Si's life and career has been celebrated in print on numerous occasions. This is just a chat with an old (Really old. The guy's almost 90!) friend.

Back for a third installment (and he promises a fourth! I never knew there was so much to say about hoppers!) Frank Sutter shows us even more about service on these units starting on page 30

For many years, I worked for a company that had one irrevocable condition of employment. If you lost your game keys, you lost your job. It was as simple as that. No second chances. It was posted in big signs all over the shop - LOSE YOUR KEYS/LOSE YOUR JOB. There was a sign over the time clock. There was a sign at the parts window. There was a sign over the urinal in the men's room.

Randy Fromm

This employer knew that loss of a single master key meant a guaranteed thousands of dollars spent in purchasing new locks and the same spent in labor changing the locks themselves. There was also the potential for tens of thousands of dollars lost if the bad guys got to the games before we could.

While the problems caused by a lost key cannot be eliminated completely, the impact can be mitigated by something known as a "removable core cam lock." As the name implies, just the core can be replaced, lowering the replacement cost and speeding up the time required for replacement. Read about it starting on page 34.

As you read through this month's magazine, ask yourself "Do I have something to share with my fellow slot techs?" Slot Tech Magazine is always looking for contributing writers. For writer's guidelines, visit the website at slot-techs.com.

Your knowledge can help others to improve the quality of their professional careers as a slot techs and the quality of their lives. Sir Francis Bacon (16th - 17th century English philosopher) said, "Knowledge is power." Keeping it to yourself empowers no one. **Share the knowledge. Share the power.**

Until next month, see you at the casino.

Randy Fromm

Randy Fromm

Randy Fromm's
Slot Tech Magazine

Editor
Randy Fromm
Technical Writers
Pete Bachran
Frank Durso
Bart Holden
Jon Hughes
Chris Hunt
Kinger!
Scott Reynolds
Frank Sutter
Michael Thomas
Advertising Manager
Dennis Sable

Slot Tech Magazine is published monthly by
Slot Tech Magazine
1944 Falmouth Dr.
El Cajon, CA 92020-2827
tel.619.593.6131
fax.619.593.6132
e-mail
editor@slot-techs.com
Visit the website at
slot-techs.com

SUBSCRIPTIONS
Domestic (USA)
1 year - $60.00
2 years - $120.00
International
1 year - $120.00
2 years - $240.00

MEI Bill Acceptor

ZT Series 1000

ZT 1200

HIGH, FOUR-WAY ACCEPTANCE

Satisfy customers by accepting bills of all conditions. Bills can be fed in any direction, face up or down.

EXCEPTIONAL SECURITY

Through the use of multiple wavelength optical sensing and sophisticated data processing the ZT Series 1000 bill acceptor sets the standard for rejecting invalid bills. Optical cross-channel sensors examine the bill path for foreign objects such as clear tape or strings. The LRC triggers an automatic "lock out" when separated from the unit for added security.

EASY TO USE

The Recognition and Transport Unit (RTU) and the Lockable Removable Cassette (LRC) can be removed from the front with one hand. The RTU fully opens for cleaning and electrically connects automatically when inserted.

An easily accessible toggle switch enables the operational mode to be changed to "test" or "set-up" mode.

BAR CODE CAPABILITY

Reliably accepts industry standard bar code coupons face up in both directions.

FUTURE FLEXIBILITY IN A FLASH

All US models accept $1, $2, $5, $10, $20, $50 and $100 bills. The ZT Series 1000 bill acceptor can be easily updated electronically to handle new currency designs.

RELIABLE / LOW MAINTENANCE

With the streamlined recognition system, sensors are embedded under the smooth plastic bill path and the magnetic head and pinch roller have been eliminated to dramatically reduce jams, debris buildup and the need for cleaning.

MEI®

Introduction to Electrolytic Capacitors

We use a lot of electrolytic capacitors in our industry. Video slot machine monitors and power supplies use a lot of them. Very often, the difference between a monitor that looks dim, shrunken and distorted and one that is bright and beautiful is nothing but the replacement of a handful of electrolytic capacitors.

So what the heck is an electrolytic capacitor and what does it do? Well, the first part of that question is easy to answer; the second part is a little tougher. Fortunately, you don't have to know exactly how electrolytic capacitors work in order to troubleshoot and test them. . . Read on!

The Land of Beer and Capacitors

The first electrolytic capacitor was manufactured in Germany around one hundred years ago. In the 1920's, engineers were looking for a way to eliminate the bulky and heavy 90 volt batteries that were needed to operate the vacuum tubes in radio receivers. The result was the development of "battery eliminators" which required the use of electrolytic capacitors as the filter elements. Of course, we now know these units as "power supplies."

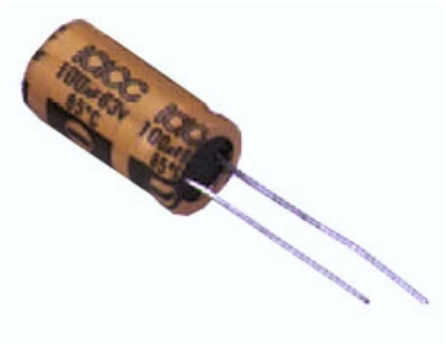

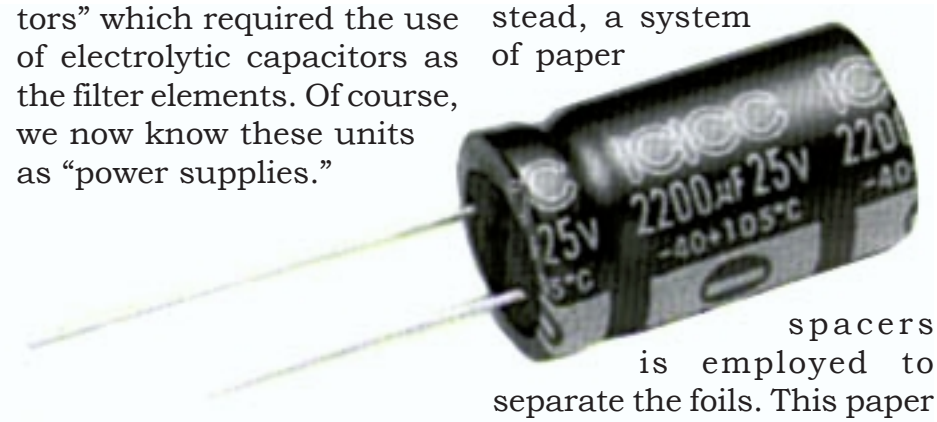

Early electrolytic capacitors were "wet" types which used a liquid electrolyte much as today's automobile batteries do. Naturally, these capacitors had to be mounted vertically to prevent the electrolyte from spilling all over the place. The "dry" electrolytic capacitor first appeared around 1928, making it possible to mount the capacitor on it's side or even upside down.

Today's electrolytic capacitors are made of paper and a couple of strips of aluminum foil. On one of the foil strips, a very thin film of aluminum oxide is created through an electrochemical process. The foil strip becomes the positive lead or "anode" while the aluminum oxide forms an insulating boundary know as the "dielectric" of the capacitor. The second strip of aluminum is used as the negative lead or "cathode" connection. But placing the cathode foil directly against the thin dielectric would puncture it, causing a short circuit. Instead, a system of paper spacers is employed to separate the foils. This paper is soaked in a highly conductive electrolyte solution (hence the name "electrolytic" capacitor.) This assures intimate contact with the dielectric and the cathode foil. In fact, the cathode foil serves only as the electrical connection to the electrolyte-soaked paper which is actually the true cathode of the capacitor.

Electrolytic capacitors are virtually guaranteed to fail eventually. The main cause of this failure is that the electrolyte inside the capacitor will inevitably dry out.

Although today's electrolytic capacitors follow the same basic design as the earliest

units, the past fifteen years have brought about many improvements. Have you noticed how capacitors have gotten a lot smaller lately? It's really pretty amazing. Modern electrolytic capacitors can pack a lot more capacitance in smaller packages due to improved etching techniques. Better seals have improved the life expectancy as well. Unfortunately, no capacitor seal is perfect.

Capacitor Failures

Most electronic components have a practically infinite life expectancy. For example, the mean time between failures (MTBF) for a passive component like a resistor or even active components such as diodes and transistors can easily approach or even exceed 100,000 hours.

But electrolytic capacitors are another story altogether. Electrolytic capacitors are virtually guaranteed to fail eventually. The main cause of this failure is that the electrolyte inside the capacitor will inevitably dry out. The result is a decrease in capacitance. For example, a 3300 microfarad capacitor will, over time, decrease in value to 2000 microfarads, then 1000 microfarads and so on. In fact, it's not unusual for an electrolytic capacitor to open circuit completely.

The point at which a reduction in capacitance causes a malfunction depends on where the capacitor is being used. Some circuits (such as linear power supply filter capacitors) can tolerate a great loss of capacitance without an apparent failure. In other circuits, a small reduction in capacitance will show up right away. Monitors are a good example of this as electrolytic capacitor failures can cause a distorted picture, brightness problems or even complete shutdown. By the way, short circuits in electrolytic capacitors are rare.

The life expectancy of electrolytic capacitors varies quite a bit. There are a number of variables. One is the manufactured quality of capacitor itself. For example, one major capacitor manufacturer offers four grades of components: a "commercial" grade that has a normal life expectancy of 3-5 years, a "computer" grade with a life ex-

pectancy of 5-10 years, a "long life" grade with a life of 10-20 years and a "premium" grade that also has a life span of 10-20 years as well as a wider range of operating temperatures.

And speaking of temperature, this is one factor that has an enormous effect on capacitor longevity. In fact, capacitor life expectancy is doubled for each decrease of 10 degrees Celsius in operating temperature. For example, a capacitor that is operating at room temperature will have a life expectancy that is 64 times longer than the same capacitor operated at 85 degrees! This speaks highly for the installation of cooling fans in power.

Another factor in the life expectancy of electrolytic capacitors is the operating voltage. For example, operating a capacitor at 80% of its rated maximum voltage will reduce the failure rate to 1/3 of that suffered by the same capacitor operated at 100% of the rated maximum voltage. In most cases however, capacitors are rarely operated close to their maximum voltage. An engineer will generally call for a capacitor with a voltage rating that allows a generous margin of safety.

Polarized and Non-Polarized

Electrolytic capacitors can perform a variety of tasks. They are used to filter or tune a signal, block DC or pass AC, couple a signal from one circuit to another, suppress noise or even help start a motor! But it's easiest to think of the electrolytic capacitor as a rechargeable battery; a very short term rechargeable battery that can be charged very quickly (in a fraction of a second.) It will also discharge just as quickly when the circuit requires it to do so.

Like a battery, most electrolytic capacitors are "polarized." That is, they have a positive terminal and a negative terminal. The negative lead is marked on the side of the case. Additionally, on capacitors with radial leads (where the two leads come out the bottom of the capacitor) the positive lead is usually the longer of the two. If you inadvertently install one backwards, it will probably blow up like an M-80 firecracker! Most modern electrolytic capacitors have a safety vent that will open up to release the excess pressure should this occur. The vent is simply a scored area on the top of the aluminum case that allows the case to break open instead of shooting off like a missile.

Some electrolytic capacitors are "non-polarized" or "bi-polar" types. There is no positive or negative lead on these capacitors. They are often identified by the letters "BP" printed on the case. If you need to replace a bi-polar electrolytic capacitor you can make your own from two regular, polarized capacitors. Select two capacitors of the same voltage rating (or higher) and TWICE the capacitance as the bi-polar capacitor you need to replace. Connect them in series with their two negative leads tied together. You will now have a bi-polar capacitor.

Capacitors can also be connected in parallel to increase capacitance. When capacitors are connect in a parallel circuit, their capacitance is added together. If, for example, you needed a 330 microfarad capacitor, you could parallel a 220 microfarad with a 100 microfarad. This would give you a total of 320 microfarads. Since electrolytic capacitors have a fairly wide tolerance, this will give you a good approximation of the 330 microfarad capacitor you need. When capacitors are connected in parallel, their voltage rating is unaffected. If, in the above example, the voltage rating of the 330 microfarad capacitor was 25 volts, both the 100 microfarad and the 220 microfarad capacitors would have to be rated at a minimum of 25 volts. Remember, you can always use a replacement capacitor with a higher voltage rating than the original.

SERVICE/DISTRIBUTION CENTERS

WELLS-GARDNER®
ELECTRONICS CORPORATION

AMA Distributors
1525 Airline Highway
Metaire, La. 70001
Tel: 504-835-3232
Fax: 504-835-9594

C.A.Robinson & Co.
180 Utah Avenue
S. San Francisco, Ca. 94080
Tel: 650-871-4280
Fax: 650-588-8538

Laniel Canada, Inc.
7101 Trans-Canadienne
S.-Laurent, Quebec H4t1a2
Tel: 514-336-5050
Fax: 514-332-1739

Mazzco
500 Eastern Avenue
Bensenville, IL 60106
Tel: 1-800-292-4491
Fax: 1-800-671-2349

New England Coin
232 Vanderbilt Avenue
Norwood, Ma. 02062
Tel: 781-769-9760
Fax: 781-762-8225

RBA Inc.
663 Orly Ave
Dorval, Quebec H9P1G1
CANADA
Tel: 514-336-5403
Fax: 514-733-2377

Lieberman Music Company
9549 Penn Avenue S.
Bloomington, MN 55431
Tel: 612-887-5299
Fax: 612-887-5656

AG&E INC.

AG&E INC. Las Vegas
6255 McLeod Drive
Suite 20
Las Vegas, NV 89120
Tel: 702-798-5752
Fax: 702-798-5762
1-800-727-6807

AG&E INC. Atlantic City
202 West Parkway Drive
Egg Harbor TWP, NJ 08234
Tel: 609-383-9970
Fax: 609-383-9971
1-800-890-9298

AG&E INC. Chicago
2701 N. Kildare Avenue
Chicago, IL 60639
Tel: 888-438-6299
Fax: 815-248-4395
Fax: 773-252-6299
1-888-438-6299

AG&E INC. Reno
280 Greg Street #3
Reno, NV 89502
Tel: 775-786-8112
Fax: 775-786-5446
1-800-722-0635

AG&E INC. Florida
2046 McKinley Street
Hollywood, FL 33020
Tel: 954-922-9952
Fax: 954-922-1855

AG&E INC. California
19020 N. Indian Avenue
Suite 2F North
N. Palm Springs, CA 92258
Tel: 760-251-4967
Fax: 760-251-3827
1-800-352-3837

Seeing is Believing

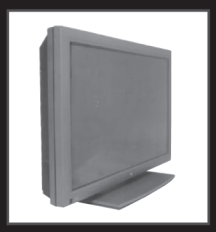

Wells-Gardner is committed to supplying our customers with not only the newest display technology but also the best quality and cost effective solutions for your display and coin door requirements.

Our new and exciting products manufactured today are engineered for the games of tomorrow.

- Digital Control CRT Monitors
- Plasma Displays
- Liquid Crystal Display (LCD) Monitors
- Coin doors, acceptors and accessories
- Twenty World-wide Service Centers

Seeing is believing with products from Wells Gardner!

WELLS-GARDNER®
ELECTRONICS CORPORATION

2701 North Kildare • Chicago, Il. 60639
Phone: 773-252-8220 • Fax: 773-252-8299
Call 1-800-336-6630 or Check our web site : www.wellsgardner.com

Electrolytic Capacitors and ESR

By Randy Fromm

A common thread between power supplies and monitors is capacitor failure. Capacitor failure is so common, I generally travel around the world with a suitcase full of them.

Capacitor failures

In addition to a suitcase full of capacitors, I generally carry a capacitor meter with me as well. Although just about everyone has a digital multimeter that they use for measuring voltages and checking fuses, capacitors cannot be adequately tested with the DMM. Despite the fact that many technicians claim that capacitors can be tested by using the resistance (ohms) setting of the meter and watching the resistance change as the capacitor charges, I have found this test to be extremely misleading. Capacitors that appear to pass the "charge" test have actually been defective.

Some types of capacitor meters use the charge test to measure capacitance. When a capacitor is connected to a voltage source, it does not become fully charged instantaneously, but takes a definite amount of time. The time required for the capacitor to charge is determined by the size or capacity of the capacitor, and the resister in series with the capacitor or its own internal series resistance. This is called the RC time constant. Capacity in farads multiplied by resistance in ohms equals the RC time constant in seconds. The curve of the charge of the capacitor is the RC charge curve.

Re-read the previous paragraph again. Notice the phrase "internal series resistance?" This is one of those important thingies that whiz right by you if you're not careful. Also known as "ESR" (Equivalent Series Resistance), this measurement of a capacitor's "health" is not directly related to a capacitor's "capacitance in microfarads" and may be new to many techs so lets briefly review ESR and its detrimental effects.

Equivalent series resistance: ESR

ESR is the DYNAMIC pure resistance of a capacitor to an AC signal.

High ESR can cause time constant problems, capacitor heating, circuit loading, total circuit failure etc. A switching power supply may not reliably start-or start at all. Slight hum bars appear in the video of a monitor. A display may be pulled in from the sides, top or bottom. These problems and many more are often caused by capacitors with normal capacitance but high ESR!

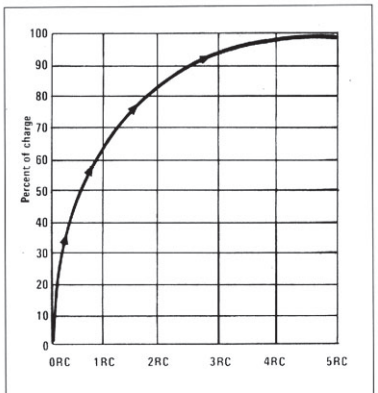

Capacitors follow an RC charge time as they charge to the applied voltage.

All capacitors have a certain amount of ESR. Sources that contribute to ESR include lead resistance, dissipation in the dielectric material, and foil resistance. Small, non-electrolytic capacitors should have extremely small amounts of ESR. An electrolytic capacitor that has excessive ESR will develop internal heat that greatly reduces the life of the capacitor. In addition, ESR changes the impedance of the capacitor in circuit since it has the same effect as adding an external resistor in series with the component.

There's an excellent piece of test equipment that can be used to measure a capacitor's ESR. It's a type of AC ohmmeter called the Capacitor Wizard and can even be used to measure a capacitor's ESR "in-circuit." Other capacitor meters require that the capacitor be pulled from the circuit before testing.

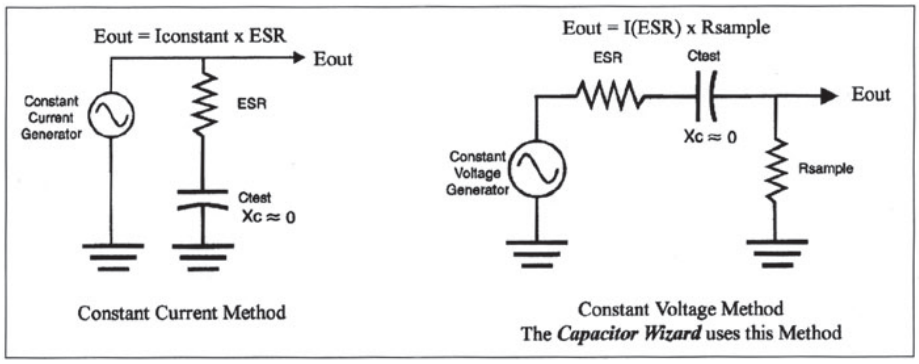

Measuring ESR is often a more accurate test of a capacitor's health than testing its capacitance. However, ESR does not exist as a STATIC quantity, therefore it cannot be measured by a conventional capacitance meter or a DC ohmmeter. ESR exists only when alternating current is applied to a capacitor or when a capacitor's dielectric charge is changing states.

ESR can be considered to be the TOTAL in-phase AC resistance of a capacitor. ESR includes the DC resistance of the leads, DC resistance of the connections to the dielectric, capacitor plate resistance and the in phase AC resistance of the dielectric material at a particular frequency and temperature.

ESR is affected by every capacitor's physical quantity - so any problem with a capacitor (other than a short-circuit, of course) shows up as an increase in ESR! The combination of components that make up ESR are symbolized by a resistor in series with a capacitor. This symbolic resistor does not really exist as a physical entity so direct measurements across the ESR resistor are not possible! However, if a method of correcting for the effects of capacitive reactance is provided, and considering all ESR resistances are In-phase, ESR can be calculated and measured by using the basic electronics formula E = I x R.

If a capacitor has dried out, is open, or otherwise has suffered drastic failure, the measured ESR will be near infinity. If a capacitor has changed capacitance slightly, it has a problem and that problem will show up as a several ohms increase in the ESR. For this reason, a standard capacitance meter that does not measure ESR could lead you to conclude that a bad capacitor is actually good!

I have seen this time and time again and always make a point of mentioning it to my Casino School students. If a regular, hand-held capacitance meter shows the capacitor under test as being just the tiniest bit low (for example, a 470 microfarad capacitor that measures 465 microfarads) it is probably bad. It is not bad because it has lost its microfarads but (probably) because its ESR has increased.

Measuring ESR

How do you tell the good caps from the bad?

Whether the ESR of a particular capacitor is correct or too high can always be determined by comparing the suspicious capacitor to a known good one of the same value, voltage rating, and type. Unfortunately, one doesn't always have another capacitor to compare against. Experience is the best teacher here, however there are some general guidelines:
The higher the rated working voltage, the higher the normal ESR. Capacitors used in Switching Power Supplies should have really LOW ESR less than 1/2 ohm. Non-polarized caps are normally less than 1/2 ohm.

The next logical question about ESR is "How HIGH is TOO HIGH"? That's a judgement call that can only be based on experience or comparison to a known good cap. Over 15 ohms is certainly too high for most applications. Over 3 ohms is too high for Horiz/Vert switching applications. Over 1/2 ohm is too high for power switching applications. By comparison

you will gain experience and know when to be suspicious. These are my opinions. Here are some actual repair situations:

Example: 47uf @50vdc measures 25 ohms ESR in circuit - BAD CAP

The suspect capacitor is a 47uf @50vdc in a switching power supply. The Capacitor Wizard has measured 25 ohms ESR in circuit. That is higher than 15 ohms and much too high for any quality cap. A new capacitor measured 5 ohms ESR. The new capacitor fixed the problem.

Conclusion: This is a higher voltage capacitor and can be expected to normally measure higher than ' ohm. In my judgment any "switch mode" capacitor that measures more than 3 ohms ESR is suspect no matter what the voltage rating, however you may get by with 5 ohms ESR in that particular circuit.

Example: 1000uf measures 1.5 ohms in circuit - BAD CAP

This is a 1000uf cap used in lots of switching power supplies. The Capacitor Wizard measured 1.5 ohms in circuit. Because the capacitor's operating voltage is so low and it's used in a switching power supply, I would expect a normal ESR reading of less than 1/2 ohm. Comparison to a known good cap confirmed it should measure less than 1/2 ohm. Replacing this cap cured the trouble.

Get experience measuring known bad caps. As a new user of the Capacitor Wizard I highly recommend that you test some known bad caps to see how they respond and build your confidence in the instrument. Why you might be saving your bad capacitors I cannot say. I save them for use as examples during my Casino School so I have bags of 'em.

The Capacitor Wizard probes are non-polarized so don't worry about polarity. You will probably have mostly open capacitors and they will barely move the meter. Get a 100 ohm resister and put it in parallel with a bad open cap. Notice that the meter still just barely moves! Try different values of resistance and see how the meter responds. Get a transistor or a diode and try to measure across the junctions. You will notice the Capacitor Wizard does NOT respond. That is because the Capacitor Wizard test signal is only about 5 millivolts. It takes 300 to 600 millivolts to turn on solid state devices. Get a transformer or a choke from a power supply or monitor. Measure across the primary, secondary, or anywhere you like. You will notice that the Capacitor Wizard does not respond. That is because the inductive reactance at the 100 kHz test frequency is many orders of magnitude larger than the resistance range of the Wizard. A high percentage of your bad caps will fall into this category-open. This demonstration proves that open caps are very easy to find in-circuit and the associated circuitry has little effect on the Capacitor Wizard operation in-circuit.

Perhaps not all of your bad caps checked open. Some of the caps probably rang the "Cap Good" beeper (ESR less than .5 ohm). Those caps are more than likely good. Every shop accidentally replaces a good cap now and then. Just to make sure they aren't shorted, check them with a standard ohmmeter. Check them on your standard out of circuit capacitance reading meter. You'll probably find that they are all good.

Locating other bad caps re-

quire a little more experience with the Capacitor Wizard and some knowledge about capacitor types and uses. You may have found caps from one to 30 ohms ESR in your bad box.

Measuring ESR is a very good indicator of capacitor failure. For switch mode circuits, it is the ONLY reliable capacitor test, IN or OUT of circuit! Open caps and caps with really high ESR (over 15 ohms) are easy to find in circuit and need to be replaced. Marginal caps that measure between 1/2 and 15 ohms ESR require some experience with the Capacitor Wizard and/or comparison to a known good cap of the same voltage, value, and type. Caps above an operating voltage of 35vdc have a normally higher ESR (around 1 to 3 ohms) than caps of a lower voltage (less than .5 ohm ESR).

I know of no perfect formula or rule that can always tell normal ESR from marginal ESR other than comparison to a known good part. As a technician, I always follow this rule: "if in doubt, replace". You will eliminate a lot of recalls and cure many weird and undefinable intermittent problems if you follow this rule.

A special thanks to Doug Jones without whom this article would not have been possible.

For more information on the Capacitor Wizard, contact Independence Electronics Inc., 119S Main, Independence, MO 64050; (816)836-1094; fax (816)252-7309; toll-free (800)833-1094.

Slot Tech Magazine's Quick Fixes for Gaming Monitors

TATUNG
(Bally Gamemaker)

Dead Unit (Fuse OK)
Check the following. For capacitors, it is suggested that you replace them (as opposed to simply testing them) as I'll bet that they have a high ESR

C106	100uF@25v	PWM chip reference feed cap. Most common culprit
ZD620	7v Zener Diode	
Q603	2SC4542 (BU508)	Horiz output transistor
Q101	2SK1507	Power supply FET

Horizontal Width Won't Adjust
C19 4.7@50v NON-POLARIZED (High temp +105C) located next to flyback Xfmr

Vertical Problems

C704 & 705	100uF@35v	Lack of Vertical Scan
C714	104pF@100v	Coarse Lines at Top 2'' of Picture
IC701	LA7837 I.C.	Vertical Collapse (Flatline)

CERONIX 1492/2092 (IGT PE+)

Dead Unit or High Voltage Present but no Picture

295	160v Zener Diode	Power supply makes a chirping noise
218	LA7851 I.C.	Vertical output chip. You hear high voltage "fsst" but monitor shuts down again.
268	IRF831 FET	This usually blows the 3A fuse if it goes short circuit
292	1.2 ohm res	Measure carefully. If its above 1.8ohm, the FET will not trigger
130	7812 Regulator	Measure for 12v at the M gain (brightness) control. (HV but no picture)
104	PN2222 xsistor	(HV but no picture)
63/65	PN2222/MPSA64	These control the CRT beam limiter circuit. (HV but no picture)

Color Overdriven on CRT (Overcast)

91(B,G or R)	2SA1370 transistor	These go short causing either a Blue, Red or Green overcast on picture
83(B,G or R)	2SC3467 transistor	These go short causing either a Blue, Red or Green overcast on picture

Color Missing

PRA(x3)	Ceronix Part	The NE222 surface chip will go causing loss of color for that channel

KORTEK KT1703 (IGT Gameking & I Game)

These babies are still relatively new in the field but if you have one that looks like the CRT is on its way out (dull lifeless picture without definition) then get out the soldering iron and your capacitor box and change **ALL** of the following capacitors. There are still a lot of caps on this monitor board but this little family does nasty things. You'll be amazed at the results!

C403 1uf@50v
C407 0.47uF@50v
C408 4.7@50v
C425 1uf@250v
C501 1uF@400
C108 47uF@50v
C126 100uF@35
C128 470uF@25v

Copy this guide and paste it to the wall of the shop!

Jammin' with Chris Hunt

Slot Tech Troubleshooting Tips

Well fellow "techies"... Summer is here and so is the heat. Your air conditioning is going flat out but the casino ambient is still more than you would like it. But apart from creature comforts (what was that brand of deodorant again?) there are other "beings" to think about. Come on, think harder... What generates heat apart from humans, works 24 hours a day and must always look good? No, not your boss in his Armani suit...YES!!!...our old friend the VIDEO MONITOR!!!.

Lets take a moment to consider what's going on in there. Heat (around 120°F) straining high voltage looking to burn something up at a moments notice... and, ELECTROLYTIC CAPACITORS. These should never be forgotten as they play a major part in the operation of the monitor.

Most techs go looking for open/short circuit semiconductors when the monitor finally croaks but lurking in that circuitry is a dried up cap. Oh that heat!! You see, electrolytic caps operate with one very important ingredient... Electrolyte = a liquid. Well, if you spent 24 hours a day in a 120°F environment with only the liquid you had in your body, you would croak too!

So folks, this month I will give you some quick fix tips so you can revive those dead or dying monitors. On the opposite page is a chart that's packed with symptoms and solutions to assist you in your quest. Make a copy and put it up on the wall of the shop.

Until next time, fellow Techies, try not to work too hard out there on the floor. Hey, Summer doesn't stay around that long so try to get some rays and throw a shrimp on the barbie for me. And remember... KEEP ON JAMMIN'

- Chris Hunt
chunt@slot-techs.com

Unlock the Mystery of Monitor Troubleshooting - B+ is the Key Part II

Okay . . . Now that you've located a suit able test point for measuring the B+ power supply voltage, you're ready to make the test. Set your meter to read DC volts, connect the black meter lead to ground and connect the red meter lead to the B+ test point. With the power turned on, you should typically measure something between +88 Volts DC and +136 Volts DC. The voltage will vary somewhat between models and manufacturers but it is generally in this range.

What Does It Mean?

Being able to interpret the B+ reading is the key to troubleshooting monitors. For example, one of the most common of all monitor symptoms is "blank screen." This can be caused by a number of completely different failures in altogether different circuits. However, the B+ measurement will point you in the correct direction.

It's important to note that the two types of power supplies we find in monitors will differ in the symptoms of their failures and/or in their response to the failure of other monitor circuits. As you work on a monitor, be certain to relate your B+ measurement to the proper type of power supply, Linear or SMPS, as outlined in last month's column, part one of this discussion.

In a monitor with a linear power supply, a normal B+ measurement tells you two things. The first is pretty obvious. If the output of the B+ power supply is normal, the power supply is working properly (duh). Whatever it is that's causing the problem in your monitor, it's not the B+ power supply.

The other bit of information you can infer from a normal B+ reading is that the horizontal deflection circuit is working properly. The horizontal deflection circuit is responsible for the vast majority of the power consumed by the monitor. This is because the horizontal deflection circuit not only makes the beam move right and left across the widest part of the CRT but also drives the high voltage unit. The high voltage unit presents the highest load in the monitor because it powers the CRT itself as well as providing low voltage power supplies for the vertical deflection circuit and the video and sync amplifiers. In other words, just about everything else in the monitor is actually powered or driven by the horizontal deflection circuit!

If the horizontal deflection circuit is not operating, you lose the load and the output voltage of the B+ power supply will rise to around +160 to +170 VDC. Therefore, if the B+ is normal, you KNOW that the horizontal deflection circuit is working properly. In fact, if the B+ power supply is normal, you can infer that your high voltage (eht) is working properly as well, even though you haven't made any direct measurements at the second anode of the CRT.

In a monitor with an SMPS, a normal B+ measurement also tells you that the power supply is working properly but you cannot always make the same assumption regarding the horizontal deflection circuit. It really depends on the design of the power supply. While most power supplies will exhibit a higher than normal output voltage with a loss of load, some continue to operate normally regardless of load (or lack thereof).

Likewise, in an SMPS, a higher than normal B+ reading doesn't necessarily indicate a failure in the horizontal deflection circuit. You may have a problem with the power supply itself.

There is a quick way you can

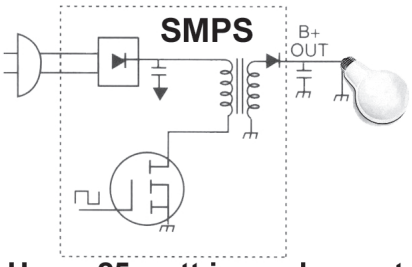

Use a 25 watt incandescent lamp as a dummy load

determine if the power supply is working properly. You can use a "dummy load." Connect an ordinary, household 40-watt incandescent lamp between the B+ output and ground. This will load the power supply. If the output of the power supply now measures normal, your horizontal deflection circuit is inoperative. If the output of the power supply still measures too high, your power supply is bad.

So what might be wrong if the B+ voltage is still too high, even with the dummy load? In most SMPS designs, there is a reference voltage that is derived from a "sense" winding on the power transformer. It usually consists of a simple circuit with a single diode and a small filter capacitor. The capacitor is often in the range of one to one hundred microfarads. When the filter capacitor in this circuit fails, the reference voltage drops. This causes the integrated circuit in the SMPS to increase the pulse width to the MOSFET, boosting up the output voltage to a level that is much higher than normal. In fact, this is just about the only failure that can cause the output of an SMPS to go too high. Naturally, this trips the x-ray protection circuit and causes a high-voltage shutdown in order to prevent excessive radiation.

A higher than normal B+ reading for a linear power supply can likewise be caused by an inoperative horizontal deflection circuit or a power supply fault. You can use the dummy load here as well. If the power supply reads normally with the dummy load connected, the power supply is working properly (again, "duh").

There is another clue that you can use to determine where the problem is in an "over-voltage" condition like this. Listen carefully to the monitor as you turn it on. If you hear a momentary squeal and/or the crackling sound of the static electricity generated by the monitor's high voltage charge on the CRT, the horizontal deflection circuit is functioning properly (even if it's just for a moment) and your power supply is at fault.

In this case, the problem is most likely in the voltage regulator itself (either an IC voltage regulator or a regulator circuit made from discrete components) or a faulty bypass capacitor. In the case of the latter, look for an electrolytic capacitor with a value of 22 to 100 microfarads at 160 volts, connected between the B+ output of the voltage regulator and ground. A typical value here is 47 microfarads.

If a linear B+ power supply reads low, the problem likely lies in the power supply itself. The voltage regulator is probably bad or the main filter capacitor has failed. Regulator failure is hundreds of times more likely than capacitor failure in this regard. However, some linear power supplies have an over-current protection (OCP) design that shuts down the voltage regulator circuit if the load becomes excessive. This commonly occurs when the high

voltage unit (a.k.a. flyback transformer) or horizontal output transistor fails. To verify, power up the monitor with the horizontal output transistor removed. If the B+ pops back up (in fact, it will rise to about +160 to +170 volts DC) then you most likely have a shorted flyback and/or horizontal output transistor. You can verify that the power supply is working properly with the dummy load as before.

All switched-mode power supplies have an OCP circuit that shuts down the power supply if the load becomes excessive. As with the linear power supply, this commonly occurs when the flyback transformer or horizontal output transistor fails. When the B+ measures low or is pulsating at two or three times per second, this is likely the cause. Listen carefully to the power supply. If you hear it "ticking" you have a short somewhere in the horizontal deflection circuit and the problem is not in the power supply itself.

Again, you can remove the horizontal output transistor and use the dummy load to verify that the power supply is good. If the power supply output still measures too low, try changing the electrolytic capacitors. It is not likely that the primary filter capacitor will be bad but any other capacitor is a likely suspect. Always use the highest quality replacement capacitors you can in an SMPS circuit. Use low ESR, 105 degree caps if possible and you will greatly extend the longevity of the monitor.

Complete loss of B+ in a linear power supply is likely to be accompanied by a blown fuse. If this is the case, suspect a shorted horizontal output transistor or other component(s) in the horizontal deflection circuit. It is also possible that you have a shorted bridge rectifier in the power supply itself, though this is far less likely.

Staying with the linear power supply, complete loss of B+ with an intact fuse is definitely a power supply failure. Look for an open resistor with a value of 1.2 to 2.7 ohms. It will likely be a ceramic, wirewound resistor of 5 to 10 watts.

Complete loss of B+ in an SMPS is not likely to be accompanied by a blown fuse. If it is, suspect a bad FET switching transistor or a shorted bridge rectifier in the power supply itself. Some SMPS designs use an IC driver module instead of the FET. Naturally, you would suspect this if the fuse is open.

If the fuse is good but the output of the power supply is zero volts and the horizontal deflection circuit is not shorted anywhere, you have a power supply failure. The most likely culprit here is a bad PWM integrated circuit or one or more of those pesky electrolytic capacitors again. The best technique here is a quick substitution of the suspected components.

Slot Tech's Prayer

The tech manager is my shepherd
I shall not want.
He maketh me to lie down and bolt games.
He leadeth me to broken monitors.
He restoreth my lack of parts.
Ye though I walk through the valley of down games,
I will fear no hopper jams,
For my bag is with me,
my screwdrivers and sockets they comfort me.
Thou preparest a list of zero meters in the
presence of my co-workers.
You fill my bag with parts.
My hoppers overflow.
Surely coin-in jams and bill validator failure
will follow me all the days that I work.
And I will work in the casino of my choice forever.

Amen

Comparitor Repair for Floor Techs

by Pete Bachran

In the shop, usually under the bench or by the back wall, is a large cardboard box filled with not working comparitors. Board techs hate working on them and most floor techs don't know what to do with them so they just sit there. There isn't much written about them and Coin Mech's website isn't geared toward technicians.

As it happens, coin comparitors aren't really that difficult to get working. The information here is specific to the CC-16 model but is easily transferred to CC-33's, CC-62's and most others.

Usually a comparitor is removed from the floor for one of three reasons:
1. Stealing, taking coins without counting them.
2. Accepting incorrect denomination coins.
3. Not accepting anything at all.

Without too much electronic theory most of these comparitors can be repaired pretty quickly and put back into service. So grab a CC-16 and give this a try.

Tools needed:

Screwdriver, Philips
Nylon tech brush
All purpose cleaner

The most common problem with these comparitors is that they get very dirty. They seem to get full of coin dust, spilled drink residue and the remnants of whatever a player could stick down the slot that isn't a coin. Remove the four screws on the black pc board compartment and set the cover aside. Unplug the board and remove. Spray both sides of the pc board with All Purpose Cleaner and gently brush with the nylon tech brush. If you don't have this type of brush take a one inch paint brush and cut the bristles to about 3/4 inch length. Brush both sides of the board and rinse. If available use compressed air to blow the board dry. If compressed air isn't available just set the board aside and allow to air dry. Be sure the board and components are completely dry before testing.

Turn the comparitor over on it's back and remove the three screws that hold the black pc board compartment in place. One is at the bottom of the frame and the other two are about two inches higher with one at each edge. Remove this housing and clean the coin path. Be sure to clean both the steel frame and the back of the board housing.

Now, still on the back of the frame, remove the spring that applies tension to the sensor head. Remove the screw that holds the black plastic slide for the head. On the frame at the end of the cutout where the head resides is a black rubber bumper. This bumper will pivot forward to allow the removal of the head assembly.

Once the head is out it can be opened up for cleaning. There is one fairly long screw

A: Sensor, Head

B: Weight, Lever

C: Adjustment potentiometer

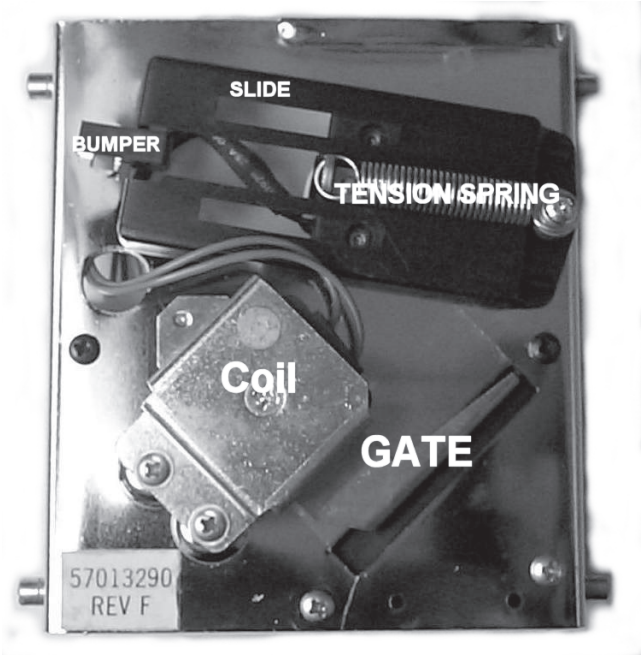

that runs through the head. Remove this and the head pretty much just opens into three sections. Lift out the weight and lever assembly and clean it thoroughly. Clean the sensor head sections (take extra care to clean the hole where the weight-lever assembly pivots). Blow dry these parts. Reassembly of the head is very easy. The wiring only allow the sections to fit in the correct order. Run the long screw from the front to the back. The small metal piece that acts as the nut is also the anchor point for the tension spring that holds the head and coin in place in the frame. The tall anchor portion of this part should be positioned toward the rear of the head during reassembly. Reinsert the head in the frame. As it slides into place, pivot the rubber bumper back into place. Put the black plastic slide into place and tighten the screw. Reattach the tension spring. Slide the head back and forth a few times to be sure it moves as it should and is aligned properly.

Back to the rear of the steel frame. About the only thing left here is the coil and gate assembly. Two screws hold this in place. Remove these two screws and carefully lift the coil-gate assembly out. The gate is held to the coil frame by a pressed-on plastic fitting that also houses the gate return spring. There is usually no need to pull this apart but if you do, be sure you reassemble with the spring in place or the comparitor will not reject properly. Clean the gate, taking special care to get the area that comes in contact with the comparitor frame. Also, clean the frame where the gate touches. Just a small bit of dirt here can cause the comparitor to not accept. Reattach the coil-gate assembly. Run the wires through to the front of the frame.

Replace the black plastic box that houses the pc board with the three screws that hold it in place. At this point, the circuit board should be clean and dry. Look for the large capacitor on the board. It is an axial 35V 220uF capacitor. Replace this one component. Put the board back into the housing and reattach the coil and head harnesses. Put the cover back into place and insert the four corners.

The comparitor is now ready for testing. Set the adjustment potentiometer to the one o'clock position. Place the comparitor into a tester (or machine). Insert a coin into the sensor head and see if it accepts properly. Test a variety of denominations. Adjust the potentiometer as needed.

This system will work for about eighty percent of the comparitors that need repair. If the board is in need of a board tech and there isn't one available, that's not too much of a problem. Happ Controls and AG&E can supply these boards at reasonable prices. Just replace them if needed.

Helpful hint. If called to a machine that's not accepting, before changing out the comparitor and adding to the weight of that bad parts box in the shop, check the wiring harness that powers the comparitor. If a wire is pulled off replace the harness and save the broken one for repair later. Then take a swab and clean the area where the gate hits the frame on the back of the comparitor. Also check that the lever is moving freely. If not, unscrew it and clean it and run the swab into the area where the lever moves. Reassemble and if it moves freely, close the door and ask the customer to try it. It's surprising how often that simple procedure will fix the problem.

- Pete Bachran
pbachran@slot-techs.com

Lightning Strikes
but You Can Strike Back!

By Randy Fromm

Lightning and slot machines don't mix. Come to think of it, I guess lightning doesn't mix too well with anything. I never really gave lightning too much thought, other than to enjoy a rare and delightful light show over the mountains of San Diego now and again.

But lightning's potential for destruction really hit home a couple of years ago. My neighbor Fred's cosmic dice came up "snake-eyes" and lightning struck his 40 year old pine tree. Holy mackerel! The bolt split the tree down the middle and blew splinters of wood (actually, deadly chunks probably would be a better description) for at least 100 feet in all directions. At the same time, the bolt shot through the railing of his redwood deck, superheating all the nails and blowing it apart as well. We found pieces of the deck in the front yard of the house, with neat little burned holes where the nails were. We never did find the nails. I assume they had been vaporized.

This past summer, the subject of lightning strikes came up a few more times in discussion with some of my technician buddies across the country. When lightning strikes a nearby power line, anything plugged into the line can be subjected to a momentary power spike of thousands of volts. The technical term for this brief, high-voltage spike is a voltage "transient." A voltage transient can easily exceed 1000 volts, possibly damaging anything plugged into the power outlet, whether the unit is turned on or not! Most on-off switch contacts are not insulated to withstand such high voltages. A nearby lightning strike can arc right across the switch, destroying the low-voltage circuitry in your radio/television/computer/slot machine, etc.

There is a way you can protect your equipment from damage due to lightning. There is a component called a "Metal Oxide Varistor" or "MOV" that is used specifically for transient suppression. For the best protection, two MOV devices should be used for each game. One MOV is wired directly from the "hot" side of the 120 volt AC power (also known as the AC "line" and identified by a black wire) to earth ground (the green wire that is connected to the round pin of the AC outlet.) The other MOV device should be connected between line and neutral. Neutral is the 0 volt return wire and is white in color. Use MOV devices with an RMS rating of 150 volts AC.

For those of you that are somewhat hip to electronics, an MOV works much like a zener diode. That is to say, the component doesn't conduct at all (it is "open") unless its maximum voltage rating is exceeded. When the maximum voltage is exceeded, the MOV will begin to conduct and "clamp" the AC voltage at a level that is low enough to (hopefully) prevent damage to the piece of equipment it is protecting.

AC power strips are commonly available that have MOV devices built into them. They are often referred to as "surge suppression" power strips but that isn't specifically correct. A surge is a momentary increase in the AC line voltage itself. An MOV may have some limited ability to absorb a voltage surge but its primary function is to absorb the potentially damaging volt-

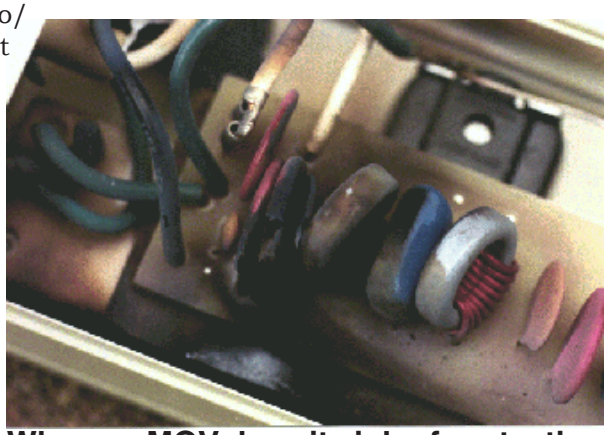

When an MOV does its job of protecting your slot machine, it sacrifices itself and blows up as shown here.

age transients caused by electrical storms and related phenomena. If your local regulations permit, plugging your equipment into such a power strip should provide some degree of protection.

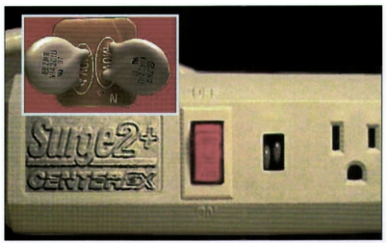

Commercially available power strips often use a pair of MOVs as surge supressors

It is not at all unusual to see an MOV that has literally blown-up. You may see just two component leads sticking up in the air where the MOV used to be and find the disk part of the component laying in the bottom of the game. This is an indication that the MOV has done its job by absorbing a transient. Because the MOV absorbs the transients by lowering its resistance, a brief but extremely high current flows through the device. Commonly, the type of MOV used in our industry can absorb 70-80 Joules (a Joule is a watt/second.) 80 watts may not seem like much, but imagine how hot a 75 watt light bulb gets when it's on. Now, imagine all of that heat concentrated in a time span as little as a nanosecond (one billionth of a second.) At its peak, the current can equal 6500 amps. That's not a misprint. That's 6500 amperes!

Now wonder the damned thing blows up when called into action. Interestingly, you may not even know that the MOV had activated and blown itself to smithereens until you happen to be looking inside the machine for some other, unrelated purpose and notice a piece of charcoal where the MOV used to be. The MOV absorbed the transient, blew itself up and protected your machine. In fact, that's why the MOV devices are mounted in a little window inside the power strip. Otherwise you might not know that the MOV had done its job (once) but is no longer in the circuit due to its demise.

A Better Way to Protect

For those of you that live in areas where electrical storms are common, MOV devices can save some costly repairs. However, now there is a better way to handle this problem with a new technology that is not "sacrificial." That is to say, unlike the one-shot approach of the MOV, this method enables permanent and continuous protection of the machines.

Dubbed "Protection Plus" the system is permanently installed at your breaker panels and provides two very special benefits. First, it prevents destructive external surges (lightning, power problems) from entering the AC power distribution panel. Secondly, it prevents harsh surges generated internally (equipment switching) from moving throughout the panel.

Lightning strikes somewhere on the surface of the earth around 100 times every second.

For example, many surges are generated each time a compressor motor, sewage pump, or elevator switches on or off. Surges also occur just by turning a fluorescent light on and off. These surges will travel from one electrical panel to another, crossing all of the breakers in these panels and travel down all of the electrical wires adversely affecting sensitive equipment (slots, UPS, computers, etc.). This stresses sensitive computer boards and causes equipment malfunction, unnecessary down time, repair costs, and reduced equipment life. The Protection Plus system stops these problems and literally cleans up the electrical pollution in every panel.

Many suppression devices are designed to allow 300 to 500 or more volts to pass before the surge protection device begins to work. This is done so that the suppresser performance does not degrade too rapidly. This is good for the suppresser, but very bad for your equipment. The Protection Plus system begins to work at 150 volts (for a typical 120 volt single or three phase system), which is an extremely tight clamping voltage. The Protection Plus system provides the best protection available and operates in a nonsacrificial manner.

As we continue using advanced technology in our gaming and hotel facilities, it is more important than ever to protect these investments with equally advanced transient protection equipment. New computer designs are introduced each year which process more information faster than computers just a year old. These new, smaller, more sensitive computers and micro circuitry have exceptionally dense circuit boards which are very vulnerable to even mild transient events.

How it Works

The concept here is to suck away the heat that is generated by the transient suppression devices before they blow themselves up. The special chemical potting compound used in the Protection Plus system is what enables this nonsacrificial performance. This advanced, deep heat-sink technology, with protected components, offers advantages in thermal stress reduction which are far beyond the ability of the common MOV. The Protection Plus is ISO 9001 Certified and UL 1449 Second Edition Listed.

For further information about protecting your casino from damage during this summer's lightning storms, contact:

Steve Kanter
StopSurge, Inc.
PO Box 3994
Gulfport, MS 39503
tel.228.832.8262
fax.228.832.5543
e-mail skanter@stopsurge.com

Using SDS Reports to Aid Troubleshooting

By Mike Thomas

The first thing that may come to mind when you think of slot tech test equipment is an oscilloscope, DVM, logic comparitor or slot machine PCB tester. You might think of machine diagnostics as well. But what if I mentioned the computer terminal as a piece of test equipment? Even better, what If I told you that the ability to perform basic computer programming functions on that terminal would be a very important diagnostic tool?

The Bally Slot Data System (SDS) provides a very useful function with hundreds of possible uses and methods to assist you in troubleshooting and determining the location of one or all slot machines with specified problems. I'm talking about the "Report Generator" command. In last month's issue, I talked about the ability to utilize and troubleshoot the player tracking systems as one of the key points in being a great slot tech. I only mentioned the basics on player tracking systems in that article due to the in-depth and diverse nature of all the different systems such as IGT smart, CDS, ACSC, etc. This month I would like to take a much more in depth look at utilizing these player-tracking systems, specifically Bally's SDS system. Advances in player tracking systems are going to revolutionize the way techs do their jobs. After all these years, we're now being asked to step back from all the hardware and venture in the land of software.

In this month's issue, I will give you the basic functions and tips to get started. Do your best to familiarize yourself with these functions over the next month. In the next issue I will include several more tools and tips to help you continue and broaden your knowledge of SDS.

In the "Report Generator" command of SDS, you have the ability to tailor reports using hundreds of different variables. In order to create these tailored reports, you will be required to use some basic functions found in most computer programming languages. By using these basic functions, you will create reports which prompt the system for specific information.

You will be creating what is called a "Specification (.spc) File." Yes, there are several reports built into the system that you can already use. However, there are even more you can create to better suit your needs. Almost all of the reports you will need as a slot tech will be included in the "Slot Maintenance Menu" at the SDS terminal in your shop. The reports listed on this menu are the reports that are specifically requested by your casino when Bally originally installs the system. Typical examples will include the "Door Open Report" or "Slots Not Communicating Report."

A slot tech's access to the system may vary as well. Most casinos on SDS allow the slot techs access to the report generator function. However, they typically will not allow the slot tech access to edit these reports nor to the "Specification File Maintenance" command. In the worse case scenario, you may not have access to any of the functions necessary to create specification files. If that is the case, contact your manager and request your access be updated or submit your completed specification file (spec) commands to your MIS department for them to input the data for you. You will still need access to the report generator command to run the file.

You want to print a report that will list all slot machines that have not had the cash box switch increment in the last drop period. At the end of each slot machine in the report, you want the heading "tech initials" where the respective tech doing the inspection of the BV can put his initials. This can only be done using the header, print, exclude, and include functions in the report generator. Whether you simply want to omit certain machines or denominations, or limit or expand your time frame or exception codes on the report, you can with this advanced function.

To begin, I will cover the basic purposes and sections of your specification file. Each specification file contains six basic parts.

1. Comments
2. Report Name
3. Headers
4. Include and Exclude
5. Sort
6.Print

In the comments section you will include such information as the date you created the file, the author and a description of the files purpose or content. The comment section is only necessary for the "user" because the system will not use any of this information to process your requests. The comment must always begin with an exclamation point (!) at the beginning of each line.

! Mike Thomas
! 09-Jun-01
! BVxc96 report
! Cash box switches not incrementing

Another optional entry is the Report Name. If you would like a title at the top of each page, you may enter by performing the following: (The text within the double quotation marks is what will appear at the top of each page.)

Report name is: "*Mike Thomas's Cash Box Switch Report*"

Next is the header. This is optional as well. You may customize the header but if you do not, SDS will issue the default headers. I typi-

cally use the default headers for my reports.

The *Include* and the *Exclude* statements are the heart of your specification files. These are required items for your file. They are also the most powerful tools for identifying the specific problem you are seeking and most accurately identify which machines have the problem that you're looking for.

Initially there are no machines selected to appear on the report. It is necessary to have at least one included in every specification file. It is very important to remember that if the field you use is an alphanumeric field, the qualifying data must be enclosed in quotation marks. The mathematical signs you can use in these statements include the following: =, <, >, or # (not equal to). In order to use this fully, you will need to have a copy of the SDS Schema File. In the schema file, you will find a list of all the field names and exception codes. When beginning to run your new reports, you will find that several machines will appear which either do not exist or do not apply to your defined criteria. Therefore, all of your spec files may require you to *Exclude* certain fields by their online or off-line status, by their slot or stand number, etc. You will need to find the data these fictitious or unnecessary machines have in common and exclude them appropriately. The completed spec file below will provide you a few examples of filtering our erroneous data. Various examples of Include and Exclude statements are:

Include All
Exclude if slot status = "off"
Exclude if denomination # 1
Include if xc96 > 1

The next required field is the Sort statement. The sort statement determines the order in which your machines appear on the report. You have to have at least one Sort and can have up to ten.

Sort on Denomination
Sort on Stand Number
Sort on Slot Number

The last required field is the Print Statement, which determines what information is displayed on the report. Every specification file must have at least one print statement. The print statement allows you to add a line on the report for initials.

Print slot number, stand number,xc10, "initials:_____"

The last thing you will want to add to your specification file is the word *end*, it is not required but I normally end all of my specification files with it.

There are additional functions available to you such as, define, header, format, and calculate however, I have not used any of these more advanced functions in any specification file intended for slot maintenance. The following is a specification file used for finding faulty bill validator cash box switches.

Exclude All
Include if xc96 < 1
Include if xc97 < 1
Exclude if slot number > 9999
Exclude if slot number is < 900
Exclude if slot status = "off"
Sort in ascending order on stand number
Print slot number, stand number, xc97, "initials____"
End

The advantage of the above specification file over the "Door Open Report" already in the system is that it shows the cash box switches which have not shown the box as having been removed and replaced during the drop period. This is a problem because if the SDS system does not see the cash box switch increment during the drop, it will create a bill variance. It is equally important to insure that the drop door switch is incrementing as well. To perform the check on the drop door switch, the only change to the above specification file will be to change your exception codes from xc96,97 to xc73,74 (drop door opened and drop door closed respectively). These are the two greatest tools a tech can utilize when searching for hard or soft meter variances on the slot machines. The reason I attribute these faulty switches to variances is that at the time the drop is performed, the drop team activates the drop period in the SDS system. During this period, whenever a cash box or drop door is opened and closed, the GMU sends the electronic meters to the system. After the physical count of your coins and bills is entered in the system, SDS compares the electronic meters to the physical count. If the figures do not match, you have a variance.

When the drop period ends in SDS, there are remaining machines that have not had the Cashbox/Drop door switches increment. The SDS then forces the GMU to download the meters at that time. All play, which occurred from the time the Cashbox/Drop bucket was replaced, will be the amount of your variance. These figures will balance out in time however, a slot tech will have had to check this BV after every drop period to find the reason for the variance. Without the resulting data from the specification files above, this same tech will get very frustrated finding, week after week, a properly operating and incrementing Bill Validator.

As you can see, it is easy to underestimate the troubleshooting ability of the newer player tracking systems. I urge all techs to start to further your education on the utilization of this new, high-tech resource.

Last month, at the Southern Gaming Summit, I was fortunate enough to sit in on a seminar on Gaming Technology. Much of this seminar was dedicated to player tracking technology. The panel included the top executives of the major player tracking manufacturers such as IGT, Bally, Acres, CDS etc. They were eager to state that greater technology was available but collectively they agreed that the ability to use this technology in the casinos was lacking. This is indeed the next step for the casinos so do not make the mistake of forcing the burden on your MIS departments to use these systems. Most MIS employees learn only the basics in order to maintain these systems, update them and keep them running. The burden is on the slot tech to find ways to utilize player-tracking systems to the slot department's advantage. The slot tech has the greatest exposure to the system's software and the opportunity to work daily with the hardware as well. Look to next month's issue for an even more in depth look at SDS spec files and more examples of very useful spec files. Until then, stay positive and never stop learning!

- Mike Thomas
mthomas@slot-techs.com

Introducing the JCM Intelligent Bezel

By Bart Holden

Don't you wish that a company would cre ate a product from time to time that would make the job on the casino floor a little easier for the slot tech? How about a slot machine that automatically changes fluorescent bulbs with a refillable cartridge located inside the slot base? Or, wouldn't it be great to have a casino full of self-cleaning slot machines? They have self-cleaning ovens. OK, perhaps I'm pushing the limit. However, I did come across an exciting new innovation at the Southern Gaming Summit. Japan Cash Machines (JCM) has created a bezel that works with World Bill Acceptors to give valuable information before the slot technician arrives.

Let's say you are busy troubleshooting a monitor in the shop. You're in the zone, man or woman versus monitor, and your perfectly silent radio demonically screeches to life.

"I need an available slot tech to A203 for a bill validator that will not accept a bill."

You nearly jam both hands through the Cathode Ray Tube as you listen anxiously for one of your co-workers to answer the call. They do, but they are tied up with two hopper jams and a touchscreen that isn't responding. Reluctantly, you volunteer to break your train of thought and check the bill validator. Do you go directly to the game only to find that you need to get the bill validator key or do you bother security to get the key first? Should you grab any spare parts for the repair? If you have an Intelligent Bezel on the game, the attendant can answer these questions for you and get you back to that monitor a little sooner.

That's right, by simply looking at the bezel for a code, a floor person can easily determine what the slot technician will need to repair the bill validator. There are several symbols on the bezel that independently illuminate depending on the problem. For instance, one symbol lets you know that the bill validator can be repaired on the floor using the key. More than likely, this code would signify a cashbox problem such as a jam or an improperly seated cashbox. Another symbol indicates that the bill validator has a bill jam or some other foreign debris blocking the sensors. A third symbol lets you know that the bill validator needs to be repaired on the bench. In this case, you could bring a calibrated validator head and transport to swap with the faulty one.

Fault analyzing is not the only function of the new Intelligent Bezel. The bezel also is equipped with denomination symbols that illuminate depending on the last bill accepted. Although this information can be attained through diagnostics and some player tracking systems, it does keep the player from becoming suspicious when an attendant starts using a reset key and scrolling through numbers.

The bezel should be very easy to install. It consists simply of removing the old bezel and replacing it with the Intelligent Bezel. There will be a harness to route through the game from the bill validator head across the door and to the bezel. The cost will be fairly inexpensive to upgrade your old bezels. The kit should cost less than $75 per game and prices could vary for large orders. JCM is manufacturing the bezel only for the WBA models at this time. Perhaps we will see an upgrade for Dollar Bill Validators (DBV) soon.

In today's gaming industry we all know the importance of keeping our bill validators in working order. This new bezel is an invaluable tool for a casino to assist their slot technicians in winning this battle. Thanks JCM and keep up the great work.

- Bart Holden
bholden@slot-techs.com

Look for more on this new product in October! - ed

THE INTERNATIONAL CASINO EXHIBITION
EARLS COURT, LONDON
22-24 JAN 2002

ICE IN DEMAND

- ICE 2002 83% Full

Demand for stand space at London's 2002 International Casino Exhibition (ICE) is running at an unprecedented level according to the latest figures released by the show organisers. As of 1st June 2001 – nearly eight months ahead of the show going live – 83 per cent of available exhibition space had been allocated, with 67 organisations booking their stands and 11 companies increasing their presence year-on-year.

LaserTron executive Norm Petermier (l.) and Wells-Gardner Electronics President and CEO Anthony Spier watch a fruit machine expert in action. That's Tony's wife Lori showing 'em how it's done at a recent ICE in London

Karen Cooke, sales manager responsible for ICE said: "ICE 2001 was an excellent event for all sectors of the casino industry, and this is being reflected in the early bookings we have received for 2002." She added: "To have just 1,000 sq. metres or 17 per cent of space remaining nearly eight months in advance of the show is unprecedented. As a result of this level of response we are in the process of drawing-up plans to operate a contingency waiting list once the hall reaches capacity."

Show organisers are building on a solid foundation as they prepare for ICE 2002 at the Earls Court Exhibition Centre. The January 2001 event attracted a record attendance of 5,136 dedicated casino professionals, a figure which rose to 10,208 when the cross-over attendance from sister show ATEI was included. The number of represented nations rose to 95 with France topping the league table of international buyers followed by USA (second), Netherlands (third) and Germany (fourth).

Exhibitor information from Karen Cooke (kcooke@atei.co.uk) or www.ice-london.co.uk

Press enquiries to Chris Jones or Alex Fierek at Scott & Jones Communications
Tel: +44 (0) 1273 204817
Fax: +44 (0) 1273 204827
E-mail: info@sjc.co.uk

Introducing Wholesale Electronics

At the recently-held Southern Gaming Summit in Biloxi, Mississippi, I was going through my usual trade show routine (saying hello to old friends, looking at new products and handing out copies of Slot Tech Magazine to anyone and everyone I could find) when I was approached by a pleasant woman with a complaint about the April issue.

"I am disappointed that you left us out of your list of electronics suppliers," she said.

"OK. Who are you?" I asked.

"Why, we're Wholesale Electronics and we specialize in replacement components for the casino industry." she said, identifying herself as Kay Snelling, national sales manager for the firm.

Always one to oblige, I promised her that I would correct that oversight in the July issue of the magazine and asked her to send along some information about the company. Here it is:

Wholesale Electronics
"Your Future Is Our Focus"

Since Atlantic City first opened its doors to slot machines, Wholesale Electronics has been providing great customer service. Wholesale Electronics takes its philosophy from the people who run the company. There is an integrity and attitude of service that runs throughout the company as a direct result of their leadership.

On many of the publication you receive from Wholesale Electronics, you will see the phrase "Your Future Is Our Focus." While we can't take credit for writing that phrase, we certainly apply it to every aspect of our service to you, the customer.

Wholesale Electronics helps you make the right connection with our 2001 Gaming Catalog, free upon request. We went to great lengths to make certain the catalog is the easiest to use in your library; we offer the maximum amount of information for sourcing needs. You'll find part numbers, prices and pictures for just about everything we sell to our gaming customers, organized in the simplest way we could find.

With thousands of suppliers and tens of thousands of parts, we can't possibly cover everything. If you need something not listed in the catalog, simply call Wholesale Electronics and talk to a sales rep who will work with you to supply what you need.

Do you ever wish you have more hours in your day? At Wholesale Electronics, we'd like to help you feel that you do have more hours. We offer the convenience of scheduled shipments and/or blanket purchase orders.

Customers from coast to coast are using scheduled shipment orders to make certain they never run too low on fluorescent lamps, agitators, batteries, and cable ties. Not only do they not run out of these things, they don't have to put huge amounts in stock at one time to get the best price.

Blanket purchase orders are great time savers, since you need only get approval for one dollar amount and get one set of signatures. Then you can say send me 200 coin mech pins overnight on my blanket order and you're done.

Wholesale Electronics carries gaming licenses for states across the country, providing the gaming industry with the parts needed for maintaining their slot machines. While the laws and licensing requirements vary from state to state, Wholesale Electronics' customer service does not and has made the commitment to keep the licenses required by law.

What does this mean to you as a customer? It means that there are places you may not be able to buy from directly, because of licensing requirements. Wholesale Electronics can buy from them on your behalf. You need to know that your parts are on their way, and there won't be any delay from the Gaming Commission.

Whether you're buying for the casino using your Net 30 account, a corporate purchasing card or buying for yourself using a charge card, you can rely on Wholesale Electronics to provide the same outstanding and personalized attention.

Over the years, there has been many changes in the industry. You can count on Wholesale Electronics to provide you with the most current information available and a customer service philosophy the firmly keeps "Your Future in Our Focus." Call Wholesale Electronics today at (800) 222-2899 to request your free Gaming Catalog or for more information.

Slot Tech Spotlight Saipan Style

Meet Paul Trombetta

Hi Randy,

Things are growing well. We have about 16 employees now and are operating almost 100 IGT pokers at this time (among our other amusements). All Players Edge Plus with bill acceptors. Hopefully I'll start making money one of these days, ha ha.

Interestingly, we are having to operate a joker poker with a pay table which returns an optimum 99.9% payout. This necessitates a very high volume to be able to realize a profit. The competitive situation is such that we ended up spoiling these players, big time. They won't play on anything else if we present it to them.

Some of the common problems we have with the IGT PE+ are with silly things like eeprom on

the mother board, CC16 solder joints, etc. You would think that some components would be far more reliable considering the overall quality of the machine. IFT button plungers have a high failure rate - drives you nuts. Also micro switches fail at a very high rate. We switched over to the Happ small square pushbutton and solved the plunger problem but Happ legends are very brittle and don't last long. We solved that problem by making our own legends simply by printing on white paper; laminating the paper and cutting them out. They are flexible and don't break and look like the originals. I have not found a micro switch that will have a longer life, unfortunately. We discovered the key to making money with pokers, however. It's BILL ACCEPTORS. We use the Happ side car with mars zt1202. Very expensive but an awesome setup and very secure!

Enough of my rambling. My "tech" blood comes out now and then. I don't get near enough tech time these days, unfortunately.

I'll subscribe on the net.

Paul Trombetta
Pacific Amusements
Saipan

Slot Tech Magazine Visits Si Redd

I first met Si Redd in late October of 1980 at the venerable Conrad Hilton Hotel in Chicago, Illinois. As an eager young technical writer for Play Meter Magazine, I was staffing our booth at the AMOA Expo.

This was the coin-operated amusement industry, of course. It was also the Golden Age of videogames where Pac-Man reigned supreme and service calls to fix a coin jam often meant that the cashbox was completely full and not a single additional coin could be inserted until the box was emptied.

It was a time of lavish corporate parties as well. It was the year that Williams Electronics rented the ballroom at the Ritz-Carlton hotel and threw a party the likes of which has never been repeated and is still being mentioned to this day, some twenty years later. We're talking about hundreds of pounds of jumbo prawns, mountains of chocolate desserts, two bands and a silver gift from Tiffany's for each woman that attended.

I had just returned to the booth from a quick walk around the show floor and there was this old man sitting on a chair in our booth, chatting to the other members of our staff and to a virtual parade of showgoers, all of whom seemed to know this guy. It was like something from "The Godfather" as folks were lined up to shake his hand (no ring kissing) and offer greetings.

After witnessing this for about fifteen minutes, I called Play Meter Magazine's editor, Valerie

Si Redd points to one of the few remaining slot machines still in his collection at home in Solana Beach, California. It's a Mills Blue Front, still with the original rolls of candy mints from 1933 in the dispenser on the side. "Don't eat those." entoned Redd. "They were bad back then. They'd probably kill you now!"

Cognevitch aside and asked her "Who IS this guy?"

"Why, that's Si Redd," she explained. "He used to be in the amusement business. Now he's into gaming but he loves this business and just stops by to say hello and see what's happening. Do you want to meet him?"

She introduced us to each other and we spent a few minutes giving each other our background. Of course, I didn't have much to say at the time so I mostly listened to Si talk about his beginnings in the amusement industry. It sounded like something from a Hemmingway novel. He talked about being the son of sharecroppers, about living in Philadelphia, Mississippi, about buying a used, 1932 Bally "Goofy" machine for sixteen dollars, placing it in a dirt-floor restaurant and returning a week later to discover that the machine had thirty-two dollars in the cash pan.

Si was hooked on coin-op and remained in the amusement side of the industry operating jukeboxes until 1967 when he traveled to Reno at the behest of Bally's Bill O'Donnell. It was there, on the streets of downtown Reno that he first saw a Big Bertha slot machine in action. The machine was in front of the Horseshoe Club and had just hit a jackpot for the woman that was playing it. According to Si, she was yelling and screaming and making so much commotion that a small crowd had gathered around her and the machine. Si ran over from across the street and fell in love. No, not with the woman, with the Big Bertha!

Si went on to explain how he

"Service is everything in this business."
- Si Redd

moved to Nevada, eventually forming his own manufacturing company called SIRCOMA (for Si Redd's Coin Machines) in 1975, which eventually became the powerhouse game manufacturer IGT.

We saw each-other on and off for the next decade or so but his visits to the coin-op amusement shows became fewer and fewer. Si is out of IGT com-

Photo courtesy of Play Meter Magazine

Si Redd in 1990 with his good friend Louis Boasberg of the New Orleans Novelty Company. The two remained close until Boasberg's death in 1993.

pletely now and comfortably retired at age 89 in the San Diego beach community of Solana Beach, about fifteen minutes from the offices of Slot Tech Magazine. When I first contacted him to arrange an interview, he wasn't too enthusiastic about it.

"Give me your address and I'll have my secretary send you a package of material." he said. "Everything you need to know has already been written down."

"But Si," I responded, "I know all that stuff about your past. What I'd like to know is a little bit about the service aspect of your operations. How did you fix the machines? What kind of service problems did you encounter? What types of tools and vehicles did you use?"

At this, SI really lit up and invited me to his home to discuss it further. When I arrived, Si met me at the door, took my arm and invited me downstairs to his kitchen where we talked for about an hour. Actually, Si talked and I listened, as this was the easiest interview I had ever done.

When we finally got around to the subject of service, he mentioned that service was never much of a problem with their early video poker machines. Because they didn't have all of the mechanical, moving parts that had caused so many of the problems in the mechanical and electromechanical slot machines of that era, service was mostly constrained to common things like coin jams.

He did, however, tell of one interesting service call to the far reaches of northern Nevada. His men had just installed a Big Bertha machine at a casino, delivering it by truck all the way from Reno, 150 miles away. Not a couple of hours had passed before the machine had a malfunction that needed attending to. Unfortunately, the deliverymen had forgotten to leave the key to the machine with the location. Unfortunately too, the deliverymen and the truck were long gone by then, on their way back to the shop. This was the time before cell phones and pagers, of course, so there was no way to reach them to tell them to turn around.

"Service is everything in this business." commented Si as he continued the story. "This thing was there on participation. We had to get the machine up as soon as possible so I rented an airplane. It had to be a pretty big one too. We loaded up a whole Big Bertha and flew it up there. That guy Pete that owned the place said 'Nobody gives the service that Si Redd gives.'"

When asked about his early successes in the gaming industry, Si attributes it to his background in the coin-operated amusement business and its emphasis on service.

"Giving 'em good service and quality service is the reason." said Redd.

Si Redd with Slot Tech Magazine publisher Randy Fromm

On a personal note, he also said something to me that almost brought tears to my eyes. He was thumbing through a copy of Slot Tech Magazine, when he raised his head, looked at me point-blank and said "I like this. This is good. I'll do everything I can to help you."

Si, you just did. Thank you.

- Randy Fromm
editor@slot-techs.com

Understanding Coin Hoppers Part III

By Frank Sutter

It's time I turn my attention to escalators. Last month, I believe I referred to the escalator as a "diabolical piece of engineering". The reason I make that assessment is simply because they don't work!

How can I say that? After all, at any given moment, 24/7/365, a gaming patron somewhere in the world is probably receiving coins from an escalator hopper. When I'm faced with this fact, I guess I have to admit that they actually do work. However, I approach these articles from the perspective of the technician and my assertion has more to do with jamming frequency and down time.

Ask anyone who has spent a year on the casino floor about the number of escalator hopper jams that they clear verses the number of side-eject hopper jams that they clear. There is no comparison. The ratio must be around 10 to 1. Next, ask that person to consider the relationship in terms of total time spent clearing escalator jams verses total time spent clearing side-eject jams.

If the first ratio is 10 to 1, then the second ratio must be about 25 to one, because it normally will take about two and a half times as long to clear an escalator jam. When considered in terms of comparative failure rate and down time, I will stand by my statement that escalators simply don't work.

Nonetheless, gaming patrons seem to love slant-top games and until someone more intelligent than I devises a better method of dispensing coins from them, we're stuck with the escalator. You can consider it job security.

In a side eject hopper, if a coin makes it to the exit chute alone, all that is left is to ride along the knife and drop out of the machine! However, in an escalator model, the real journey is just beginning. Once it gets into the coin chute, it takes a 90-degree turn and begins to get pushed upward by the coins behind. The escalator stacks the coins edge to edge, and the actual contact between the coins is very slight. The coins also ride along thee escalator rails and the back in order to keep this fragile stack aligned. At the top of the escalator, there is usually a counting system that may or may not include an ejection mechanism. This entire contraption provides a whole lot more that can go wrong and, as all technicians know, the more opportunity for things to go wrong the more that eventually will.

Jams can be caused by shingled coins, a bent coin, a coin of the wrong denomination, dirt or debris, a jammed coin counting mechanism or coin eject mechanism, an alignment problem with the exit chute, or even a broken wire in the coin-count switch. In this case, there is no jam and the hopper pays normally, it's just that the CPU cannot see any of the coins that come out. The CPU confirms that the hopper is turning, then waits about seven seconds to detect a coin out. If no coin is detected, the machine will go into the fault mode, and a jam will be reported.

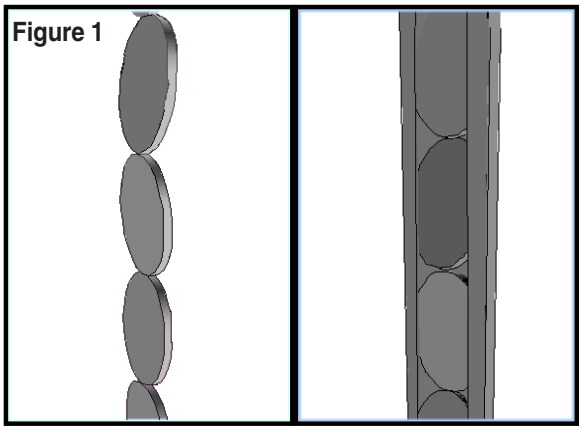

The escalator stacks the coins edge to edge. The actual contact between the coins is very slight. The coins also ride along thee escalator rails and the back in order to keep this fragile stack aligned.

When approaching an escalator jam, the first step is to grab a flashlight and examine around the knife for the normal jams at the exit chute. If you find that all looks normal there, visually scan the escalator for signs of trouble. If no jam is obvious, push upward on the lowest coin you can reach on the escalator, and see if you can pop one out of the top of the escalator. If the coins in the escalator refuse to move, you can narrow the location of the jam by finding out where the coins can move, and where they cannot. Just back a couple of coins out of the bottom of the escalator by rolling the pinwheel backwards. The loose coins will drop downward in the escalator, while the jammed coins will stay put.

Start by freeing-up space either above or below the jam so that the coins have a little room to move. Next, place the flat blade of a small to medium-sized screwdriver on the flat surface of one of the coins (not the edge) and tap it with a hammer. For a clearer idea of what I'm trying to say, please see figure 2, below.

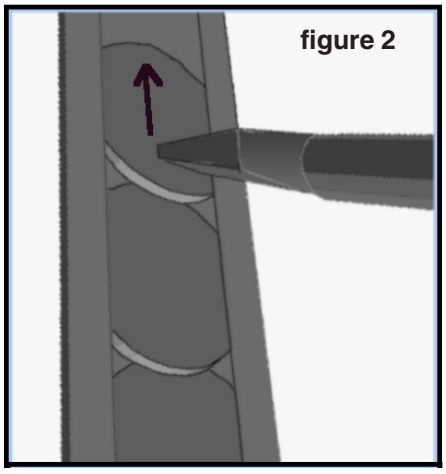

figure 2

Please do not do the obvious thing and place the blade of the screwdriver on the edge of the coin, as pictured in

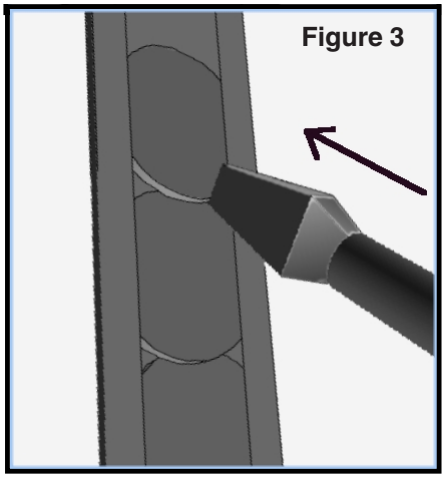

figure 3. It is true that the coin will be easier to move but eventually, no matter how careful you are, the blade will slip off the coin and score the inner surface of the escalator. In fact, if you examine the inner back wall of the escalator, you may find damage that other technicians have caused in just this way. It should be easy to understand that this damage will provide extra resistance for the coins as they travel up the escalator, thus increases the likelihood for the coins to jam.

If the escalator has holes along the back surface, these can be used to lever a coin through the escalator (see figure 4). This technique is most useful when a bent coin or debris has caused your jam and not helpful when the coins are shingled. Please be advised that there is a danger in using this technique. It must be used correctly or the escalator may need repair in the shop.

The first step in this technique is to decide from which direction will be easier to remove the coin: up or down. It's been my experience that up is usually better because there is that 90-degree turn at the bottom to deal with if you go down.

Next, remove a coin from the escalator to leave a little slack in the column of coins in the opposite direction of the way you want to move the coin. In other words, if you want to remove the coin from the top of the escalator, roll the pinwheel back one place until a coin comes out of the bottom and the coins below the jam have some room to move.

Find a spot where there is only part of a hole showing when the coins are resting on the jammed coin and insert the screwdriver FROM THE BACK OF THE ESCALATOR to lever the coin. I emphasize from the back because the levering action can mushroom the lip of the hole in the escalator. If that happens, the escalator could very well be out of service forever. The only way to save it would be to remove the hopper from the game, take it to the shop and grind off the mushroomed edge with a hand-held rotary tool. Understand that if the jam offers that much resistance to movement, it might have a serious problem that should be attended to in the shop anyway.

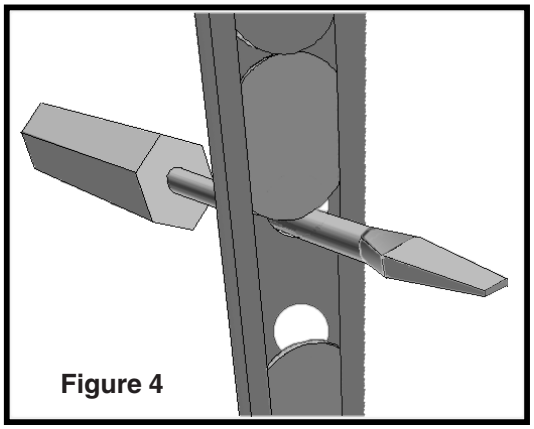

If the escalator has holes along the back surface, these can be used to lever a coin through the escalator.

I've mentioned that resistance to coin motion increases the likelihood of jamming in escalators. That statement seems intuitively correct but here's the exception to the rule: The escalator wiper (see figure 7) was put in place by the design engineers specifically to offer resistance to coin motion in the downward direction. Because it so obviously offers resistance, when a hopper has a chronic jamming problem there is a tendency among slot attendants and inexperienced technicians to remove or defeat this wiper. This is a mistake and will virtually guarantee that the hopper will jam again. Here's why:

As the pins of the pinwheel move the coin (see figure 5) along the knife towards the exit chute, there comes a point where the pin can push the coin no further. At that point, the pin loses contact with the coin and the only force acting upon the coin is gravity. The coin will then roll backward (see figure 6) a very small distance until it comes in con-

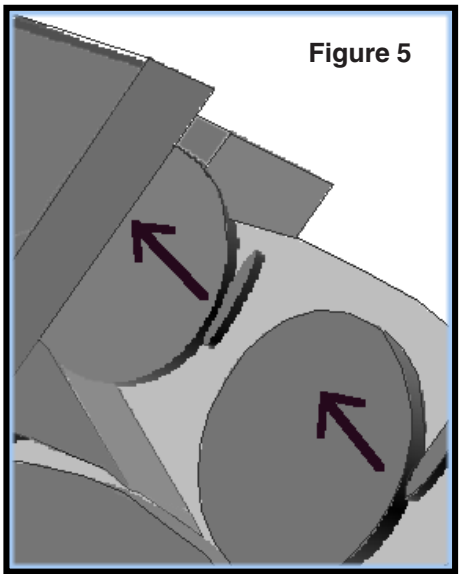

As the pins of the pinwheel move the coin along the knife towards the exit chute, there comes a point where the pin can push the coin no further. At that point, the pin loses contact with the coin

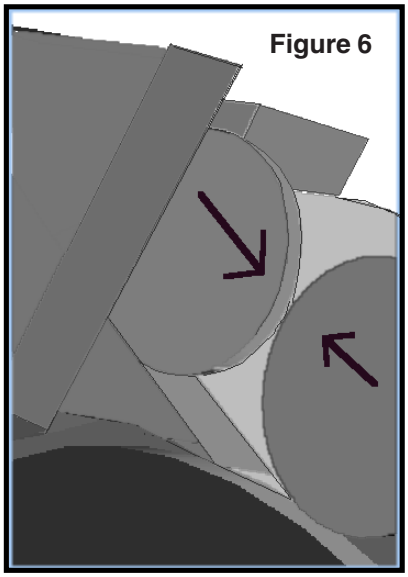

The coin will then roll backward a very small distance until it comes in contact with the next coin being pushed forward by the pinwheel.

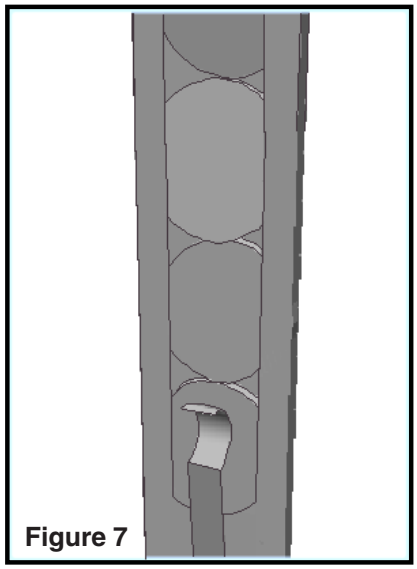

If the escalator wiper is in place and doing its job properly, all of the coins above the wiper in the tall column of the escalator chute will be held in place and not allowed to fall backward towards the coin entering the exit chute

tact with the next coin being pushed forward by the pinwheel. All this takes place right about where the coin is entering the exit chute.

When that coin rolls backward to come in contact with the coin following, the force of the impact that occurs will depend less upon the distance that the rolling coin is traveling and more upon the weight behind it. That's where the escalator wiper comes into play.

If the escalator wiper is in place and doing its job properly, all of the coins above the wiper in the tall column of the escalator chute will be held in place and not allowed to fall backward towards the coin entering the exit chute. However, if the escalator wiper has been defeated, such as having been bent out of place, the entire weight of the coins in the column will come hammering down on the next coin trying to enter the exit chute. Remember too that this impact will repeat itself with each new coin that tries to enter the exit chute. Believe it or not, the mechanics can still work for quite a while at times but you can be sure that eventually the hopper will jam again, doubling coins right at the exit chute.

Slot attendants LOVE to bend these wipers and I have long ago given up trying to change their minds with complicated technical explanations. Therefore, I have come to look upon all of this as yet another form of job security.

Escalators are a study all to themselves, and it looks like I'll have to finish them up next time. At least one more article on hoppers has to be in the works, so until next time, keep em runnin'!

- Frank Sutter
fsutter@slot-techs.com

Removable Core Cam Locks

Ease the pain of losing a slot machine key

By Brad Smith

Have you ever lost a key to one of your slot machines? If so how long does it take to change out all of your locks? With the Medeco DuraCam II you can replace the core of the lock in a matter seconds, providing an entirely new key combination. The DuraCam II was designed to make changing out your locks quick, easy and secure.

Medeco polled the market and spoke with casino operators and technicians. We found that one of the biggest threats facing the gaming industry is the possibility of losing a slot machine key. If a key is ever lost or stolen, there is an immediate threat that someone can have access to the machines. The locks must be changed, and they must be changed as soon as it is discovered that a key is missing. The longer it takes to change the locks the more risk a casino assumes.

To change ordinary cam locks, technicians must perform several time-consuming steps. They must open the machine, remove the cam nut, remove the cam, remove the lock nut, and finally remove the lock. Then they must insert the new lock, tighten the lock nut, install the cam, and tighten the cam nut. Even if it only takes five minutes to change a lock, when you multiply that by 1000 machines you end up with over eighty-three man hours. This means that with a team of five workers it will still take more than sixteen hours before security is restored. When a key is on the floor you usually don't have sixteen hours to change your locks, and just imagine if there are more than 1000 locks to change.

With the DuraCam II the process gets much simpler. Insert a controlled key, and pull out the lock core. Next replace it with a new core. This process provides an entirely new key combination, and the lost key will no longer open any of the machines. This process can be completed in a matter of seconds and shortens the amount of time it takes to change the old locks. In short, the DuraCam II greatly reduces the amount of time machines must be down.

Having a removable core cam lock saves time, and it will save money as well. Calculate the amount of revenue lost due to machine downtime, plus the additional cost of purchasing entirely new locks. This way of maintaining the integrity of a casino's slot machine security is extremely expensive. With the DuraCam II not only does the time associated with changing locks improve but also replacement cores are much more economical than purchasing new locks.

Because changing the core of a DuraCam II lock is so quick and simple, consider the amount of revenue that one can actually save. Additionally, in most cases, it is not even necessary to ask a player to leave his seat to change the core of a DuraCam II.

Not only does the DuraCam II removable core cam lock provide money saving solutions in the event of a lost key, but also Medeco locks, including the DuraCam II, offer one of the highest levels of key control. With the DuraCam II not even the slot machine manufacturer can access the machines once they are in a casino. The DuraCam II is available with a set up core that can be installed by the manufacturer. This feature does two things for slot operators and technicians. First, it saves time and money because the manufacturer installs the locks. Secondly, when the machines arrive technicians can remove the set up core and insert the house cores. This process requires the same effort as replacing cores when a key is lost and can be implemented in a few seconds.

Now you know about the specific benefits of Medeco's DuraCam II removable core cam lock, but are you aware of the other important features of Medeco's line of locks for gaming applications?

All Medeco locks are patent-protected. This protection helps assure that no one other than authorized personnel can a key to the slot machines. Not even Medeco's locksmiths carry the unique key blanks created just for the gaming industry. Key blanks to the DuraCam II are only available to Medeco's authorized network of factory authorized gaming outlets. If blanks could be purchased on the open market, casino operators would have little control over unauthorized duplication.

When a casino buys Medeco

locks, the casino decides who in the company may have duplicate keys made. The list of authorized personnel along with each person's signature is kept on file at the casino's service center. Medeco and its service center take key control issues seriously, and only issue keys to those authorized to have them.

Medeco utilizes a network of service centers at regional locations in order to provide casinos with the fastest service in case of emergencies. This network ensures two very distinctive things. When a customer needs a key quickly, he has a regional source from which to obtain it. Secondly, since only the Medeco factory and Medeco's service centers have access to the unique DuraCam II key blanks, it is virtually impossible for someone to illegally duplicate the key.

Another issue casino operators have with slot machine locks is the frequency of key breakage. Simply by the way the locks operate, keys are unusually susceptible to breaking. In some applications such as the machine and drop doors, keys may be used as handles to open the machine.

This usage produces tremendous torque and pressure on the keys, and thus many keys tend to break. With the DuraCam series product Medeco has increased the thickness of the key, beveled the tip, placed the Medeco's patented angled cuts on the top of the key and utilizes a horizontal keyway.

The thickness of the key makes it stronger, the beveled tip allows for easier insertion into the lock, the cuts on the top instead of the side provide more durability, and the horizontal keyway allows for less torque. All these factors produce a stronger key that is guaranteed for life.

For over thirty years, Medeco has provided some of the best high security locks in the industry. Obviously an exceptional high security lock is important to casino operators to protect their profits. Of the locks designed for the gaming industry, it is also important to consider other features available in a high security lock. The DuraCam II lock, designed specifically for slot machines, solves many of the issues casino operators reported to us. Can the DuraCam II lock help make your casino operate more efficiently?

If you are interested in getting a free sample of the Medeco DuraCam II to examine, please contact Medeco customer service today.

Medeco is the leader in high security locks for the gaming industry. Located in Salem, Va. Medeco has been making high security locks for over 30 years. As an ASSA ABLOY Group company, Medeco is committed to providing global excellence throughout the gaming industry. 1-888-633-3261.

By: Brad Smith
Marketing Manager
Medeco High Security Locks
Industrial Security Division
Specializing in Gaming, Vending, Parking, Pay Phone and OEM locks.

Subscriptions

Randy Fromm's

Slot Tech Magazine is published monthly by:

Slot Tech Magazine
1944 Falmouth Dr.
El Cajon, CA 92020-2827
tel.619.593.6131
fax.619.593.6132
e-mail editor@slot-techs.com

Subscription rates:

Domestic (USA)
1 year - $60.00
2 years - $120.00

International
1 year - $120.00
2 years - $240.00

Purchase orders will be invoiced.
Payment by check or credit card.

Company Name _____

Contact _____

Address _____

Address _____

City _____ **State/Prov.** _____

Country _____ **Zip/Postal Code** _____

Telephone _____ **Fax** _____

E-mail _____

Type of card: [ ] American Express
[ ] Discover
[ ] MasterCard
[ ] Visa

Account Number: _____

Expiration Date: _____

[ ] 1 year subscription, domestic
[ ] 2 year subscription, domestic
[ ] 1 year subscription, foreign
[ ] 2 year subscription, foreign