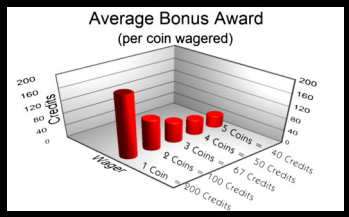

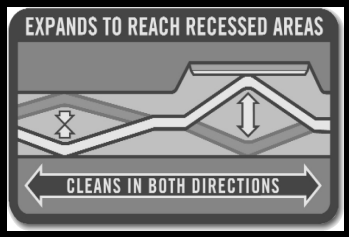

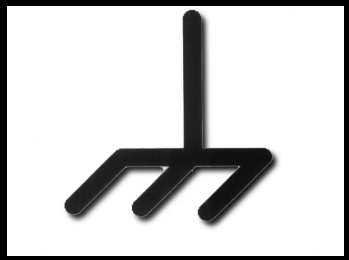

TechFest 10
Excalibur Casino
Las Vegas, Nevada
Nov. 30 - Dec. 2 2004

Slot Tech Magazine is an Official Publication of

global gaming expo G2E

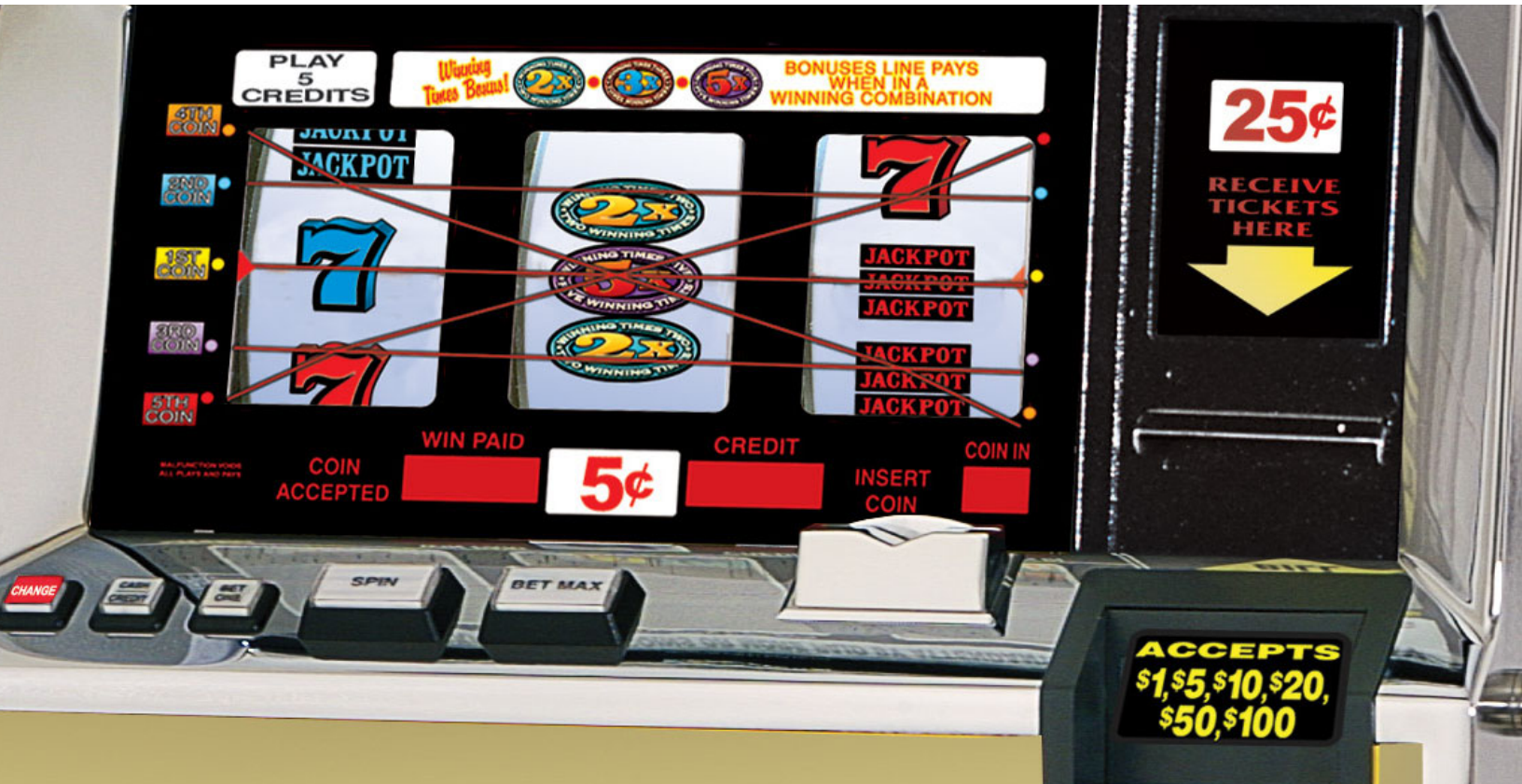

Slot Tech Editorial


Randy Fromm

Autumn is here and with it comes the annual Global Gaming Expo. If you're not a subscriber, you have probably picked up this copy of Slot Tech Magazine at the event. If so, welcome. Slot Tech Magazine is the gaming industry's only technical trade journal. We specialize in slot machine technology. Each month, we look at how things work and how to fix them when they don't. We'll introduce you to new systems and products as well. We'll even take you into the secret world of slot machine mathematics. There is a subscription form in the back of this issue.

As you can imagine, there are many things that occur behind-the-scenes at a magazine. One of them is dealing with advertising. The technical articles you read may be the brains of Slot Tech Magazine but advertising is its lifeblood. Without it, Slot Tech Magazine would be, er . . ., well, it wouldn't *be* at all to tell you the truth. Regardless, a trade journal without advertising would much less informative. The products and services you see advertised in trade journals are important to the daily operation of your business.

Or are they? Would you be surprised if you opened an automotive specialty magazine and saw an advertisement for a device that promised to boost your fuel mileage through the use of magnets strapped to your fuel line? Probably not. There are dozens of these (and similar) devices on the market. Would you be surprised if it worked? You probably would. I sure would be. Just because you see it advertised, that doesn't necessarily mean that it works.

As a magazine publisher, it's difficult to turn down advertising (lifeblood, remember?). But for all the wonderful things that you have seen in past issues of Slot Tech Magazine (technical articles, special events, new products and yes, advertising) one thing you have never seen is an advertisement for bill validator cleaning cards. This is not because no one has asked to advertise the product. They have. It is because it has been Slot Tech Magazine's policy to reject any advertisement that features bill validator cleaning cards.

Why the heck would I turn down advertising for a bill validator cleaning card; a product that is used every day in casinos around the world? Because, quite frankly, they just don't work as advertised and I refuse to peddle Snake Oil to the readers of Slot Tech Magazine. The optics in today's bill validators are either rounded or recessed. Cleaning cards cannot properly swipe the surface of the optic. Until now, that is. I have just one word for you - Waffle. Turn to page thirty.

I hope the G2E show is/was good for you. I'll see you at the casino.

Randy Fromm

Randy Fromm - Publisher

Randy Fromm's
Slot Tech Magazine

Editor
Randy Fromm

Technical Writers
Martin Dempsey
Kevin Noble
Herschel W. Peeler
Scott Reynolds
John Wilson

Advertising Manager
Dennis Sable

Slot Tech Magazine is published monthly by
Slot Tech Magazine
1944 Falmouth Dr.
El Cajon, CA 92020-2827
tel.619.593.6131
fax.619.593.6132
e-mail
editor@slot-techs.com
Visit the website at
slot-techs.com

SUBSCRIPTIONS
Domestic (USA)
1 year - $60.00
2 years - $120.00
International
1 year - $120.00
2 years - $240.00

JFET input Op Amps

- PLUS - Norton Amplifiers

By Herschel Peeler

Our first discussion of Op Amps emphasized op amps that were made completely of bipolar junction transistors (NPN and PNP). These devices have input resistances in the 100K to lower single digit megohms. As devices developed over the years these input resistances were considered too low. Ideally our op amp should have an infinite input resistance so the op amp does not load down the circuit we are connected to. Ideally, our op amp should have zero output resistance so we do not lose part of our output signal in the output transistors themselves.

Alas, the world is not perfect and the ideal op amp does not exist. However, by adding JFET transistors on the input stages of our op amps, we have input resistances up into the range of 1,000,000,000,000 ohms. (Yes, that's 1 x 10^{12} Ohms. Not perfect, but good.

Figure A shows a simplification of what the op amps look like. There is a lot of standardization on op amps in this generation of devices. Keep in mind that this does not describe all JFET input op amps, just the ones we are likely to find in the gaming industry. Other industries require higher standards and more specific and critical designs. Those described here are the most popular and cheaper. These devices often can be found priced at less than a dollar each. There are other devices with higher design characteristics that go for $10 or more each. The ones we will talk about are most of what you will find in gaming and the consumer market in general.

They may come one, two or four devices to a package. Just as the internal designs are similar, so are the pinouts of these devices and the characteristics. If you refer to the manufacturer's specs for these devices, you will find they differ slightly in qualifications. You should realize that each specific device might vary more in characteristics from one manufac-

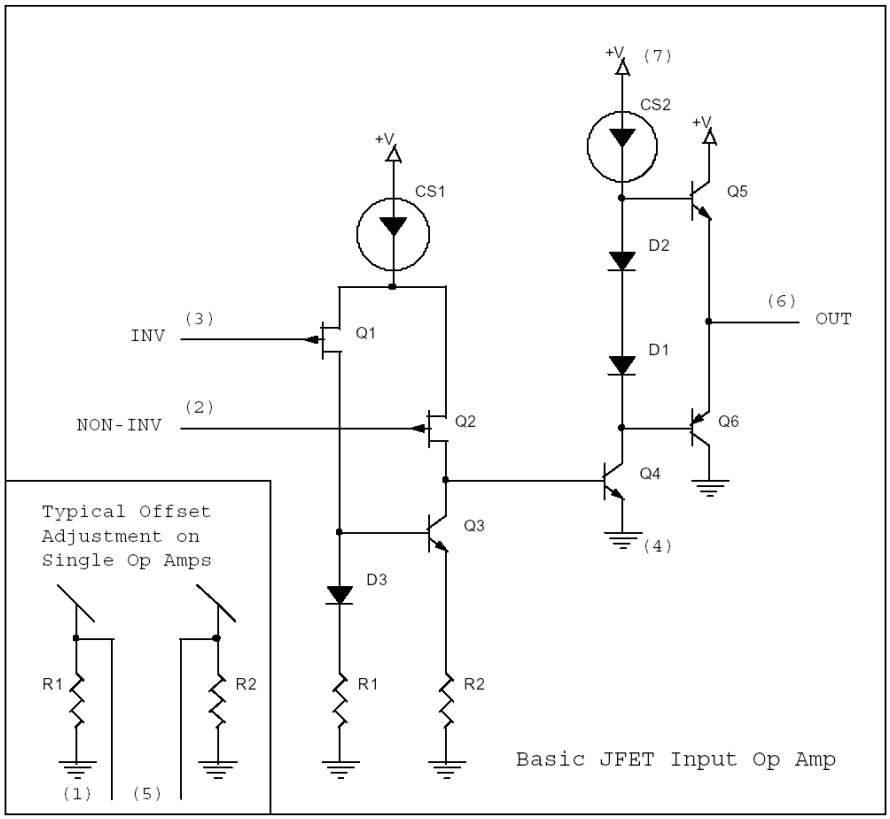

Name Brands You Can Trust

AudioSource® TENMA® STREAMLIGHT®
BUD Amphenol® RFX™ MCM AUDIO SELECT™
antennacraft MCM CUSTOM AUDIO
Belden ART APPLIED RESEARCH AND TECHNOLOGY NEUTRIK
RaXXess
GO.VIDEO® AUDIOPLEX TECHNOLOGY
TW Chemtronics
Labor Saving Devices, Inc.
PELCO CHANNELPLUS speco technologies
Channel Master® SENCORE
Thomas&Betts GOLD LINE MANUFACTURED IN U.S.A. SINCE 1961 PERFECT 10™
DEFENDER SECURITY™ WEST PENN WIRE/CDT
HAKKO SANYO Weller®
KEY-BAK Xcelite®

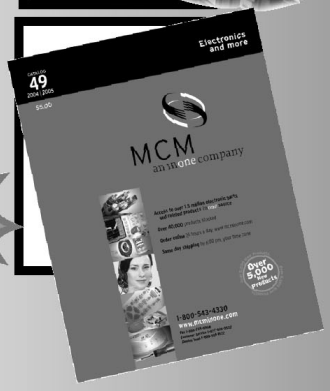

FREE CATALOG

- Over 40,000 Products Stocked
- Access to over 1.5 million electronic parts and related products
- Superior customer service
- Installer/Dealer Pricing Program
- Send us your quotes for quick response

call toll free
1-800-543-4330

or visit
www.mcminone.com/magazine

Announcing

Stellar Labs

- High quality audio-video interconnects
- Twisted pair, OFC coaxial construction
- Shielded metal connectors
- Available in lengths up to 150'
- Lifetime Warranty

Source Code ST18

MCM
an in one company

turing batch to another than between manufacturer's products. There is a degree of variation in the manufacturing process. It would not be uncommon for a manufacturer to make mass quantities of a given op amp. The devices are analyzed. Those with lower than usual noise are given one part number while with low offset are given another part number. Those with higher gain are given another part number and yet all are products of the same manufacturing process.

Companies that manufacture machines that mix the silicon and fabricate the ICs sell their products to various IC manufacturers so everybody's products are very much the same. The specs stated in the data books are a bit of sales pitch, as much as actual better devices. All devices are manufactured equal. They only change the specs to define what they call "Low Noise" or "Low Offset."

LF151
LF251 - LF351

WIDE BANDWIDTH
SINGLE J-FET OPERATIONAL AMPLIFIER

- INTERNALLY ADJUSTABLE INPUT OFFSET VOLTAGE
- LOW POWER CONSUMPTION
- WIDE COMMON-MODE (UP TO V_{CC}^+) AND DIFFERENTIAL VOLTAGE RANGE
- LOW INPUT BIAS AND OFFSET CURRENT
- OUTPUT SHORT-CIRCUIT PROTECTION
- HIGH INPUT IMPEDANCE J–FET INPUT STAGE
- INTERNAL FREQUENCY COMPENSATION
- LATCH UP FREE OPERATION
- HIGH SLEW RATE : 16V/µs (typ)

N
DIP8
(Plastic Package)

D
SO8
(Plastic Micropackage)

DESCRIPTION

These circuits are high speed J–FET input single-operational amplifiers incorporating well matched, high voltage J–FET and bipolar transistors in a monolithic integrated circuit.

The devices feature high slew rates, low input bias and offset currents, and low offset voltage temperature coefficient.

ORDER CODE

Part Number	Temperature Range	Package	
		N	D
LF351	0°C, +70°C	•	•
LF251	-40°C, +105°C	•	•
LF151	-55°C, +125°C	•	•

N = Dual in Line Package (DIP)
D = Small Outline Package (SO) - also available in Tape & Reel (DT)

PIN CONNECTIONS (top view)

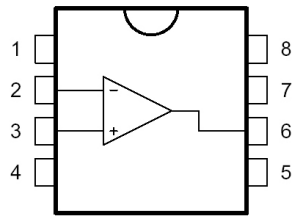

1 - Offset null 1
2 - Inverting input
3 - Non-inverting input
4 - V_{CC}^-
5 - Offset null 2
6 - Output
7 - V_{CC}^+
8 - N.C.

The operation of JFET input Op Amps is the same as for other op amps we have described. The same circuits are used. They work in the same way for the most part. What few exceptions there are we will try to mention here.

Most JFET input op amps that are one device to a package are all interchangeable. Usually, these devices have two extra pins that are Offset Adjustment options. The intention here is to have one member of the family that can deal with more critical applications where a small change in signal close to ground may be closely adjusted. A potentiometer connected between these Offset Adjustment pins may be connected to trim the values of the two sides of the Current Mirror at one end of the Differential Amplifier. In older devices like the LM741, this circuit was at the high rail (+V) and the wiper of the pot is returned to +V. The LF355, LF356 and LF357 were designed to be a close substitute for the LM741. Most of the newer JFET devices have the Current Mirror on the bottom rail (Ground) and the wiper of the pot is returned to ground.

These lists are by no means complete. I have only picked from those we find most popularly in this industry. For purchasing concerns, you need not stock all of these devices. If your boards use the LF411, the LF351 and TL081 (just to choose three at random) you need not stock all three. Stock the LF351 and use it for any of these on the same list. If in doubt, take

Keep Your Boss Smiling With AESI

SLOT MACHINE DOWN TIME COSTS THE HOUSE REVENUE & INCONVENIENCES YOUR CUSTOMERS. AESI MINIMIZES DOWN TIME BY PROVIDING THE BEST SERVICE THE GAMING INDUSTRY HAS EVER SEEN.

But don't take our word for it, let us prove it to you. There is one catch. You have to be using our products. Which, by design, are also the best.

- **PART SALES**
- **REPAIR SERVICE**
- **TECHNICAL SUPPORT**

Keep Your Boss Smiling...
Call AESI Today!

FutureLogic™ — Innovative Engineering for OEM Applications

kortek

STARpoint

mei

Service Coast To Coast

CALL CUSTOMER SERVICE TOLL FREE AT:
1 (866) 736-2374 (AESI)
www.gamingstuff.com

ADVANCED ELECTRONIC SYSTEMS INC.

Taking Care of Business

a close look at the circuit and see if there is any reason they might specify a particular device. For the most part (not always) the circuit will run with any of the others in the same list.

Single JFET input Op Amp with Offset Adjustment

LF411 LF351 TL031 TL051 TL061 TL071 TL081
LF355 (Offset pots returned to +V like the LM741, instead of Ground)
LF356 (Offset pots returned to +V like the LM741, instead of Ground)
LF357 (Offset pots returned to +V like the LM741, instead of Ground)

Dual and Quad JFET input Op Amps usually have those resistors in the Current Mirror trimmed during the manufacturing process. A laser cuts through the lower valued resistor to bring the resistance up to the same value as the higher one. This process isn't perfect but it's good enough to make a notable difference. Otherwise, all these devices are the same and interchangeable with one another.

Dual JFET input Op Amp

LF412 LF442 LF353 TL032 TL052 TL062 TL072 TL082

Quad JFET input Op Amp

LF347 LF444 TL034 TL054 TL064 TL074 TL084

LF153
LF253 - LF353

WIDE BANDWIDTH
DUAL J-FET OPERATIONAL AMPLIFIERS

- LOW POWER CONSUMPTION
- WIDE COMMON-MODE (UP TO V_{CC}^+) AND DIFFERENTIAL VOLTAGE RANGE
- LOW INPUT BIAS AND OFFSET CURRENT
- OUTPUT SHORT-CIRCUIT PROTECTION
- HIGH INPUT IMPEDANCE J–FET INPUT STAGE
- INTERNAL FREQUENCY COMPENSATION
- LATCH UP FREE OPERATION
- HIGH SLEW RATE : 16V/µs (typ)

N
DIP8
(Plastic Package)

D
SO8
(Plastic Micropackage)

DESCRIPTION

The LF353 are high speed J–FET input dual operational amplifiers incorporating well matched, high voltage J–FET and bipolar transistors in a monolithic integrated circuit.

The devices feature high slew rates, low input bias and offset currents, and low offset voltage temperature coefficient.

ORDER CODE

Part Number	Temperature Range	Package	
		N	D
LF353	0°C, +70°C	•	•
LF253	-40°C, +105°C	•	•
LF153	-55°C, +125°C	•	•

N = Dual in Line Package (DIP)
D = Small Outline Package (SO) - also available in Tape & Reel (DT)

PIN CONNECTIONS (top view)

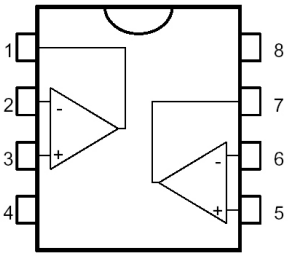

1 - Output1
2 - Inverting input 1
3 - Non-inverting input 1
4 - V_{CC}^-
5 - Non-invertig input 2
6 - Inverting input 2
7 - Output 2
8 - V_{CC}^+

In many applications, the JFET input Op Amps will be a drop-in substitute for the bipolar op amps as well. The LF351 may well substitute for the ever-popular LM358. The exception to this may be some circuits that are powered from both a positive and negative rail (instead of +V and Ground). This may not work in all cases. Wisdom is in knowing the difference.

Norton Amplifiers

A close cousin to the Operational Amplifier is the Norton Amplifier. Where the Op Amps we have described so far work on a difference between two voltages, the Norton Amplifiers work on a difference between two currents.

Figure 1 shows the simplified example of what the inside of a Norton Amplifier looks like. The inputs are applied to the bases of two NPN transistors. As such, the inputs will always look like an Emitter-Base junction of a transistor with an Ohmmeter. A current

Gen2™ VST (PSA-66V-ST2), Ideal for Slim Gaming Machines

Gen2™ (PSA-66-ST2), Prints a Perfect Ticket Every Time

4,000,000,000 Tickets Printed. Every Year.

Worldwide, *just one* manufacturer has more printers installed in cashless gaming machines than all others combined. With over 450,000 units installed, FutureLogic's printers are outputting over 4 billion tickets each year—and experience in design and manufacturing innovations that's light years ahead of the competition.

Major manufacturers including IGT, Atronic, Bally, Aristocrat, Konami, WMS Gaming, and others rely on FutureLogic to keep pace with their requirements for innovative solutions such as Tamper-Resistant Ticket™, Intelligent Ticket Handling™, promotional printing, and more.

When it comes to cashless gaming printers, don't gamble on *just anyone*. The smart money is on FutureLogic.

FutureLogic™

Innovative Engineering for OEM Applications

FutureLogic, Inc. / 425 E. Colorado Street, Suite 100 / Glendale, CA 91205 Tel 818.244.4700 x255 / Fax 818.244.4764 / **www.futurelogic-inc.com/DeepLink_18**

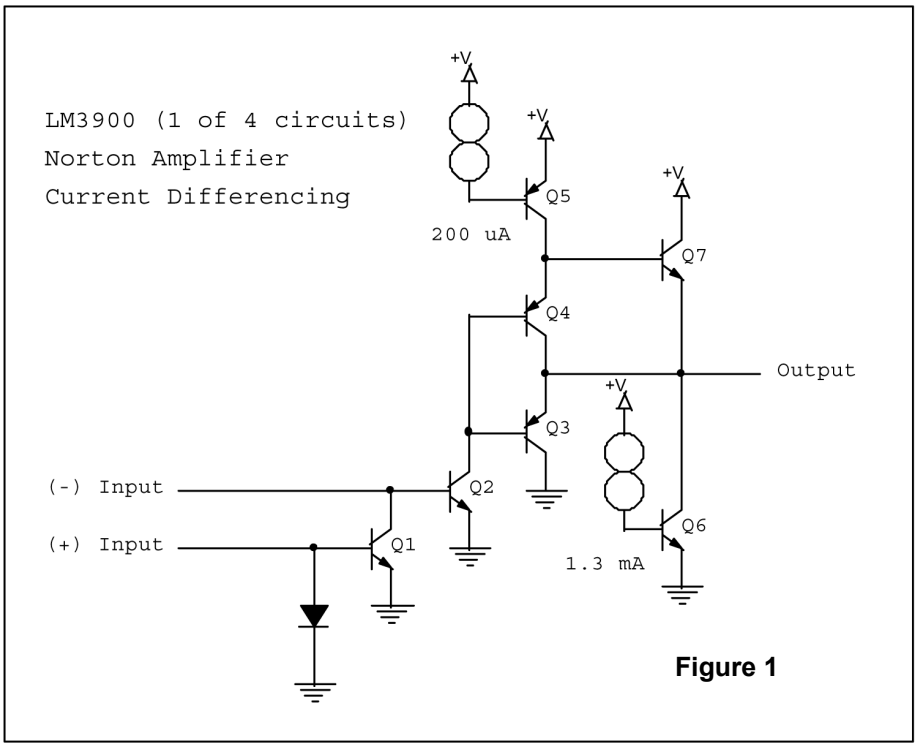

Figure 1

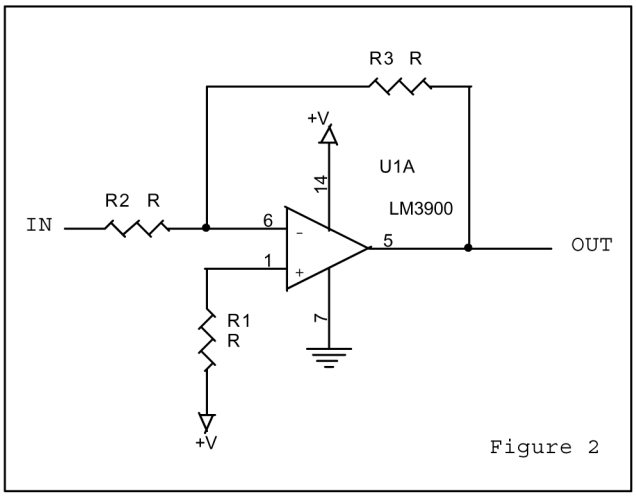

Figure 2

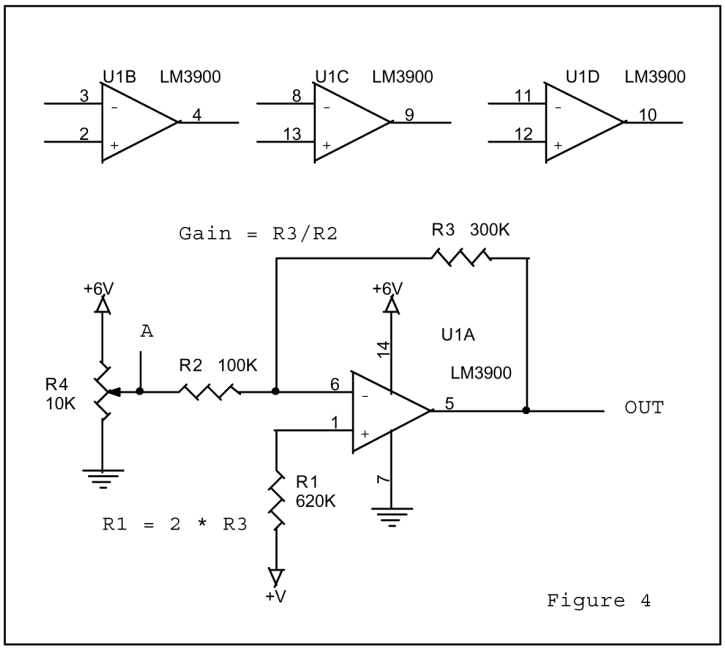

Figure 4

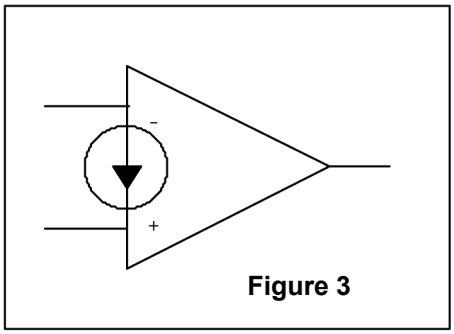

Figure 3

being pulled out of the Base of Q1 (the Non-Inverting input) is mirrored in Q1's collector. Q1 and the diode make a current mirror. The node at the collector of Q1 and the Base of Q2 is a mix of Q1's collector current and the current being pulled out of the Inverting input. The gain stage that follows is made of Q3 and Q4. Q5 is a constant current source. As Q2 conducts it turns on Q3 and Q4. This turns off output transistor Q7. This leaves Q6 conducting, giving a low out. As Q2 conducts less, Q3 and Q4 conduct less. This leaves the constant current source Q5 to turn on Q7, pulling the output high. The two constant current sources drive the output until the two currents mixing at the Inverting input are neutralized.

The Norton Amplifier otherwise acts just like any other op amp. Feedback and input resistors are constructed with the same result. Most anything you can do with any other op amp you can do with a Norton. The easiest way to identify a Norton amplifier is that the Non-Inverting input resistor is usually (not always) returned to the positive rail voltage instead of ground as shown in Figure 2. The

TechFest 10 - Excalibur Casino - Las Vegas, NV - Nov. 30 - Dec. 2, 2004

Make plans today to join the gaming industry's top engineers, technicians, technical writers and instructors for 3 days of technical seminars and presentations that will enhance your performance as a technician and dramatically increase your value to your employer.

TechFest 10 will be held November 30th through December 2nd, 2004 at Excalibur Casino Hotel in Las Vegas, Nevada. Registration fee for TechFest is $450.00 per person and includes lunch each day.

This is a technical presentation. The TechFest is geared for working slot techs and technical managers who are looking for a way to make a dramatic improvement in their understanding of video slot monitors, touchscreens, bill validators, hoppers and more with no-nonsense technical presentations from:

BE A BETTER SLOT TECH

- **Coin Mechanisms, Inc. - Coin Comparitors**
- **MEI - Bill Validators**
- **3M Touch Systems - Touchscreens**
- **Sencore - Test Equipment**
- **FutureLogic (formerly Seiko) - Ticket Printers**
- **IDX - Coin Validator**
- **Money Controls - Coin Validator/Coin Hoppers**
- **JCM - Bill Validators**
- **Ithaca - Ticket Printers**

Bonus Session - Slot machine creation, Bonus Games & PAR Sheets - Slot Math made fun and easy - presented by John Wilson
- PLUS - A special instructional series on video slot monitor repair presented each morning by Randy Fromm

Come and spend 3 days at TechFest. With engineering and technical representatives on hand from the gaming industry's leading suppliers of touchscreens, bill validators, coin comparitors, hoppers and monitors, YOU have a chance to ask about YOUR problems. You have a chance to get REAL answers to your questions, face-to-face with some of the most qualified technical experts in the industry.

TechFest is for slot techs of all skill levels, from novice techs who want to learn the basics of BV and hopper maintenance to advanced techs that need to brush up on monitor repair.

Visit the website at slot-techs.com
for more information

Space is limited - Register today!

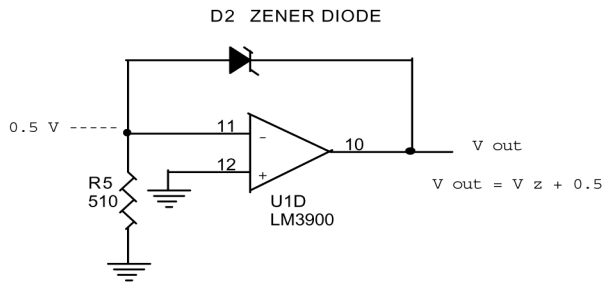

R5 sets the current through the Zener diode.

With V b-e of about 0.5 V at pin 11
a 510 ohm resistor causes about
1 mA of current to flow.

Voltage Reference Figure 5

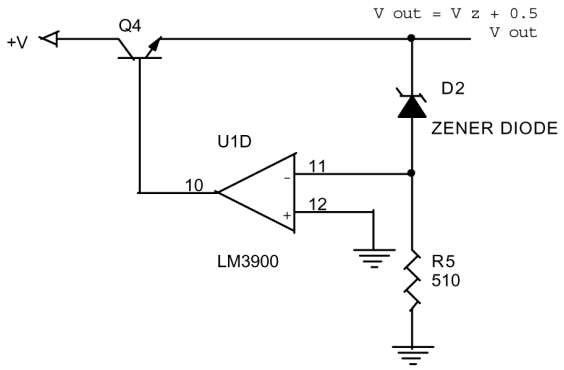

Output current is about the 10 mA (LM3900 capability)
times the current gain of the transistor.

Voltage Regulator Figure 6

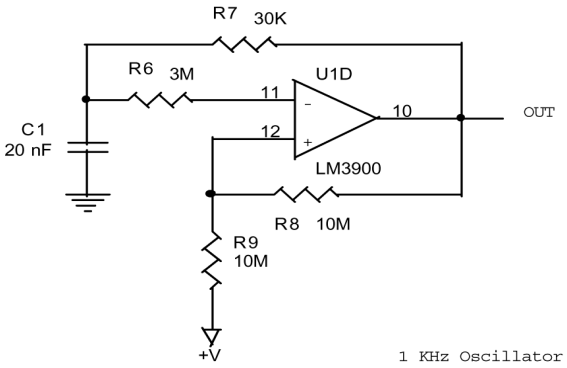

Figure 7 1 KHz Oscillator

Non-Inverting input being returned to +V certainly indicates a Norton, but there are Norton circuits that return to ground also.

The schematic symbol is much like the regular op amp. The proper schematic symbol includes triangle in a circle. Not all drafting programs use this convention. My OrCAD doesn't. Figure 3 had to made the hard way.
The LM3900 is a popular Norton amplifier used in gaming. There are four circuits per package. The LM359 is a Dual Norton. There are few members of this family and fewer still used in Gaming. The LM3900 is the most popular. The simplicity of these devices makes them fast.

Herschel Peeler
Hpeeler@slot-techs.com

Coin Mechanisms Inc. Celebrates 35th Anniversary

Coin Mechanisms Inc. celebrated their 35th anniversary in the gaming and amusement business with an outdoor barbecue celebration. The event took place on Friday, August 20th, 2004. The entire factory and office staff, along with several of Coin Mechanisms' long time suppliers and friends, were on hand to partake in the festivities.

"I am really proud of our accomplishments," said Stanley Pierz, President , as he addressed the crowd. " I thank everyone for all of their continued hard work, dedication and commitment to helping make Coin Mechanisms the company it is today."

Based in the Chicago suburb of Glendale Heights, Illinois, the Pierz family founded Coin Mechanisms, Inc. in 1969 with the 100 Series metal mechanical coin mech for the amusement industry. That lead to the development of the Model 3300 Coin Box with a Timer for kiddie rides. In the early 1980s, Coin Mechanisms, Inc. introduced the original Coin Comparitor, called the CC-10. The Coin Comparitor was a single coin, electronic coin mech designed for slot machines. The gaming industry quickly adopted it as the standard because of its speed of acceptance, accuracy and ability to reject fraud coins. The CC-10 evolved through all of the CC models, the IC, MC and today, the Defender.

The festival atmosphere took over immediately following Pierz's introduction as a bountiful, Midwestern feast of barbecued burgers, brats and chicken awaited the hungry crowd. As entertainment, some Chicago Blues and old time rock 'n' roll music, played by two of Coin Mech's own employees' bands, really made the afternoon groove.

Following the luncheon, a drawing was held for door prizes. Names were selected and gifts, donated by customers and suppliers, were distributed to everyone in attendance.

According to reports from attendees, a splendid time was had by all.

Slot Tech Magazine congratulates our friends at Coin Mechanisms, Inc. and offers best wishes for another 35 years of success.

Vice President Rhoda Pierz and President Stanley Pierz

Slot Tech Event

TechFest 10
Excalibur Casino
Las Vegas, Nevada

The world's largest gathering of slot machine technicians, TechFest 10 will be held in Las Vegas, Nevada at the Excalibur Casino. Dates for the three-day event are November 30 through December 2 2004.

"TechFest is for slot techs of all skill levels," said Randy Fromm, publisher of Slot Tech Magazine and moderator of the TechFest program. We have something for everyone, from novice techs who want to learn the basics of BV and hopper maintenance to advanced techs that need to brush up on monitor repair."

The event features lively and upbeat technical seminars from the gaming industry's leading technical instructors and OEM representatives. Participants include Coin Mechanisms, Inc., MEI, 3M Touch Systems, Sencore, FutureLogic , IDX, Money Controls, JCM and Transact Technologies. There will also be a special presentation on slot math by ICS Gaming and a daily morning session on monitor repair by Randy Fromm.

For more information contact:
Slot Tech Magazine
1944 Falmouth Dr.
El Cajon, CA 92020-2827
tel.619.593.6131
slot-tech.com

Transact Technologies'

New Ithaca® Brand Epic 950™ Gaming Printer

New Printer Delivers Benefits of "Epic Proportions"

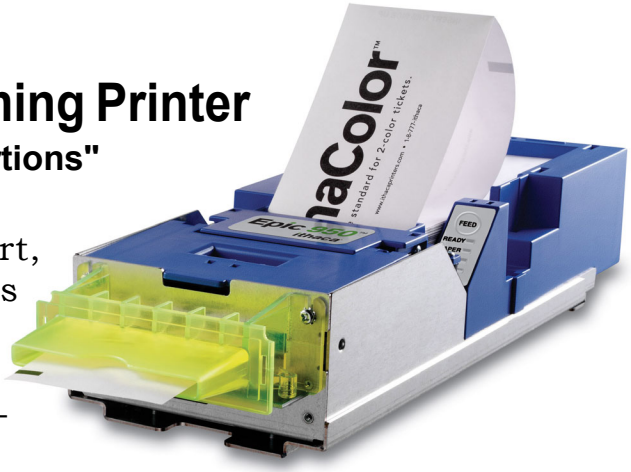

TransAct Technologies Incorporated has announced its new Epic 950 thermal gaming ticket printer. The Epic 950 introduces a host of new features and benefits. The company has studied the gaming market and developed intelligent, meaningful new technological innovations with impactful and practical relevance to OEMs, casino operators and slot technicians.

The Epic 950 features dual port capability to provide connectivity between the slot game and a casino's player tracking system, making real-time, customer-specific promotions possible right on the casino floor. Two-color thermal printing on ithaColor paper turns slot tickets into vibrant, eye-catching marketing vehicles for maximum impact and player retention. Extensive user-definable memory can be used to store graphics, fonts and character sets to provide countless ticket layout options. This memory can be accessed via the new imPort, a secure firmware and graphics download port, which facilitates easy graphics downloads as well as firmware updates.

TransAct also has developed TicketBurst technology to eliminate player interference and ensure maximum machine uptime by completing all printing operations before presenting the detached game voucher. The Epic 950 offers the same form factor and backward code compatibility with current industry standards in order to facilitate easy integration. Other features include HotSwap QDT (Quick Disconnect Technology) which enables easy printer exchange, even while the game is powered on, and USB capability for compatibility with games of the future. A smart suite of features and tools that includes proactive printer status and ticket print status reporting to the game is also included.

"We've been working closely with casino operators and OEMs to develop printers that provide the most powerful solutions for the gaming industry," said Jon Berkley, TransAct Technologies' Vice President and Business Manager of Worldwide Gaming. "We've got a winner of epic proportions with the Epic 950. The Epic 950 revolutionizes gaming printing by combining a number of advanced design features and technologies that address the current needs and future plans of casino operators all in one product."

Visitors can see and evaluate TransAct's new Ithaca brand Epic 950 printer for themselves at the Global Gaming Expo (G2E), Las Vegas, Booth #5853.

For further information, contact:

TransAct Technologies
7 Laser Lane
Wallingford, CT 06492
Tel: (203) 269-1198
Fax: (203) 949-9048

It would take a gaming printer of truly Epic proportions to turn the industry on its ear…

Consider today an Epic day.

The name is Epic because the printer is Epic.

Talk about a whole new way to look at the industry. The printer at the top of this page just leapfrogged to the top of the gaming world. Our new **Epic 950**™ printer is loaded with the most intelligent, most relevant combination of features available. No wonder the world's largest casino and world's largest casino operator rely on Ithaca® printers. Shouldn't you?

1. *2-color thermal printing on ithaColor™ paper turns slot tickets into vibrant, eye-catching marketing media.*
2. *imPort™, the secure firmware & graphics download port that simplifies upgrades & data download.*
3. *TicketBurst™ eliminates player interference for maximum uptime by completely printing and bursting the gaming voucher before presenting it.*
4. *A smart suite of features that includes proactively reporting printer and ticket printing status, useful tools and other intelligent features.*
5. *USB capable for compatibility with games of the future.*
6. *Dual port capability enables real-time targeted marketing to players by providing connectivity with the game and player tracking system.*
7. *HotSwap QDT™ (Quick Disconnect Technology) facilitates printer exchange, even with game power on.*
8. *Rugged metal chassis provides robust grounding design for high ESD immunity and optimal field performance.*
9. *Same form factor & backwards code compatible with current industry standards to facilitate easy integration.*
10. *Extensive 8MB RAM and 4MB Flash for printer operations and end-user definables, such as graphics, fonts and international character sets.*

Stop playing around. Demand the best.

Call your slot manufacturer's rep, or 8.777.ithaca (877.748.4222) or visit ithacaprinters.com

ithaca®
a product of TRANSACT

The Bonus - Part 3

The Big, The Bad and

By John Wilson

The alarm rings early on Tuesday morning and you drag yourself from bed. It was a late night and you'll be glad to see the weekend. It's not that the changes to the bonus game have been particularly difficult, just time consuming. In order to get a $1,000,000 bonus payout on a 25-cent game, it takes some careful work. The bonus game needs quite a number of possible payouts in order to "make up" the large jackpot. It's the secondary awards of $500,000 and $250,000 that create the real problem. "A million bucks," you mumble, as you look in the mirror. "A million bucks from a standalone quarter machine. We have banks of linked dollar progressives that don't pay that much."

Come to think of it, you can't picture any other standalone games offering a cool million, even on a dollar platform. But how in the world did they think they could cough up a half-mil or a quarter of a million dollars as well? Sometimes there's nothing that can be done but at least you have analysed it from all angles.

In the end, you think that you have come up with an idea that's going to work but you're going to need some clear direction from management before you can work out the fine details. You have reached a fork in the road and without a clear direction from management, you can only sit and wait. That's what this morning's meeting with upper management is all about.

You can't make the bonus game pay out the large payout awards too frequently but it must pay enough smaller amounts that the bonus game can be called frequently. With anything you do, there's generally a trade-off, and it's this trade-off that concerns you. You decide to wait until the V.P.s hear your presentation, wondering if you'll be starting over once more.

Max Millions (rev. 2)

Award	Award $	Combos	Factor	Contri-bution	% Contr.
4,000,000	$1,000,000	1	0.0000%	100.0000	53.12%
1,000,000	$250,000	1	0.0000	25.0000	13.28%
10,000	$2,500.00	1	0.0000	0.2500	0.13%
1,000	$250.00	1	0.0000	0.0250	0.01%
750	$187.50	996	0.0249	18.6750	9.92%
500	$125.00	700	0.0175	8.7500	4.65%
200	$50.00	700	0.0175	3.5000	1.86%
100	$25.00	900	0.0225	2.2500	1.20%
75	$18.75	4700	0.1175	8.8125	4.68%
50	$12.50	8000	0.2000	10.0000	5.31%
25	$6.25	8000	0.2000	5.0000	2.66%
20	$5.00	8000	0.2000	4.0000	2.12%
10	$2.50	8000	0.2000	2.0000	1.06%
TOTAL		40,000	1.0000	188.2625	100.00%

SENCORE

Gaming Service Bench

www.sencore.com

email:sales@sencore.com

Invest in this gaming bench and receive 3 days on-site training.

Call Don (x364) or John (x264) for details.

1.800.736.2673 or

1.605.339.0100

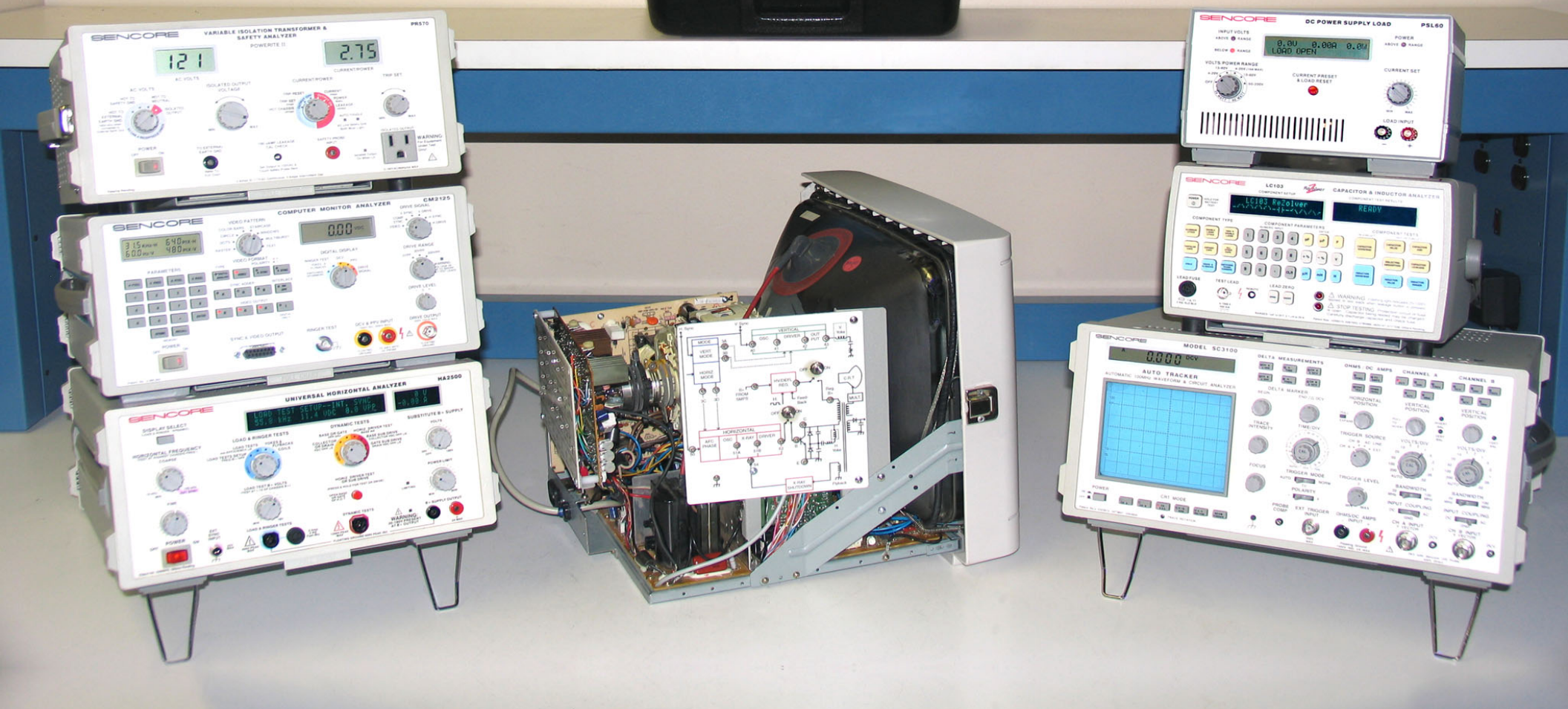

When you arrive in the boardroom, a few of the V.P.s are already there, chatting in a corner. The room goes silent when you walk in and every eye shifts in your direction. You breathe a sigh of relief when you see the look of pleasant anticipation on their faces, though.

After a no-foam latte, everyone has assembled in the boardroom and you begin. After the initial pleasantries are out of the way, you're a little surprised that there are no questions for you. At the end of yesterday's meeting, you had covered the payout of the bonus game. Some questions were raised about how it works in the base game and an examination of the base game is supposed to happen today. If the board accepts your changes to the bonus game payout, then you can do that. However, there's still more to work out before the game is complete.

You start the meeting by showing an image of the Max Millions bonus game on the large screen (figure 1). It's basically the same as the one you used in yesterday's meeting but updated to allow for a million dollar top award. "The math for the revised bonus game is complete.

"I have been able to incorporate the larger jackpot award, namely an increase from 250,000 credits to one million," you explain. "But the smaller jackpot amounts have created a problem. I have revised the pay schedule and will show you the revised version today. The three top bonus jackpots which you suggested total 7,000,000 quarters when combined!"

Obviously, we don't want to pay these awards too frequently but we still need to pay out a reasonable bonus award when the bonus game is started. In order to pay out these large awards, we needed to increase the bonus game cycle to around 200,000 games. When combined with the base game, the overall cycle increased to just over 58 billion games. That was clearly too much!

"I calculated the frequency of the $1 million jackpot payout at 425 years," you continue. "I took the liberty of changing some of the top awards, just so that we can get a reasonable payout and make it work. This reduces the top awards to just over 5,000,000 coins."

Although it doesn't sound like much, it was necessary in order to lower the amount of the bonus payment. It still gives us the "Million Dollar" ability in the bonus game.

One of the suits interrupts.

"Other than reducing the size of the bonus game payouts as you have done on the chart you're showing us, is there any other way to make this feasible?" he asks.

"Oh, yes," you answer. "We could have large payouts as well as a higher average payout. Perhaps we change the average bonus game payout from 200 credits to 1000. It would mean that we couldn't have the bonus game happen as frequently, though. Our requirements were for the players to receive the bonus game frequently. In order to make this happen, we had to reduce the average payout amount. Quite simply, large payouts mean a lower frequency of payment. Small

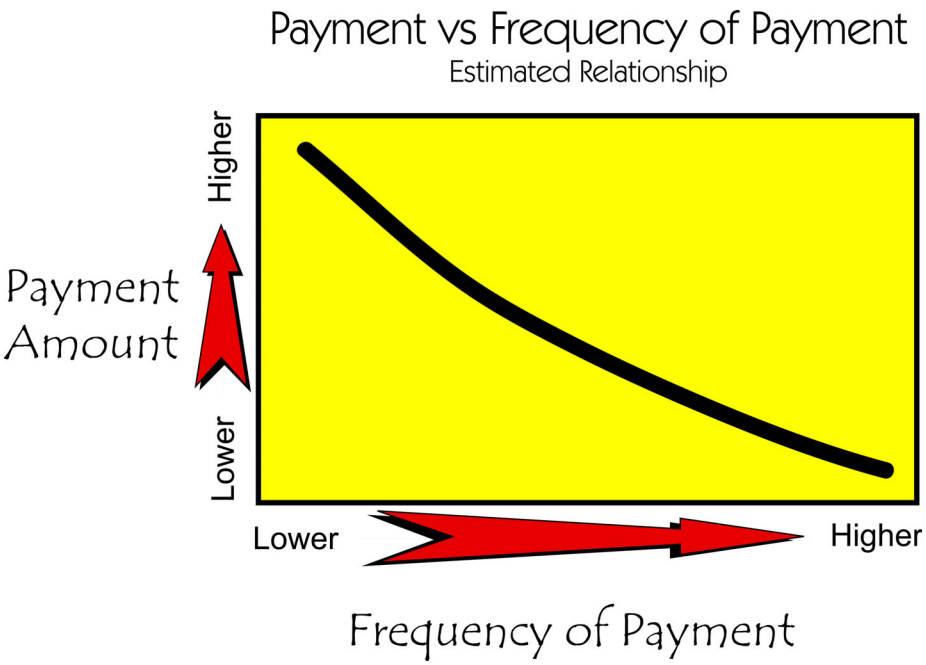

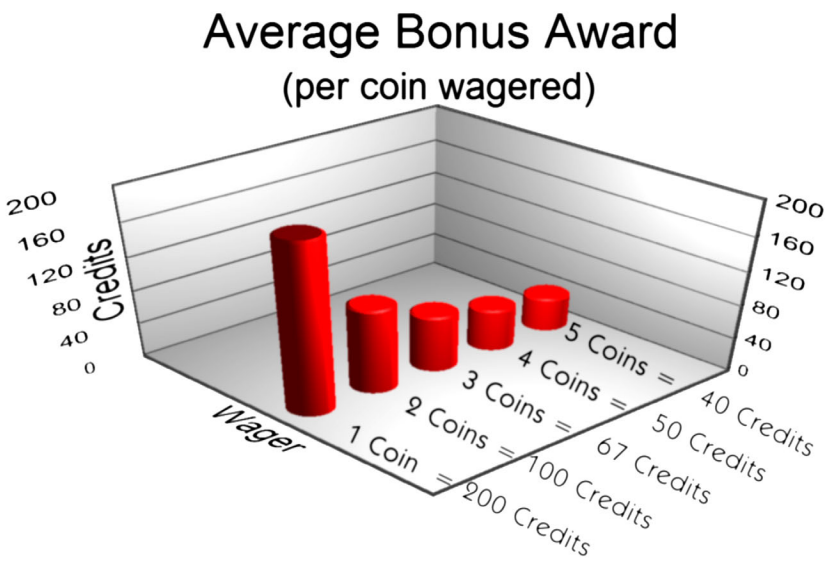

payouts mean a higher frequency of payment. The graph (figure 2) illustrates the relationship. Consider it this way: We have three options: Large bonus payouts, Frequent Bonus Game play, High Average Payout amount. Pick any two; you can't have all three!

We could also change the number of coins required to hit the bonus. If we made this a 5-coin game, then we're taking in more credits per game.

"Would this not be the same?" the suit asks. "I mean, if we pay out 10 credits for 1 coin, then we pay out 20 for 2, and 50 for 5. Aren't we just multiplying the payout? How will this actually change the average payout?"

Although the assumption is correct for the base game, we can change this for the bonus game. The bonus game would only be activated with maximum coins-in; 5 coins played. The base game payouts would be multiplied by the coins in but the bonus game would not be. If we have an average bonus payout of 200 coins, then for 3 coins the bonus game pays 200/3 = 67 credits per coin wagered. For 5 coins, it's only 200/5 = 40 credits per coin wagered. We end up collecting a little bit more on each game so that it allows us to pay out more.

"I see," replies The Suit. "If we look only at the top award, $1,000,000, how does it affect the game? In other words, if we took the configuration for the bonus game you are showing us right now, and reduce it to $250,000 then what would happen to the average payout from the bonus game?"

By reducing the payment as you suggest, the results would be quite significant. In our current setup of $1,000,000, that payment accounts for roughly half of all money paid by the bonus game. By making a few minor changes, the amount varies from 50% to around 53%. The average payout in the 40,000 game cycle is 188 credits. By changing the top payment to $250,000, then almost 28% of the payout is from the top award and the average payout drops to 91 credits. Because the amount of top

award is so large compared to the rest of the awards, changing this value makes a significant difference.

"Does that mean that the volatility index of the bonus game would be fairly high?" asks The Man in Armani.

"Yes, it does," you reply. "We haven't calculated the exact figures yet, but with the large range of payouts, the game will be fairly volatile."

"When we look at the overall game, we multiply the base game cycle by the bonus game cycle, divide by the number of times it's called from the base game and that gives us 78 base game cycles. With 262,144 games in a base cycle, we're looking at just over 20 million games between top bonus jackpots. In theory! Based upon projected play levels, every 78 years. The odds of winning this jackpot are the practically the same whether or not you play the game!"

"The Gaming Commission is not likely to approve such a low frequency payout," adds Larry. "With this in mind, we have come up with a compromise. We think it will work."

"What is the real problem we're looking at?" asks the V.P. of Marketing. "Why can't we make these large jackpot amounts work? Can't we just determine the average payout of the bonus game and then just add the bonus game to the base game?"

The Budget

Larry agrees to field this question. "The real problem is the platform. By having a standalone bonus game, we have coin-in contribution from only one machine. If we link them together, we have coin-in from a number of machines and the bonus game is linked like a progressive. Think of the Blazin' 7 game. We can put a 6,000 credit to jackpot award in it and that pays out 9.9% of all coin-in. To make the top award 4,000,000 credits, the second award 1,000,000 and the third 250,000 then we're paying out a lot of money in a few games. It's a matter of budgeting. With linked progressive jackpots, we have quarter machines increasing their jackpots from perhaps $250 to $100,000 up to $250,000. On dollar machines, we might end up paying out $25 million.

When we design a slot machine, we're basically setting up a budget for the machine. A certain amount must be held back, in order to pay for staff, building utilities, etc. This is the amount of money that the casino is expected to make from the machine. It might be less than 1% or it could be as much as 20%. It depends upon the gaming commission, the appeal of the game and how it fits into the casino's plan.

Larry continues, "By considering the obstacles we face, we have gone back to the basics and started with the Blazin' 7s game and worked forward. The basic game will work on a 3-coin multiplier

base, integrating the bonus game. We have increased the overall bonus game cycle, but have maintained a reasonable payout.

What is left is returned to the player. We have anywhere from 99% down to 80% being given back. The game design considers how we want this to be given back. How frequently do we pay? How much do we pay? If we want a million-dollar jackpot, it must fit into the amount that is paid out. It is possible that we try to pay out too much. In order to make it work, we lengthen the period of time that we pay this out. It's like trying to save for a holiday. If we only have $100 a month to put away for the trip, we can't go very far in a month. If we wait for a year, we can go on a nicer trip. After 10 years, we would have a trip that would be quite memorable. The problem is that it takes 10 years to wait for the trip. People don't like to wait, especially when playing slot machines. The players are fickle and if they have to wait too long for a win, they'll move on. Sure, the pay might be very large but to them, it's not worth the wait.

To answer your second question, on the simplest level, we do calculate the average payout of the bonus game and put this into the base game. However, just like the base games, there must be a factor to make it reasonable. We could have a 3-reel game with a 90% payout and a trillion dollar jackpot that is never paid. That's not fair and it won't take players long to find this out. If we implement the million dollar jackpot in our bonus game but pay it out every 78 years, we've opening ourselves up for customer dissatisfaction that's likely to spread into our other games as well.

The bonus game average payout has actually decreased, from 200 coins to 188 (average). This means that the bonus game, on average, pays out less than it did before. Our big problem right now, is to have to top award pay out frequently enough for it to be accepted by the gaming commission."

"Here's a brief overview of what we've discussed," you say and with a few keystrokes, you start a PowerPoint presentation summarising the bonus game theory. "I would like to review this information before we consider the base game as well."

Bonus Game Summary

- The bonus game is like any other payout to the base game. - Consider a regular payment: Three Cherries pays out 100 credits. - The bonus game might pay out 20 credits, or it might pay out 4,000,000 credits. - We look at every possible payout from the bonus game, add them together, then get the aver-

age by dividing by the number of combinations. - This average is the amount that the base game pays out. E.g.: 200 coins on average. - The larger the bonus payout, the higher the average payout will be. - If we can't increase the average payout, we need to increase the number of combinations. - However, if we increase the number of combinations, then the cycle increases.

The key to integrating the bonus game is to work out the average payout. That's the primary goal. However, there is a secondary consideration. The bonus game has it's own 'cycle' that relates to the base game cycle. If the bonus game cycle is fairly low, then we pay out every possible bonus game combination in a reasonable amount of time.

However, if the bonus game cycle is too large, we have a configuration that might never pay out all combinations. If the bonus game needs 475 years to run though all possible combinations, then it's just not reasonable.

"In summary," you add, "there are a number of factors that we have to consider prior to completing the bonus game. I have summarised them on the next slide."

- Average payout. 160.- 200 (ok now) - The largest payout ($1 million on a standalone quarter) - Number of coins in base platform - How does it affect base game (i.e.- max coins = bonus game, what about min. coins?) - 3 symbols = bonus game, what about 1 or 2? - Does this cause the 1-coin hit frequency to drop?

As you can see, we're at a point where we have to make some hard and fast decisions. From there, we can work out the fine details of the overall game. The V.P.s sit quietly for a few minutes, considering their options. Finally, Armani speaks:

"We wanted to have a bonus game that offered a cool million dollars top award on a 25-cent stand-alone platform. Taking whatever route you want, can you do this for us? If we give you complete freedom over what payouts there are, the hit frequency and anything else you need to consider, can you make it happen?"

You think about this for a few minutes. While the V.P.s exchange cautious whispers between themselves, you visualise probability tables, formulas and calculations and think about the Blazin' 7s base game. You give the group a resounding YES!

"Very well, then." replies The Suit. "Let's reconvene here first thing Monday morning. Use whatever resources you need and make this happen. We'll expect some good news on Monday!"

Free Software - Again.

"Before we adjourn," you add, "I'd like to hand out a CD to everyone here. It contains a beta-version of the bonus game that you can use on your computer. You can play the bonus game and see how it works for you. It will give you a general feel for how the payouts will work and how the game will feel. Once we make some final decisions, we'll include a simulation mode to show the number of base games required to activate the bonus game and how the overall payouts work out."

Note: a copy of this software is available on Slot Tech Magazine's website at slot-techs.com

Next month, we'll examine the changes to the base game PAR sheet and have yet another piece of software for you [Does the fun never end?]. It allows you to simulate the base game and the bonus game and see the statistics of both games (games played, etc.)

- John Wilson
jwilson@slot-techs.com

"On behalf of Table Mountain Casino I just wanted to express our thanks to you and your team. I couldn't have asked for anything better."

Brian Rankin - Slot Technical Manager

On-Site Slot Tech Training
Customized Classes Available

Randy Fromm's Casino School is a practical, no-nonsense look at how gaming machines work and how to repair them when they don't. **No previous knowledge of electronics is required** to get the most out of the school. The Casino School is geared for those who want to learn how to fix gaming devices without having to learn complex electronic theory or purchase expensive test equipment.

Be prepared for six hours of accelerated learning each day. Class begins at 9:00 am sharp each day and continues until 4:00 pm. The Casino School provides each student with reference materials and troubleshooting guides that will be valuable aids for repairing equipment on location and in the shop.

Students learn how to work with:

THE DIGITAL MULTIMETER

This relatively inexpensive piece of test equipment is easy to operate. Casino School students learn to use the digital multimeter to perform tests and measurements that will pinpoint the cause of a failure down to a single component.

ELECTRONIC COMPONENTS

The individual components used in games are introduced. Parts such as resistors, capacitors, diodes, potentiometers and transistors are covered individually. Students learn how the components work and how to test them using the meter.

SCHEMATIC DIAGRAMS

Schematic diagrams are the "blueprints" for electronics. Learning to read schematics is easy once you know how the parts work!

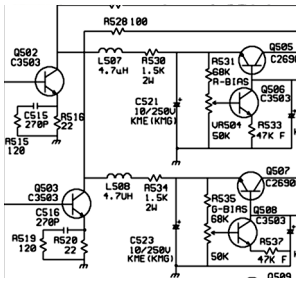

POWER SUPPLIES

Power supply failure is a common complaint in many different types of systems.. Power supply failures are discussed during the class, along with shortcuts for troubleshooting and repairing them.

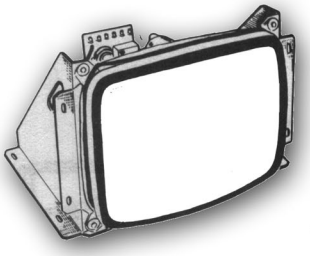

MONITOR REPAIR

The monitors used in video slots are designed for quick, easy, and safe repair. Students will learn the theory of operation of all types of monitors and how to repair monitors down to the component level. Of course, monitor safety will also be discussed.

You do not have to send your slot techs to Las Vegas or Atlantic City for training. The Casino School brings the training to you. Contact Randy Fromm's Casino School today to reserve a date for your tech school

Randy Fromm's Casino School 1944 Falmouth Dr. El Cajon, CA 92020-2827
tel.619.593.6131 fax.619.593.6132 e-mail CasinoSchool@slot-techs.com
For a complete brochure, visit the website at: slot-techs.com

Microcoin QL
A Total Solution

The Microcoin QL has emerged as an ideal product for the Gaming industry, where its high speed accept rate and ability to store up to 12 pre-programmed coins or tokens, has revolutionized the market.

As previously reported in Slot Tech Magazine, this fully secure electronic coin validator solution has recently been selected by IGT, the world's largest Gaming machine manufacturer, as its new default small coin validator for the huge US domestic market, with other markets to follow

Essentially, the Microcoin QL offers 12 single coin solutions in one Model, with the powerful benefit of "toggling" between coin denominations in the field so that you can move, say, a 25c QL into a 5c machine quickly and easily, without having to go back to the workshop.

You can also change coin sensitivity settings, conduct some diagnostics or just check your QL settings right at the machine.

All this is done by the Casinomate handheld diagnostics terminal, which is designed for the rigors of a technician's toolbox.

But don't think that you can get away with playing with the Microcoin QL. These units time/date stamp every transaction and cannot be erased. Ultimately, you will need to download your Casinomate data to a PC-based audit and tracking program called TRACER.

When you connect your Casinomate via a specially provided cable, TRACER will automatically extract all the data and store it in a secure database. From there, reports can be run to view information on usage by User ID or QL Model, for example.

TRACER is designed to allow the Casino to manage its own population of Microcoin QL acceptors. You take the responsibility to assign an administrator, who then sets up the TRACER database, registering the Casinomates and assigning up to 20 Users to a Casinomate, each with his or her own PIN.

With this in place, you cannot change anything with the Microcoin QL without there being a record of your activity.

Combined with its Casinomate handheld device and TRACER audit module, the Microcoin QL offers the most modern, user friendly and secure Gaming package for coin acceptors.

For further information, contact:
Astrosystems
4210 Production Court
Las Vegas, NV 89115
(702) 643-1600
www.microcoin.com.au

Microcoin®

Heber at G2E

Pluto 5, 6 and Firefly X10 Development Kits on Show

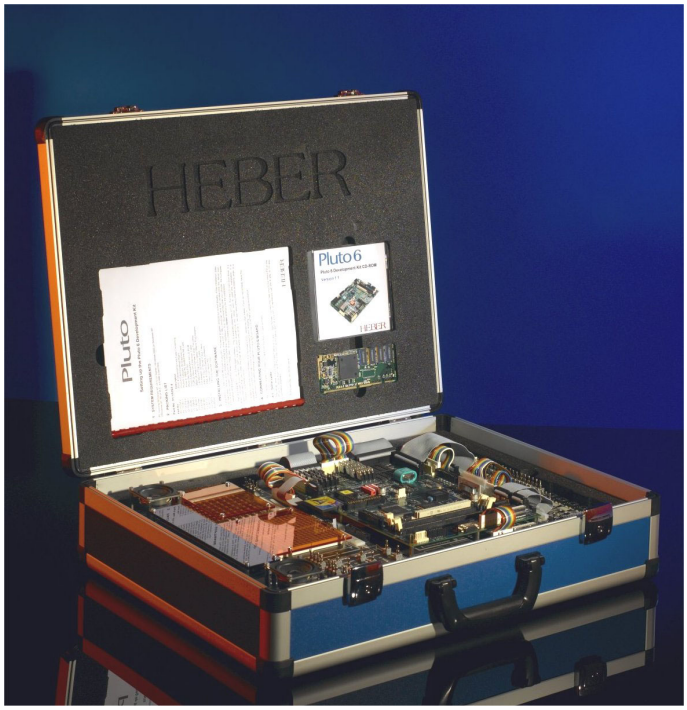

Heber Limited will be exhibiting at Global Gaming Expo, G2E 2004 (Las Vegas, October 2004) and will be displaying products from both their Pluto embedded and Firefly multimedia electronic gaming platforms.

The Pluto 5 and Firefly X10 Development Kits will be on show, along with the recently launched Pluto 6 kit. Heber Development Kits are designed to ease the initial development process on either platform, allowing a quicker time to market. They contain all of the hardware and software needed to create, develop and test your game on one evaluation system.

'G2E is an excellent showcase for us to display our ever growing range of electronic control systems,' said John Malin, International Sales Manager. 'Having both of our main product ranges on display, in the form of their development kits, allows us to show how easy it is to develop on either our Pluto or Firefly platforms.'

Heber's core market is in the design, development and manufacture of electronic controls for the amusement industry. From 20 years experience within the marketplace, Heber has created the Pluto range of control systems, which is in use by major manufacturers with over 250,000 machines world-wide.

The Calypso range of video cards have been designed to interface with Pluto 5, Pluto 5 Casino and Pluto 6 and add high performance graphics to spin reel machines.

The Pluto range is supported by two Development Kits, which provide the ideal test environment for either the Pluto 5 / Pluto 5 Casino or the Pluto 6 Control Systems.

Heber Limited also offers the Firefly range of boards. These are ideal for use in high performance video games and terminal applications. Based around PC technology, the Firefly boards offer performance and flexibility, supported by longevity of supply normally missing in PC hardware. The most recent additions to this range of boards are the Firefly systems, comprising of the Firefly 700 base board and all other components (such as a processor, a hard drive etc) required to get a machine up and running.

For further information about Heber Limited visit www.heber.co.uk
phone +44 (0) 1453886000.

Waffle Technology

Slot Tech Lab Reports A-OK For New Bill Validator Cleaning Card

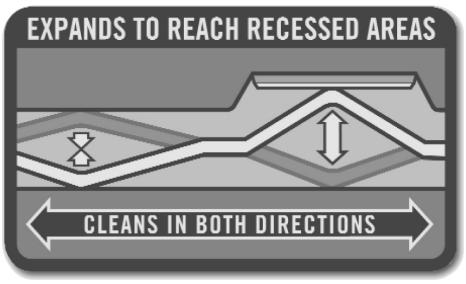

Bill validators, also known as bill acceptors, have been in use for decades now. Early uses were restricted to low-denominations such as in the vending industry where initially they had the ability to validate and accept one-dollar bills only. Industrial vending items (sandwiches, soup, canned stew, etc.) cost more than candy bars and so the BV manufacturers soon added five-dollar bills to the repetoire. Higher denoms weren't required as the likelihood of anyone needing to deposit more than five dollars into a vending machine is pretty small.

Validating these low-denomination bills is easily accomplished through the use of a magnetic head. As the banknote passes through the unit, the mag head rubs against the bill and reads the pattern of the magnetic ink that is used in US currency. The unit then compares it to the pattern that is stored in memory and if it's close enough, you get your Snickers bar.

All that rubbing of dirty money meant that dirt would build up on the mag head and so the Bill Validator Cleaning Card was born. It's a simple matter of soaking an absorbent card in cleaning solution of some sort and passing it through the unit. As the mag head is rubbed by the card, the dirt is cleaned off and you're in business.

High-Denom

Enter JCM and the embedded bill validator. The geniuses at JCM had the idea that maybe, just maybe, slot machines players don't really love feeding coins and tokens in to slot machines and that it would be easier and faster - and more profitable for the casino - if a bill validator could be introduced into the machine. It seems like a no-brainer in hindsight but at

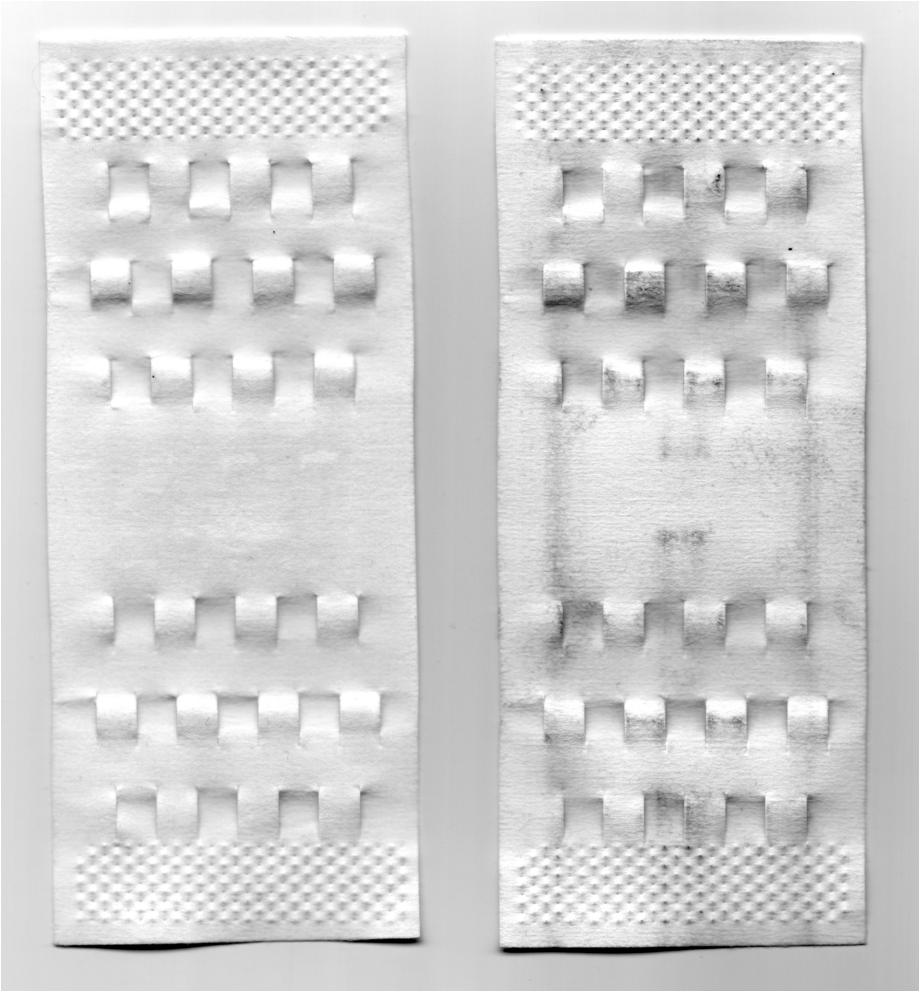

This is what the cleaning card looks like after a single pass through the bill validator during the lab test. A clean card is shown on the left for comparison. Notice the large accumulation of black on the raised pads of the card.

Dirty Readers & Bill Acceptors Cause Failed Transactions!

The consistent use of Waffletechnology™ cleaning cards significantly increases the reliability of card readers and bill acceptors.

Features & Benefits

- The only card that cleans the entire surface of rounded read heads and recessed lenses.
- Unique "Independent Suspension" dramatically increases cleaning pressure.
- Cleans other surfaces traditional flat cards cannot touch.

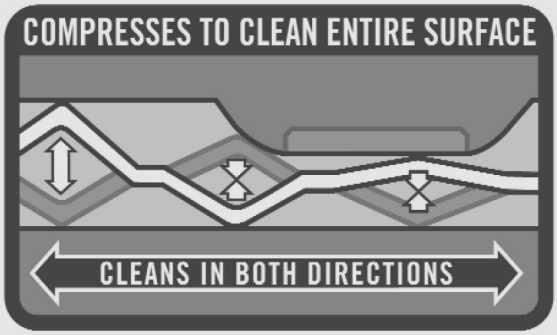

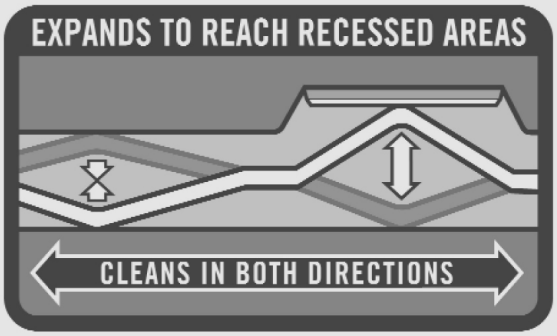

For detailed technical information and endorsements visit **waffletechnology.com**

RECOMMENDED FOR:

• POS Terminals • Swipe ATM's • Hotel Door Locks • Time/Badge • Pay at the Pump • Player Tracking • Airline Check-in Kiosk • Many Other Applications

PO Box 1120
Auburn, ME 04211-1120
Phone 800-818-1932
207-514-7030
Fax 207-514-7033
www.kicproducts.com

the time, this was a revolutionary idea.

But this could not be an ordinary bill validator. Magnetic detection could never offer the degree of security required in a casino. We're not selling candy bars or Dinty Moore Beef Stew here. We're talking about real money, with the ability to accept bills with a value of up to $100. This would require a new Bill Validator design and the folks at JCM were just the people to provide it with optical recognition and validation. Instead of using only a magnetic head, a complex system of optics would be added in order to read the bill and verify its authenticity. Unlike a mag head that must actually touch the bill in order to read it, the optics must ***not*** touch the bill as it passes through the unit. If they did, they would soon scratch and become useless. The optics are slightly recessed so that they come very close to the bill but do not actually touch the surface.

All of this history is a very long wind-up to the actual point of this discussion which is this: The new optical system works fantastically well as casinos around the world well know. Slot machines with bill validators quickly outperformed those without them. Unfortunately, the cleaning card manufacturers have continued to market the same cleaning card to the gaming industry as the one used in the vending machines; a card that is now all but useless as it passes over the recessed optics without touching them at all. Sure, anyone using such a cleaning card will see two dark, parallel skid marks on the card as the dirt from the transport belts is rubbed onto the card but the belts aren't our concern. Our concern is cleaning the optics and those flat cards get a big, fat "F" for failure in that department.

New Paradigm

Unlike flat cleaning cards, WAFFLE TECHNOLOGY™ cleaning cards incorporate flexible, raised cleaning platforms on both the top and bottom surfaces. These cleaning platforms are essentially spring loaded, dramatically increasing the pressure applied throughout the cleaning process. These raised platforms, due to their shape and flexibility, also access critical components that flat cards cannot touch. The recessed sensors of most bill validator machines and the rounded optical lenses of card readers can only be thoroughly cleaned if you can touch them and the WAFFLE TECHNOLOGY™ cleaning cards do just that.

In order to test this new technology, Slot Tech Magazine received some samples of the new product from the company and set off for nearby Sycuan Casino in San Diego in order to test them. The was just one goal for this test: To determine if the cleaning card could reach and clean the recessed optics in JCM's popular WBA bill acceptor. That is ALL we set out to determine.

The test was simple. A WBA head was opened and the recessed optics were opaqued with a black, dry erase marker pen. This produced a thin film that was highly visible but could easily be wiped off in order to verify that the cleaning card has made contact with the recessed optics. If the Waffle card works as advertised, the optics should be wiped clean and the black ink should show up on the cleaning card.

And work it did. After just a single insertion (which is, of course, a double pass across the optics as the bill is first pulled into the unit and then rejected) the head was opened and the optics examined. They were clean. You can see from the photograph that the ink had been transferred to the card. An unused card is shown for reference so that you don't mistake shading for dirt. The image was created by laying the two cards on a scanner and has been contrast-enhanced for clarity.

For more information and a neat little animation showing WAFFLE TECHNOLOGY in action, visit the website at waffletechnology.com

- Slot Tech Magazine

You're Grounded!

Voltage measurement is one of many diagnostic techniques used by electronic technicians. Taking a voltage reading at the output of a low voltage power supply is likely the most common voltage measurement you'll make while working on slot machines but there are many others. You may need to check the B+ voltage or make one of a dozen other voltage measurements in a monitor. Are you getting power to an inoperative solenoid? You might need to measure the voltage to see what's going on. Is your sound dead? Maybe you'll need to test the supply voltage of an audio amplifier.

Potential Difference

When you take a voltage reading at a test point, you are not actually measuring the voltage at a single point. In fact, you can NEVER make a voltage measurement at one point. Voltage is actually defined as the "potential difference" between TWO points. Here's the deal:

When an aircraft pilot calls his altitude in to an air traffic controller, he doesn't give his altitude above the ever-changing terrain below him. Instead, he uses sea level as a reference point. The difference (in feet) between sea level and where the airplane is flying is the aircraft's altitude.

It's the same with electronics. When we take voltage readings while repairing electronic circuits, we have to establish one point as a reference point and take our voltage readings with respect to that point. We call this reference point "ground." Ground is the 0 volt reference point in electronics and we make ALMOST all voltage measurements with respect to ground.

Figure 1

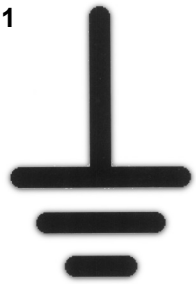

Earth ground

One type of ground is known as "Earth ground." The Earth ground is just that. It's a connection to the earth itself, through metal rods or water pipes that are buried in the ground. The first commercial use of the Earth ground came with the telegraph, where ground was used as the return path for the telegraph circuit. This meant that they could run a complete circuit with just one wire, a considerable savings when you're stringing copper all the way across the country.

You are familiar with Earth ground as the small, D-shaped hole in an AC receptacle. In North America, this is connected to the green wire that is connected to the Earth ground somewhere. Typically, this is near the circuit-breaker panel.

The schematic symbol for Earth ground is shown in figure 1. The ground symbol always forms an arrow that points toward the bottom of the schematic diagram, as if it was pointing toward the ground.

Figure 2

Chassis ground

Chassis Ground

There is another type of ground. It's called "chassis ground." Chassis ground refers to a common, zero volt connection between electronic circuits that are not connected to the earth itself. The best example of this is in your vehicle. Do you know how the negative terminal of your car's battery is directly connected to the frame and chassis through the battery cable? This is called "nega-

tive ground' but it isn't an Earth ground. Your car is up on four rubber tires. Rubber is an insulating material so you are "floating" with respect to Earth ground. The schematic symbol for chassis ground is shown in figure 2.

You will also see the chassis ground symbol used in schematic diagrams for older monitor designs. These monitors are known as "hot chassis" monitors. If connected directly to the 120 VAC without an isolation transformer, the metal chassis of the monitor will have 120 volts on it, referenced to Earth ground. Connecting the chassis to an Earth ground would be disastrous. By adding the isolation transformer, we effectively put the monitor up on rubber tires and it is floating with respect to Earth ground. It is then safe to connect the chassis to an Earth ground without blowing up the monitor.

Where to Connect to Ground

Most voltage measurements are made with a digital multimeter. The black meter lead is the "common" lead. This is your ground connection. But just where, exactly, do you connect the probe on the black meter lead? The first and most obvious choice for most technicians is to use the metal frame of a monitor, power supply or other sub-assembly and touch the tip of the black probe to it. Most of the time, you can get away with this because most of the time, the metal framework is connected directly to ground. There are some pitfalls, however. Once you are aware of them, you're fine but if you don't take them into consideration, you may be tripped up, sometimes leading to some most unpleasant results.

First, if you're going to use the metal frame as your ground connection, make sure that it is not painted or anodized. You have to connect to the bare metal. That may sound elementary. I suppose that it is but time and time again, I watch my students attempt to make voltage measurements by touching the surface of an anodized heat sink with the tip of the probe or by touching the probe to a varnished or painted metal surface.

Another item to consider is that the metal frame of a unit (of any type) may not be grounded at all or may be at Earth ground potential while the actual circuitry has its own isolated chassis ground. This can get confusing in a real hurry because you would be using the Earth ground as your reference point while taking voltage readings in a circuit that uses a completely different ground that isn't directly connected to the Earth ground. You'll likely encounter all types of leakage currents that will make any measurements you make impossible to interpret.

You can tell if the frame is a good ground by running a simple power-off continuity test between the frame and a half-dozen other things in the circuit that you're pretty certain are grounded. The negative sides of electrolytic capacitors are often (by no means always) grounded. In a monitor, there is the CRT ground. If there are a number of heatsinks on a unit and they're all connected together, they are grounded as well but unless you have tested for continuity to ground, NEVER assume a heatsink to be grounded. Many are isolated from ground and may be at the same potential (voltage) as the collector of the transistor that is mounted on them. That can really mess you up if you assume it to be ground.

A monitor with an SMPS requires its own special caution. The primary side of the SMPS has its own ground that is "hot" with respect to Earth ground (see figure 3). If you are using an oscilloscope to look at waveforms on the primary side of the SMPS, you MUST power the monitor through an isolation transformer.

On the other hand, if you are 'scoping anything else in the monitor, you can connect the oscilloscope's ground connection to the chassis without using a separate isolation transformer. The power transformer in the SMPS provides the isolation required for safety.

Logic Ground

Likewise, you may find, on occasion, something called

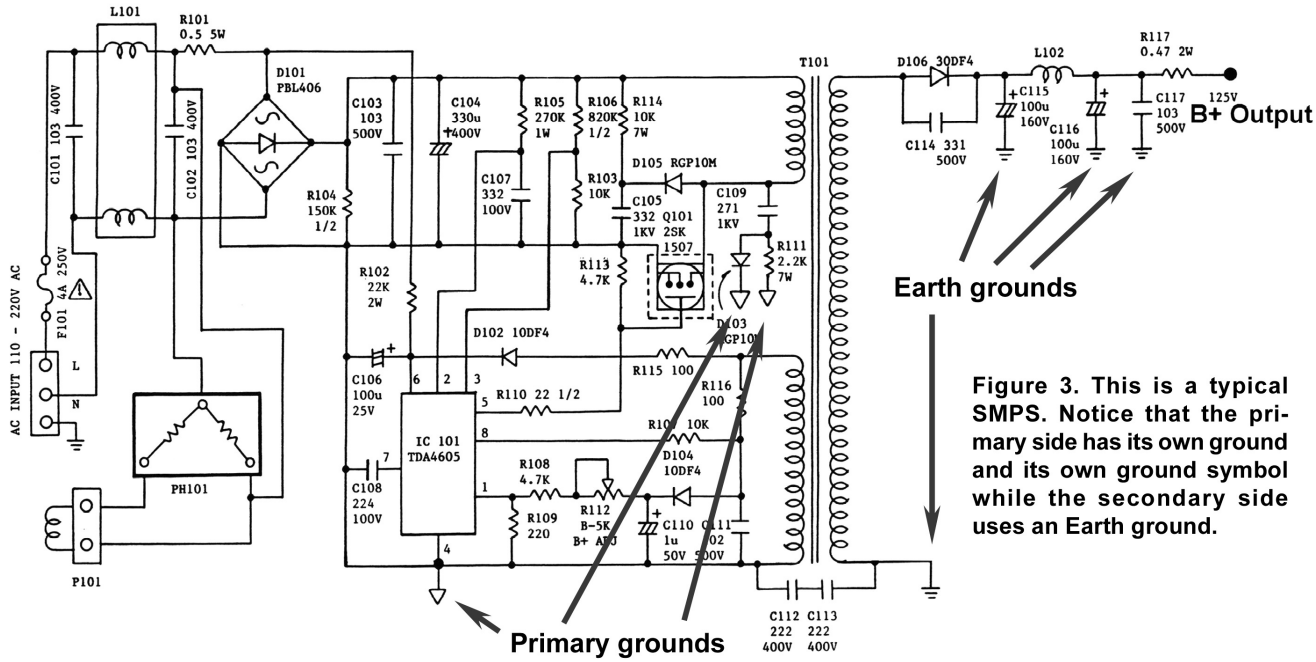

Figure 3. This is a typical SMPS. Notice that the primary side has its own ground and its own ground symbol while the secondary side uses an Earth ground.

"logic ground." The logic ground is a self-contained grounding system for the noisy digital logic, in order to keep the EMI away from sensitive analog amplifiers elsewhere in the system -OR- the logic ground is a self-contained grounding system for the digital logic, in order to keep it away from some sort of high voltage or high power AC controlling circuitry.

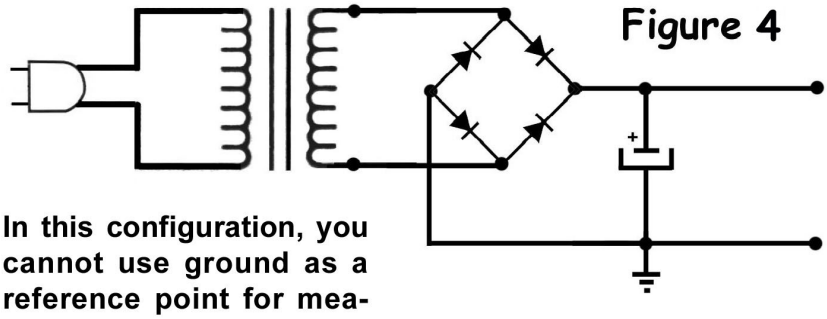

In this configuration, you cannot use ground as a reference point for measuring the AC output voltage of the transformer because there is no direct connection between the transformer's secondary winding and ground.

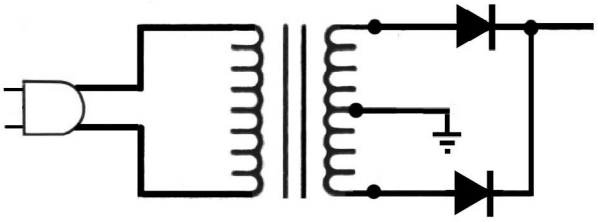

Figure 5. In this power supply, you can use ground as a reference point to measure the AC output because the center-tapped secondary winding is grounded.

Do Not Use Ground

And speaking of alternating current, it is important to realize that there are times when you will not use ground as a reference point when measuring voltage. Most notably, when you are measuring the output voltage of a transformer, if there is no direction connection between a secondary winding and ground, you can't use ground when you're taking the reading.

Figure 4 shows a conventional transformer secondary where you cannot use ground when testing the transformer's output voltage.

Figure 5 shows a center-tapped transformer in a power supply. Since the transformer's center-tap is grounded, you can use ground as your reference point.

- Slot Tech Magazine

Subscriptions & Back Issues

Why back issues of Slot Tech Magazine are important to own . . .

Slot Tech Magazine is strictly technical. As such, the magazine's contents are not time critical. The repair information and technical data contained in past issues is just as valid today as it was the day it was published.

Additionally, current and future articles more-or-less assume that readers are already familiar with what has been covered in past issues. This editorial policy assures that Slot Tech Magazine's contributing writers are not limited to "writing down" to the level of a novice technician but are free to continue to produce the most comprehensive technical articles in the gaming industry.

Randy Fromm's Slot Tech Magazine is published monthly by:

Slot Tech Magazine
1944 Falmouth Dr.
El Cajon, CA 92020-2827
tel.619.593.6131
fax.619.593.6132
e-mail editor@slot-techs.com

Subscription rates:

Domestic (USA)
- 1 year - $60.00
- 2 years - $120.00

International
- 1 year - $120.00
- 2 years - $240.00

Back Issues

All single issues of Slot Tech Magazine are $10.00/ea. For further details on the contents of each issue, please refer to the website at slot-techs.com

2001
☐ 1 ☐ 2 ☐ 3 ☐ 4 ☐ 5 ☐ 6
☐ 7 ☐ 8 ☐ 9 ☐ 10 ☐ 11 ☐ 12

2002
☐ 1 ☐ 2 ☐ 3 ☐ 4 ☐ 5 ☐ 6
☐ 7 ☐ 8 ☐ 9 ☐ 10 ☐ 11 ☐ 12

2003
☐ 1 ☐ 2 ☐ 3 ☐ 4 ☐ 5 ☐ 6
☐ 7 ☐ 8 ☐ 9 ☐ 10 ☐ 11 ☐ 12

2004
☐ 1 ☐ 2 ☐ 3 ☐ 4 ☐ 5 ☐ 6
☐ 7 ☐ 8 ☐ 9 ☐ 10 ☐ 11 ☐ 12

Company Name _____

Contact _____

Address _____

Address _____

City _____ **State/Prov.** _____

Country _____ **Zip/Postal Code** _____

Telephone _____ **Fax** _____

E-mail _____

Type of card: [ ] American Express
[ ] Discover
[ ] MasterCard
[ ] Visa

Account Number: _____

Expiration Date: _____

[ ] 1 year subscription, domestic
[ ] 1 year subscription, international
[ ] 2 year subscription, domestic
[ ] 2 year subscription, international