ASSEMBLY AND OPERATION OF THE HEATHKIT MODEL AR-2 COMMUNICATIONS RECEIVER

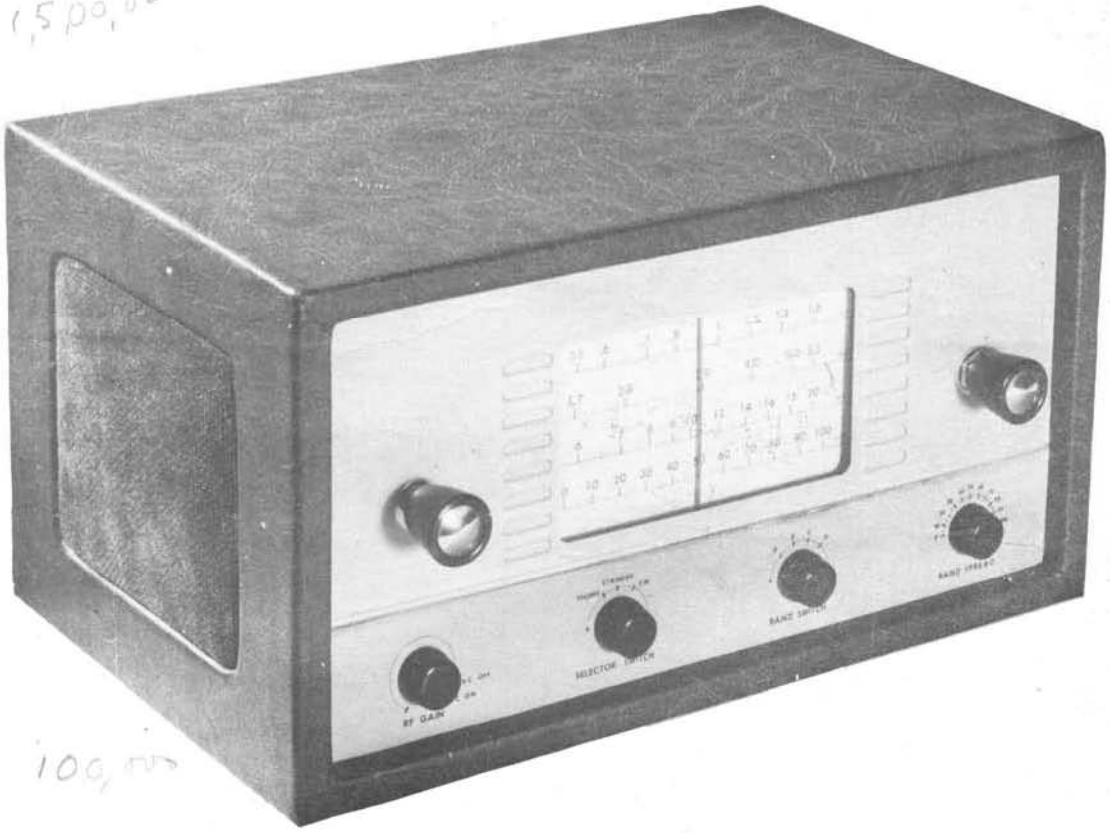

SPECIFICATIONS

Frequency Range	550 kc to 35 mc on four bands
Tube Complement	1 - 12BE6 Oscillator and Mixer
	1 - 12BA6 IF Amplifier
	1 - 12AV6 Second Detector and First Audio Amplifier
	1 - 12A6 Beam Power Output
	1 - 12BA6 BFO Tube
	1 - 5Y3 Full Wave Rectifier
Power Requirements	105-125 volts AC 50/60 cycles 45 watts
Dimensions	11 1/2" wide x 5 3/4" high x 6 3/4" deep
Shipping Weight	12 lbs.

FEATURES

- Band Spread Tuning
- Phone - Standby - CW
- Headphone Jack
- Noise Limiter
- RF Gain Control
- Ham Band Identifications

INTRODUCTION

The Heathkit model AR-2 Communications Receiver is designed to provide all of the features normally expected in a receiver of this type. Simplicity and ease of construction has been accomplished through the use of highly efficient, straightforward circuitry and a very practical chassis layout. All components have been selected carefully for quality and durability.

Four frequency bands, in conjunction with direct planetary drive, provide continuous tuning from 550 kc to 35 mc. No communication type receiver would be complete without band spread, and model AR-2 has been equipped with a type that operates at optimum efficiency on all frequency ranges. The logging scale will be particularly helpful in amateur work at the higher frequencies.

For CW reception, a complete BFO circuit may be switched into operation by means of the selector switch. When operating on CW, it is desirable to de-activate the normal AVC circuit and control the sensitivity manually. Both functions are accomplished by the RF gain control. The stand-by position of the selector switch allows operating temperatures to be maintained so that the operator may select instantly the type of reception desired at any one particular time.

The noise limiter switch at the rear of the chassis is used to minimize the interference caused by sharp transient pulses. This type of interference is occasionally encountered in highly sensitive receivers such as the model AR-2. The kit is complete with a transformer operated power supply, shielded coil assembly, and a 5 1/2" PM dynamic loudspeaker. Modernistic styling and the easily read dial assembly will contribute greatly to the receiver's attractiveness and efficiency.

CIRCUIT DESCRIPTION

An external antenna is connected to the antenna terminal at the rear of the chassis. The ground terminal, which is nearest the right rear corner of the chassis, should be securely fastened to a good solid ground point. A cold water pipe is excellent for this purpose.

The signal is applied through the antenna coil of the selected frequency band to the control grid of a 12BE6 tube, used as a combination oscillator and mixer. A 100 Ω suppressor resistor is used in series with the grid to insure maximum stability. The antenna and oscillator sections of this tube are tuned simultaneously by means of the dual tuning condenser and added band spread capacity. The oscillator signal is coupled to the oscillator grid of the same tube and thus, the heterodyne action takes place. A 455 kc signal is the result of this mixing and it is amplitude modulated by the audio portion of the RF signal. This intermediate frequency is amplified by the IF amplifier, 12BA6. Coupling before and after the IF stage is accomplished with the high gain miniature type IF transformers. Most of the sensitivity and selectivity of the receiver is developed in this section. One position of the switch in the cathode circuit of this tube allows normal operation with 150 Ω as the cathode resistance. The other position shorts AVC to ground and makes the cathode resistance variable. This constitutes the RF gain control.

After IF amplification, the signal is coupled to one of the diode plates of the second detector, 12AV6. The positive signal peaks cause the diode to conduct, charge the diode filter condenser, and develop a filtered voltage across the volume control. AVC voltage is present at the negative side of the control and is coupled through a filter network to both the mixer and IF stages. Coupling is made from the volume control through a .05 μfd condenser to the control grid of the triode section of the 12AV6 tube. This section acts as the first audio amplifier.

From the plate of the 12AV6, the audio signal is applied through a .02 μfd condenser to the control grid of a beam power pentode, 12A6. After power amplification, the signal is matched to the speaker voice coil through the output transformer. The tone quality is further improved by using a .005 μfd condenser across the primary winding of the transformer. A 10 Ω resistor provides proper matching when headphones are used and it causes only a very slight mis-match when the speaker is used. However, if no attempt to use headphones will ever be made, the 10 Ω resistor may be eliminated in order to gain approximately 2 db with the speaker. Headphones should never be used without the resistor because the secondary winding of the output trans-

former will be practically unloaded and it could result in a great deal of damage. The closed circuit jack opens up the speaker voice coil circuit when headphones are plugged in, and therefore, there is no need for a separate speaker switch.

Referring back to the 12AV6 tube, there is a connection between the other diode plate and the control grid of the 12A6, through a SPST slide switch. This is the noise limiter circuit. With the switch closed, the diode plate is charged to the average amplitude of the audio signal present at the grid of the output tube. If a sharp noise pulse occurs, the positive peaks will be eliminated by the rectification action of the diode. Atmospheric and other similar types of interference will, therefore, be greatly subdued.

When the signal input to the receiver is merely CW, no detection can take place in the second detector because there are no amplitude variations. Therefore, the signal at the first diode plate of the detector is 455 kc interrupted only by the keying of the distant transmitter. Another signal becomes necessary under these conditions in order that the difference between it and 455 kc may be audible. This signal is provided by the BFO circuit consisting of a BFO coil and a 12BA6 tube wired as a triode, along with appropriate resistors and condensers. The circuit is activated by the selector switch, which closes the cathode circuit of the BFO tube. Coupling is accomplished through the stray capacity of the circuit to the first diode plate of the 12AV6 tube.

In the standby position of the selector switch, the BFO circuit is open in addition to the ground return circuit of the complete receiver. In the phone position, the ground circuit is completed while the BFO remains open. Tube filaments are activated at all times to provide instantaneous operation of any circuit when the switch is manipulated.

NOTES ON ASSEMBLY AND WIRING

The Heathkit model AR-2 Communications Receiver, when constructed in accordance with the instructions in this manual, is a high-quality unit capable of many years of trouble-free service. We therefore urge you to take the necessary time to assemble and wire the kit carefully. Do not hurry the work, and you will be rewarded with a greater sense of confidence, both in your receiver and your own ability.

This manual is supplied to assist you in every way to complete the kit with the least possible chance for error. We suggest that you take a few minutes now and read the entire manual through before any work is started. This will enable you to proceed with the work much faster when construction is started. The large fold-in pictorials are handy to attach to the wall above your work space. Their use will greatly simplify the completion of the kit. These diagrams are repeated in smaller form within the manual. We suggest that you retain the manual in your files for future reference, both in the use of the receiver and for its maintenance.

UNPACK THE KIT CAREFULLY AND CHECK EACH PART AGAINST THE PARTS LIST. In so doing, you will become acquainted with each part. Refer to the charts and other information shown on the inside covers of the manual to help you identify any parts about which there may be a question. If some shortage is found in checking the parts, please notify us promptly and return the inspection slip with your letter to us. Hardware items are counted by weight, and if a few are missing, please obtain them locally if at all possible.

Read the note on soldering on the inside of the back cover. Crimp all leads tightly to the terminal before soldering. Be sure both the lead and the terminal are clean of wax, corrosion, or other foreign substances. Use only the best rosin core solder, preferably a type containing the new activated fluxes such as Kester "Resin-Five," Ersin "Multicore," or similar types.

NOTE: ALL GUARANTEES ARE VOIDED AND WE WILL NOT REPAIR OR SERVICE INSTRUMENTS IN WHICH ACID CORE SOLDER OR PASTE FLUXES HAVE BEEN USED. WHEN IN DOUBT ABOUT SOLDER, IT IS RECOMMENDED THAT A NEW ROLL PLAINLY MARKED "ROSIN CORE RADIO SOLDER" BE PURCHASED.

Resistors and controls generally have a tolerance rating of ±20% unless otherwise stated in the parts list. Therefore, a 100 KΩ resistor may test anywhere from 80 KΩ to 120 KΩ. (The letter K is commonly used to designate a multiplier of 1000.) Tolerances on condensers are generally even greater. Limits of +100% and -50% are common for electrolytic condensers. The parts furnished with your Heathkit have been specified so as to not adversely affect the operation of the finished instrument.

In order to expedite delivery to you, we are occasionally forced to make minor substitutions of parts. Such substitutions are carefully checked before they are approved, and the parts supplied will work satisfactorily. By checking the parts list for resistors, for example, you may find that a 2.2 megohm resistor has been supplied in place of a 2 megohm as shown in the parts list. These changes are self-evident and are mentioned here only to prevent confusion to you in checking the contents of your kit.

We strongly urge that you follow the wiring and parts layout shown in this manual. The position of wires and parts is quite critical in this instrument, and changes may seriously affect the characteristics of the circuit.

STEP-BY-STEP ASSEMBLY INSTRUCTIONS

The following instructions are presented in a simple, logical, step-by-step sequence to enable you to complete your kit with the least possible confusion. Be sure to read each step all the way through before you start to do it. When the step is completed, check it off in the space provided.

We suggest that you consider the following before any work is started:

1. As each phase of construction is begun, select the proper large fold-in pictorial and attach it to the wall above your work bench.
2. Lay out all parts so that they are readily available. Refer to the general information inside the front and back covers of this manual to help you identify components. The coils and mica condensers used in the coil turret are particularly important.
3. Special care should be exercised when handling the coils in order that the windings will not be disturbed.
4. The speaker cone can easily be damaged and it should be protected during all phases of construction.
5. The band spread and tuning condenser shafts should be rotated fully counterclockwise to completely mesh the plates. In this way the plates can be protected from damage during installation.

In assembling the kit, use lockwashers under all nuts except at 7 pin miniature sockets and where solder lugs are used. Tube sockets, and the condenser mounting wafer are installed from the inside of the chassis. All screws are mounted with the heads on top of the chassis, except for those used with the tuning condenser. Other details of construction are included where pertinent in the instructions.

(✓) Place the chassis upside down on the bench, with the triangular shaped cut-out on your right. It will then be properly oriented with the front facing you as in Figure 1. It will be helpful to mark each locating hole with its identification letter with a grease pencil.

(✓) Install the metal condenser mounting wafer in position G, using 6-32 x 3/8 screws and nuts and #6 lockwashers. One flat edge in the cut-out in the wafer should run parallel to the rear of the chassis as in Figure 1.

(✓) Mount the power transformer shown in Figure 5 with 8-32 screws and nuts and #8 lockwashers. The bottom plate of the transformer should be flush with the right and rear edges of the chassis. It is positioned so that the 2 green leads and the 2 black leads can be inserted through the large hole nearest the right edge of the chassis.

(✓) Readjust the dial drum pulley so that the opening in the outer rim is straight up when the tuning condenser is fully meshed. The spacing between the drum and the rear of the dial plate should be approximately 1/8". Tighten the set screw permanently.

(✓) String the dial cord as shown. It has been pre-cut to the proper length and no further adjustment is necessary.

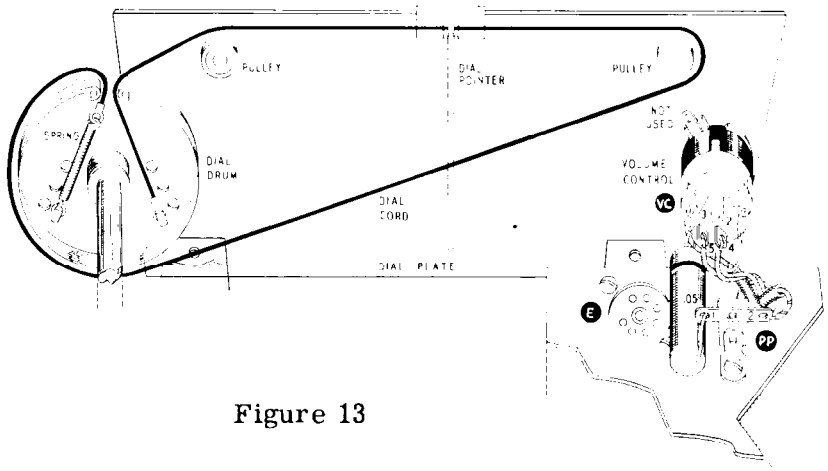

Figure 13

(✓) With the tuning condenser fully meshed, make a distinguishable mark on the dial cord directly above the extreme left edge of the scale. Rotate the tuning condenser fully clockwise and note the position of the mark with respect to the right edge of the scale. Change the position of the mark until the width of the scale is exactly centered in the width of the movement of the mark from one extreme position to the other. Install the dial pointer as shown, with its center fastener resting on the mark made on the dial cord. Be careful when crimping the fasteners because they will cut the dial cord if they are too tight. Exert just enough pressure so that the pointer is perpendicular to the edge of the dial plate and moves with the dial cord.

(✓) Install the two larger knobs on the shafts of the tuning condenser and the volume control. The three small pointer knobs are for the RF gain control, stand-by switch and the band switch. The remaining knob is to be installed on the shaft of the band spread condenser.

NOTE: The large bushing with the plastic washer is to be used after the receiver has been installed in a cabinet or panel of your choice and the control plate mounted over the control shafts. The bushing end is slipped over the band spread condenser shaft, through the control plate, and tightened down by means of the set screw. The hair line should coincide with the zero mark on the plate with the band spread condenser fully meshed. For alignment purposes however, the control plate is not required.

You are now ready to test and align the receiver. If a standard VTVM, a 20 KΩ per volt multimeter, or any sensitive DC measuring device is available, it is recommended that you proceed with the alignment of the set without the loudspeaker. If however, such instruments are not obtainable, you may permanently mount the speaker according to instructions on Page 23, and align the set by ear. In any case, a signal generator is required and the electronic method is preferable.

PRELIMINARY TEST

1. Adjust the tuning core in band "A" oscillator coil until the screw protrudes from the clip about 3/8".

2. Adjust each of the 6 trimmers about half way. The IF transformers are factory adjusted to their approximately correct positions.

3. Place all tubes in their respective sockets except the 5Y3 rectifier tube.

4. If possible measure the resistance from terminal 8 on socket F to ground. The value should be at least 40 KΩ. If it is less, it will be necessary to check the circuit for a wiring error.

5. Plug the 5Y3 tube into socket F.

6. Place all knobs in the positions described just above the voltage chart on Page 24. The one exception is that the volume control should be completely counterclockwise with the switch off.

Unpack the speaker and make a temporary connection between either of the speaker terminals and any point on the receiver chassis. Connect the other terminal to lug 2 on the terminal strip M.

Connect the line cord to a 110 to 125 volt 50/60 cycle AC outlet. DO NOT CONNECT THIS RECEIVER TO A DC (DIRECT CURRENT) LINE. Serious damage to the power transformer will result. No attempt should be made to use this receiver on 25 cycle AC lines, since the transformer may be seriously damaged, and the set will not operate.

Turn the set on by rotating the volume control clockwise until a click is heard. The filaments should light up after a very few seconds. Watch the 5Y3 tube closely and if the plates turn red, or if the tube glows a bright violet color, turn the receiver off immediately. Then check the circuit again, and the 5Y3 tube. Such a condition indicates excessive current through the tube, which in turn is caused by a short, or partial short, from the B+ circuit to ground. The most logical method of investigation is to trace the wiring and the components between F8 and ground.

If all conditions are normal, rotate the volume control fully clockwise and you should hear a slight hum. Possibly a rushing noise will also be heard due to the presence of fluorescent lights and other electrical appliances. Reverse the line plug in the AC outlet to determine which position produces the minimum hum and noise level. Rotate the tuning condenser and you should pick up a few broadcast stations even without an antenna. To increase the signal level, touch the antenna terminal with your free hand. Touch only the screw head and not any other part of the receiver chassis.

Turn the receiver off and pull the line cord out of the AC outlet. Then disconnect the speaker leads from the chassis and M2.

RECEIVER ALIGNMENT

The following procedure is commonly used in the service industry even though many other methods may be used. It is assumed that a DC meter of some type is available in addition to an RF signal generator capable of producing an unmodulated signal at frequencies from 455 kc through 36 mc. The Heathkit model SG-7, used with model V-6 VTVM or a 20,000 ohms per volt multimeter would be ideal. If the proper meter cannot be obtained you may install the speaker and align the set by ear. In that case, a modulated RF signal is necessary and this also is produced by model SG-7. Whenever an adjustment point of maximum meter indication is mentioned in the procedure, you may adjust to maximum volume if a speaker is used. Use an insulated alignment tool in order to eliminate the capacitive effect of the hand, which will cause a false point of adjustment in all cases. For convenience, we will refer to the meter as a VTVM used as a DC voltmeter.

Return all controls and switches to the positions indicated above the voltage chart. Make a temporary connection between terminal S1 on the tuning condenser and the chassis. Connect the common VTVM lead to the chassis and the DC test lead to terminal VC3 on the volume control. Connect the hot lead of a signal generator, through a .01 μfd condenser, to terminal 7 on socket A, and the ground lead to the receiver chassis. Set the VTVM selector switch to DC-, since the voltage will be negative, and the range switch to one of the high positions. Plug the receiver in and turn the volume control fully clockwise. Set the signal generator to 455 kc, unmodulated and reduce the output until a readable voltage is obtained on the lowest VTVM range.

Adjust the bottom screw on the output IF transformer for maximum meter indication. Then adjust the top screw to maximum. Reduce the signal output of the generator as the VTVM readings become higher. Now adjust the top screw on the input IF transformer to maximum. Finally the bottom screw is adjusted. Repeat the procedure at least twice since there may be a tendency for the transformers to interact. This completes the alignment of the IF transformers.

Remove the temporary connection between S1 and the chassis. Rotate the band spread condenser about half way. The plates should then be about 50% meshed. Do not touch the band spread condenser after this adjustment. Turn the band switch to "D" which is fully clockwise. Also turn the tuning condenser fully clockwise. Connect the ground lead of the signal generator to the chassis or to the grounded screw head on the antenna terminal strip. The hot lead is then connected to the antenna screw through a resistor of about 470 ohms which will act as a dummy antenna.

Set the generator to 36 megacycles (36 mc) and adjust the band "D" oscillator trimmer for maximum meter deflection. The oscillator trimmer for this band is located at the base of the second section of the tuning condenser. The adjustment will be critical and the meter indication will change when the tool is removed from the screw head. Maximum reading should be present after the tool is removed. There will always be a residual reading due to the presence of a constant AVC voltage.

Check the image frequency by setting the generator to 36.910 mc, which is twice the IF frequency above 36 mc. If the image appears at 910 kc below 36 mc rather than above, then it will be necessary to unscrew the band "D" oscillator trimmer until these two maximum points are properly positioned. They should occur at 36 mc and again at 36.910 mc.

Turn the generator to 32 mc and then set the pointer on the receiver to 32 mc. Adjust the band "D" antenna trimmer until maximum meter indication occurs exactly at 32 mc on the dial plate. This trimmer is located at the base of the first section of the tuning condenser. Again check the presence of the image frequency by turning the generator dial to 32.910 mc.

Turn the band switch to position "C". With the tuning condenser completely unmeshed, adjust the signal generator to 10.5 mc. Adjust the band "C" oscillator trimmer for maximum indication. This is the trimmer located next to the band "C" oscillator coil CO. Make sure the image frequency is at 11.410 mc on the generator dial.

Set the generator to 9.5 mc and tune the receiver for maximum indication. Adjust band "C" antenna trimmer (next to the antenna coil CA) until maximum occurs at 9.5 mc on the receiver dial. Check the image frequency.

Set the band switch to position "B", and set the generator to 4 mc. Turn the tuning condenser fully clockwise and adjust band "B" oscillator trimmer to maximum. This trimmer is next to the band "B" oscillator coil BO. Check the image frequency at 4.910 mc on the generator dial.

Adjust the generator to 3.5 mc and tune the receiver to that frequency. Set the band "B" antenna trimmer (next to BA) until the maximum occurs at 3.5 mc on the receiver dial. Check the image frequency. Notice now, that the tuning becomes much broader as the frequency is lowered.

Set the band switch to position "A" and the generator to 1550 kc. Remove the 470 Ω resistor at the hot generator lead and replace it with a condenser valued at approximately 270 $\mu\mu$f. Adjust the band "A" oscillator trimmer for maximum indication. This trimmer is next to AO.

Close the tuning condenser completely by rotating the shaft counterclockwise. Set the generator at 535 kc and adjust the core in the oscillator coil AO to maximum. Repeat the last two steps since the adjustments may interact.

Set the generator to 1400 kc and adjust band "A" antenna trimmer (next to AA) until the maximum occurs at 1400 kc on the radio dial.

Set the generator to 600 kc and while carefully moving the dial pointer back and forth across 600 kc, adjust the band "A" oscillator core until the meter indicates the highest possible maximum point. Since interaction will again occur, it is recommended that the last two adjustments be repeated at least twice.

The band spread condenser has remained at a 50% rotation and therefore the dial calibration will hold perfectly true only at that point. Any other position of the band spread condenser will cause the dial readings to be slightly displaced either to the left or right.

LOUDSPEAKER INSTALLATION

Turn the receiver off and disconnect the line cord from the AC outlet before installing the speaker.

(✓) Remove the screws which hold the output transformer at positions M and SL5.

(✓) Install the speaker from the top of the chassis as shown. Replace the screws and tighten down the nuts permanently.

(✓) Connect a bare wire from SL5 (S) to the nearest speaker terminal (S).

(✓) Run a lead from the other speaker terminal (S), down next to the chassis, and up to the headphone jack terminal V2 (S).

( ) Install the four small angle brackets as shown, using 6-32 x 3/16 screws and nuts and #6 lockwashers. It might be necessary to clip the corner off the angle bracket near the band spread condenser in order to clear the condenser frame.

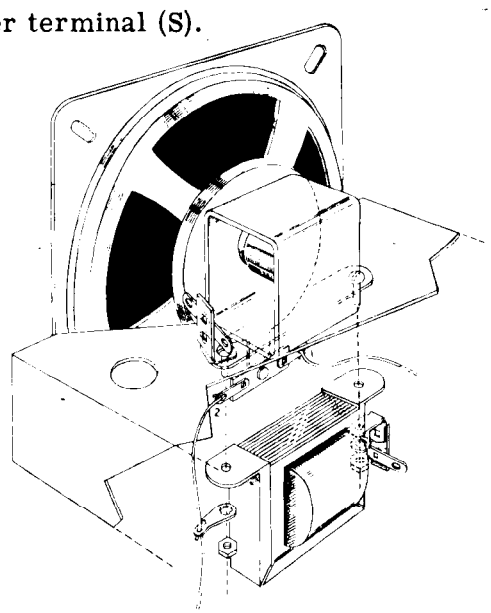

Figure 14

BFO ADJUSTMENT

Although the BFO coil is adjusted by using a 2 MC signal, any frequency on bands "B", "C", or "D" may be used. Connect the hot lead of the signal generator, through a 470 Ω resistor to the antenna terminal. Attach the generator ground lead to the receiver chassis. Set the signal generator at 2 MC, unmodulated, on band "B". Tune the receiver for maximum meter indication on the VTVM connected in exactly the same manner as that used in the alignment procedure.

Turn the selector switch to the CW position and if the BFO coil is not radically out of adjustment, a beat note should be heard. Adjust the core of the BFO coil until the tone is most pleasing to listen to. If no beat note is heard, adjust the core until the beat frequency becomes audible and then set it for the most pleasing tone.

All assembly and adjustments are now completed and the receiver is ready for installation. A completely assembled and finished cabinet is available from the Heath Company for $4.50. It is a proxylin impregnated fabric covered plywood cabinet with a screened front panel to match the AR-2 controls. If however, another type of cabinet is to be used, the control plate will be needed. Mount it over the controls on the front of the cabinet using ornamental or flat headed wood or metal screws. They can be purchased locally at very little expense.

IN CASE OF DIFFICULTY

1. Recheck the wiring. Trace each lead in colored pencil on the pictorial as it is followed in the receiver. Most cases of difficulty result from wrong connections. (Often having a friend check the wiring will reveal a mistake consistently overlooked.)

2. Compare the socket voltages with those shown in the table. The readings should be within 20% of those tabulated if a VTVM is used. Other types of meters may give lower readings. If a voltage reading fails to compare with the value shown, check further into the circuit involved by checking the various components (resistors, condensers, tubes, etc.)

VOLTAGE CHART

(1) Tuning condenser fully meshed.
(2) Band spread condenser fully meshed.
(3) Band switch in position "A".
(4) Selector switch in phone position.
(5) RF gain control clockwise with AVC on.
(6) Volume control at minimum with switch on.
(7) No connection to antenna terminal.

SOCKET	TUBE	Pin 1	Pin 2	Pin 3	Pin 4	Pin 5	Pin 6	Pin 7	Pin 8
A	12BE6	-5.5	0	0	Fil.	295	120	NS	
B	12BA6	NS	0	0	Fil.	295	120	1.9	
C	12AV6	-.6	0	0	Fil.	.76	.72	90	
D	12A6	0	0	350	290	NS	TP	Fil.	15
E	12BA6*	-2.8	0	0	Fil.	22	22	0	
F	5Y3	TP	370	TP	310AC	NC	310AC	NC	370

* Voltages at socket "E" measured with selector switch at CW.
NC - No connection to this contact.
TP - Tie point.
NS - Not significant.
Fil. - Voltage between terminals so marked and ground is approximately 12 volts AC.
All voltages are DC measured to chassis unless otherwise stated. All readings taken with a Heathkit VTVM.

3. If the socket voltages are within 20% of the values indicated and trouble still persists, remove all tubes and have them checked by a competent radio serviceman.

4. Carefully recheck the color codes on resistors, condensers, and transformer leads. If there is a question concerning the color of a transformer lead, scraping the insulation lightly with a knife may help to identify the color quickly.

5. Always reverse the line cord in the outlet for minimum hum.

Most difficulties fall in a general pattern and the following outline will be helpful in isolating the causes.

1. Completely dead receiver:
   The cause will usually be found in the power supply section. The voltage between the line

cord terminations, K1 and K2, should check 110 to 120 volts AC. If the on-off switch is operating properly, this same voltage will be present between K1 and F3 with the switch on. Incorrect voltages at socket F may be caused by a faulty 5Y3 or by wrong connections at that socket. It can also be caused by excessive current drain to another portion of the circuit. The DC voltage at F8 should also be present at lug #1 of the filter condenser and at D6, with about 15 volts less at D3. Lug #3 on the filter condenser should be about 60 volts DC lower than #1. The plate and screen voltages at sockets A, B, C, and E should then compare with the chart. If not, check the IF transformer wiring and all resistors connected either directly or indirectly to plate and screen grid terminals. If any of these voltage points read zero, then an open circuit is present between it and the B+ supply circuit.

2. Noise and hum, but no signal:
Signal loss can, of course, be caused by incorrect wiring or faulty tubes. The stage causing the trouble can be isolated by touching an insulated screwdriver to each control grid terminal in the signal circuit beginning with socket D, then C, B, and A in that order. Place the screwdriver on terminal D5 and then touch your finger to the metal portion of the screwdriver, being careful not to touch any other part of the receiver or chassis with either hand. A low pitched hum should be audible. Then proceed to C5 and the hum should become much louder. At terminals B1 and A7, the hum and noise level should both increase greatly. The absence of hum at D5 will indicate a faulty 12A6 tube in most cases. It is assumed that the wiring is correct. No hum increase at C5 indicates a bad 12AV6 tube, a faulty .02 μfd coupling condenser, incorrect wiring at that socket, or a short between C5 and ground. No increase of signal at B1 can be caused by a faulty 12BA6 tube or the output IF transformer. A short between B1 and ground can also be the cause. The input IF transformer, the 12BE6 tube, and the wiring at socket A will be suspected in the noise and hum level does not increase when touching A7.

If no great increase in the noise level is noticed when touching the antenna terminal, check continuity through the antenna and oscillator coil for that band. The two coils under the chassis should also be checked in addition to the wiring of the band switch and coil turret. Look for a short between the plates of the tuning and band spread condensers.

3. Distortion:
A careful voltage check will usually reveal the cause of distortion. High values of resistance at D8 or B7 may be the trouble and therefore these particular resistors should be checked. By isolating and correcting the cause of any serious voltage difference, distortion will usually be eliminated. If several volts are measured between D5 and D1, the output stage is probably oscillating. Redress the leads at socket D and also the output transformer leads.

4. Squealing and howling:
Check the connections to both Spirashields and the conductors inside the shields. Also check the lead dress and wiring along terminal strip L and to the volume control. Using the receiver in close proximity to an operating TV receiver will also cause this type of disturbance. Check by turning the TV set off for a short time.

5. Hum:
An open section of the filter condenser G will cause a high hum level at 120 cycles. A 60 cycle hum can be caused by leakage between elements in one of the tubes. In this case the best testing method is to replace the tube temporarily for comparison purposes. Hum can also be caused by operating the receiver in a strong electrostatic field. Additional shielding will be helpful in that respect.

The correct placement of parts, correct wiring, and proper identification of components cannot be over-emphasized since an error can cause all types of trouble. Model AR-2 is practically trouble-free and if a mistake is made, the result will no doubt fall into one of the categories listed above.

REPLACEMENTS

Material supplied with Heathkits has been carefully selected to meet design requirements and ordinarily will fulfill its function without difficulty. Occasionally improper instrument operation can be traced to a faulty tube or component. Should inspection reveal the necessity for replacement, write to the Heath Company and supply all of the following information:

A. Thoroughly identify the part in question by using the part number and description found in the manual parts list.
B. Identify the type and model number of kit in which it is used.
C. Mention the order number and date of purchase.
D. Describe the nature of defect or reason for requesting replacement.

The Heath Company will promptly supply the necessary replacement. Please do not return the original component until specifically requested to do so. Do not dismantle the component in question as this will void the guarantee. If tubes are to be returned, pack them carefully to prevent breakage in shipment as broken tubes are not eligible for replacement. This replacement policy does not cover the free replacement of parts that may have been broken or damaged through carelessness on the part of the kit builder.

SERVICE

In event continued operational difficulties of the completed instrument are experienced, the facilities of the Heath Company Service Department are at your disposal. Your instrument may be returned for inspection and repair for a service charge of $5.00 plus the cost of any additional material that may be required. THIS SERVICE POLICY APPLIES ONLY TO COMPLETED INSTRUMENTS CONSTRUCTED IN ACCORDANCE WITH THE INSTRUCTIONS AS STATED IN THE MANUAL. Instruments that are not entirely completed or instruments that are modified in design will not be accepted for repair. Instruments showing evidence of acid core solder or paste fluxes will be returned not repaired.

The Heath Company is willing to offer its full cooperation to assist you in obtaining the proper operation of your instrument and therefore this factory repair service is available for a period of one year from the date of purchase.

SHIPPING INSTRUCTIONS

Before returning a unit for service, be sure that all parts are securely mounted. Attach a tag to the instrument giving name, address and trouble experienced. Pack in a rugged container, preferably wood, using at least three inches of shredded newspaper or excelsior on all sides. DO NOT SHIP IN THE ORIGINAL KIT CARTON AS THIS CARTON IS NOT CONSIDERED ADEQUATE FOR SAFE SHIPMENT OF THE COMPLETED INSTRUMENT. Ship by prepaid express if possible. Return shipment will be made by express collect. Note that a carrier cannot be held liable for damage in transit if packing, in HIS OPINION, is insufficient.

SPECIFICATIONS

All prices are subject to change without notice. The Heath Company reserves the right to discontinue instruments and to change specifications at any time without incurring any obligation to incorporate new features in instruments previously sold.

WARRANTY

The Heath Company limits its warranty of parts supplied with any kit (except tubes, meters and rectifiers, where the original manufacturer's guarantee only applies) to a period of three (3) months from the date of purchase. Replacement will be made only when said part is returned postpaid, with prior permission and in the judgment of the Heath Company was defective at the time of sale. This warranty does not extend to any Heathkits which have been subjected to misuse, neglect, accident and improper installation or applications. Material supplied with a kit shall not be considered as defective, even though not in exact accordance with specifications, if it substantially fulfills performance requirements. This warranty is not transferable and applies only to the original purchaser. This warranty is in lieu of all other warranties and the Heath Company neither assumes nor authorizes any other person to assume for them any other liability in connection with the sale of Heathkits.

The assembler is urged to follow the instructions exactly as provided. The Heath Company assumes no responsibility for the operation of the completed instrument, nor liability for any damages or injuries sustained in the assembly or operation of the device.

HEATH COMPANY
Benton Harbor, Michigan

WIRING OF EXPORT TYPE

110/220 VOLT POWER

TRANSFORMERS

These transformers have a dual primary for use on either 110 Volts or 220 Volts. Wire as shown.

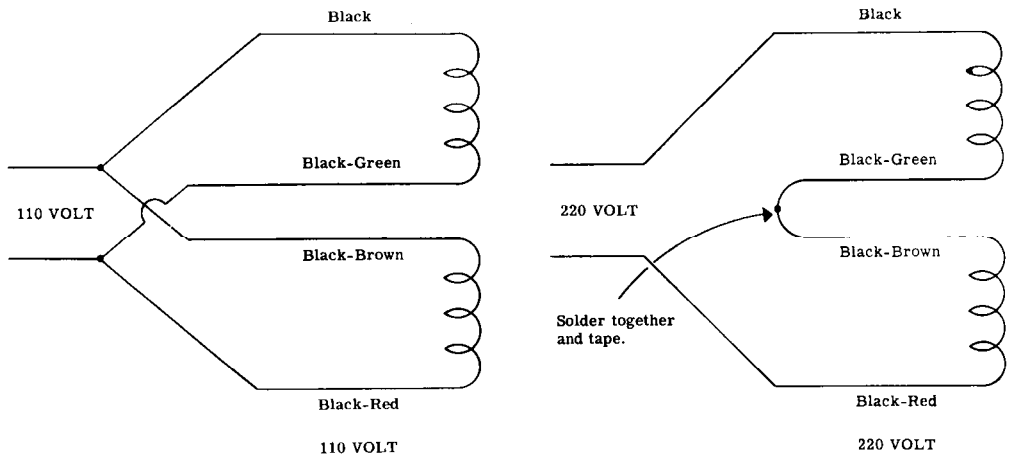

PARTS LIST

HEATHKIT COMMUNICATIONS RECEIVER

MODEL AR-2

When ordering replacement parts, be sure to specify the part number listed below.

PART No.	PARTS Per Kit	DESCRIPTION
Resistors		
1-3	1	100 Ω 1/2 watt
1-66	1	150 Ω 1/2 watt
1-21	1	15 KΩ 1/2 watt
1-22	1	22 KΩ 1/2 watt
1-25	2	47 KΩ 1/2 watt
1-29	2	220 KΩ 1/2 watt
1-33	1	470 KΩ 1/2 watt
1-38	1	3.3 megohm 1/2 watt
1-71	1	4.7 megohm 1/2 watt
1-11A	1	10 Ω 1 watt
1-1A	1	470 Ω 1 watt
1-1B	1	2700 Ω 2 watt
1-4B	1	15 KΩ 2 watt

PART No.	PARTS Per Kit	DESCRIPTION
Condensers		
21-7	1	33 μμf
21-11	2	150 μμf
20-34	1	350 μμf mica
20-35	1	910 μμf mica
21-14	1	.001 μfd
20-36	1	5000 μμf mica
21-15	2	.005 μfd non-insulated
23-2	1	.005 μfd
23-8	1	.02 μfd
23-10	5	.05 μfd
25-6	1	20-20-20 μfd
31-8	6	1-10 μμf trimmer
26-16	1	2 gang band spread
26-15	1	2 gang tuning

PART No.	PARTS Per Kit	DESCRIPTION
Controls		
19-16	1	10 KΩ SPDT switch
19-4	1	1 megohm with SPST switch
Transformers		
54-3	1	Power transformer
51-3	1	Output transformer
52-4	1	Input IF transformer
52-5	1	Output IF transformer
Coils		
40-37	1	Band "A" antenna coil
40-38	1	Band "A" oscillator coil
40-39	1	Band "B" antenna coil
40-40	1	Band "B" oscillator coil
40-41	1	Band "C" antenna coil
40-42	1	Band "C" oscillator coil
40-43	1	Antenna coil
40-44	1	Oscillator coil
40-45	1	BFO coil
Switches		
60-1	1	SPST slide switch
63-54	1	3 position rotary switch
63-55	1	4 position band switch
Tubes		
411-3	1	5Y3 tube
411-21	1	12A6 tube
411-50	1	12BE6 tube
411-51	2	12BA6 tube
411-52	1	12AV6 tube
Sockets-Terminal Strips-Jacks		
434-2	2	Octal socket
434-37	4	7 pin miniature socket
436-4	1	Headphone jack
431-1	2	1 lug terminal strip
431-2	2	2 lug terminal strip
431-10	1	3 lug terminal strip
431-11	1	5 lug terminal strip
431-6	1	Antenna terminal strip
Sheet Metal Parts		
100-M24	1	Dial plate
100-M50	1	Chassis
204-M46	2	Dial plate mounting bracket
204-M48	1	Coil mounting bracket
205-M23F60	1	Control plate
206-M7	1	Coil shield

PART No.	PARTS Per Kit	DESCRIPTION
Hardware		
250-2	8	3-48 x 1/4 screw
250-7	9	6-32 x 3/16 screw
250-9	27	6-32 x 3/8 screw
250-15	2	#8 set screw
250-18	4	8-32 x 3/8 screw
252-1	8	3-48 hex nut
252-3	30	6-32 hex nut
252-4	4	8-32 hex nut
252-7	5	3/8 x 32 control nut
253-10	2	3/8 nickel plated washer
254-1	31	#6 lockwasher
254-2	4	#8 lockwasher
254-4	5	3/8 lockwasher
259-1	5	#6 solder lug
Wire-Shielding		
340-2	1	length Bare wire
344-1	1	length Hookup wire
346-1	1	length Sleeving
206-6	1	length Spirashield
Miscellaneous		
73-1	1	3/8 rubber grommet
89-1	1	Line cord
100-M31	1	Plastic pointer
100-M25	1	Dial pulley
100-M27	1	Dial cord
204-9	4	Angle bracket
207-5	1	Cable clamp
258-4	1	Tension spring
260-7	2	IF transformer clip
401-9	1	Loudspeaker
462-13	1	Knob
462-14	2	Knob
462-17	3	Pointer knob
463-1	1	Dial pointer
481-2	1	Metal mounting wafer
390-8	1	Adhesive label set
260-9	6	Palnut clip
475-1	1	Powdered iron core
595-65	1	Manual

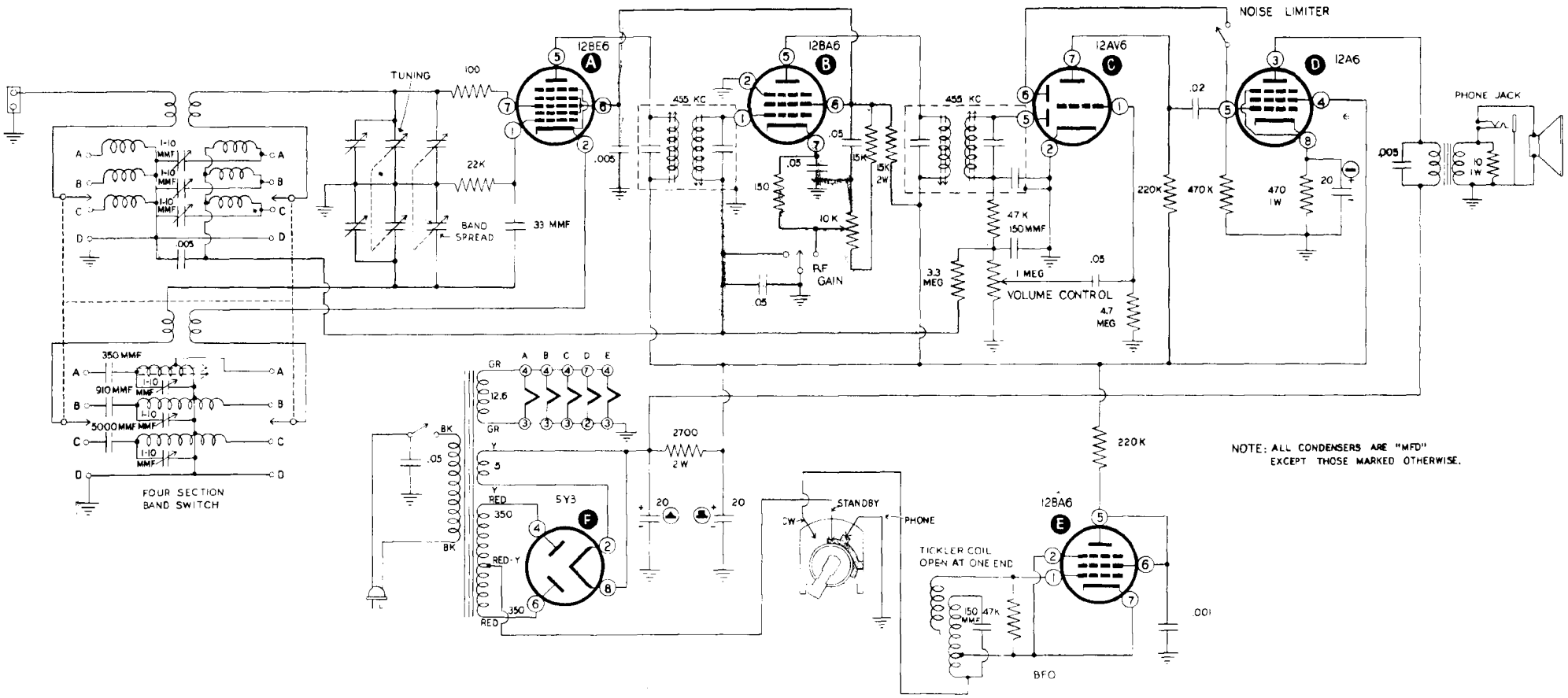

MODEL AR 2 COMMUNICATION RECEIVER