PRICE $1.00

HEATHKIT®
ASSEMBLY MANUAL

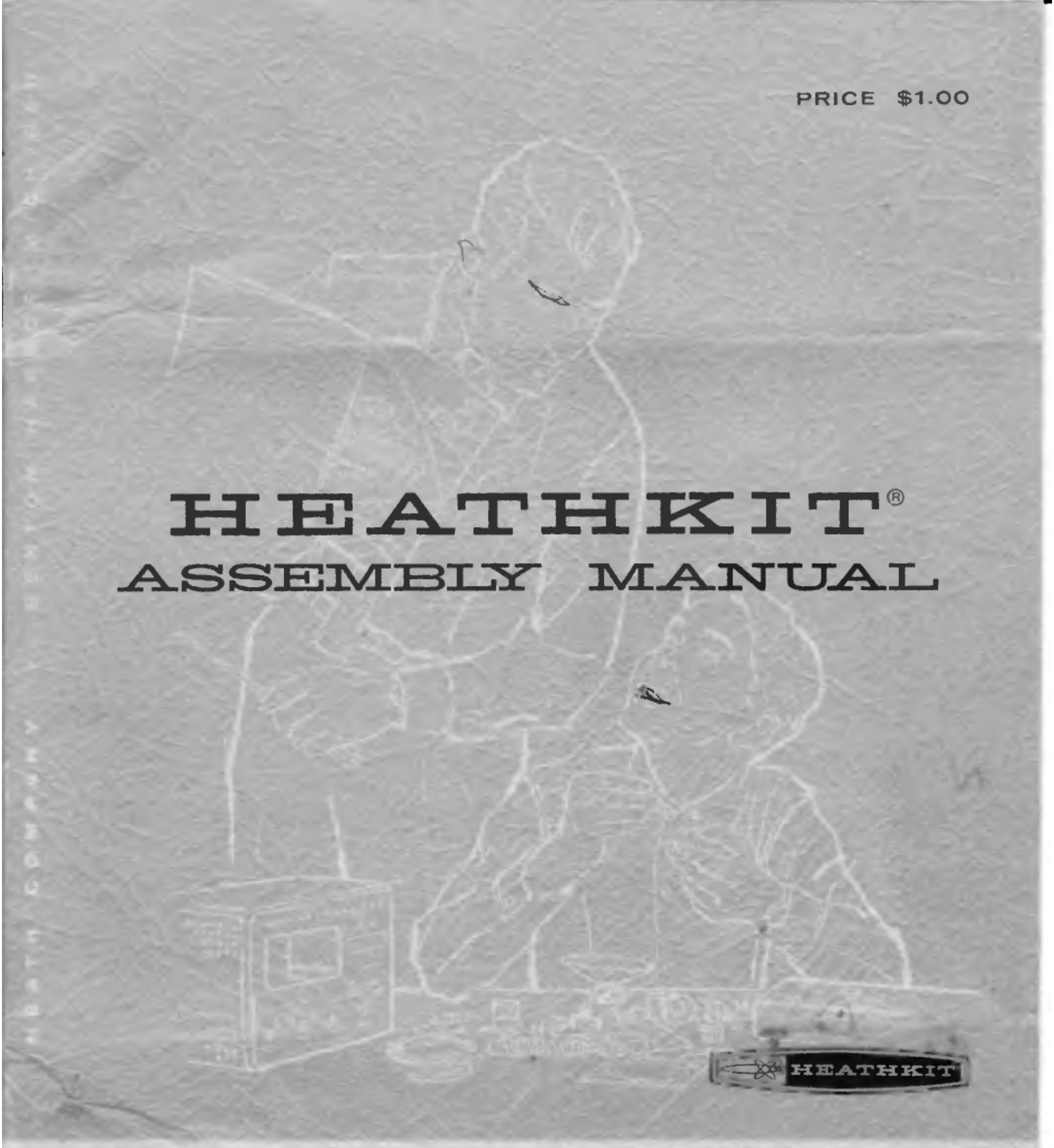

HEATHKIT

CAPACI-TESTER

MODEL IT-22

SPECIFICATIONS

Range -

Open Test	50 $\mu\mu f$ to infinity, shunted by more than: 2000 Ω at 50 $\mu\mu f$ 400 Ω at 100 $\mu\mu f$ 30 Ω at 350 $\mu\mu f$ or more.
Short Test	Up to 20 μfd shunted by at least 10 Ω. (All types of capacitors except electrolytic.)

Test Frequencies -

Open Test	19 megacycles.
Short Test	60 cps.
Tube	1629 indicator eye tube.
Power Requirements	105-125 volts AC, 50/60 cps, 5 watts.
Dimensions	7-3/8" high x 4-11/16" wide x 4-1/8" deep.
Net Weight	3 lbs.
Shipping Weight	4 lbs.

All prices are subject to change without notice. The Heath Company reserves the right to discontinue instruments and to change specifications at any time without incurring any obligation to incorporate new features in instruments previously sold.

INTRODUCTION

The Heathkit Model IT-22 Capaci-Tester was designed to greatly reduce the time normally required to locate shorted or open capacitors. Usually, a faulty capacitor will be either shorted or open. While the Capaci-Tester will not measure the value or show the leakage of a capacitor, it will indicate whether the capacitor under test is shorted or open without removing the capacitor from the circuit.

A varying-shadow eye tube is used to provide a visual indication of the condition of the capacitor under test. Representative eye tube indications are shown on the front panel for reference.

CIRCUIT DESCRIPTION

To make the Circuit Description easier to follow, the Short Test and Open Test circuits will be described separately. A better understanding of the circuit may be obtained by referring to the Schematic Diagram (fold-out from Page 3) while reading this description.

SHORT TEST

Turning the switch to the Short Test position applies a 60 cps voltage to the capacitor under test, and to the grid of the tube through a current limiting circuit consisting of resistors R1 and R2, and capacitor C2. This AC voltage, from power transformer T1, is rectified by the grid of the tube, which produces enough bias to close the eye. If the capacitor under test is shorted, this AC voltage is shorted to ground through the capacitor, thus removing the bias from the tube, permitting the eye to open. A capacitor that is good (or open) will have no effect on the AC voltage. Therefore, the bias will remain on the tube, keeping the eye closed.

The Short Test is accurate as long as the capacitor under test normally has a reactance of more than 10 Ω at the 60 cps test frequency.

Permitting the switch to spring back from Short Test to the Short Check position discharges the capacitor under test, removing any voltage stored across the capacitor during the test. This switch action also grounds the grid of the tube, causing the eye to open.

OPEN TEST

With the switch in the Open Test position, section L1B of the oscillator coil, its stray capacitance, and capacitor C3 form a Hartley oscillator, using the triode section of the tube. Resistor R5 and capacitor C5 complete the grid circuit. The oscillator operates at a frequency of approximately 19 megacycles. Portion L1A of the oscillator coil and capacitor C7, form an absorption type circuit. Because winding L1A is so closely coupled to winding L1B of the oscillator coil, the absorption circuit pulls sufficient energy from winding L1B to cause the oscillator to stop operation. When the oscillator stops, there is no bias developed across grid resistor R5, causing the tube to draw maximum current. In this operating condition, the eye of the tube opens to its widest angle. An open capacitor connected across the test leads will have no effect on the absorption circuit, and the eye remains open, indicating the capacitor to be open. However, when a good (or shorted) capacitor is connected, the absorption circuit is detuned. This change permits the oscillator to function, causing the eye to close, indicating the capacitor to be OK (not shorted).

POWER SUPPLY

The power supply consists only of power transformer T1. No rectifier is needed, as the tube is self-rectifying. Current flows through the tube only during the positive half cycles of AC voltage on the plate. During the negative half cycles, no current flows through the tube. Since AC voltage is used on both the plate and grid of the tube, proper phasing of the transformer windings is necessary.

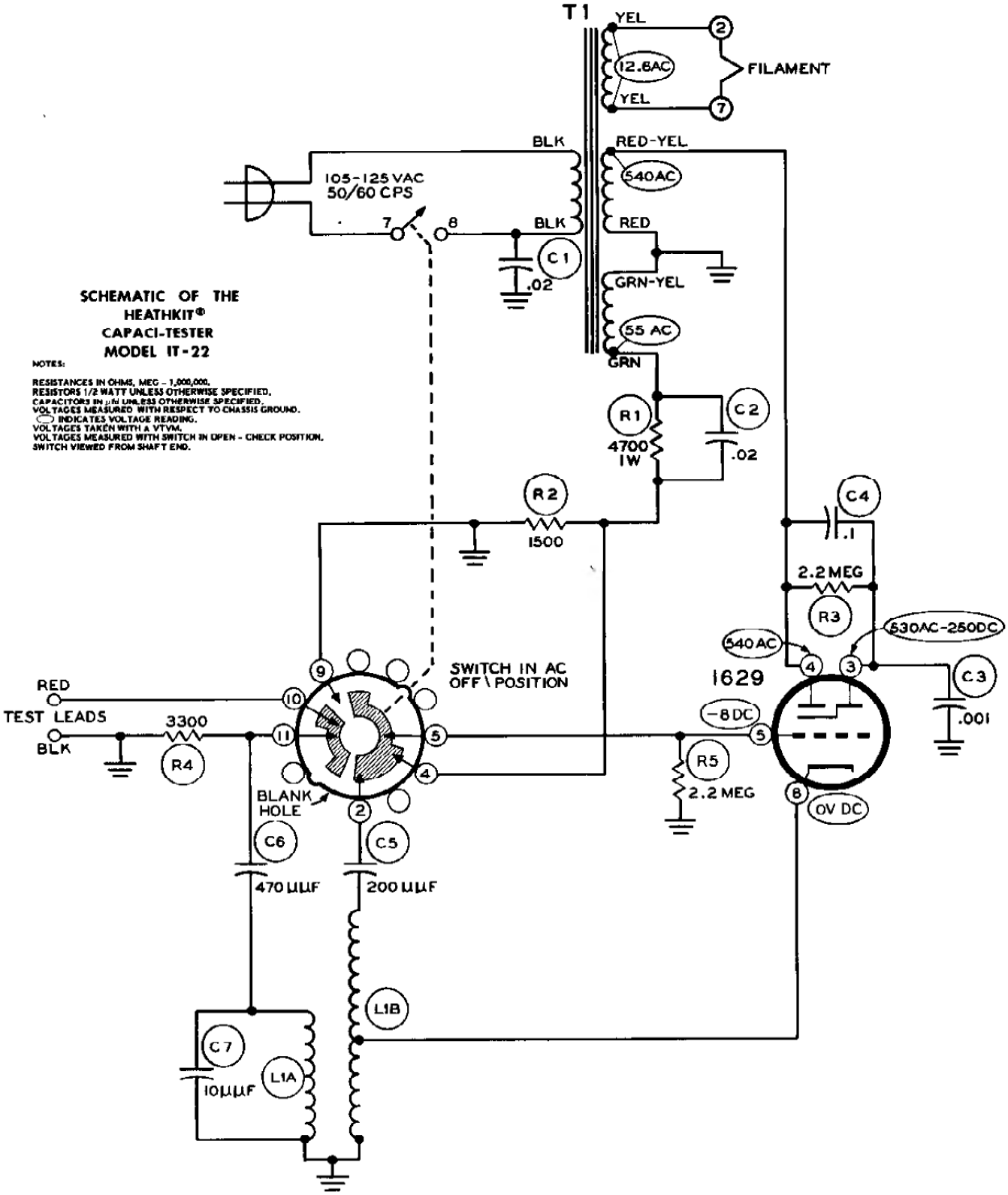

SCHEMATIC OF THE
HEATHKIT®
CAPACI-TESTER
MODEL IT-22

NOTES:

RESISTANCES IN OHMS, MEG - 1,000,000.
RESISTORS 1/2 WATT UNLESS OTHERWISE SPECIFIED.
CAPACITORS IN μfd UNLESS OTHERWISE SPECIFIED.
VOLTAGES MEASURED WITH RESPECT TO CHASSIS GROUND.
( ) INDICATES VOLTAGE READING.
VOLTAGES TAKEN WITH A VTVM.
VOLTAGES MEASURED WITH SWITCH IN OPEN - CHECK POSITION.
SWITCH VIEWED FROM SHAFT END.

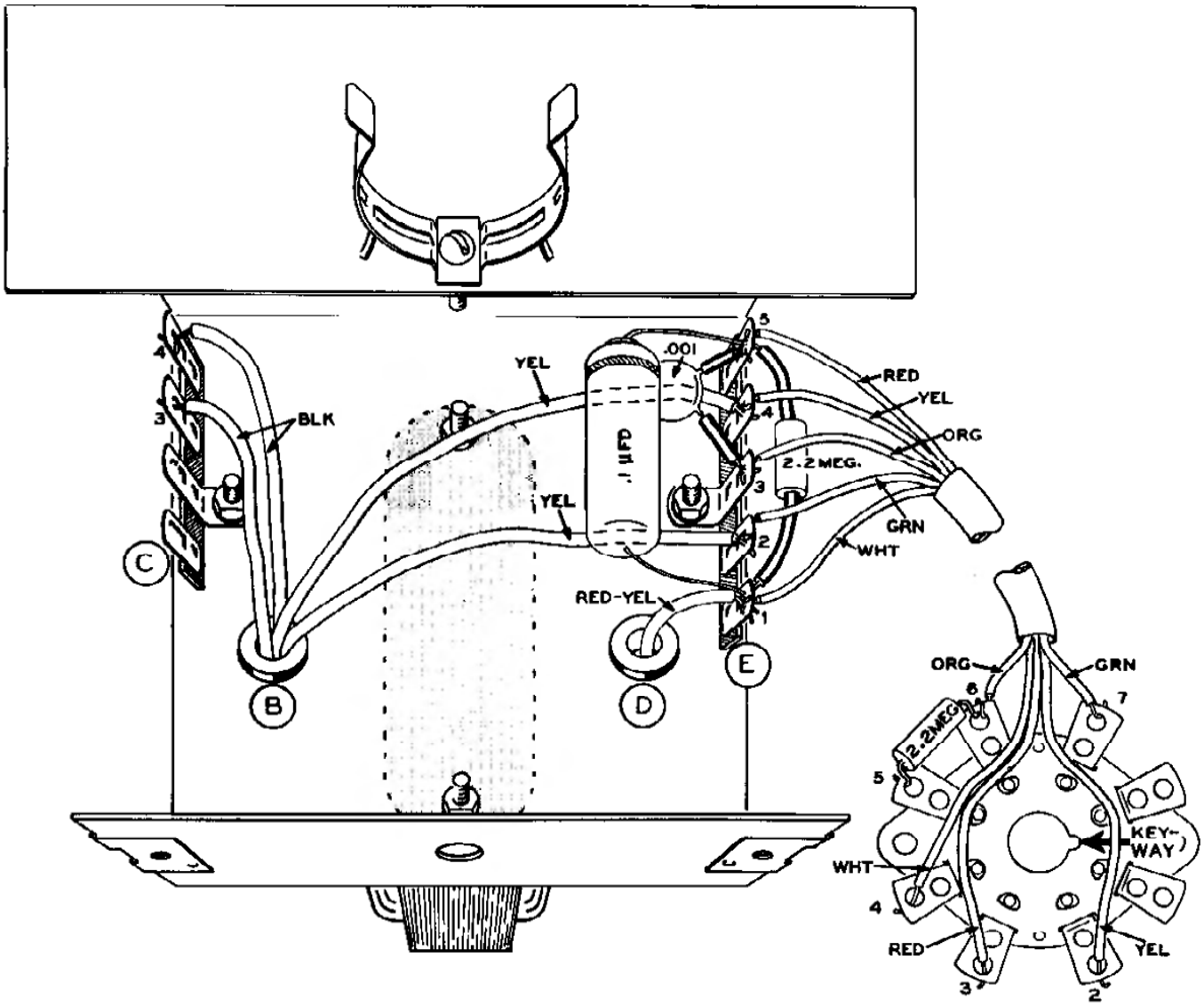
YEL
.001
RED
YEL
ORG
BLK
2.2 MEG.
YEL
GRN
WHT
RED-YEL
C
B
D
E
ORG
GRN
2.2 MEG.
KEY-WAY
WHT
RED
YEL

PICTORIAL 2

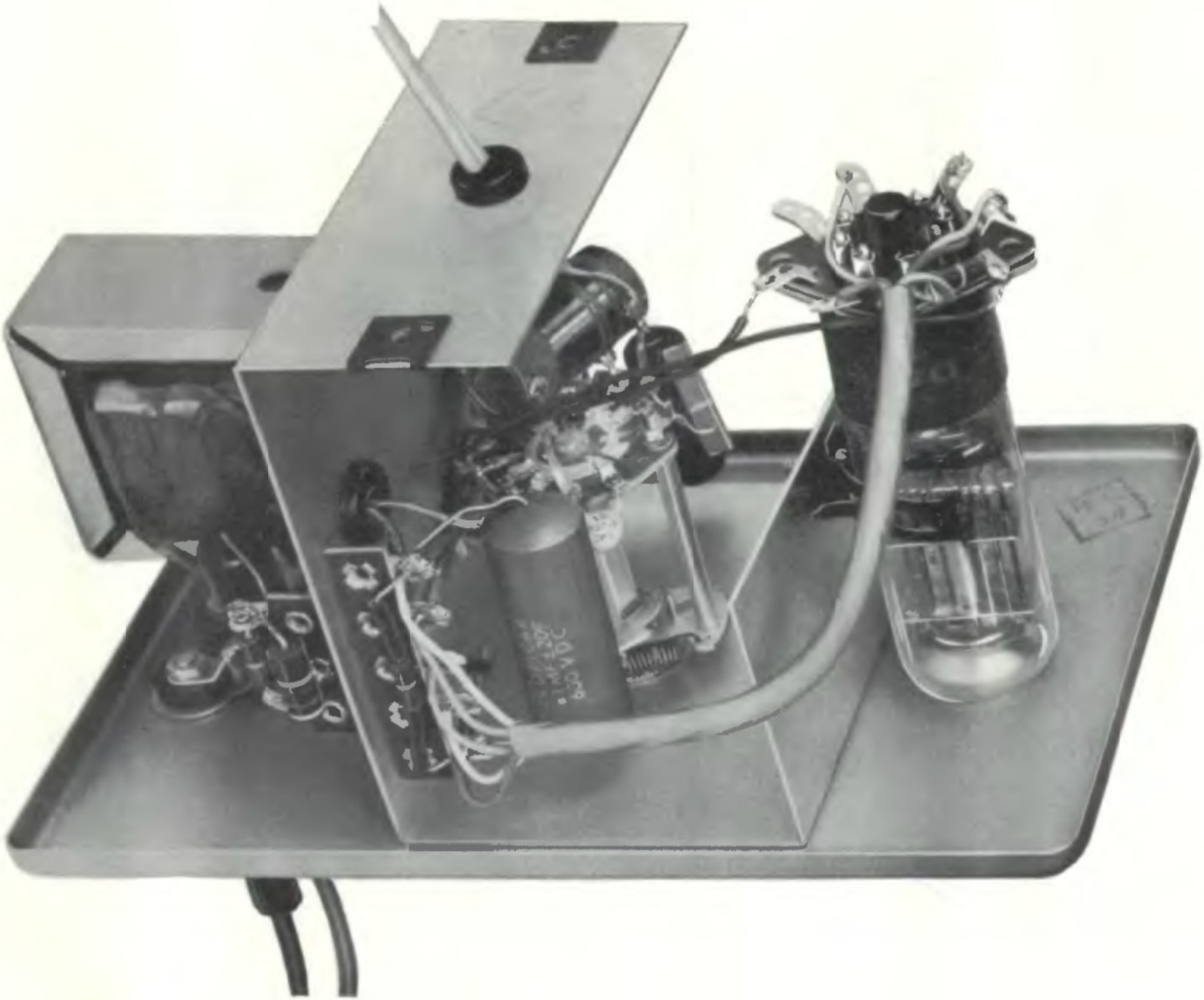

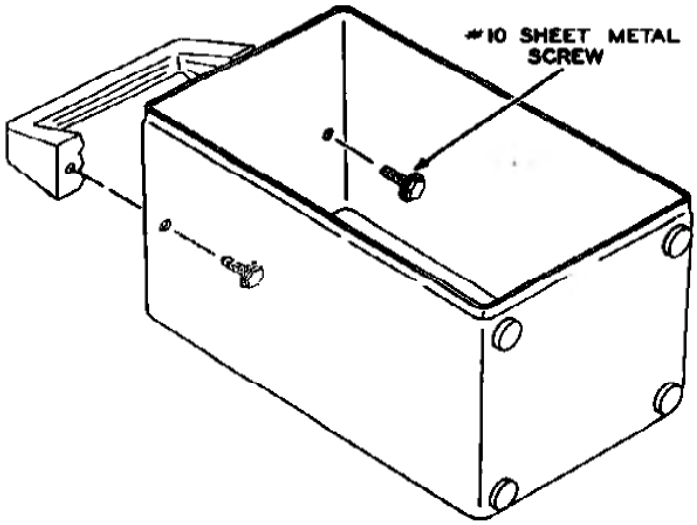

Detail 6E

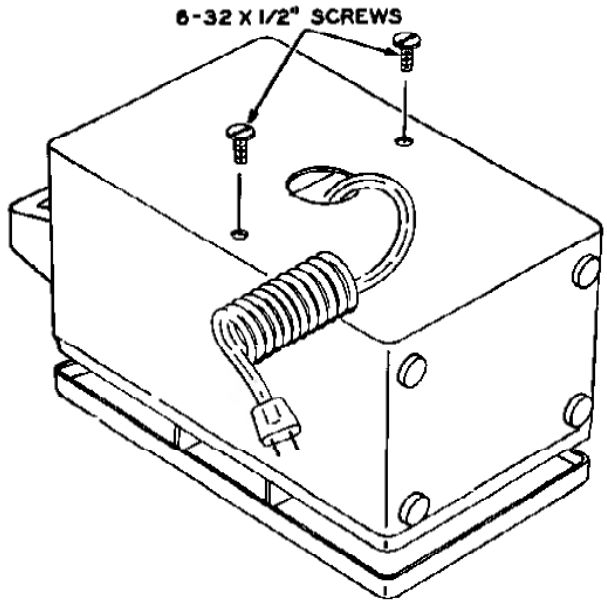

Detail 6F

OPERATION

SAFETY

Safety is an important consideration in any electrical work, especially when high voltages are involved. Always bear in mind that high voltages may appear in unpredictable places in defective equipment which you are testing. When examining or repairing a piece of electronic equipment, do not make the mistake of assuming that you are safe from an electrical shock simply because the equipment is turned off or unplugged. This is not always the case. Many pieces of electronic equipment contain capacitors as part of their circuitry. These capacitors often maintain their charge even after the equipment has been unplugged. If your body should complete a circuit between the two ends of a capacitor, a high voltage discharge will pass through you. It is a good idea to use a screwdriver blade to discharge any capacitors in the unit which you are working on.

Proper operation of the Capaci-Tester consists of interpreting the action of the indicator eye properly. Be sure to unplug the equipment being worked on before connecting the Tester to it. Switch the Tester to the OPEN-CHECK or SHORT-CHECK position, depending on which test you wish to perform first, and allow the instrument time to warm. Clip the test leads across the capacitor to be checked, then switch the Tester to the TEST position. If the eye is open in this position, replace the capacitor. If the eye is closed, make the other test. If the eye is open for the second test, replace the capacitor. If the eye is closed, the capacitor may be considered good. If the eye flutters in either TEST position when the capacitor is tapped sharply, the capacitor is intermittent and should be replaced.

This instrument as well as practically any other test equipment, has limitations. If the value of the capacitor under test is less than 100 $\mu\mu$f, it should be disconnected from its circuit before testing, just as should a capacitor which is shunted by less than about 30 Ω. Under these conditions (low value capacitance and/or low shunt resistance) the eye will not close completely. This could be misleading in the SHORT-TEST position, so a CHECK position is provided to shown an indication for a shorted capacitor. With a shunt resistance of less than about 5000 Ω, the eye will not close completely; with lower shunt resistance, the eye will close less. If the eye has any tendency whatsoever to close, however, the capacitor is not shorted. If, on the other hand, no change is apparent when

switching between the SHORT-CHECK and TEST positions, the capacitor is shorted. The instrument will not accurately check capacitors which are shunted by an inductance, if the reactance of the inductance is less than about 30 Ω at the test frequency; this means 60 cps for the short test, and 19 megacycles for the open test.

This instrument will check for opens or shorts in all types of capacitors except electrolytics, which may be checked for opens only. Inherent leakage and low reactance at the SHORT test frequency will result in an erroneous indication when checking electrolytic capacitors in the SHORT-TEST position.

Operated within its limits, the Capaci-Tester should prove to be an invaluable aid in finding the general run of capacitor troubles: open, shorted, and intermittent capacitors.

IN CASE OF DIFFICULTY

1. Recheck the wiring. Trace each lead in colored pencil on the Pictorial as it is checked. It is frequently helpful to have a friend check your work. Someone who is not familiar with the unit may notice something consistently overlooked by the constructor.

2. It is interesting to note that about 90% of the kits that are returned for repair, do not function properly due to poor connections and soldering. Therefore, many troubles can be eliminated by reheating all connections to make sure that they are soldered as described in the Proper Soldering Techniques section of this manual.

3. Make sure that the tube lights up properly.

4. Check the tube with a tube tester or by substitution of a tube of the same type and known to be good.

5. Check the values of the parts. Be sure that the proper part has been wired into the circuit, as shown in the pictorial diagrams and as called out in the wiring instructions.

6. Check for bits of solder, wire ends or other foreign matter which may be lodged in the wiring.

7. If, after careful checks, the trouble is still not located and a voltmeter is available, check voltage readings against those shown on the Schematic Diagram. NOTE: All voltage readings were taken with a vacuum tube voltmeter. Voltages may vary as much as 10%.

8. A review of the Circuit Description will prove helpful in indicating where to look for trouble.

SERVICE INFORMATION

SERVICE

If, after applying the information in this manual and your best efforts, you are still unable to obtain proper performance, it is suggested that you take advantage of the technical facilities which the Heath Company makes available to its customers.

The Technical Consultation Department is maintained for your benefit. This service is available to you at no charge. Its primary purpose is to provide assistance for those who encounter difficulty in the construction, operation or maintenance of HEATHKIT equipment. It is not intended, and is not equipped to function as a general source of technical information involving kit modifications nor anything other than the normal and specified performance of HEATHKIT equipment.