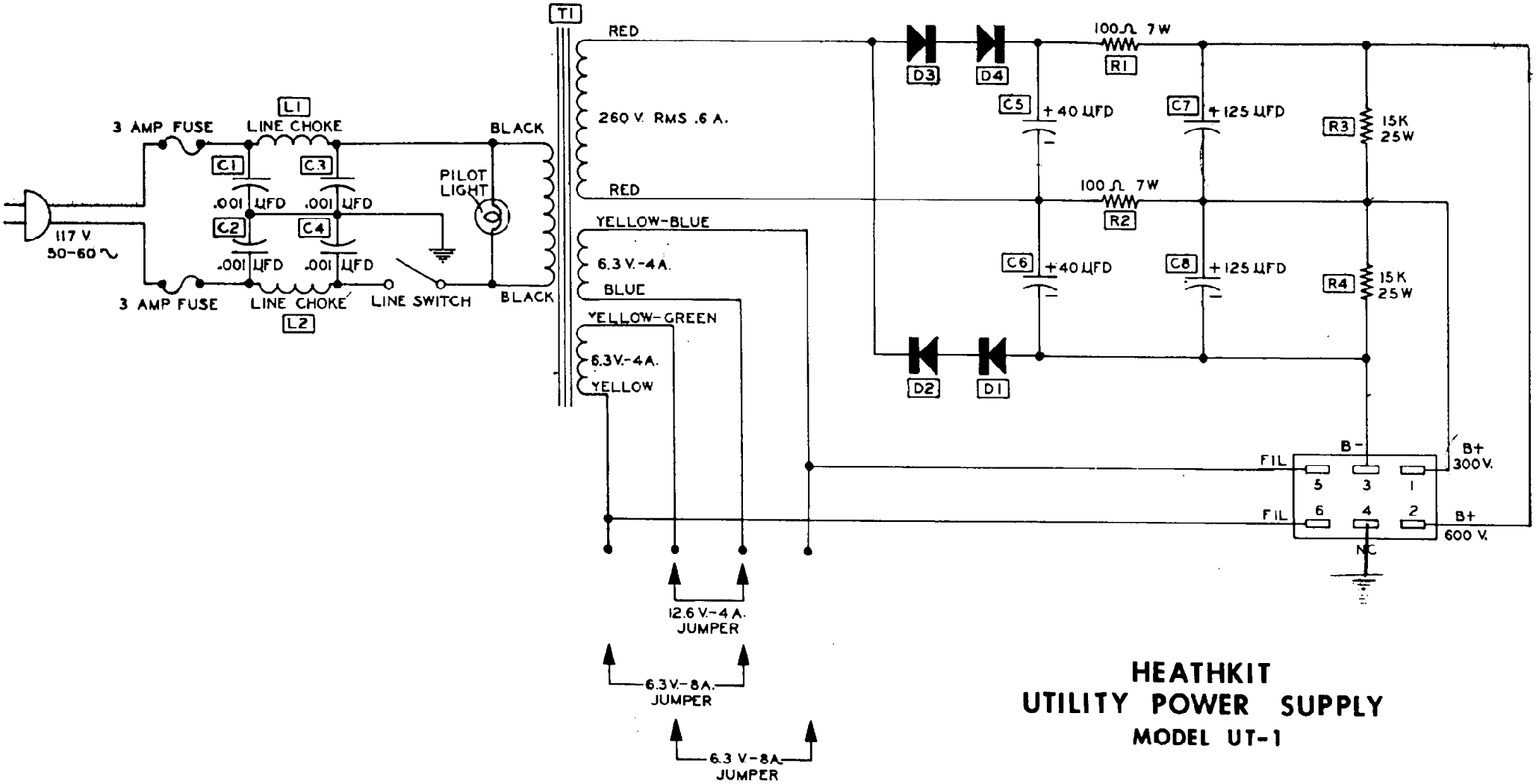

HEATHKIT
UTILITY POWER SUPPLY
MODEL UT-1