HANDBOOK OF

RADIO CIRCUITS

COPYRIGHT

RECEIVERS, TRANSMITTERS, TEST EQUIPMENT, POWER PACKS, TRANSRECEIVERS, EMERGENCY EQUIPMENT, ETC. ETC.

FULLY ILLUSTRATED, WITH CHARTS & DIAGRAMS.

SPECIALLY PREPARED

FOR THE SERVICES AND RADIO ENGINEERS

2/-

No. 22

BERNARDS (Publishers), LTD.

77, THE GRAMPIANS, WESTERN GATE, LONDON, W.6.

B.J. Collis.

SPECIAL NOTE TO PAGE 6.

With reference to theoretical diagram on page 6, it should be noted that care be taken not to earth the code practice oscillator to a physical earth. The earth shown in the diagram is simply intended to denote the actual metal chassis.

(1)

SIMPLE 5 METER 2 VALVE RECEIVER.

C1 — .00015 mfd. Variable Condenser.
C2 — Condenser, .00004 mfd.
C3 — " .0005 mfd.
C4 — " .0005 mfd.
C5 — " 1.0 mfd., 200 v.
C6 — " .01 mfd., 400 v.
C7 — Condenser, 1.0 mfd., 200 v.
C8 — " .01 mfd., 400 v.
R1 — 2 mges., ½ watt Resistor.
R2 — 1 meg., ½ watt "
R3 — 1,000 ohms, 1 watt "
R4 — Variable Resistor, 250,000 ohms.
L1 — 6½ turns 14 S.W.G. Copper Wire, ⅝" inside dia., 1" long, tapped ¼ turn up for cathode.
L2 — Lattice-wound R.F. Choke, 60 mh.
L3 — Audio Coupling Impedance, 3 to 1 ratio L.F. Auto-Transformer.
J1 — Insulated tip jack for aerial.
J-J — Jack for headphones.
SW — Filament Control S.P.S.T. Switch.
V1 — American Type 38 Valve.
V2 — " " 955 "

(23)

2½-5 METER TRANS-RECEIVER.

R1 — ½ megohm Volume Control.
R2 — 400 ohm 1 watt Resistor.
R3 — 5,000 ohm 1 watt "
R4 — 1 megohm 1 watt "
C1 — .1 mfd. Fixed Condenser.
C2 — .00025 mfd. Fixed Condenser.
C3 — 12 mfd. 200 volt Electrolytic Condenser.
C4 — .01 mfd. Fixed Condenser.
C5 — .0001 mfd. " "
C6 — .001 mfd. " "
C7 — .0001 mfd. " "
C8 — .00001 Variable Condenser.
C9 — .00002 Aerial Trimming Condenser.
C10 — .1 mfd. Fixed Condenser.
CH — 25 hy. 100 ma. Choke.
T1 — Triple Winding 4–1 L.F. Transformer.
B1 — 4.5 volt Battery.
V1 — American type 6C5 Valve.
V2 — " " 6F6 "
A — 78 turns, 34 S.W.G. d.s.c. Wire close wound ⅜" dia.
B — 78 " 34 " " " " " ⅜" "
L1 — 2½ metre band 3 turns, 12 S.W.G. Enamelled Wire ½" dia. 1¼" long.
5 metre band 8 " 12 " " " " "

Diagrams of the above sets on following pages

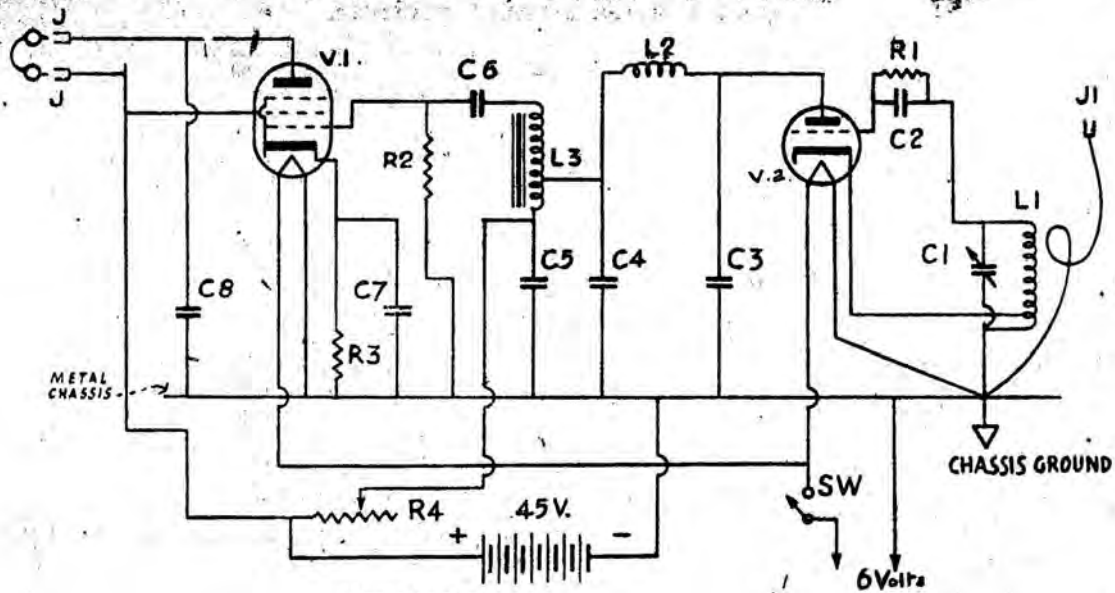
J
J
V.1.
C6
L2
R1
J1
C2
R2
L3
V.2
L1
C1
C5
C4
C3
C8
C7
R3
METAL CHASSIS
CHASSIS GROUND
SW
R4
45V.
+
-
6Volts

H.T. BATTERY

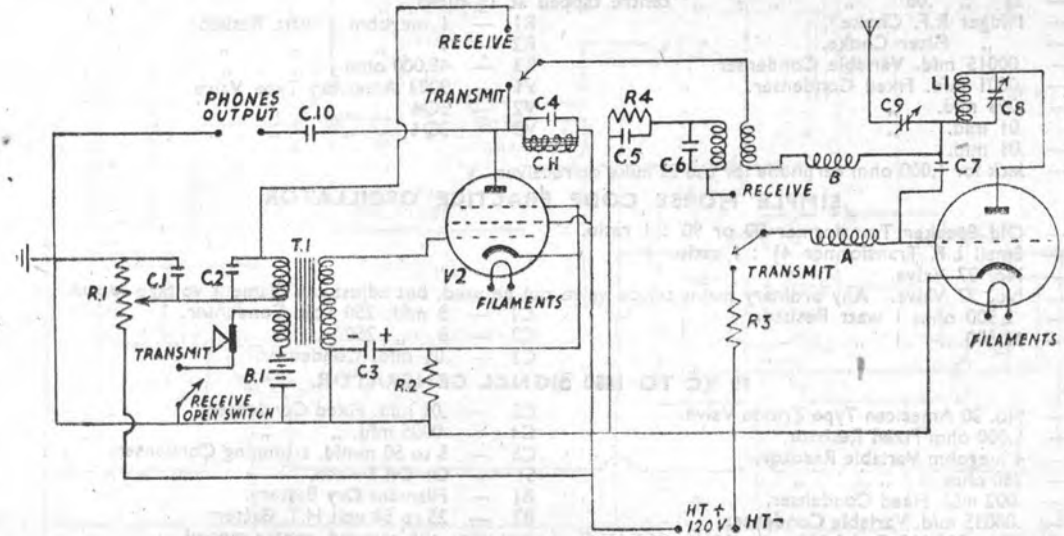
RECEIVE
TRANSMIT
PHONES OUTPUT
C.10
C4
CH
R4
C5
C6
RECEIVE
B
L1
C9
C8
C7
A
TRANSMIT
V.1
FILAMENTS
R3
T.1
V2
FILAMENTS
R.1
C.1
C2
TRANSMIT
B.1
C3
R.2
RECEIVE OPEN SWITCH
HT+ 120V
HT-

(3)

2½ METER TRANSRECEIVER.

L1 — 2¼ turns .08" Copper Wire ½" dia. close wound. This coil is mounted so as to vary coupling with L2.
L2 — 3¼ " .08" " " ½" " centre tapped at 1⅝ turns.
L3 — Midget R.F. Choke
L4 — " Filter Choke.
C1 — .00015 mfd. Variable Condenser.
C2 — .0001 mfd. Fixed Condenser.
C3 — .003 mfd. " "
C4 — .01 mfd. " "
C5 — .01 mfd. " "
J — Jack for 1,000 ohm earphone for use as mike or receiver.

R1 — 1 megohm ½ watt Resistor.
R2 — 1 " ½ " "
R3 — 45,000 ohm ½ " "
V1 — 9002 American Type Valve.
V2 — 3Q4 " " "
V3 — 3Q4 " " "

(4)

SIMPLE MORSE CODE PRACTICE OSCILLATOR.

T1 — Old Speaker Transformer 80 or 90 : 1 ratio.
T2 — Small L.F. Transformer 4½ : 1 ratio.
V1 — No. 27 Valve.
V2 — No. 27 Valve. Any ordinary mains triode valve can be used, but adjust the filament voltage to suit.
R1 — 2,500 ohm 1 watt Resistor.
R2 — 12,500 " 1 " "

C1 — 8 mfd. 250 volt Condenser.
C2 — 8 " 250 " "
C3 — .05 mfd. Condenser.

(6)

70 KC TO 1550 SIGNAL GENERATOR.

V1 — No. 30 American Type Triode Valve.
R1 — 5,000 ohm Fixed Resistor.
R2 — 4 megohm Variable Resistor.
R3 — 250 ohm " "
C1 — .002 mfd. Fixed Condenser.
C2 — .00035 mfd. Variable Condenser.

C3 — .01 mfd. Fixed Condenser.
C4 — .0005 mfd. " "
C5 — 5 to 50 mmfd. trimming Condenser.
S1 — On-Off Switch.
B1 — Filament Dry Battery.
B2 — 25 to 50 volt H.T. Battery.

L1 — 70 to 230 KC Coil 1,150 turns ½" dia. 36 S.W.G. copper wire, silk covered, centre tapped.
L2 — 215 to 525 KC Coil, 460 turns, ½" dia. 32 S.W.G. copper wire, silk covered, centre tapped
L3 — 515 to 1,550 KC Coil, 180 turns, ½" dia. 24 S.W.G. copper wire, silk covered, centre tapped.

Diagrams of the above sets on following pages.

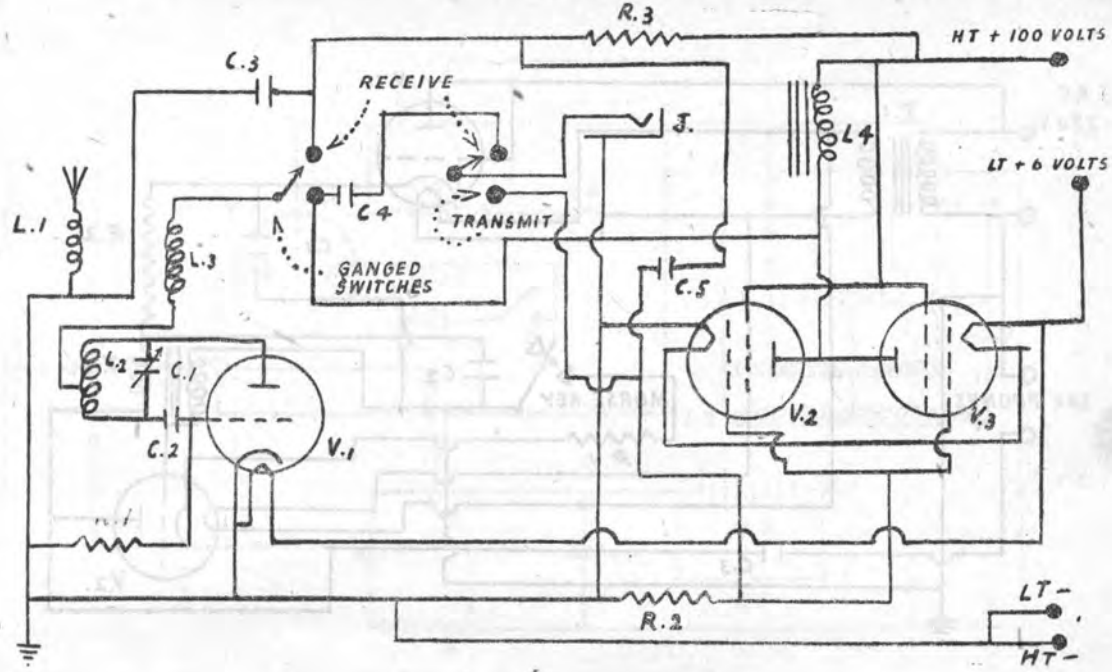
R.3
HT + 100 VOLTS
C.3
RECEIVE
J.
L4
LT + 6 VOLTS
L.1
C4
TRANSMIT
L.3
GANGED SWITCHES
C.5
L.2
C.1
C.2
V.1
V.2
V.3
R.2
LT -
HT -

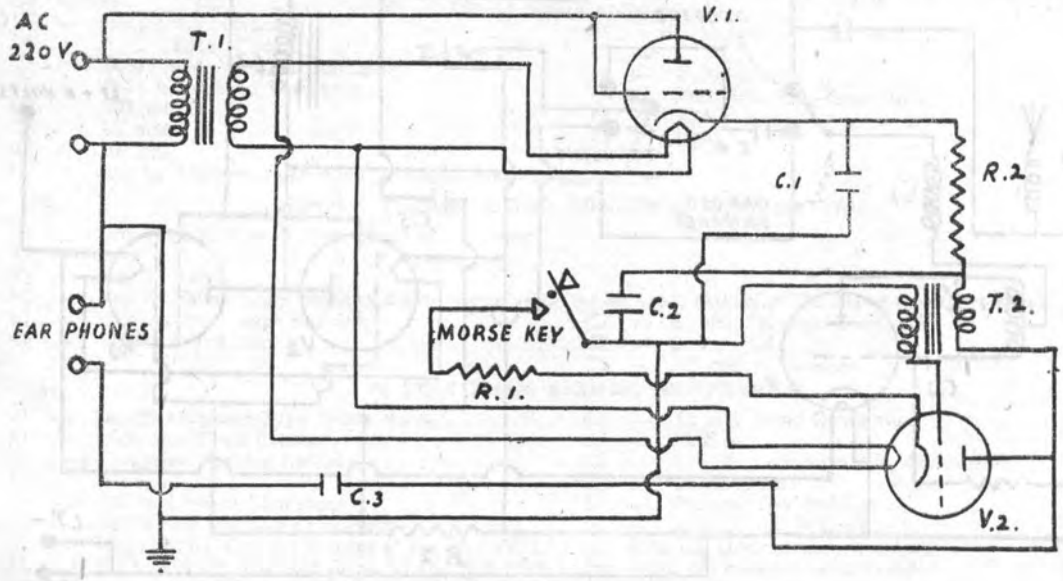

(4)

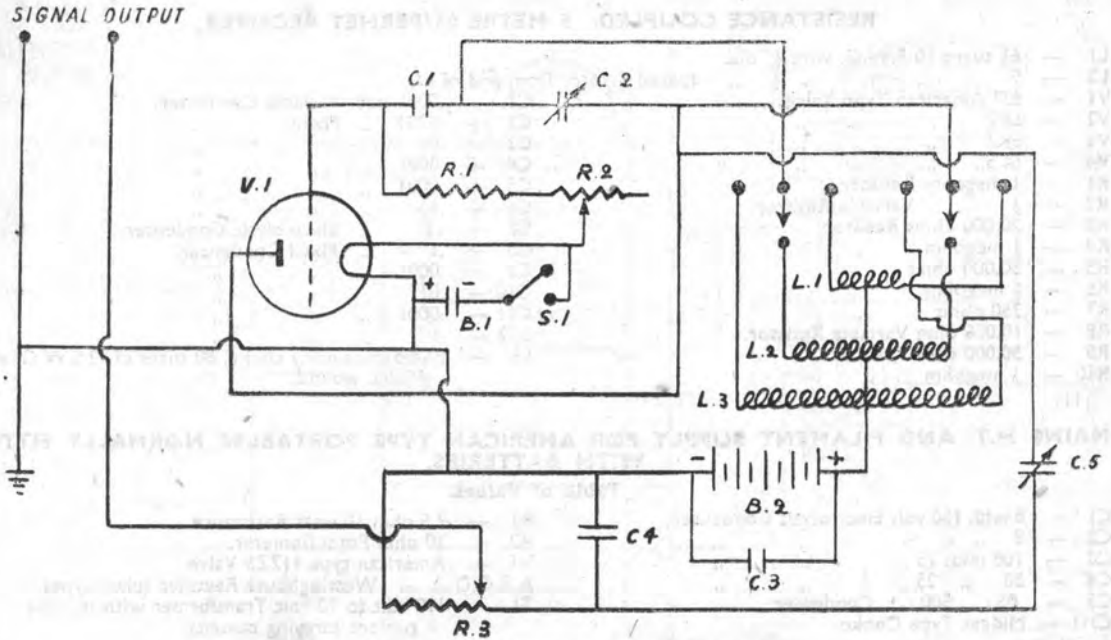

(6)

(8)

RESISTANCE COUPLED. 5 METRE SUPERHET RECEIVER.

L1 — 6½ turns 10 S.W.G. wire ½" dia.
L2 — 9 " " " " ½" " spaced 3/16th" from end of L1.
V1 — 6J7 American Type Valve.
V2 — 6K7 " " "
V3 — 6K7 " " "
V4 — 6C5 " " "
R1 — 1 megohm Resistor.
R2 — ½ " Variable Resistor.
R3 — 20,000 ohms Resistor.
R4 — ¼ megohm "
R5 — 50,000 ohms "
R6 — ¼ megohm "
R7 — 350 ohms "
R8 — 10,000 ohm Variable Resistor.
R9 — 50,000 ohm Resistor.
R10 — ¼ megohm "

C1 — .0001 mfd. Variable Condenser.
C2 — .0001 " Fixed "
C3 — .01 " " "
C4 — .0001 " " "
C5 — .0001 " " "
C6 — .1 " " "
C7 — 12 " Electrolytic Condenser.
C8 — .1 " Fixed Condenser.
C9 — .0001 " " "
C10 — .01 " " "
C11 — .0001 " " "
C12 — .1 " " "
L3 — Radio Frequency choke, 80 turns of 32 S.W.G. wire, ½" dia. wound.

(11)

MAINS H.T. AND FILAMENT SUPPLY FOR AMERICAN TYPE PORTABLES NORMALLY FITTED WITH BATTERIES.

Table of Values.

C1 — 8 mfd. 150 volt Electrolytic Condenser.
C2 — 8 " " " " "
C3 — 100 mfd. 25 " " "
C4 — 50 " 25 " " "
C5 — .05 " 500 " Condenser.
CH1 — Midget Type Choke.

R1 — 7.5 ohm 10 watt Resistance.
R2 — 20 ohm Potentiometer.
V1 — American type 117Z6 Valve.
A.B.C.D. — Westinghouse Rectifier (plate type).
T1 — 110 volt to 10 volt Transformer with suitable current carrying capacity.

Diagrams of the above sets on following pages.

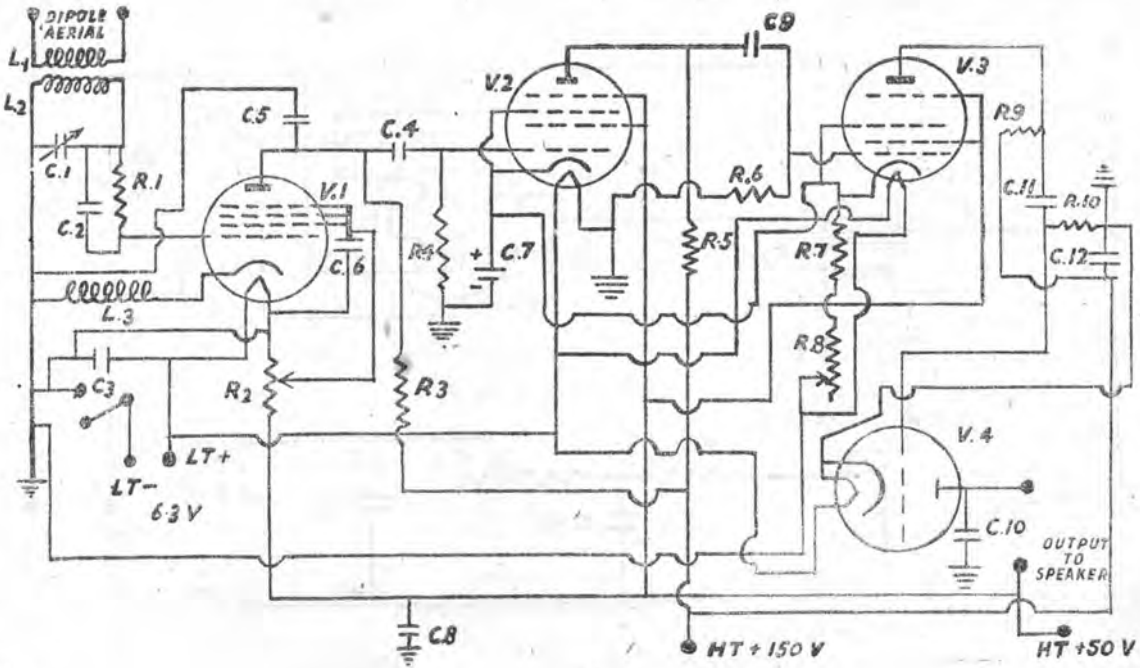
DIPOLE AERIAL
L1
L2
C.1
C.2
R.1
C.5
C.4
V.1
C.6
L.3
C3
LT+
LT−
6·3 V
R2
R3
R4
C.7
V.2
C9
R.6
R5
V.3
R9
C.11
R.10
C.12
R7
R8
V.4
C.10
OUTPUT TO SPEAKER
C8
HT + 150 V
HT +50 V

AC 110 VOLTS INPUT

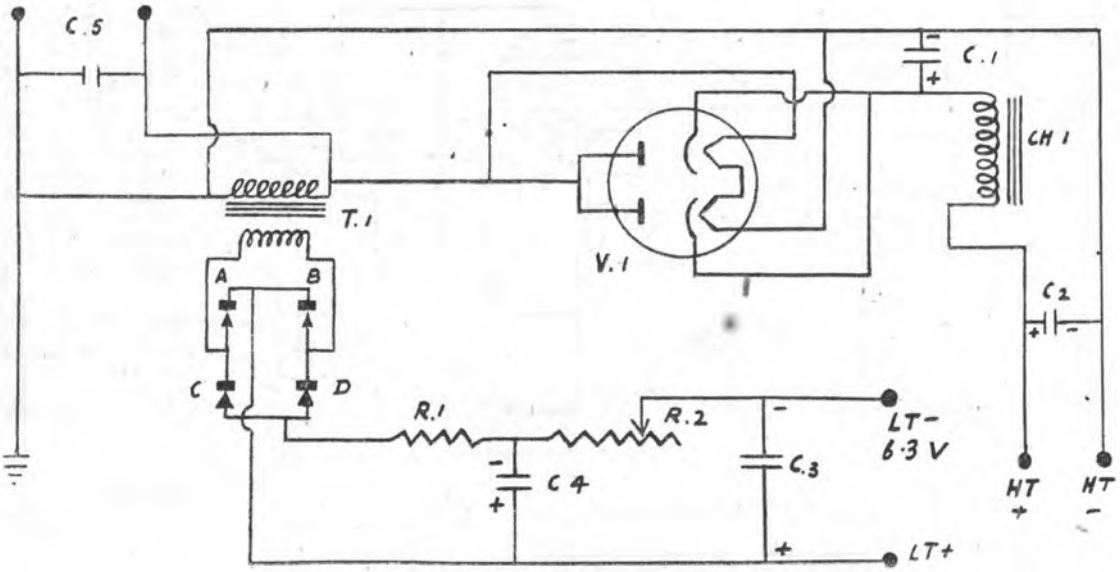

(12)

HIGH AMPLIFICATION REGENERATIVE R.F. PRESELECTOR.

V1 — 1852 American Type Valve.
C1 — .0005 mfd. Variable Condenser ganged to C2.
C2 — .0005 mfd. ,, ,, ,, C1.
C3 — .1 mfd. 500 volt Fixed Tubular Condenser.
C4 — .01 mfd. 500 ,, ,, ,, ,,
C5 — Same as C4.
R1 — 12,500 ohm Variable Resistance.
R2 — 200 ohm ½ watt Resistance.
R3 — 5,000 ,, ½ ,, ,,
R4 — 50,000 ,, ½ ,, ,,

DETAILS OF COILS L1 & L2 TO COVER RANGES FROM 10 METRES TO 550 METRES.

These can be arranged if required on a wavechange switch to save coil changing.

	8 to 16 metres.	15 to 30 metres.	28 to 45 metres.
L1	Primary 2 turns 1.125" dia. Secondary 8 ,, 1.125" dia. 1" length centre tapped 20 S.W.G. Close coupled.	Primary 3 turns 1.125" dia. Secondary 15 ,, 1.125" dia. 1" long centre tapped 20 S.W.G. Close coupled.	Primary 5 turns 1.5" dia. Secondary 24 ,, 1.5" dia. 1½" long. Tapped at 10 turns 20 S.W.G. Close coupled.
L2	Primary as L1 secondary Secondary as L1 primary 20 S.W.G. Close coupled.	Primary as L1 secondary Secondary 2 turns 1.125" dia. 20 S.W.G. Close coupled	Primary as L1 secondary but centre tapped Secondary 3 turns 20 S.W.G. Close coupled

	50 to 100 metres.	95 to 170 metres.	200 to 600 metres.
L1	Primary 8 turns 1½" dia. Secondary 44 ,, 1½" dia. 1½" long tapped 16 times 26 S.W.G. Close coupled	Primary 12 turns Secondary 80 ,, 1½" dia. closewound. Tapped at 20 turns 28 S.W.G. Close coupled	Primary 20 turns Secondary 180 ,, 1½" dia. closewound. Tapped at 35 turns 30 S.W.G. Close coupled
L2	Primary as L1 secondary Secondary 3 turns 26 S.W.G. Close coupled	Primary as L1 secondary Secondary 3 turns 26 S.W.G. Close coupled	Primary as L1 secondary Secondary 5 turns 30 S.W.G. Close coupled

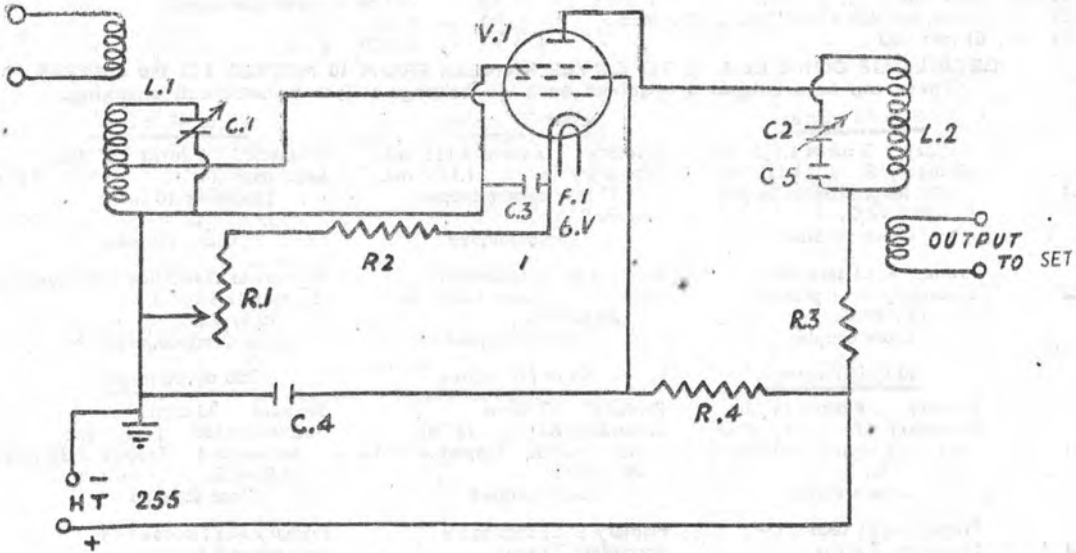
V.1
L.1
C.1
C2
L.2
C 5
C.3
F.1
6.V
R2
1
OUTPUT
TO SET
R.1
R3
C.4
R.4
HT 255
-
+

PORTABLE 3 VALVE SUPERHETRODYNE.

R1 — 300 ohm 1 watt Resistor.
R2 — 50,000 " 1 " "
R3 — 500 " 1 " "
R4 — 10,000 " 1 " "
R5 — 50,000 " 1 " "
T1 — 460KC Iron core I.F. Transformer.
T2 — 460KC " " " "
T3 — 460KC " " Beat Oscillator Transformer.
S.W.— Single Pole Single Throw Switch.
C1 — .0001 Variable Condenser.
C2 — .0001 " "
C3 — .00003 " " Midget.
C4 — .0001 mfd. Fixed Condenser.
C5 — .15 " " "
C6 — .15 " " "
C7 — .15 " " "
C8 — .15 " " "
C9 — 10 mfd. 25 volt electrolytic Fixed Condenser.
C10 — .00035 mfd. Fixed Condenser.
J — Output open circuit Jack for Headphones.
V1 — American Type 6K8 Valve.
V2 — " " 6K7 "
V3 — " " 6C8 "

COIL DETAILS.

160 metre band.

L1 — 72 turns 24 S.W.G. D.S.C. Wire, close wound, 1½" dia. Aerial coil 11 turns 24 S.W.G. D.S.C. Wire 5/16" from the grid coil.

L2 — 40 turns 24 S.W.G. D.S.C. Wire, 1½" dia., close wound. On this range connect C3 across 39 turns of the grid coil from earth end. Anode coil 12½ turns 22 S.W.G. D.S.C. wire 3/16" from grid coil.

80 metre band.

L1 — 46 turns 22 S.W.G. D.S.C. wire, 1½" dia. Aerial coil 5½ turns 24 S.W.G. D.S.C. Wire 5/16" from grid coil.

L2 — 18 turns 20 S.W.G. D.S.C. Wire, 1½" dia., close wound. On this range connect C3 across 17 turns of the grid coil from earth end. Anode coil 5½ turns 22 S.W.G. D.S.C. Wire 3/16" from grid coil.

40 metre band.

L1 — 19 turns 20 S.W.G. D.S.C. Wire close wound, 1½" dia. Aerial coil 4½ turns 20 S.W.G. D.S.C. Wire 5/16" from grid coil.

L2 — 8½ turns 20 S.W.G. Enamelled Wire, 9/16" length, 1½" dia. Wire C3 across 7 turns from earth end. Anode coil 4 turns 20 S.W.G. Enamelled, 3/16" from grid coil.

20 metre band.

L1 — 9 turns 18 S.W.G. Enamelled Wire, ½" length, 1½" dia. Aerial coil 3½ turns 18 S.W.G. Enamelled, ¼" from grid coil.

L2 — 4 turns 18 S.W.G. Enamelled Wire, 5/16" length, 1½" dia. Wire C3 across 3 turns from earth end. Anode coil 2½ turns 18 S.W.G. Enamelled, ⅛" from grid coil.

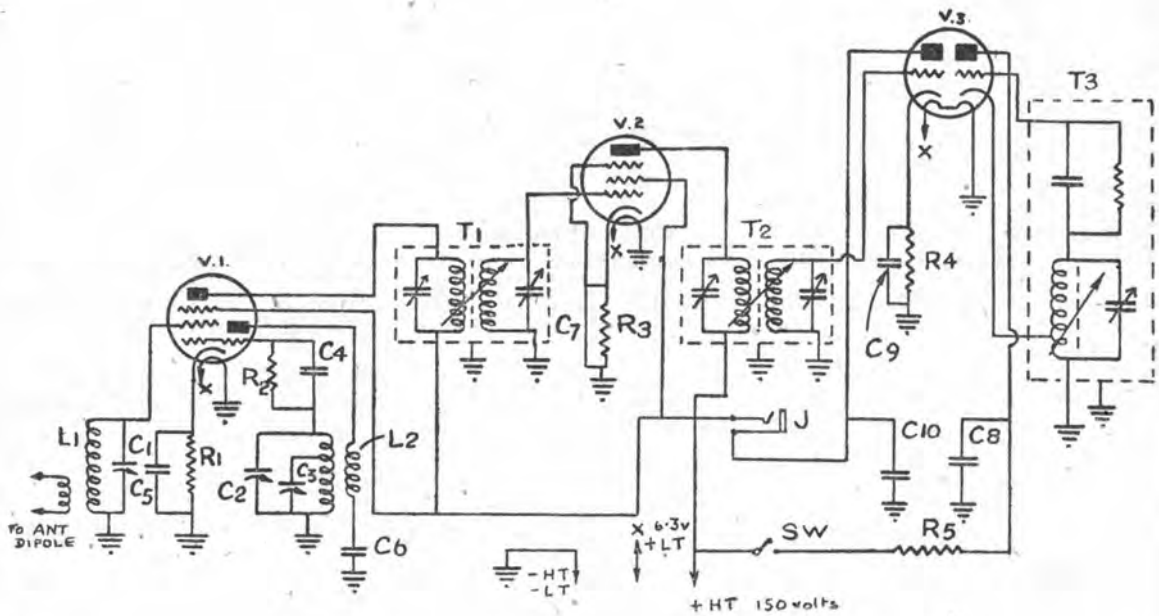
V.1.
V.2
V.3
T1
T2
T3
L1
L2
C1
C2
C3
C4
C5
C6
C7
C8
C9
C10
R1
R2
R3
R4
R5
J
SW
X
X
X
TO ANT DIPOLE
- HT
- LT
X 6·3v
+ LT
+ HT 150 volts

(13)

(14)

5-METRE BAND CRYSTAL CONTROLLED TRANSRECEIVER.

V1 — American Type 6F6 valve.
V2 — " " 6C5 "
V3 — " " 6U7 "
V4 — " " RK34 "
C1 — .005 mfd. Fixed Condenser.
C2 — .0025 " " "
C3 — .000075 mfd. Midget Variable.
C4 — .00003 " " "
C5 — .005 mfd. Fixed Condenser.
C6 — .005 " " "
C7 — .0015 " " "
C8 — Trimming Condenser.
C9 — .000015 mfd. Variable Condenser.
C10 — Trimming Condenser.
C11 — .0005 mfd. Fixed Condenser.
C12 — .0005 " " "
C13 — Trimming Condenser.
C14 — .000015 mfd. Variable Condenser.
C15 — .0001 " Fixed "
C16 — .001 " " "
C17 — 12 mfd. Fixed Condenser.
C18 — .2 " " "
C19 — .01 " " "
R1 — 400 ohm 20 watt Resistor.
R2 — 35,000 " 5 " "
R3 — 1,500 " 1 " "
R4 — 125,000 ohm 1 " "
R5 — 100,000 " 1 " "
R6 — 52,500 " 1 " "
R7 — 50,000 " 1 " "
R8 — 400 " 1 " "
T1 — Transreceiver Transformer, Input type.
CH — 30 henry 100 ma. Choke.
RFC1 22 mh. R.F. Choke.
RFC2 2 mh. " "
Switch 4-pole 2-throw Switch.
L1 — 6½ turns 12 S.W.G. Enamelled Wire, ¾" dia.
L2 — 4½ " 12 " " " ¾" "
L3 — 8 " 12 " " " ¾" "
L4 — 5 metre band Coil.

(7)

TWIN CHANNEL L.F. MIXER.

R1 — 50,000 ohm Variable Resistor.
R2 — 50,000 ohm " "
R3 — 2,500 ohm Fixed Resistor.
R4 — 1 megohm " "
R5 — 1 mehohm " "
R6 — .25 megohm " "
R7 — .25 megohm Fixed Resistor
R8 — 1 megohm Fixed Resistor.
C1 — 8 mfd. 25 volt Fixed Condenser.
C2 — .1 mfd. Fixed Condenser.
V1 — 6N7 American Type Valve.

Diagrams of the above sets on following pages.

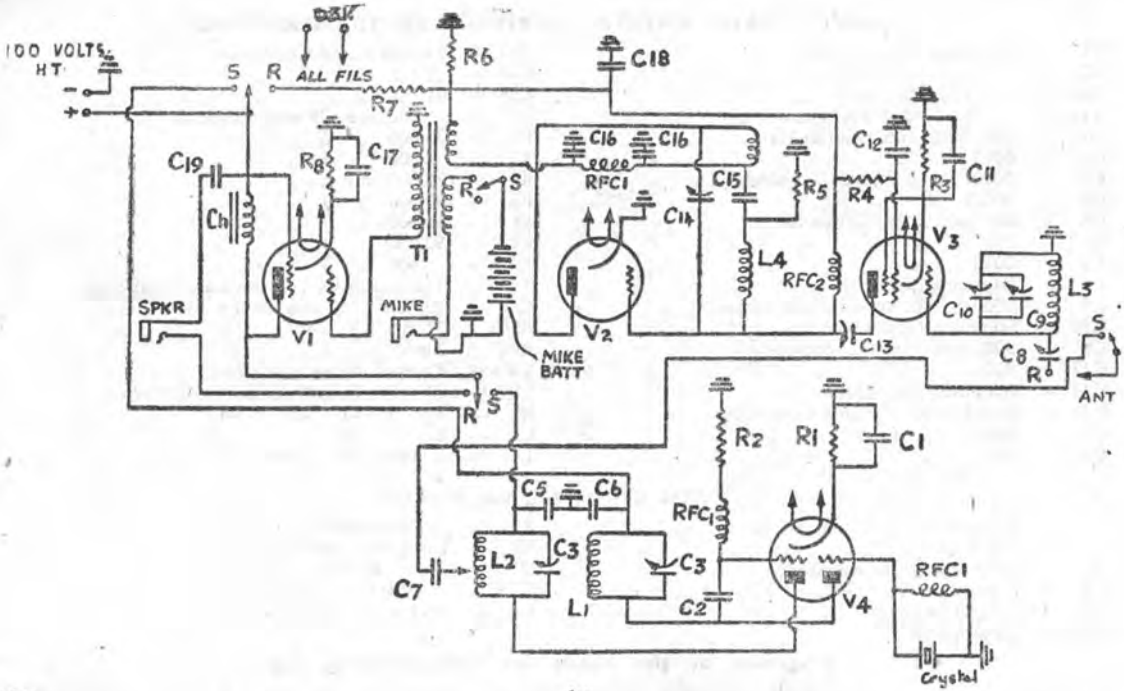
100 VOLTS HT
S
R
ALL FILS
R7
R6
C18
C19
Ch
R8
C17
T1
R
S
C16
C16
RFC1
C15
R5
C14
L4
RFC2
C12
R4
R3
C11
V3
C10
C9
L3
C13
C8
R
S
ANT
SPKR
V1
MIKE
V2
MIKE BATT
R
S
R2
R1
C1
C5
C6
RFC1
L2
C3
C3
L1
C7
C2
V4
RFC1
Crystal

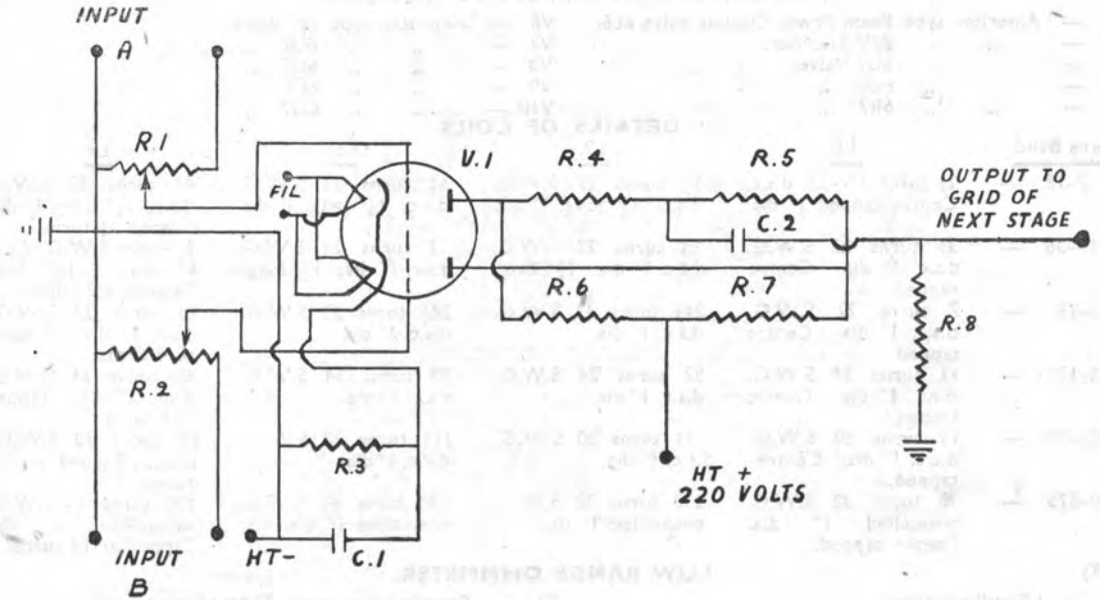
INPUT
A
R.1
FIL
V.1
R.4
R.5
C.2
OUTPUT TO
GRID OF
NEXT STAGE
R.6
R.7
R.8
R.2
R.3
HT +
220 VOLTS
INPUT
B
HT-
C.1

(15)

10-VALVE SUPERSENSITIVE SUPERHETRODYNE RECEIVER.

(Component values are shown on the circuit diagrams).

V1 — American type Beam Power Output Valve 6L6.
V2 — " " 83V Rectifier.
V3 — " " 6U7 Valve.
V4 — " " 6U7 "
V5 — " " 6R7 "
V6 — American type Iv Valve.
V7 — " " 6U7 "
V8 — " " 6U7 "
V9 — " " 6L7 "
V10 — " " 6SJ7 "

DETAILS OF COILS.

Metre Band.	L1.	L2.	L3.	L4.
7–18 —	2½ turns S.W.G. d.s.c. Centre tapped 1" dia.	5½ turns 22 S.W.G. d.s.c. 1⅛" long, 1" dia.	5½ turns 22 S.W.G. d.s.c. 1⅛" long, 1" dia.	4¾ turns 22 S.W.G. d.s.c. 1¼" long, 1" dia. Tapped 1¼ turns.
17–36 —	3½ turns 22 S.W.G. d.s.c. 1" dia. Centre tapped.	13 turns 22 S.W.G. d.s.c. 1" dia. 1¼" long.	13 turns 22 S.W.G. d.s.c. 1" dia. 1¼" long.	13 turns S.W.G. d.s.c. 1" dia. 1¼" long Tapped at 2½ turns.
34–78 —	7 turns 22 S.W.G. d.s.c. 1" dia. Centre tapped	24½ turns 22 S.W.G. d.s.c. 1" dia.	24½ turns 22 S.W.G. d.s.c. 1" dia.	23 turns 22 S.W.G. d.s.c. 1" dia. Tapped at 4 turns.
75–150 —	11 turns 24 S.W.G. d.s.c. 1" dia. Centre tapped.	52 turns 24 S.W.G. d.s.c. 1" dia.	52 turns 24 S.W.G. d.s.c. 1" dia.	46 turns 24 S.W.G. d.s.c. 1" dia. Tapped at 7 turns.
145–250 —	13 turns 30 S.W.G. d.c.c. 1" dia. Centre tapped.	111 turns 30 S.W.G. d.c.c. 1" dia.	111 turns 30 S.W.G. d.c.c. 1" dia.	88 turns 30 S.W.G., d.c.c. Tapped at 10½ turns.
240–575 —	20 turns 32 S.W.G. enamelled 1" dia. Centre tapped.	230 turns 32 S.W.G. enamelled 1" dia.	230 turns 32 S.W.G. enamelled 1" dia.	195 turns 32 S.W.G. enamelled 1" dia Tapped at 13 turns.

(9)

LOW RANGE OHMMETER.

M1 — 1.5 milliammeter.
R1 — 750 ohm Precision Resistor.
R2 — 500 " " "
S1 — Double Pole Double Throw Switch.
B1 — 1.5 volt Dry Battery.
Calibrate Dial of meter against known Precision Resistors.

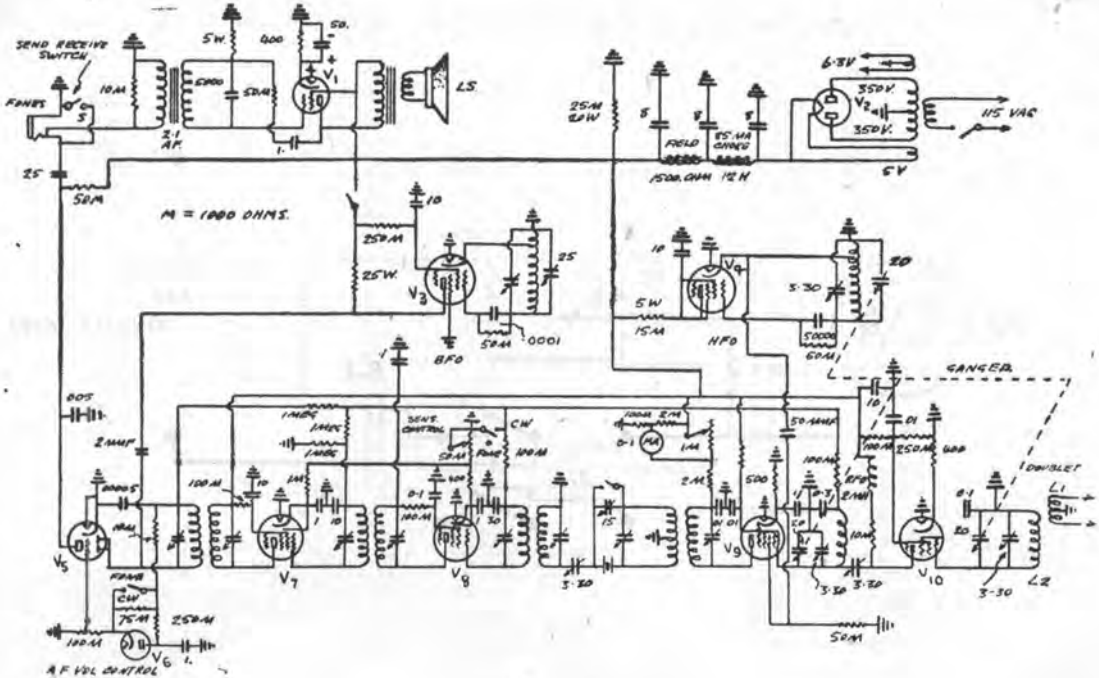
SEND RECEIVE SWITCH
PHONES
5W.
400
50.
V1
LS.
10.M
2:1 A.F.
25
50M
M = 1000 OHMS.
250.M
25W.
V3
BFO
25
50M
.0001
25.M 25W
5
8
8
FIELD
85.MA CHOKE
1500 OHM 12 H
6.3V
350V.
V2
350V.
115 VAC
5V
10
V4
5W
15M
HFO
3-30
20
5000
60M
GANGED
.005
2MMF
1MEG
1MEG
1MEG
SENS. CONTROL
CW
50M
PHONE
100M
100M 2M
0-1
PM
1M
50MMF
10
.01
100M
250M
400
DOUBLET
L1
100M
10
1M
0-1
100M
30
2M
500
100M
2M
.01
V5
V7
V8
V9
V10
L2
3-30
3-30
3-30
3-30
PHONE
CW
75M
250M
100M
V6
A.F. VOL CONTROL
50M

(15)

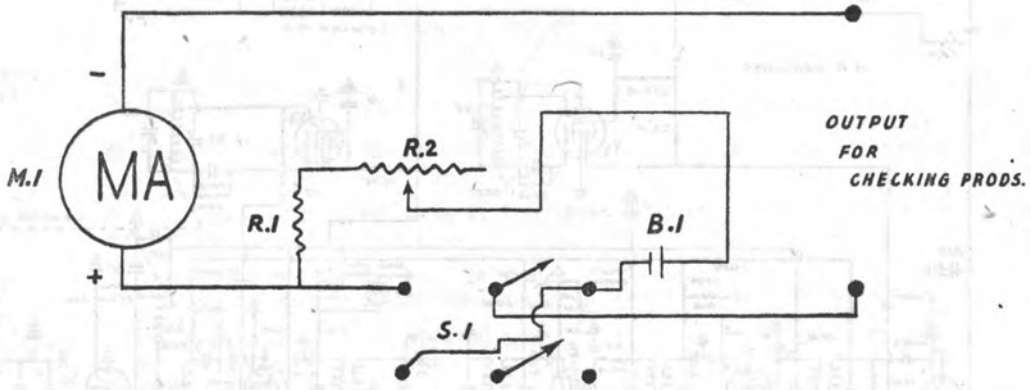
-
M.I
MA
+
R.1
R.2
B.1
S.1
OUTPUT
FOR
CHECKING PRODS.

SUPERSELECTIVE 10 VALVE FULL WAVE BAND COVERAGE SUPERHETRODYNE

R1 — 450 ohm 1 watt Resistor.
R2 — 75,000 „ Variable „
R3 — 10,000 „ 1 watt „
R4 — 500 „ 1 „ „
R5 — 20,000 „ 1 „ „
R6 — 1,750 „ 1 „ „
R7 — 40,000 „ Variable „
R8 — 250 „ 1 watt „
R9 — 100,000 „ 5 „ „
R10 — 1,000 „ 2 „ „
R11 — 2,500 „ Variable „
R12 — 1 megohm 1 watt „
R13 — 1 „ 1 „ „
R14 — 6,000 ohm 1 „ „
R15 — 25,000 „ 1 „ „
R16 — 25,000 „ 50 Variable „
R17 — 22,500 „ 1 watt „
R18 — 50,000 „ 1 „ „
R19 — 50,000 „ 1 „ „
R20 — 110,000 „ 1 „ „
R21 — 600,000 „ 1 „ „
R22 — 1 megohm 1 „ „
R23 — 1 „ 1 „ „
R24 — 45,000 ohm 1 „ „
R25 — ½ megohm Vol. Control „
R26 — 2,000 ohm 1 watt „
R27 — 1,000 „ 1 „ „
R28 — ¼ megohm 1 „ „
R29 — 450 ohm 10 „ „

CH1 — 15 henry 100 ma. Choke.
CH2 — 15,000 ohm Speaker Field.
T1 — 465 kc. iron core I.F. Transformer.
T2 — 465 kc. „ „ „ „
T3 — 465 kc. „ „ „ „
T4 — 465 kc. „ „ „ „
T5 — 465 kc. „ „ „ „
T6 — 465 kc. „ „ „ „
T7 — 750 volt, centre tapped, 100 ma., 6.3 volt 5 amps., 5 volt. 2½ amps. Mains Transformer.
T8 — Speaker Output Transformer.
M — 0-1 D.C. ma.
C1 — .000015 Variable Condenser.
C2 — .000025 „ „
C3 — .005 mfd. Fixed „
C4 — .02 mfd. „ „
C5 — Trimming Condenser.
C6 — .000015 Variable Condenser.
C7 — .05 mfd. Fixed „
C8 — .02 mfd. „ „
C9 — .02 mfd. „ „
C10 — .000005 coupling „
C11 — .02 mfd. Fixed „
C12 — .15 mfd. „ „
C13 — .15 mfd. „ „
C14 — .025 mfd. „ „
C15 — .000005 Coupling „

C16 — .02 mfd. Fixed Condenser.
C17 — .15 mfd. „ „
C18 — .15 mfd. „ „
C19 — .000005 Coupling „
C20 — .0001 mfd. Fixed „
C21 — 6 mfd. Electrolytic „
C22 — 10 mfd. „ „
C23 — 10 mfd. „ „
C24 — 10 mfd. „ „
C25 — .000015 Variable „
C26 — .00003 „ „
C27 — .00015 mfd. fixed „
C28 — .005 mfd. „ „
C29 — .000003 coupling „
C30 — Trimming „
C31 — .015 mfd. Fixed „
C32 — 1 mfd. „ „
C33 — .025 mfd. „ „
C34 — 1 mfd. „ „
C35 — .0015 mfd. „ „
C36 — .1 mfd. „ „
C37 — 10 mfd. Electrolytic „
C38 — .025 mfd. Fixed „
C39 — .00015 mfd. „ „
C40 — .00015 mfd. „ „
C41 — .015 mfd. „ „
S1 — Mains Switch.
S2 — Reception Switch.

(16) *continued*

S3 — Double - pole Single - throw Switch for Beat Frequency Oscillator and Meter Switch.
RFC — 3 mh. 150 ma. Choke.
V1 — American type 6U7 Valve.
V2 — " " 6U7 "
V3 — " " 6J8 "
V4 — " " 6U7 "
V5 — American type 83 Rectifier Valve.
V6 — " " 6F6 Output "
V7 — " " 6C5 Triode "
V8 — " " 6H6 Valve.
V9 — " " 6C5 Triode Valve.
V10 — " " 6F6 Output "

COIL DETAILS

All Coils 1¼" in diameter.

Metre Band.	L1 R.F.	L2 Detector.	L3 Oscillator.
7–18 —	4½ turns, 20 S.W.G. ¾" long. Tapped at ½ turn Aerial Coil 2 turns—24 S.W.G.	4½ turns, 20 S.W.G. ¾" long.	4½ turns, 20 S.W.G. ¾" long.
17–35 —	7 turns, 20 S.W.G. 1" long. Tapped at ¾ turn Shunt Secondary with .00005 mfd. Condenser. Aerial Coil 3 turns—24 S.W.G.	7 turns, 20 S.W.G. 1" long Shunt Secondary with .00005 mfd. Condenser.	7 turns, 20 S.W.G. 1" long. Tapped at 2½ turns Shunt Secondary with .00005 mfd. Condenser.
36–68 —	24 turns, 20 S.W.G. 1" long. Tapped at ¾ turn Aerial Coil 3 turns, 24 S.W.G.	24 turns, 20 S.W.G. 1" long.	22 turns, 24 S.W.G. 1" long. Tapped at 4½ turns.
66–150 —	44 turns, 24 S.W.G. 1¼" long. Tapped at 1½ turns Aerial Coil 4½ turns, 24 S.W.G.	44 turns, 24 S.W.G. 1¼" long.	34 turns, 24 S.W.G. 1" long. Tapped at 6½ turns.
148–240 —	90 turns, 28 S.W.G. 1¼" long. Tapped at 2½ turns Aerial Coil 8 turns, 32 S.W.G.	90 turns, 28 S.W.G. 1¼" long.	70 turns, 28 S.W.G. 1" long. Tapped at 8½ turns.
240–550 —	180 turns, 30 S.W.G. 1¼" long. Tapped at 3½ turns Aerial Coil 15 turns, 32 S.W.G.	180 turns, 30 S.W.G. 1¼" long.	140 turns, 30 S.W.G. 1" long. Tapped at 11 turns.

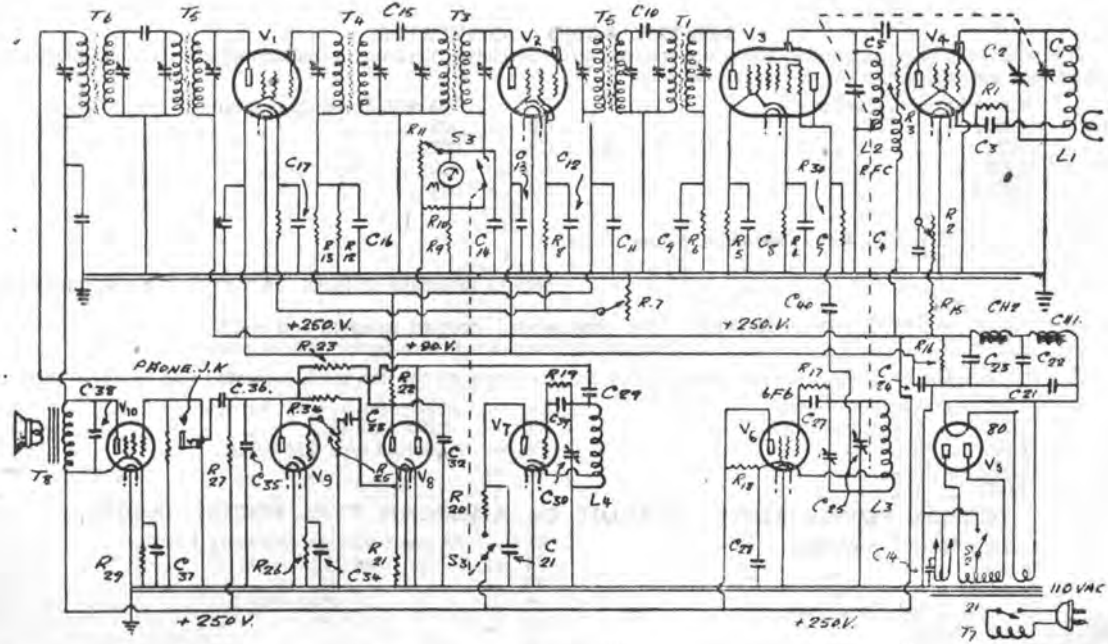
T6
T5
V1
T4
C15
T3
V2
T2
C10
T1
V3
V4
C2
C3
R1
L1
R11
S3
C17
C12
R30
L2
RFC
R3
R10
R9
C16
C13
R8
C11
C9
R6
R5
C8
R4
C7
C4
R2
R13
R12
R7
C40
R15
CH2
CH1
+250.V.
+90.V.
+250.V.
R23
PHONE.J.K
C38
C36.
R17
C29
C28
C26
C25
C23
C22
C21
6F6
V10
R34
C33
R22
V7
V6
80
V5
T8
R27
C35
V9
R25
V8
C32
C30
L4
R18
L3
R20
C27
C14
R29
C37
R26
C34
R21
S31
C21
110VAC
+250 V.
+250V.
T7

(17)

5-METER BAND CONVERTER.

This unit is specially designed to allow any ordinary Superhetrodyne receiver to function efficiently for the reception of telephony and morse on the 56 megacycle band.

C1 — .000025 Variable Condenser.
C2 — .000002 ,, ,,
C3 — .00001 ,, ,,
C4 — .00005 ,, ,,
C5 — .000025 ,, ,,
C6 — .0001 ,, ,,
C7 — .005 mfd. Fixed Condenser
C8 — .005 ,, ,, ,,
C9 — .0002 ,, ,, ,,
C10 — .0001 ,, ,, ,,
C11 — .005 ,, ,, ,,

L1 — 4 turns, 12 S.W.G. Enamelled Wire ⅝" long, 1" dia.
L2 — 5 ,, 16 ,, ,, ,, ⅝" ,, 1" ,,
L3 — 12½ ,, 12 ,, ,, ,, 1" ,, 1" ,, wound internally 6 turns, 24 S.W.G. d.s.c. as coupling for output.
L4 — 3 turns, 16 S.W.G. Enamelled Wire 1" dia. close wound, coupled to earth end of L5
L5 — 1½ ,, 16 ,, ,, ,, ⅝" long, 1" dia. tapped at ¾" turn-up for cathode point.

NOTE.—The couplings between L1 and L2 are 2 turns each with the link wires separated side by side ⅝" apart.

R1 — 50,000 ohm Volume Control.
R2 — 2,000 ,, 1 watt Resistor.
R3 — 12,500 ,, 15 ,, ,,
R4 — 12,500 ,, 15 ,, ,,
R5 — 3,000 ,, 1 ,, ,,
R6 — 15,000 ohm 1 watt Resistor
R7 — 4,500 ,, 1 ,, ,,
V1 — American type 954 Valve.
V2 — ,, ,, 6J5 ,,

(2) **NORMAL POWER SUPPLY CIRCUIT OF AMERICAN TYPE MIDGET RADIO.**

C1 — Output Filter Condenser.
C2 — Input ,, ,,
C3 — Speaker ,, ,,
C4 — .01 mfd. Fixed Condenser.
CH1— Filter Choke.
CH2— Speaker Field.
R1 — Filament voltage Dropping Resistor.
V1 — ,, of 25Z5 valve.
V2 — ,, ,, 43 ,,
V3 — ,, ,, 6D6 ,,
V4 — ,, ,, 6C6 ,,
V5 — 25Z5 Valve.

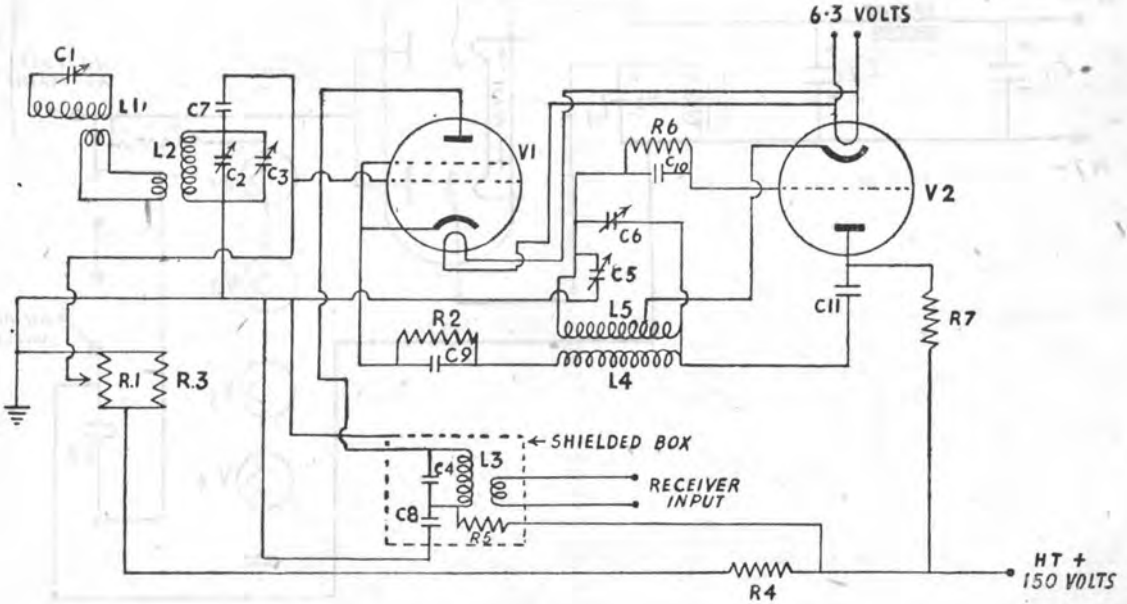
6·3 VOLTS
C1
L1
C7
L2
C2
C3
V1
R6
C10
V2
C6
C5
L5
C11
R7
R2
C9
L4
R.1
R.3
SHIELDED BOX
C4
L3
RECEIVER INPUT
C8
R5
R4
HT + 150 VOLTS

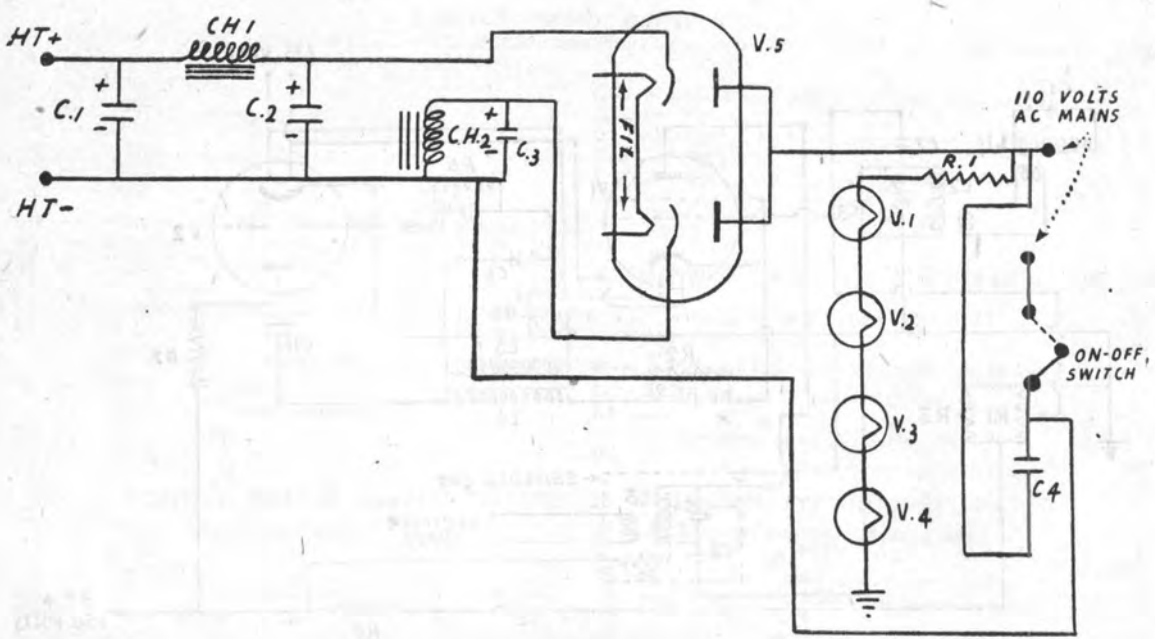
HT+
CH1
C.1
C.2
C.H.2
C.3
HT-
V.5
FIL
110 VOLTS
AC MAINS
R.1
V.1
V.2
V.3
V.4
ON-OFF,
SWITCH
C4

(18) MULTI-RANGE TEST METER FOR CHECKING. (Resistance, Milliamps, and A.C. and D.C. volts.)

SW1 — 3-pole, 2-throw Jack Switch.
SW2 — 2-pole, " " "
SW3 — 10-point Rotary Switch.
SW4 — Single-pole Centre-throw Switch.
SW5 — " " "
SW6 — " " "
SW7 — " " "

M — 0–1 Milliameter with Built-in Rectifier for use on A.C. or D.C. current (highest possible ohms per volt).
R1 — 1,000 ohm Wire Wound Precision Rheostat.
R2 — 5 ohm Precision Resistor acting as 10 ma. shunt for use with 50 m.v. meter. If other meters are used, substitute this Resistor for one of necessary value.
R3 — ½ ohm Precision Fixed Resistor acting as 100 ma. shunt.
R4 — .1 Fixed Resistor acting as 500 ma. shunt.
R5 — ½ megohm Precision Fixed Resistor.
R6 — ¼ " " " "
R7 — 150,000 ohm " " "
R8 — 50,000 " " " "
R9 — 40,000 " " " "
R10 — 5,000 " " " "
R11 — 4,000 ohm Precision Fixed Resistor
R12 — 950 " " " "
R13 — .05 " " " "
R14 — 1 megohm " " "
R15 — 3 " " " "

(10) NORMAL CIRCUIT OF AMERICAN TYPE T.R.F. MIDGET RADIO. (No Power Supply shown.)

C1 — .01 mfd. Condenser.
C2, C4 — .0003 Variable Condenser in ganged pair.
C3 — Trimming Condensers.
C5 — " "
C6 — .01 mfd. Condenser.
C7 — .05 " "
C8 — 8 " "
C9 — .01 " "
C10 — .05 " "
C11 — .01 " "
C12 — 8 " Electrolytic Condenser.
R1 — 15,000 ohm Volume Control.
R2 — 500,000 ohm Resistance ½ watt.
R3 — 1 megohm " ½ "
R4 — 25,000 ohm " ½ "
R5 — 550 ohm " ½ "
R6 — 500,000 ohm " ½ "
V1 — American Type 6D6 Valve.
V2 — " " 6D6 "
V3 — " " 43 "
CH1 — Speaker Voice Coil.
T1 — Output Transformer for Speaker.
A & B Aerial and H.F. Coils.

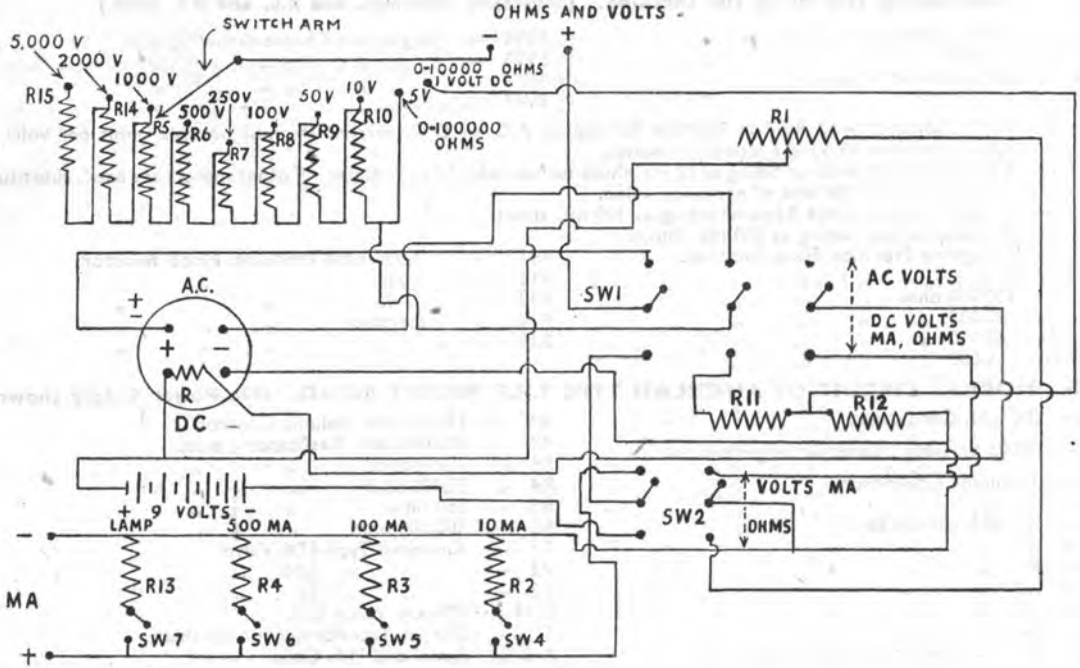
OHMS AND VOLTS
SWITCH ARM
5,000 V
2000 V
1000 V
250V
500 V
100V
50V
10V
5V
0-10000 OHMS
1 VOLT DC
0-100000
OHMS
R15
R14
R5
R6
R7
R8
R9
R10
R1
A.C.
R
DC
SW1
AC VOLTS
DC VOLTS
MA, OHMS
R11
R12
VOLTS MA
SW2
OHMS
9 VOLTS
LAMP
500 MA
100 MA
10 MA
MA
R13
R4
R3
R2
SW 7
SW 6
SW 5
SW 4

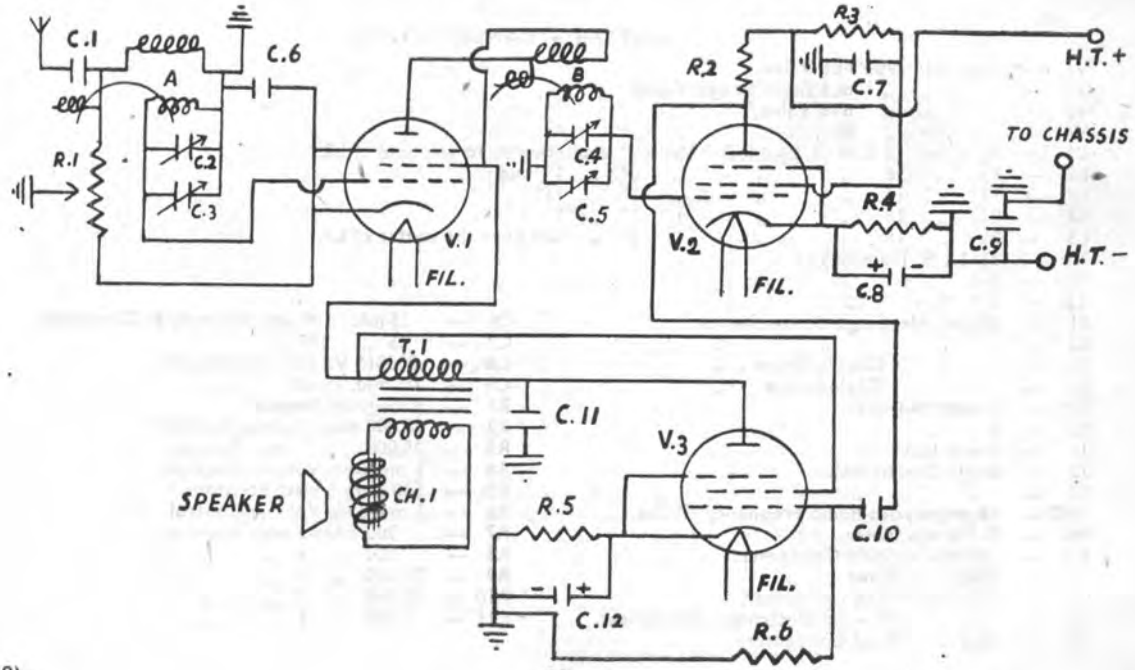
C.1
A
C.6
R.1
C.2
C.3
V.1
FIL.
B
C.4
C.5
R.2
R.3
C.7
H.T. +
TO CHASSIS
R.4
V.2
FIL.
C.8
C.9
H.T. −
T.1
C.11
V.3
SPEAKER
CH.1
R.5
C.10
FIL.
C.12
R.6

(10)

5-METER TRANSRECEIVER.

V1 — American type 6E6 Valve.
V2 — " " 6L6 Beam Power Valve.
V3 — " " 6V6 Valve.
V4 — " " 89 "
L1 — 4¼ turns, 16 S.W.G. Enamelled Wire ½" dia., coupled to grid end of L2.
L2 — 8½ " 16 " " " ½" " 1" long.
L3 — 13 " 16 " " " ½" " 1¼" "
L4 — 8½ " 16 " " " ½" " 1" "
L5 — 2½ " 16 " " " ¾" " laid over the centre of L4.
T1 — 3½–1 L.F. Transformer.
T2 — 4–1 " "
T3 — 2–1 " "
S1 — Single-pole, Single-throw Switch.
S2 — " " "
S4 — " Double-throw "
S5 — " Single-throw "
B1 — 6 volt Pilot Bulb.
B2 — 6 " " "
J1 — 3-way Jack.
J2 — Single Circuit Jack.
J3 — " " "
RFC — 56 megacycles Radio Frequency Choke.
M1 — 0–100 ma. Meter.
C1 — .000015 Variable Condenser.
C2 — .0005 mfd. Fixed "
C3 — .002 mfd. Fixed Condenser.
C4 — 25 " 100 volts Electrolytic Condenser.
C5 — .005 " Fixed Condenser.
C6 — 25 mfd. 100 volt Electrolytic Condenser.
C7 — .5 " 500 " " "
C8 — .000015 Variable Condenser.
C9 — .01 mfd. Fixed "
R1 — 4 megohm Resistor.
R2 — 50,000 ohm Volume Control.
R3 — 25,000 " 1 watt Resistor.
R4 — ½ megohm Volume Control.
R5 — 500 ohm 5 watt Resistor.
R6 — ½ megohm Volume Control.
R7 — 200 ohm 5 watt Resistor.
R8 — 100 " 5 " "
R9 — 25,000 " 5 " "
R10 — 25,000 " 5 " "
R11 — 2,500 " 2 " "

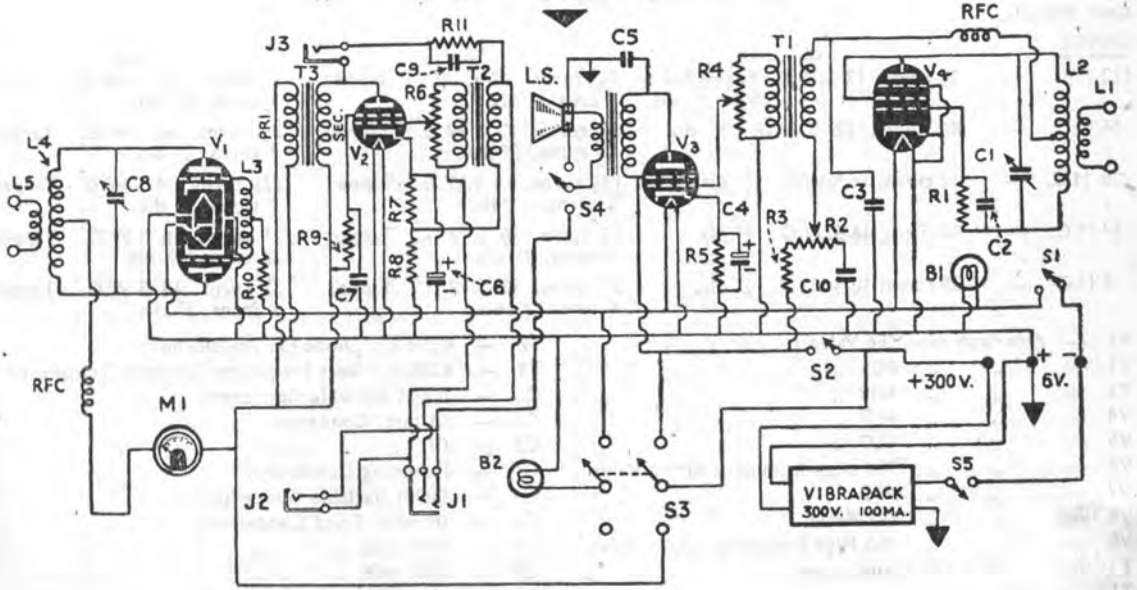
J3
R11
C5
RFC
T3
C9
T2
L.S.
R4
T1
V4
L2
L1
R6
PRI
SEC.
V1
V2
V3
L4
L5
C8
L3
R9
R7
R8
C7
C6
S4
C4
R3
R2
C3
R1
C1
C2
R5
C10
B1
S1
R10
RFC
M1
S2
+300V.
6V.
B2
J2
J1
S3
S5
VIBRAPACK
300V. 100MA.

THREE SHORT-WAVE BAND SUPERHETRODYNE FOR RECEPTION FROM 112 MEGACYCLESTO 7 MEGACYCLES.

Coil Details.

RANGE.	L.	L1.	L2.
112 M.C. —	2¼ turns, 12 S.W.G. Enamelled Wire ⅝" dia.	2¼ turns, 12 S.W.G. Tapped ½ turn ⅝" dia.	7 turns, 12 S.W.G. Tapped 3 turns, ⅝" dia.
56 M.C. —	8½ turns, 12 S.W.G. ⅝" dia.	8½ turns, 12 S.W.G. Tapped 1½ turns, ⅝" dia.	8½ turns, 12 S.W.G. Tapped 3 turns, ⅝" dia.
28 M.C. —	11 turns, 14 S.W.G. ¾" dia.	13½ turns, 14 S.W.G. Tapped 2 turns, ¾" dia.	12½ turns, 14 S.W.G. Tapped 3 turns, ¾" dia.
14 M.C. —	20 turns, 16 S.W.G. ¾" dia.	22 turns, 16 S.W.G. Tapped 3 turns, ¾" dia.	21 turns, 16 S.W.G. Tapped 3½ turns, ¾" dia.
7 M.C. —	35 turns, 18 S.W.G. ¾" dia.	33 turns, 18 S.W.G. Tapped 4 turns, ¾" dia.	32 turns, 18 S.W.G. Tapped 5 turns, ¾" dia.

V1 — American type 6F6 Valve.
V2 — " " 6C5 "
V3 — " " 6H6 "
V4 — " " 6U7 "
V5 — " " 6U7 "
V6 — " " 954 High-frequency Acorn Valve.
V7 — " " 956 " " "
V8 — " " 6J7 Valve.
V9 — " " 955 High-frequency Acorn Valve.
T — 4,200 k.c. I.F. Transformer.
T1 — 4,200 " " "

T2 — 4,200 k.c. Diode I.F. Transformer.
T3 — 4,200 k.c. Beat Frequency Oscillator Transformer.
C. — .00001 Variable Condenser.
C1 — .01 mfd. Condenser.
C2 — .01 " "
C3 — Trimming Condenser.
C4 — .00001 Variable Condenser.
C5 — .01 mfd. Fixed Condenser.
C6 — .0001 mfd. " "
C7 — .0001 mfd. " "
C8 — .00001 Variable Condenser.

Continued on next page

C9 — .1 mfd. Fixed Condenser.
C10 — .01 mfd. " "
C11 — .1 mfd. " "
C12 — .1 mfd. " "
C13 — .1 mfd. " "
C14 — .01 mfd. " "
C15 — .1 mfd. " "
C16 — .1 mfd. " "
C17 — .1 mfd. " "
C18 — .0001 mfd. Fixed Condenser.
C19 — .0001 mfd. " "
C20 — .01 mfd. " "
C21 — .1 mfd. " "
C22 — 25 mfd. 100 volt Electrolytic Condenser.
C23 — 5 mfd. 100 volt Electrolytic Condenser.
C24 — .1 mfd. Fixed Condenser.
C25 — 5 mfd. 100 volt Electrolytic Condenser.
C26 — .1 mfd. Fixed Condenser.
R' — 200 ohm 1 watt Resistor.
R1 — 50 ohm 1 watt "
R2 — 100,000 ohm 1 watt Resistor.
R3 — 1,500 ohm 1 watt "
R4 — 50 ohm 1 watt Resistor.
R5 — 50,000 ohm Volume Control.
R6 — 100,000 ohm 1 watt Resistor.
R7 — 30,000 ohm 1 " "
R8 — 2,500 ohm 1 " "
R9 — ½ megohm 1 " "
R10 — 300 ohm 1 " "
R11 — 50 ohm 1 " "
R12 — 100,000 ohm 1 " "
R13 — 2,500 ohm 1 " "
R14 — ½ megohm 1 watt Resistor.
R15 — 300 ohm 1 " "
R16 — 50 ohm 1 " "
R17 — 100,000 ohm 1 " "
R18 — 2,500 ohm 1 " "
R19 — 50 ohm 1 " "
R20 — 4 megohm 1 " "
R21 — 1 megohm 1 " "
R22 — 5 megohm 1 " "
R23 — 3,000 ohm 1 " "
R24 — ½ megohm 1 " "
R25 — ½ megohm Volume Control.
R26 — ½ megohm 1 watt Resistor.
R27 — 500 ohm 10 watt "
R28 — 10,000 ohm Volume Control.
R29 — 500 ohm 10 watt Resistor.
R30 — 25,000 ohm Volume Control.
R31 — 50,000 ohm 2 watt Resistor.
R32 — 1,000 ohm Volume Control.
R33 — 1,000 ohm 1 watt Resistor.
R34 — 500 ohm 1 watt "
R35 — 100,000 ohm 1 watt Resistor.
R36 — 100,000 ohm 1 " "
R37 — 100,000 ohm 1 " "
R38 — 50 ohm 1 " "
SW — 2-pole, 3-throw Switch.
SW1 — 3-pole, " "
T4 — Speaker Output Transformer (to suit Speaker).
J — Single Circuit Output Jack.
J1 — " " "
M — Volume Level Meter.
RFC1 Radio Frequency Choke.

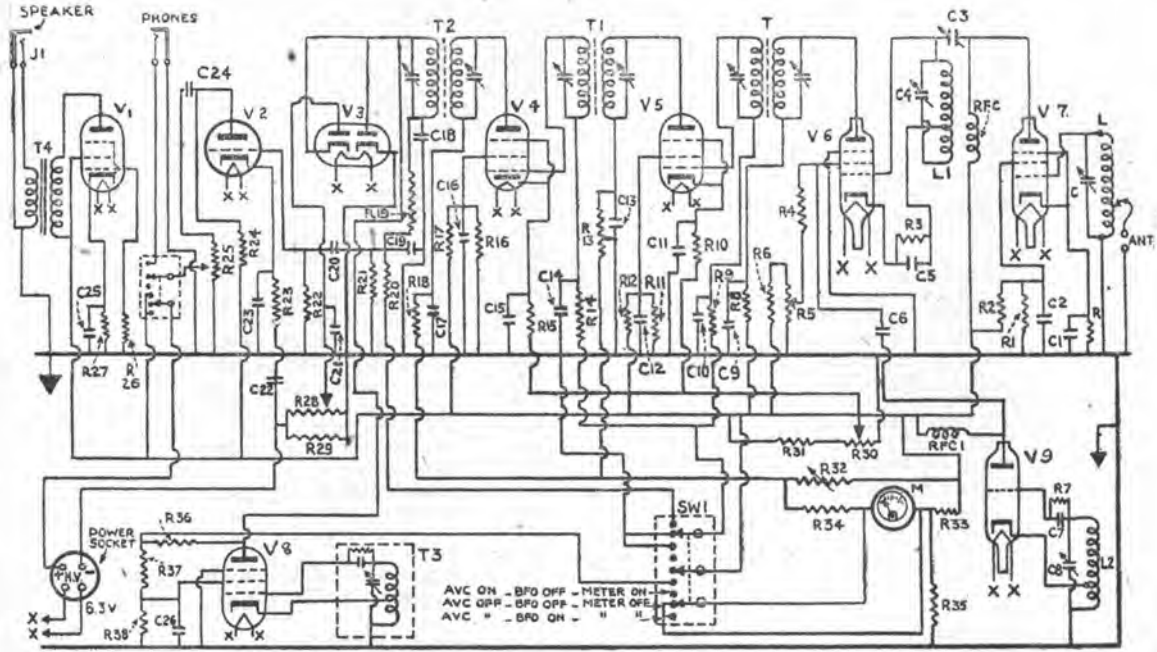
SPEAKER
PHONES
J1
T4
V1
C24
V2
V3
T2
C18
V4
T1
V5
T
C3
C4
RFC
V6
V7
L
C
ANT
C25
R27
R26
R25
R24
R23
R22
C23
C22
C20
C21
R21
R20
R19
C19
R18
C17
C16
R17
R16
C15
C14
R15
R14
R13
C13
R12
R11
C11
R10
R9
R8
C10
C9
C12
R6
R5
R4
R3
C5
C6
R2
R1
C2
C1
R
R28
R29
R31
R30
RFC1
R32
R34
R33
M
SW1
V9
R7
C7
C8
L2
R35
POWER SOCKET
H.V.
6.3V
R36
R37
R38
C26
V8
T3
AVC ON - BFO OFF - METER ON
AVC OFF - BFO OFF - METER OFF
AVC " - BFO ON - " "

(21) 5-METRE RESISTANCE-COUPLED SUPERHETRODYNE SPECIALLY DESIGNED FOR LONG-DISTANCE PHONE RECEPTION.

V1 — American type 6P5 Valve.
V2 — ,, ,, 6U7 ,,
V3 — ,, ,, 6U7 ,,
V4 — ,, ,, 6J7 ,,
L1 — 7 turns, 12 S.W.G. Enamelled Wire $\frac{5}{8}$" dia.
L2 — 10 ,, 10 S.W.G. ,, ,, $\frac{5}{8}$" dia.

NOTE.—Separate L1 and L2 on the same former by a distance of $\frac{3}{16}$ ths. of an inch

RFC — 80 turns, 32 S.W.G. d.s.c. wire $\frac{5}{16}$" dia.
C1 — .01 mfd. Fixed Condenser.
C2 — .1 mfd. ,, ,,
C3 — .0001 mfd. Fixed Condenser.
C4 — .0001 mfd. ,, ,,
C5 — .0001 mfd. ,, ,,
C6 — .1 mfd. ,, ,,
C7 — .0001 mfd. ,, ,,
C8 — 12 mfd. 100 volt Electrolytic Condenser.
C9 — .0001 mfd. Fixed Condenser.
C10 — .00001 Variable Condenser.
C11 — .01 mfd. Fixed Condenser.
C12 — .1 mfd. ,, ,,

R1 — $\frac{1}{4}$ megohm 1 watt Resistor.
R2 — 50,000 ohm 1 watt ,,
R3 — $\frac{1}{4}$ megohm 1 watt ,,
R4 — 50,000 ohm 1 watt Resistor.
R5 — $\frac{1}{4}$ megohm 1 watt ,,
R6 — 20,000 ohm 1 watt ,,
R7 — 1 megohm 1 watt ,,
R8 — $\frac{1}{2}$ megohm Volume Control.
R9 — 350 ohm 1 watt Resistor.
R10 — 10,000 ohm Volume Control.

(5) ELECTRONIC TYPE INPUT TONE CONTROL FOR P.A. EQUIPMENT.

R1 — 400,000 ohm resistor.
R2 — 325,000 ohm ,,
R3 — 500,000 ohm Variable Resistor for Bass Control.
R4 — 500,000 ohm ,, ,, ,, Alto ,,

C1 — .1 mfd. Fixed Condenser.
C2 — .01 mfd. ,, ,,
C3 — .0005 mfd. ,, ,,

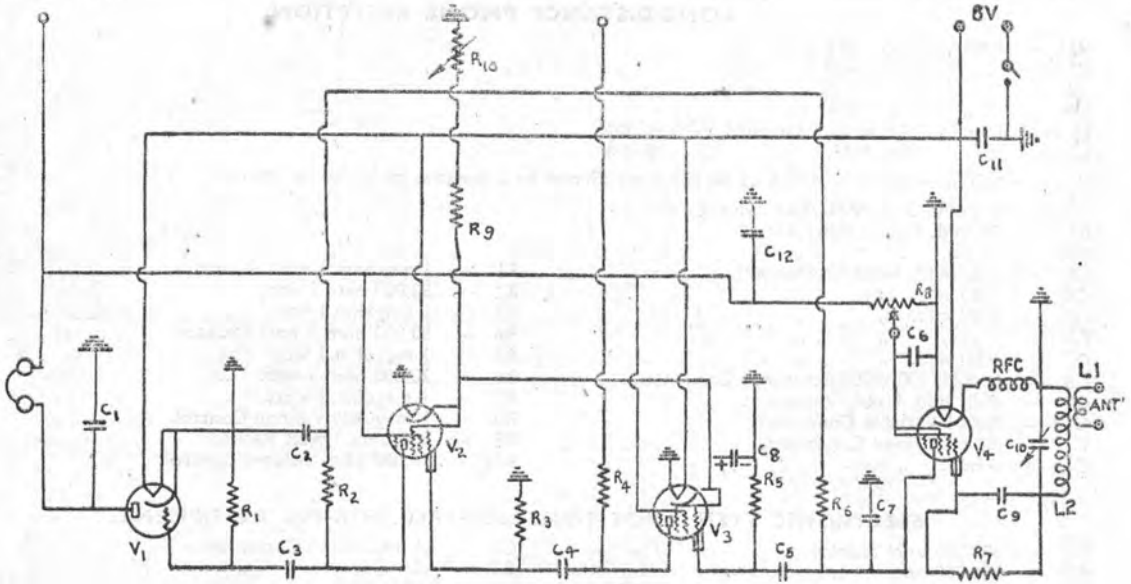
+50 V. HT.
+50 V. HT.
8V
R10
R9
C11
C12
R8
C6
RFC
L1
ANT
C1
C2
V2
R2
R1
V1
C3
R3
R4
C4
V3
C8
R5
C5
R6
C7
V4
C10
C9
L2
R7

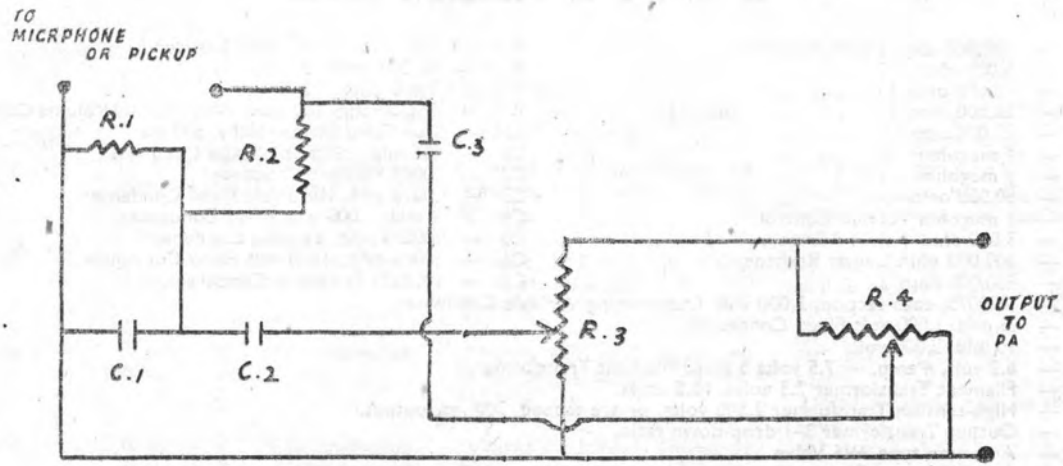
TO
MICRPHONE
OR PICKUP
R.1
R.2
C.3
R.3
R.4
OUTPUT
TO
PA
C.1
C.2

50 WATTS OUTPUT GRID MODULATED TRANSMITTER FOR 28, 14, 7 & 3.5 MEGACYCLE BANDS.

R1 — 100,000 ohm 2 watt Resistor.
R2 — 5,000 ohm 2 ,, ,,
R3 — 10,000 ohm 15 ,, ,,
R4 — 25,000 ohm 75 ,, ,, (tapped).
R5 — 25,000 ohm 2 ,, ,,
R6 — 1 megohm 2 ,, ,,
R7 — ¼ megohm 2 ,, ,,
R8 — 50,000 ohm 2 ,, ,,
R9 — 1 megohm Volume Control.
R10 — 3,000 ohm 1 watt Resistor.
R11 — 100,000 ohm 2 watt Resistor.
R12 — 450,000 ohm 2 ,, ,,
R13 — 650 ohm 5 watt Resistor.
R14 — 50,000 ohm 2 ,, ,,
R15 — 5,000 ohm 2 ,, ,,
R16 — 75,000 ohm 100 watt Wire Wound Volume Control.
CH — Iron Core Choke, 15 hy. 500 ma.
C1 — .01 mfd. 1,000 volt Fixed Condenser.
C2 — .0003 Variable Condenser.
C3 — .0025 mfd. 1,500 volt Fixed Condenser.
C4 — 4 mfd. 1,000 volt Fixed Condenser.
C5 — .00005 mfd. Variable Condenser.
C6 — .0015 mfd., 1500 volt Fixed Condenser.
C7 — .000005 Trimming Condenser.
C8 — .000075, each section, 5,000 volt Transmitting Variable Condenser.
C9 — .5 mfd. 1,000 volt Fixed Condenser.
C10 — 10 mfd. 2,000 volt ,, ,,
T1 — 6.3 volt, 4 amp. + 7.5 volts 5 amp. Filament Transformer.
T2 — Filament Transformer 2.5 volts, 12.5 amps.
T3 — High-tension Transformer 2,500 volts, centre tapped, 300 ma. output.
T4 — Output Transformer 3–1 drop-down ratio.
V1 — American type 6V6 Valve.
V2 — ,, ,, 76 ,,
V3 — ,, ,, 77 ,,
V4 — ,, ,, T40 Transmitting Triode.
V5 — ,, ,, T40 ,, ,,
V6 — British type KT66 Beam Power Output Valve.
V7 — Mercury Vapour type ½-wave Rectifier, filament current 2.5 amps. delivering output voltage of 15,000 volts at 300 ma.

V8 — Mercury Vapour type ½-wave Rectifier, filament current 2.5 amps. delivering output voltage of 15,000 volts at 300 ma.
J1 — Single Circuit Jack.
J2 — " " "
J3 — Jack for Crystal Microphone.
J4 — Single Circuit Jack.

DETAILS OF COILS.

Meter Range.	Oscillator Plate.	Final Plate.	Oscillator Grid.
10 —	1½ turns, 18 S.W.G. Enamelled Wire, 1⅜" dia. 1½" long.	4¼ turns, 8 S.W.G. Enamelled Wire, 2½" dia. centre tapped, 3½" long.	5½ turns, 22 S.W.G. d.s.c. centre tapped 1⅜" dia. close wound at lower end oscillator plate coil.
20 —	11 turns, 16 S.W.G. Enamelled Wire, 1⅜" dia. 1½" long.	11 turns, 12 S.W.G. Enamelled Wire, centre tapped, 2½" dia. 4½" long.	9½ turns, 22 S.W.G. d.s.c centre tapped, 1¼" dia. close wound at lower end oscillator plate coil.
40 —	19 turns, 20 S.W.G. Enamelled Wire, 1¼" dia. 1½" long.	22 turns, 12 S.W.G. Enamelled Wire, centre tapped, 2½" dia. 4½" long.	19 turns, 24 S.W.G. d.s.c. centre tapped, 1¼" dia. close wound at lower end oscillator plate coil.
80 —	33 turns, 20 S.W.G. Enamelled Wire, 1¼" dia. wound turn to turn.	35 turns, 12 S.W.G. Enamelled Wire, centre tapped, 2½" dia. 4" long.	37½ turns, 24 S.W.G. s.d.c. centre tapped, 1¼" dia. close wound at lower end oscillator plate coil.
160 —	72 turns, 24 S.W.G. Enamelled Wire, 1¼" dia. close wound.	72 turns, 18 S.W.G. Enamelled Wire, centre tapped, 2½" dia. 4½" long.	71 turns, 30 S.W.G. Enamelled Wire centre tapped, 1¼" dia. close wound at lower end oscillator plate coil.

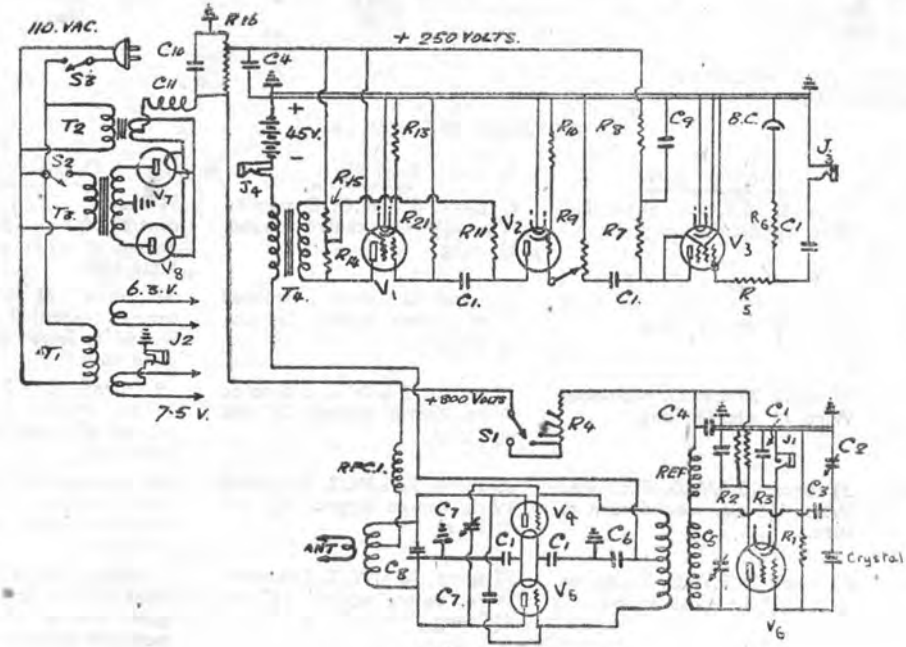
110. VAC.
R16
C10
C11
C4
+ 250 VOLTS.
S3
T2
S2
T3.
V7
V8
+
45V.
-
J4
T4.
R13
R15
R14
R21
V1
R11
C1.
R10
V2
R9
R8
R7
C1.
C9
B.C.
J3
R6
C1
V3
R5
6.3.V.
J2
T1
7.5 V.
+800 Volts
S1
R4
R.F.C.1.
C4
C1
J1
C2
REF
R2
R3
C3
C7
V4
C1
C1
C6
ANT.
C8
C7.
V5
C5
R1
Crystal
V6

D.C. MULTI-RANGE TESTER. Slide contact set at

A. 0 TO 1,000 VOLTS. D.C.
B. 0 TO 250 VOLTS. D.C.
C. 0 TO 100 VOLTS. D.C.
D. 0 TO 25 VOLTS D.C.
E. 0 TO 5 VOLTS D.C.
F. 0 TO 100,000 OHMS
G. 0 TO 1 MILLIAMPERE

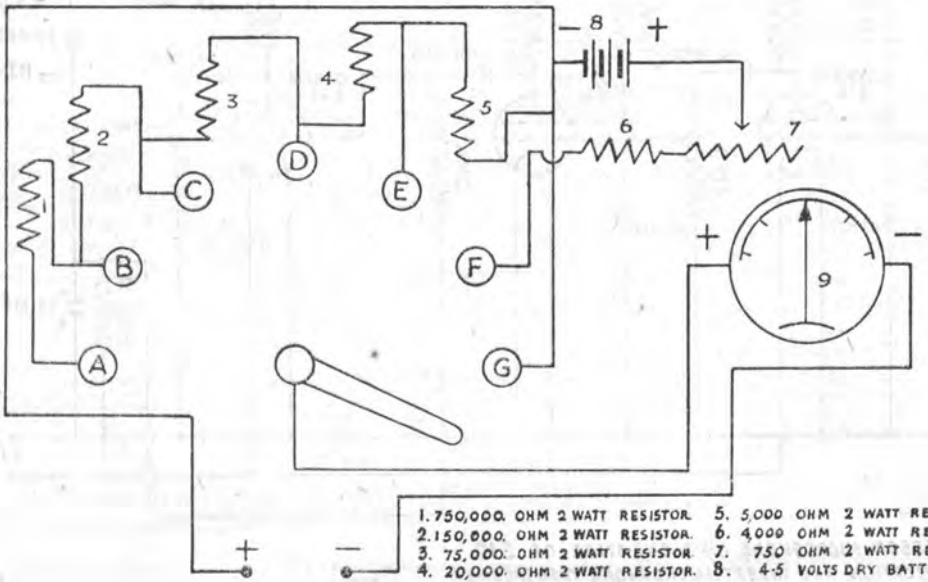

1. 750,000 OHM 2 WATT RESISTOR.
2. 150,000 OHM 2 WATT RESISTOR.
3. 75,000 OHM 2 WATT RESISTOR.
4. 20,000 OHM 2 WATT RESISTOR.
5. 5,000 OHM 2 WATT RESISTOR
6. 4,000 OHM 2 WATT RESISTOR
7. 750 OHM 2 WATT RESISTOR
8. 4·5 VOLTS DRY BATTERY

9. 0 TO 1 D.C. MILLIAMMETER

DEAF AID AMPLIFIER CIRCUIT BY COURTESY OF OSRAM VALVES

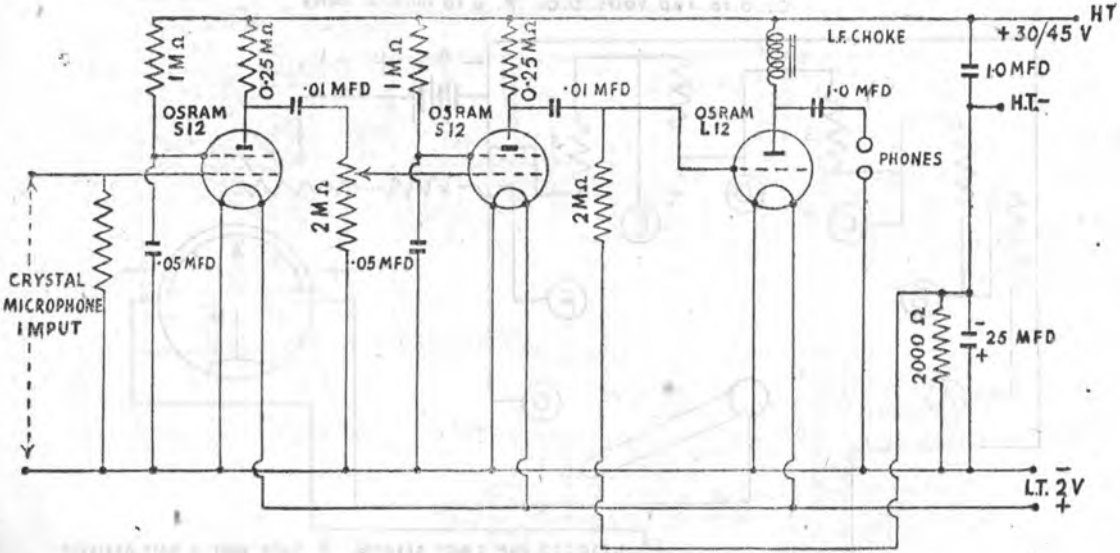

FOR CARBON MICROPHONE, OMIT ONE STAGE OF S12 AMPLIFICATION, AND INSERT MICROPHONE TRANSFORMER

THEORETICAL RADIO SYMBOLS

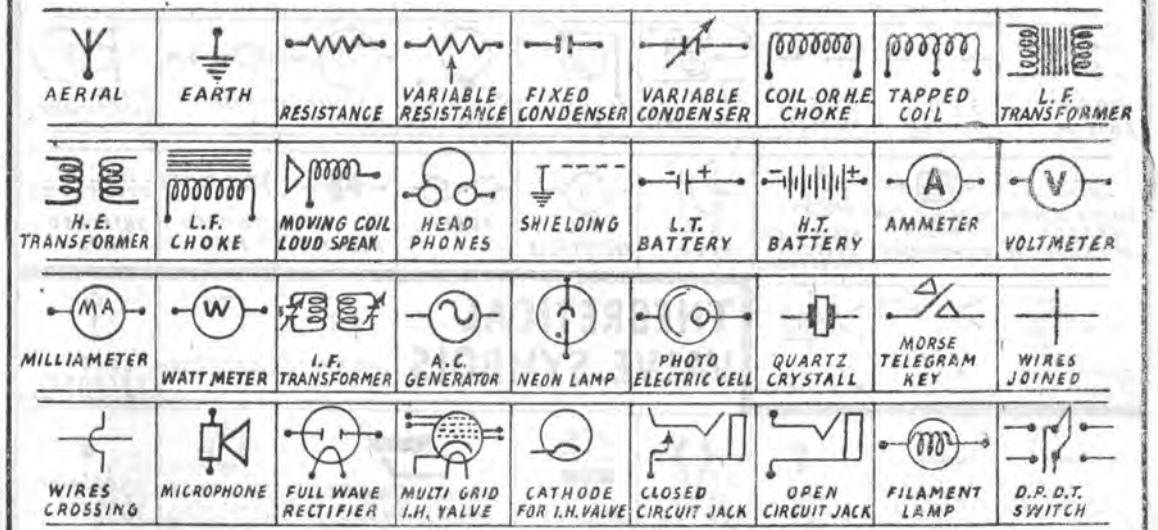

THEORETICAL RADIO SYMBOLS

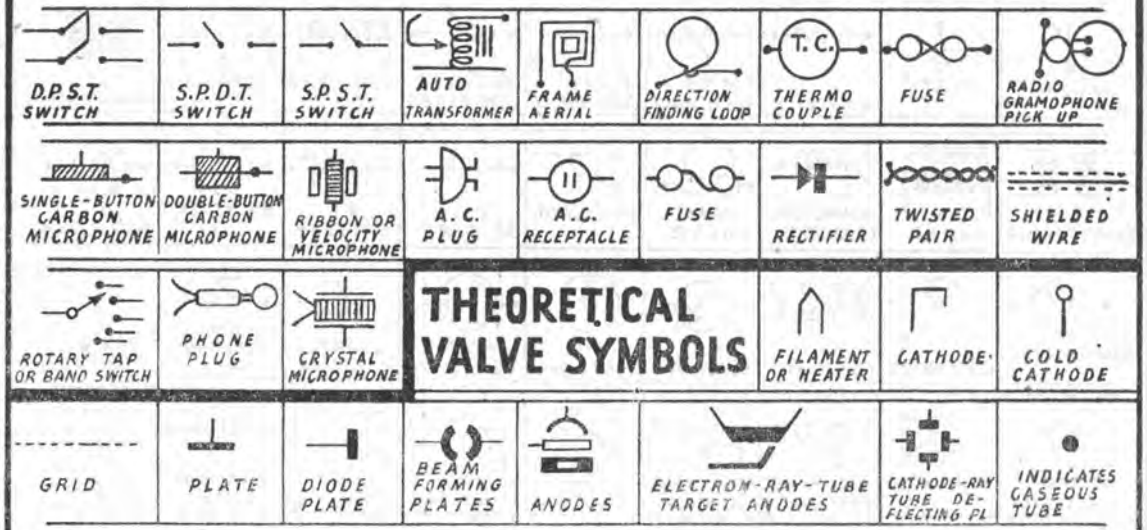

OHMS LAW

Amperes = Volts ÷ Resistance
" = Watts ÷ Volts
" = √Watts ÷ Resistance

Volts = Resistance X Amperes
" = Watts ÷ Amperes
" = √Watts X Resistance

Watts = (Amperes)² x Resistance
" = (Volts)² ÷ Resistance
" = Amperes X Volts

Resistance = Volts ÷ Amperes
" = (Volts)² ÷ Watts
" = Watts ÷ (Amperes)²

RESISTANCES IN PARALLEL

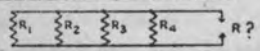

$$R = \frac{1}{\frac{1}{R_1} + \frac{1}{R_2} + \frac{1}{R_3} + \frac{1}{R_4} + \text{ETC.}}$$

2 Parallel Resistances $R = (R_1 \times R_2) \div (R_1 + R_2)$

3 Parallel Resistances

$$R = \frac{R_1 \times R_2 \times R_3}{(R_1 \times R_2) + (R_2 \times R_3) + (R_3 \times R_1)}$$

4 Parallel Resistances

$$R = \frac{R_1 \times R_2 \times R_3 \times R_4}{(R_1 \times R_2 \times R_3) + (R_2 \times R_3 \times R_4) + (R_3 \times R_4 \times R_1) + (R_4 \times R_1 \times R_2)}$$

RESISTANCES IN SERIES.

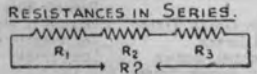

$$R = R_1 + R_2 + R_3 + \text{ETC.}$$

RESISTANCE IN SERIES-PARALLEL

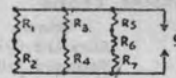

$$R = \frac{1}{\frac{1}{R_1+R_2} + \frac{1}{R_3+R_4} + \frac{1}{R_5+R_6+R_7}}$$

CONDENSERS IN PARALLEL

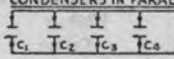

$$C = C_1 + C_2 + C_3 + C_4 + \text{ETC}$$

CONDENSERS IN SERIES

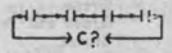

$$C = \frac{1}{\frac{1}{C_1} + \frac{1}{C_2} + \frac{1}{C_3} + \frac{1}{C_4} + \text{ETC.}}$$

CONDENSERS IN SERIES-PARALLEL

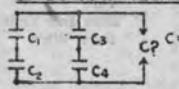

$$C = \frac{1}{\frac{1}{C_1} + \frac{1}{C_2}} + \frac{1}{\frac{1}{C_3} + \frac{1}{C_4}}$$

INDUCTANCES IN SERIES

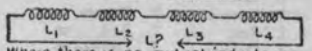

Where there is no mutual inductance

$$L = L_1 + L_2 + L_3 + L_4 + \text{ETC.}$$

INDUCTANCES IN PARALLEL

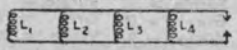

$$L = \frac{1}{\frac{1}{L_1} + \frac{1}{L_2} + \frac{1}{L_3} + \frac{1}{L_4} + \text{ETC.}}$$

MAINS TRANSFORMER LEADS.

Primary Value :	Colour :
10 volt tapping	Black and Green
210 volt "	Black and Yellow
230 volt "	Black and Red
250 volt "	Black and Brown
Zero tapping	Black .

Secondaries Value :	Colour :
High tension ends	Red
" " centre tap	Red and Yellow
Rectifier heater ends	Green
" centre tap	Green and Yellow
Valve heater ends	Brown
" " centre tap	Brown and Yellow
Additional L.T. winding ends	Blue
" " centre tap	Blue and Yellow
Earthing Lead	Bare Wire

FIXED CONDENSERS.

COLOUR CODE FOR CAPACITY IN mmf.

First Dot.	Second Dot.	Third Dot.
Black = 0	Black = 0	
Brown = 1	Brown = 1	Brown = 0
Red = 2	Red = 2	Red = 00
Orange = 3	Orange = 3	Orange = 000
Yellow = 4	Yellow = 4	Yellow = 0000
Green = 5	Green = 5	Green = 00000
Blue = 6	Blue = 6	Blue = 000000
Purple = 7	Purple = 7	Purple = 0000000
Grey = 8	Grey = 8	Grey = 00000000
White = 9	White = 9	White = 000000000

Example :—1st dot Green, 2nd dot Red, and 3rd dot Brown = 5200 mmf. capacity.

METER CONVERSIONS.

To Extend Range of a Milliammeter

Shunt resistance $R_S = \frac{R_M}{n-1}$

To Extend Range of a Voltmeter

Series resistance $R_T = R_M \times (n - 1)$

To use a Milliammeter as a Voltmeter

Series resistance $R_T = \frac{E}{I_M} - R_M$

Where n = factor by which it is desired to multiply the range of meter, R_M = resistance of meter, E = required voltage reading, and I_M = reading of current meter at full scale deflection.

BRITISH COLOUR CODE FOR BATTERY CORDS.

Colour.	*Purpose.*
Red	Highest Positive Voltage.
Maroon and Red	2nd Positive Voltage.
Maroon	3rd Positive Voltage.
Black with Red Tracer	Negative H.T.
Yellow	Positive L.T. Voltage.
Black with Yellow Tracer	Negative L.T. Voltage.
Green	Positive Bias Voltage.
Black with Green Tracer	Maximum Negative Bias.
Black and Green	2nd Negative Bias.
High Potential, Brown	Loud-speaker Connections.
Black with Brown Tracer	

BRITISH COLOUR CODES.

RESISTANCES.

The colour of the body represents the first figure of the resistance value, and the colour of the tip or end band the second figure. The colour of the spot on the centre band denotes the number of cyphers that follow the first two figures.

Colour	Figure	Colour	Figure
Black ...	0	Green ...	5
Brown ...	1	Blue ...	6
Red ...	2	Violet ...	7
Orange ...	3	Grey ...	8
Yellow ...	4	White ...	9

Example :– Orange body, Violet Tip and Green spot = 3,700,000 ohms. resistance.

WANDER PLUGS.

Value :	Colour :
Highest + H.T.	Red
2nd highest + H.T.	Yellow
3rd highest + H.T.	Green
4th highest + H.T.	Blue
L.T. Positive	Pink
Negative (L.T.–, H.T.–, G.B.+)	Black
Highest G.B. –	Brown
2nd highest G.B. –	Grey
3rd highest G.B. –	White

Any additional battery lead is Violet, and any centre tap is White.

FUSES.

Value :	Colour :	Value :	Colour :
60mA	Black	1 Amp	Dark Blue
100mA	Grey	1.5 Amp	Light Blue
150mA	Red	2 Amp	Purple
250mA	Brown	3 Amp	White
500mA	Yellow	5 Amp	Black & White
750mA	Green		

FIXED CONDENSER LEADS.

Value :	Colour :
Highest Capacity +	Red
2nd highest Capacity +	Yellow
3rd " " +	Green
4th " " +	Blue
5th " " +	Violet
Principal Negative Lead	Black
2nd Negative "	Brown
3rd " "	Grey
Centre lead of Voltage doubler Condensers	White

When 2 capacities are of the same value, the one of the higher voltage rating has the higher colour in the table.

Common Positive junctions are marked +
" Negative " " " –
Series connections are marked ±
Unconnected sections are marked &

Examples :–

8 + 8 = Two 8uF condensers with common positive lead
8 – 8 = " " " " " negative lead
8 ± 8 = A series voltage doubler connection
8 & 8 = Two isolated 8 u F condensers.

U.S.A. COLOUR CODE FOR

A.F. Transformers :

Blue — plate (finish) lead of primary.

Red — B + lead (this applies whether the primary is plain or centre-tapped).

Brown — plate (start) lead on centre-tapped primaries. (Blue may be used for this lead if polarity is not important).

Green — grid (finish) lead to secondary.

Black — grid return (this applies whether the secondary is plain or centre-tapped).

Yellow — grid (start) lead on centre-tapped secondaries. (Green may be used for this lead if polarity is not important).

NOTE :—These markings apply also to line-to-grid, and tube-to-line transformers.

Loudspeaker Voice Coils :

Green — finish.

Black — start.

Field Coils :

Black and Red — start.

Yellow and Red — finish.

Slate and Red — tap (if any).

Power Transformers :

1. Primary Leads.....*Black*
   If tapped :
   Common.....*Black*
   Tap.....*Black and Yellow Striped*
   Finish.....*Black and Red Striped*
2. High-Voltage Plate Winding.....*Red*
   Centre-Tap.....*Red and Yellow Striped*
3. Rectifier Fil. Winding.....*Yellow*
   Centre-Tap.....*Yellow and Blue Striped*
4. Fil. Winding No. 1.....*Green*
   Centre-Tap.....*Green and Yellow Striped*
5. Fil. Winding No. 2.....*Brown*
   Centre-Tap.....*Brown and Yellow Striped*
6. Fil. Winding No. 3.....*Slate*
   Centre-Tap.....*Slate and Yellow Striped*

BRITISH MOVING COIL SPEAKER. COLOUR CODE.

Colour.	*Purpose.*	
Green (outer end)	Output Transformer—	Primary ends of winding.
Brown (inner end)	" "	Primary ends of winding.
Red	" "	Primary centre tap.
Maroon	" "	Secondary end—inside.
White	" "	outside.
Yellow	Field Winding—	Outside end.
Black		Inside end.

U.S.A. COLOUR CODE FOR RADIO COMPONENTS.

Condenser voltage ratings are indicated by a supplementary dot or band as follows :—

Brown	100 volts	Violet	700 volts
Red	200 volts	Grey	800 volts
Orange	300 volts	White	900 volts
Yellow	400 volts	Gold	1000 volts
Green	500 volts	Silver	2000 volts
Blue	600 volts	None	500 volts

In some instances condensers are identified by a second (lower) row of three dots or a series of three narrow colour bands to the right of the wide capacitance bands. In these cases the first colour of the second row or series indicates the number of ciphers following the capacitance digits, the second colour indicates tolerance and the third voltage rating.

I.F. Transformers :

Blue — plate lead.

Red — B + lead.

Green — grid (or diode) lead.

Black — grid (or diode) return.

NOTE :—If the secondary of the I.f.t. is centre-tapped, the second diode plate lead is green-and-black striped, and black is used for the centre-tap lead.

Resistors and Condensers :

An auxiliary colour code has been established covering the *tolerances* of resistors and condensers and the *voltage ratings* of condensers. Tolerances are indicated by the following colours, which appear as a fourth dot or band :—

Brown	1%	Violet	7%
Red	2%	Grey	8%
Orange	3%	White	9%
Yellow	4%	Gold	5%*
Green	5%	Silver	10%*
Blue	6%	None	20%*

*Commonly used on resistors.

BERNARDS' TECHNICAL BOOKS.

No. 1	Amalgamated Engineering Ref. Tables ...	1/-
„ 2	"Little Marvel" Vegetable Ref. Book ...	1/-
„ 3	Services Signalling Manual	1/-
„ 4	Radio Manual	1/-
„ 5	Elements of Mathematics	1/-
„ 6	Electrical Engineers Handbook	1/-
„ 7	Manual of Metals and Alloys	1/-
„ 8	Manual of Modern Automatic Guns ...	1/-
„ 9	Manual of Photography	1/-
„ 10	Manual of Mathematical Tables	1/-
„ 11	Manual of Cycle Maintenance aud Hints ...	1/-
„ 12	Manual of Commando and Guerilla Tactics: Unarmed Combat	1/-
„ 13	Manual of Commando and Guerilla Tactics: House to House Fighting	1/-
„ 14	Manual of Small Arms and Special Weapons	1/-
„ 15	Manual of Wartime Household Repairs, usual series	1/-
„ 16	Illustrated Engineering Practice Machine tools and productive processes	2/-
„ 17	Manual of Rifles, usual series	1/-
„ 18	Weapons and Armaments of the Modern German Army	2/-
„ 19	Manual of Map and Compass Reading ...	2/-
No. 20	Manual of Gliding and Motorless Flight ...	2/-
„ 21	Manual of Science. Covering Mechanics, Statics, Physics, etc.	2/-
„ 22	Manual of Radio Circuits. How to build your own receivers and transmitters ..	2/-
„ 23	Manual of Hand Grenades, Mines and Bombs	2/-
„ 24	Uniform, Rank Badges and Intelligence Data on the Modern German Armed Forces	2/-
„ 25	Strategy and Tactics of the Modern German Army	2/-
„ 26	Tanks at War—Friend or Foe? How to recognize them	2/-
„ 28	Income Tax for the Working Man ...	1/-
„ 30	Manual of Radio Valves, British and American with Characteristics and Data equivalents and alternatives	3/6
„ 31	Explosives.—Nature, variety and uses as Projectile Fillings, Propellents, Mines, Demolition Charges, etc., etc.	2/-

BERNARDS' FICTION SERIES.

No. 27	Fighter Controller by S/L J.D.V. Holmes, R.A.F.V.R A tale of the R.A.F. based on Fact	2 -
No. 29	Did this Really Happen? by S. Gainsley Short Stories at their best ...	1/6

T. KEELEY & CO. Ltd. Printers, Belsham Street, London, E.9.