103 simple transistor projects

Tom Kneitel

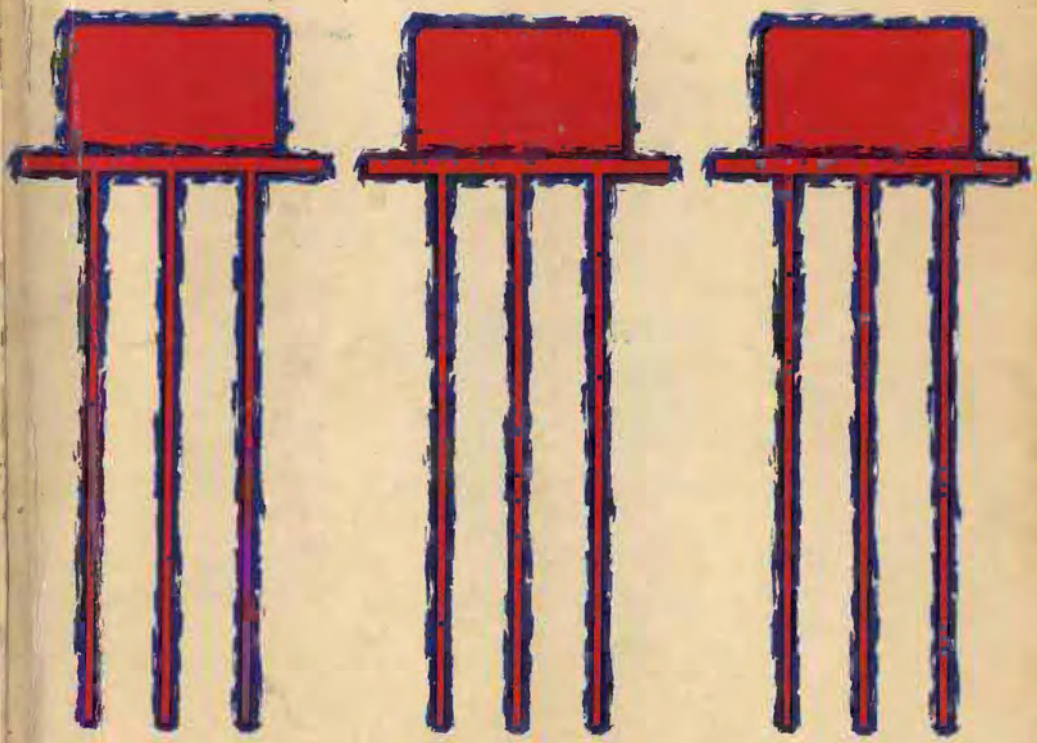

HAYDEN

103 simple transistor projects

Thomas S. Kneitel
K3FLL/WB2AAI

HAYDEN BOOK COMPANY, INC.
Rochelle Park, New Jersey

JOHN F. RIDER PUBLISHER, INC.

Library of Congress Catalog Card Number 64-18406

Printed in the United States of America

12 13 14 15 16 17 18 PRINTING

73 74 75 76 77 78 YEAR

Introduction

Many electronics buffs have hoped that someone would write what might be considered a "cookbook of transistor circuits"—a master workbook of "umptey nine" handy, uncomplicated circuits as a reference guide around the ham shack, in the house, in conjunction with CB'ing, hi-fi'ing, and general experimenting.

Alas, no such volume seemed to be available. Nevertheless, I was writing such a book myself—*unknowingly!* Every time I was in need for some transistorized gadget, I would get some construction ideas, assemble the device, and file the plans for future reference. It soon dawned upon me that the "future reference" file was the very thing that we had all been seeking—the transistor circuit cookbook!

So here it is, a copious serving, a potpourri, of relatively inexpensive, easy-to-construct, handy transistor devices covering all field of electronics from ham and CB to fallout shelter devices; from novelties to utilities—none with more than 3 or 4 transistors.

To make room for all of these circuits, I decided that the "cookbook" approach need *not* consist of the usual involved explanations of the finer points of circuit theory for the described devices, with detailed kit-type instructions (such as, "solder the lead of the capacitor to the base lead of the transistor, next solder the resistor . . ."), and these will be conspicuous by their absence.

If you have worked with transistors before, you won't miss the super-detailed instructions. If you have not worked with semiconductors, read on!

Transistors generate very little heat so they can be placed almost anywhere in the circuit. For this reason we have not included parts layout sketches—just wire the circuits together where the parts fit, but keep all leads as short as possible.

The only critical transistor placement involves power transistors. These are usually in the form of a diamond shaped pancake, generating considerable heat. For this reason, they should be mounted on a "heat sink"—a large sheet of metal, like a metal chassis. Of course, the transistor with the heat sink must be *electrically* insulated from this metal plate since one of its electrodes is usually connected directly to the metal case. This insulation is available in power transistor mounting kits.

Heat is the real enemy of the transistor. If you solder connections to the transistor's leads, be sure that you keep the heat from running back up the lead and possibly damaging the transistor. Usually it is recommended that you hold the lead firmly with long-nosed pliers while soldering. Obviously they have never attempted to hold the pliers in one hand, the solder in the

other, the transistor in place with the third hand, and the soldering iron itself in the fourth!

A handy little gadget, sold by many parts stores, looks like a pair of "backward" tweezers with a triangular block of metal inside each jaw. They open when squeezed and tighten back when released. Simply snap this onto the transistor lead to take up all excess heat. If you can't locate this device, an ordinary alligator clip (larger sizes) with copper strips inside its jaws helps to remove the heat.

The problem of soldering transistor leads can be sidestepped by using sockets. Make the connections to the socket terminals and plug in the transistor after everything cools down. Do not put the transistor into the wrong socket, particularly if there are several different kinds in the circuit.

If you use sockets, a number of different kinds are available. All are good and you can use whatever kind you can get or whatever suits you best.

One tip when using sockets—the small holes fill up very rapidly with solder. Be careful not to let much solder flow onto the joint when soldering or you may find that the socket will not accept the transistor. There are not many ways of salvaging such a socket either.

Since transistors, again unlike tubes, come in two "polarities"—pnp and npn—you may have some trouble deciding how to connect the battery when the project is completed. Also, if you should accidently connect the battery the wrong way, the transistors will instantly blow up! They won't really explode, but they will be dead (usually).

To avoid the chance of this catastrophe, many experimenters wire a silicon rectifier diode into their circuits so that no current can flow the wrong way. Then, if the battery is hooked up in reverse, nothing happens.

An even better way of beating fate is to use 4 diodes, as shown in the schematic. With this you won't have to worry—no matter which way the

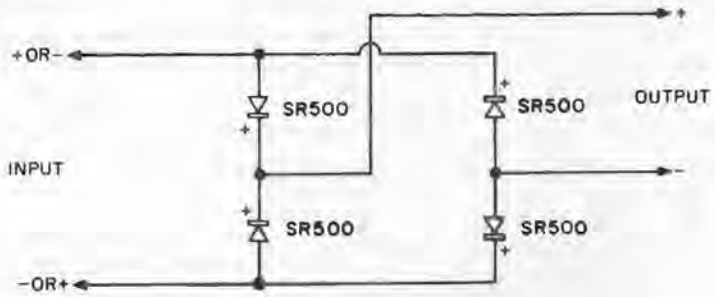

FIG. A

battery is connected the current will flow right through the circuit. We prefer Sylvania SR500 type diodes for this circuit.

Wherever possible, use the specific transistors suggested in our schematics. If you can't locate some of them don't be shocked; at last count there were something like 6200 different types in current manufacture. Many stores do not carry more than a basic supply of the most popular types. A list of standard substitutions for the transistors found in the book is found in the inside cover at the end of the book. These substitutions have not been tried in the circuits and some variance in circuit operation is possible and should be expected.

All of which brings us to the circuits themselves. Each schematic uses a standard format for listing parts values. Resistances are in ohms and unless otherwise indicated, all resistors are rated at ½-watt. Resistances marked "K" are in thousands of ohms and those marked "Meg" are in megohms.

Capacitor values are in microfarads, or in *picofarads* ("pf"). You may know a *picofarad* as a *micromicrofarad*; since the newer term is now the official one, it is used throughout this volume.

Electrolytic capacitors, which are used frequently in these circuits, also have a voltage rating, which is not indicated on the schematic in most cases. The voltage rating of the capacitor depends on the battery voltage; standard ratings are 3, 10, 15, 25, and 50 volts. Use the next higher rating than the battery indicated in the circuit; for instance, with a 9-volt battery use 10-volt capacitors, with a 12-volt battery, use 15-volt capacitors, etc.

If you're using an a-c power supply instead of a battery, insert a safety factor by going to the next higher rating than *double* your voltage; in the above examples, 25-volt capacitors would be used in either circuit. Of course, if your a-c supply has a regulated output, this safety factor is unnecessary and you can treat the supply just as if it were a battery.

Many of the local stores do not carry a complete line of transistor components. However, you can always obtain them by mail order. Most all of the mail order houses are happy to provide their catalogs free of charge, and it is suggested that you send for them as reference guides. Also, a few components may be more readily available directly from the factory outlet rather than through a mail order house. Most mail order houses and manufacturers that sell directly to the consumer advertise in many popular level electronic magazines.

Just one reminder: a number of radio transmitters are included in these circuits. No matter how little power you use, it's still illegal to put some of these on the air unless you hold a valid Amateur Radio Service license. If you want license-free operation, build the *Part 15* (of the FCC regulations) circuits, not the ham rigs!

There are many fine books available regarding transistor theory. Check

the *John F. Rider Publisher, Inc.* display at your local store for these.*

You will find that we have included with these circuits certain hints and tips which we felt would be of genuine value in construction, testing, and operation of these devices.

With the many thousands of transistor-inclined hams and experimenters who have been devising and tinkering with circuits for the past few years, variations of some of the circuits in this book may have appeared in electronics publications. We have added our own "spices" to make all of the circuits in this book suit our individual needs and there is not a circuit in the book to which you can't do the same, thereby multiplying the number of devices which can be constructed.

To aid those with specific interests, we have included a helpful letter code in the Table of Contents beside each transistor project. By reading each listing, you can determine if a project falls within one or more of the following interest areas: A Amateur; B CB'er; C SWL; D Audiophile; E Experimenter; F Photographer; and G DX'er.

The author wishes to dedicate this book to his wife, Judy, whose diligence kept the "future reference" file in a workable condition.

Happy transistorizing!

March, 1964
New York, N. Y.

THOMAS S. KNEITEL
K3FLL/WB2AAI

* *Basic Transistors, Semiconductors & Transistors,* by Alexander Schure, Ph.D. *Fundamentals of Transistors,* by Leonard Krugman, P.E. *Fundamentals of Transistor Physics,* by I. Gottlieb, P.E. *Principles of Transistor Circuits,* S. W. Amos, B.Sc.

Contents

Note: The following projects have been coded so as to designate the following interest areas: **A** Amateur; **B** CB'er; **C** SWL; **D** Audiophile; **E** Experimenter; **F** Photographer; and **G** DX'er.

1 Audio Amplifier/Oscillator

This device doubles as a code practice oscillator and as an audio amplifier.

J1 is a standard phono jack, the transformer is an *Argonne* AR-164, *Thordarson* TR-114, or *Stancor* TA-42. The speaker is a 6- to 8-ohm PM type, any size 6 in. to 8 in.

If you have no use for a code practice oscillator and wish to use this only

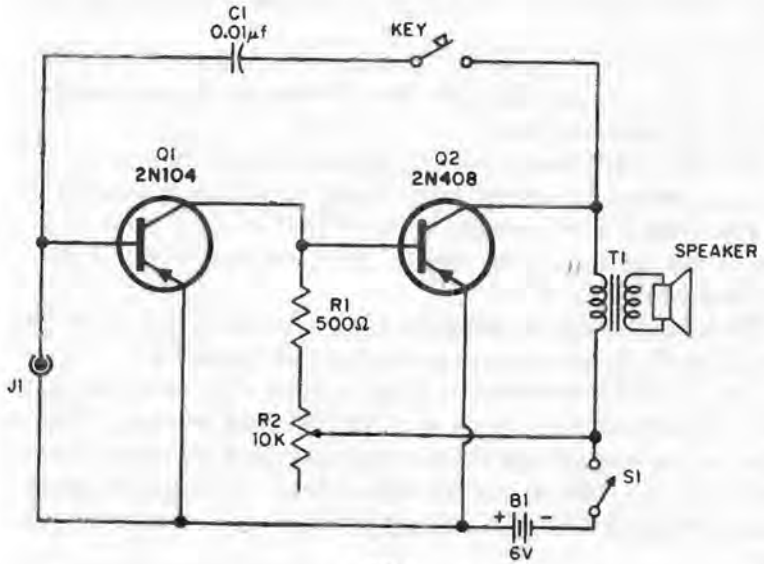

FIG. 1

as an audio amplifier, you can eliminate the connection which runs between the base of the 2N104 to the collector of the 2N408. This, of course, also eliminates the key and the capacitor.

The 10K potentiometer controls the volume.

PARTS LIST

Transistors	**Miscellaneous**
Q1—2N104	T1—Argonne AR-164, Thordarson TR-114, or Stancor TA-42
Q2—2N408	Speakers: 6-8 ohm PM
Resistors (ohms)	J1: Standard phono jack
R1—500	B1—6 volts
R2—10K pot.	S1—SPST
Capacitors (μf)	Key
C1—0.01	

2 Two-Meter Transmitter Hunt Beacon

This little unit has a power output of about 35 milliwatts in the 2-meter amateur band and may be constructed inconspicuously in a 1 in. by 3 in. by 5 in. box.

Coil L1 consists of 19 turns of No. 24 enameled wire wound on a 1-meg, 1-watt resistor.

Coil L2 is 9-1/2 turns of No. 24 enameled wire on 5/16-in. diameter slug-tuned printed-circuit form. Tap 3-3/4 turns and 2-1/2 turns from cold end.

Coil L3 is 6-1/2 turns of No. 24 enameled wire spaced about 1/16 in. on a 5/16-in. diameter slug-tuned form. Remove the slug and compress or spread for maximum output.

Coil L4 is 1-3/4 turns of No. 22 enameled wire on the cold end of L3.

Capacitors are disc ceramic, except for C1 and C2 which are silver mica.

The crystal is a 5th overtone cut from 72.25 to 72.35 mc to keep the unit within the limits of the band, as the circuit tends to pull slightly off the crystal frequency.

The antenna is a 37-in. horizontal dipole mounted on top of the chassis box. Tune L3 for maximum output with a grid-dip oscillator.

The chokes are constructed as follows: Wind a 1/2-watt resistor with No. 36 enameled wire, using a glue base under the windings. When the glue has set, hold one end of the coil in your hand and attach the other end to the coil terminal of a grid-dip oscillator. The frequency should be within 10% of 145 mc. If it isn't, you should add or remove coils as necessary.

To adjust the neutralizing coil, L1, wind a full solenoid of No. 26 wire on a 1-meg, 1-watt resistor. The leads should be clipped off at about 1/2-in. and connected to the pins of the crystal. The resonant frequency of this circuit should be your proposed operating frequency.

PARTS LIST

Transistors
- Q1, Q2—2N1745

Resistors (ohms)
- R1—510
- R2—30K
- R3—10K
- R4—100

Capacitors (μf)
- C1, C2—0.001
- C3, C4—0.01
- C5—50
- C6—12, 5%

Miscellaneous
- L1—19 turns, No. 24 enameled on 1 meg, 1-watt resistor.
- L2—9-1/2 turns, No. 24 enameled on 5/16 in. D. slug-tuned printed circuit form.
- L3—6-1/2 turns, No. 24 enameled, spaced 1/16 in. on 5/16 in. D. slug-tuned form.
- L4—1-3/4 turns, No. 22 enameled wire on cold end of L3.
- Crystals: 5th overtone
- Antenna: 37-in. horizontal dipole mounted on chassis box
- RFC (3)—see text
- B1—9 volts

2 Two-Meter Transmitter Hunt Beacon

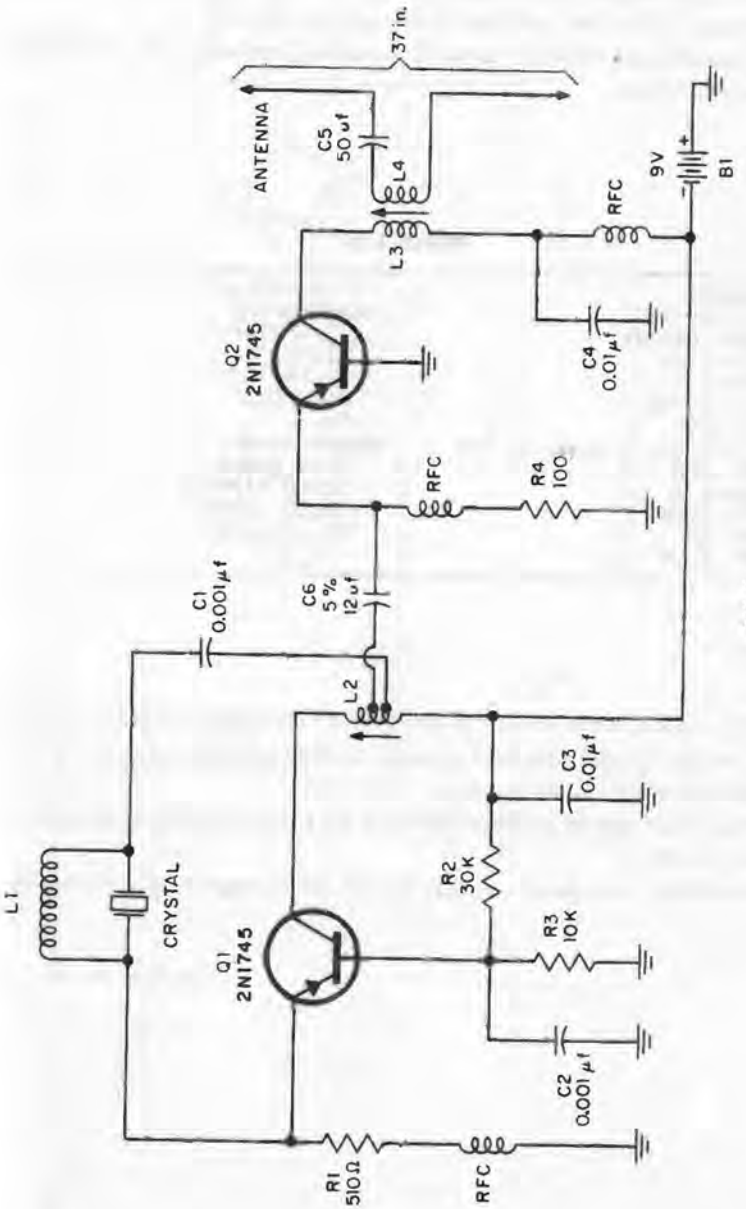

FIG. 2

3 TNS Mobile Noise Killer & Squelch

The TNS Mobile Noise Killer should give the same service available in popular "hard-tube" versions which sell for about $17.

All components should be as small as possible; remember this when making your selection.

PARTS LIST

Transistors	R10—25K pot.
Q1, Q2—SK7	**Capacitors (μf)**
Resistors (ohms)	C1—100 pf
R1—2.4K	C2—0.01
R2—2.7K	C3, C4—0.1
R3—1K pot.	C5—0.005
R4—26K	C6—1
(25K pot. in series with 1K)	**Miscellaneous**
R5—27K	Vector Board—1-1/2 in. x 3 in.
R6—4.7K	D1, D2—1N38B
R7—150K	D3, D4—1N294
R8—5K	B1—12 volts
R9—100K	

The squelch threshold may be changed by varying R3 and R4. R4 should start out as 26K, R3 may be a screwdriver-adjustable 1K resistor. The bias on both transistors should be about —0.2 volts.

This circuit can be easily constructed on a 1-1/2 in. by 3 in. piece of *Vector Board.*

This circuit has a positive supply line for use in negative ground vehicles.

3 TNS Mobile Noise Killer & Squelch

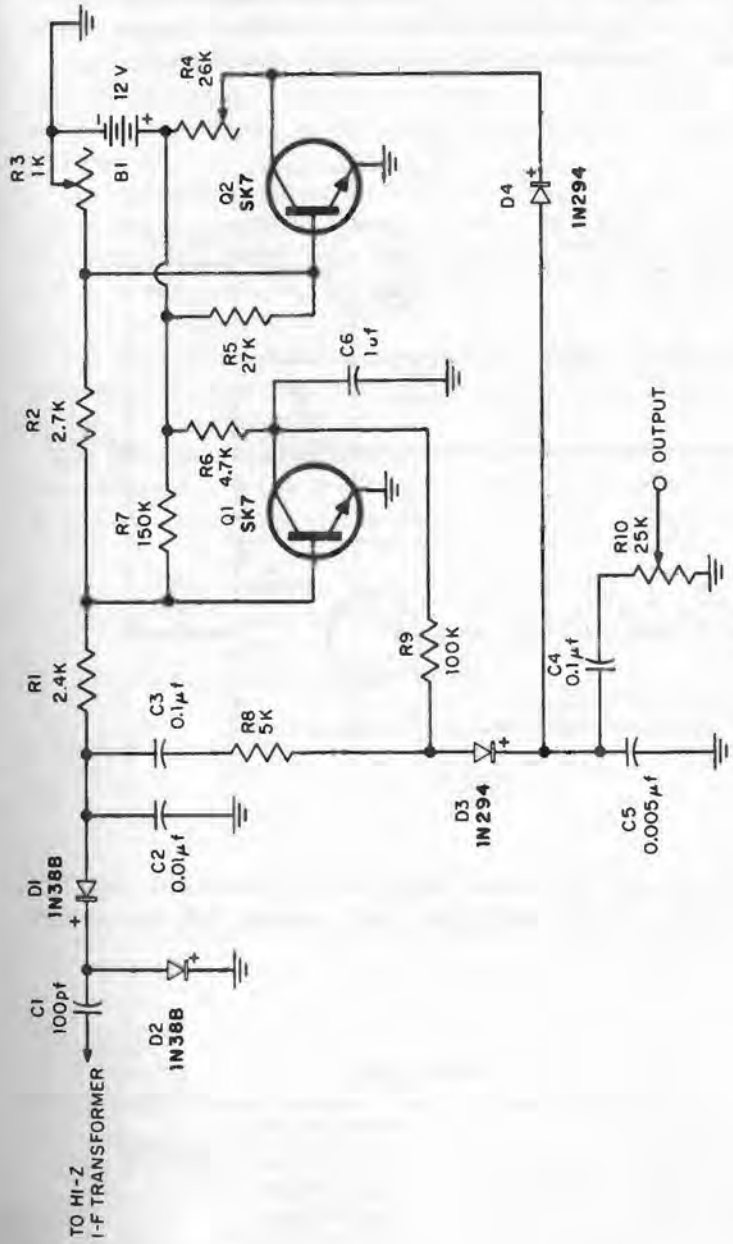

FIG. 3

4 SSB Test Oscillator

This two-tone, SSB test oscillator may be constructed on a piece of board about the size of a deck of playing cards. The output of this unit may be applied to a SSB generator for two-tone linearity measurements.

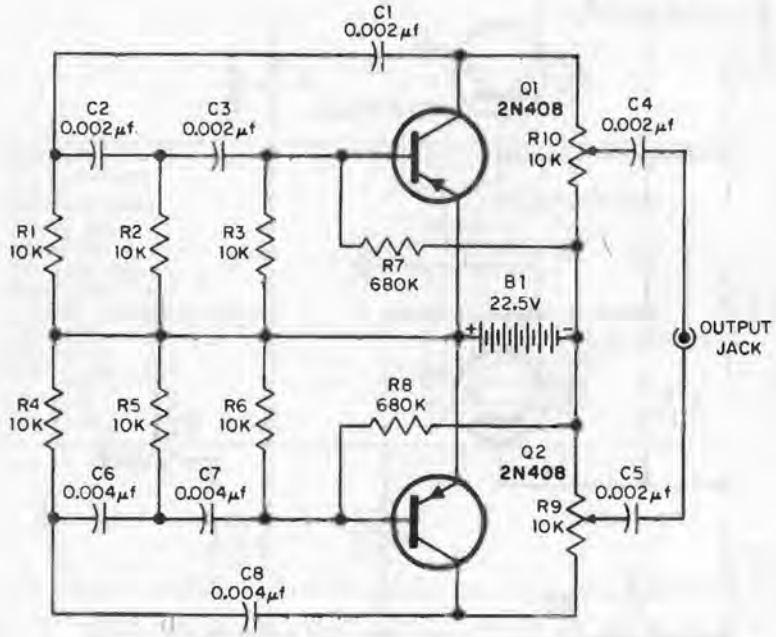

FIG.4

Components may be mounted on top of the construction board and soldered together beneath. Investigate using miniature 10K pots to keep the circuit small.

PARTS LIST

Transistors	**Capacitors (μf)**
Q1, Q2—2N408	C1, C2, C3, C4, C5—0.002
Resistors (ohms)	C6, C7, C8—0.004
R1, R2, R3, R4, R5, R6—10K	**Miscellaneous**
R7, R8—680K	Output jack
R9, R10—10K pots.	B1—22.5 volts

5 Wireless Microphone Broadcaster

These circuits have always been popular for both utility and entertainment purposes (candid microphones are made of this).

Our wireless mike is built with a minimum of components to save space and cost (cost is an important factor in case the victim of the candid mike treatment doesn't see the humor of the device and decides to end its career).

The broadcasting frequency of the unit is determined by L1 and the 365-pf variable capacitor. L1 consists of No. 7/41 *Belden* litz wire wound in a single close-spaced layer on a 7 in. by 0.33 in. ferrite rod. Leave 1/4-in. at each end of the rod. L2 is about 35 turns of No. 24 enameled wire wound directly on top of L1.

Any piece of stiff wire will serve as the antenna and will give good coverage. FCC regulations prohibit the antenna length from exceeding 10 feet.

Try your unit out at any convenient dead spot on the low end of the broadcast band. If it fails to transmit, try reversing the connections on L2. A ground connection is optional; it often helps.

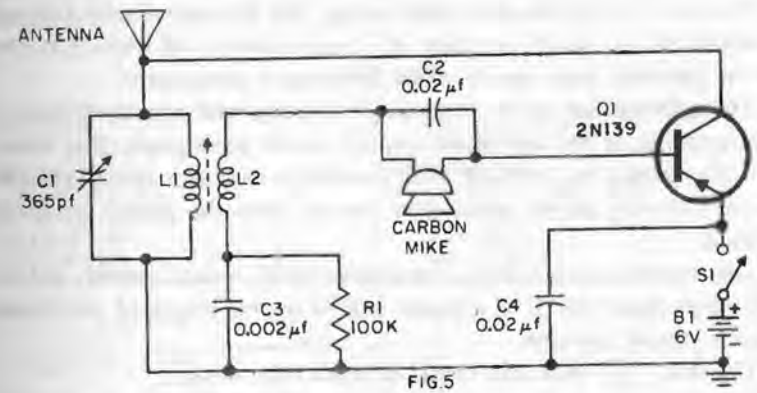

FIG.5

PARTS LIST

Transistors	**Miscellaneous**
Q1—2N139	L1—No. 7/41 Belden litz wire wound on 7 in. x 0.33 in. ferrite rod, single layer.
Resistors (ohms)	L2—35 turns, No. 24 enameled directly on L1.
R1—100K	Antenna: stiff wire
Capacitors (μf)	Carbon mike
C1—365-pf var.	B1—6 volts
C2, C4—0.02	S1—SPST
C3—0.002	

6 Wireless Phono Oscillator

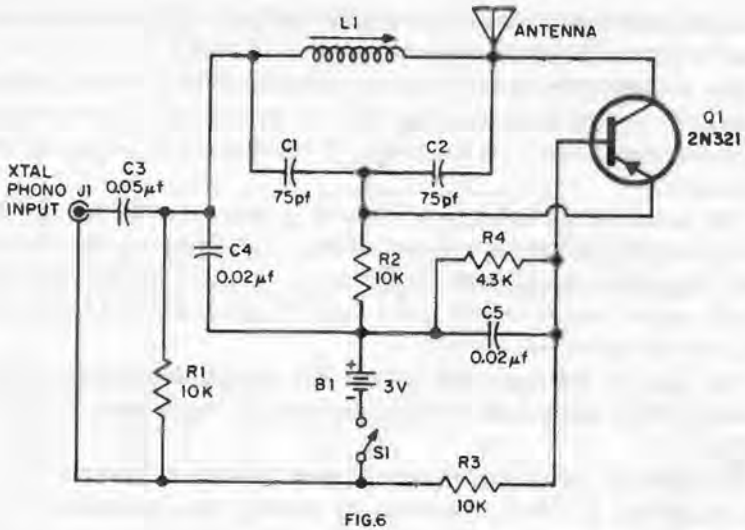

FIG.6

This is a form of wireless mike, except that it is specifically designed to enable you to use the amplifier of a better quality AM receiver instead of the relatively poor quality of an inexpensive phonograph.

The unit attaches to the phonograph cartridge and actually broadcasts the recording in the immediate vicinity of the phonograph. The device will also permit you to hear your recordings over any pocket portable receiver as long as you don't stray too far from the phono oscillator's antenna.

The transmitting frequency is controlled by L1, a vari-loopstick, and the two 75-pf capacitors. J1 is a phono jack to receive output of the phonograph's crystal cartridge.

The two 75-pf capacitors should be small mica units..

The antenna should not be longer than 10 feet to comply with FCC regulations.

PARTS LIST

Transistors	C3—0.05
Q1—2N321	C4, C5—0.02
Resistors (ohms)	**Miscellaneous**
R1, R2, R3—10K	L1—vari-loopstick
R4—4.3K	J1—phono jack
Capacitors (μf)	S1—SPST
C1, C2—75 pf	B1—3 volts

7 CB Channel Locator

This gadget will permit a CB'er to rapidly locate any CB channel on his receiver by mere insertion of a 3rd overtone CB transmitting crystal in the circuit.

The unit is housed in a 4-1/2 in. x 2-1/2 in. x 2 in. aluminum box. Construction hint: keep capacitor leads as short as possible. S1 is a SPST toggle switch.

The 1 meg variable resistor should be of the screwdriver-adjustable type and should start out at its point of highest resistance. Gradually back down on the resistor until the circuit (*without* a crystal installed) pulls about 0.2 ma on a milliammeter (install the meter in series with one of the battery leads).

Then, insert a crystal (3rd overtone *only*) and peak the circuit using the 50-pf variable capacitor, listening on your receiver for maximum signal reading. This capacitor should be peaked on each crystal used for maximum signal radiation.

L1 is a *B&W* 3003 coil.

This CB Channel Locator is also helpful as an aid in determining the radiation pattern of a base or mobile CB antenna. A short walk around the antenna, unit in hand, will show you peaks and nulls.

PARTS LIST

Transistors	C3—50-pf var.
Q1—2N372	C4—0.01
Resistors (ohms)	**Miscellaneous**
R1—1Meg pot.	Crystal: 3rd overtone
Capacitors (μf)	L1—B & W 3003
C1—4.7 pf	S1—SPST
C2—47 pf	B1—9 volts

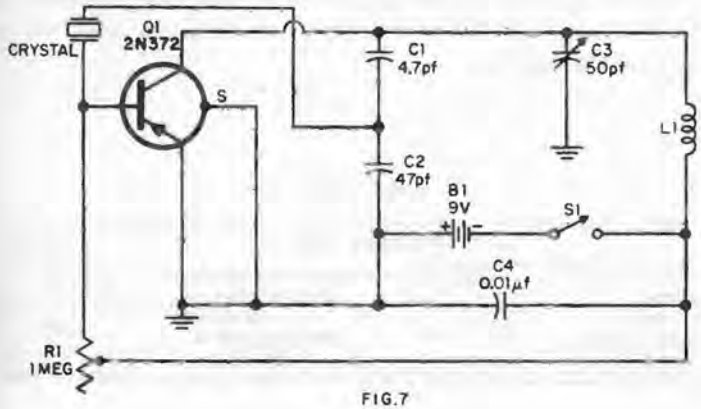

FIG.7

8 Microphone Booster

This little circuit was originally designed for use in CB transceivers, but it will also add zip to ham rigs. The entire assembly is small enough to be wired directly inside the microphone case! Yet, small as it is, it generally adds considerable audio gain to any unit into which it is wired.

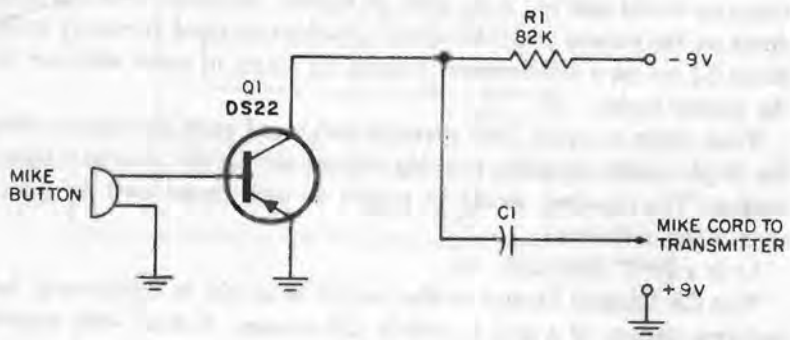

FIG.8

A 5-μf capacitor will give you good base-boost; however if you do not desire this feature you can replace the component with a 0.05-μf capacitor.

Should oscillations occur after the booster has been added, try inserting a filter capacitor (about 0.01-μf) at the mike plug on the transmitter. Do not put this on the audio output lead. If this does not cure the oscillation, use a 100K resistor at the mike plug where the lead from the mike enters the set. If all else fails, reduce the size of the 82K resistor to the point where the oscillations cease.

PARTS LIST

Transistors	**Capacitors (μf)**
Q1—DS22	C1—see text
Resistors (ohms)	**Miscellaneous**
R1—82K	Mike button

9 Light Controlled Relay

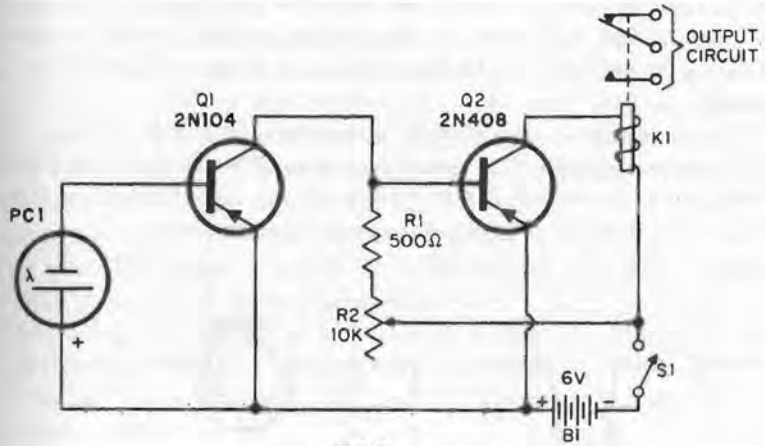

FIG.9

This light controlled relay has a number of photography applications and is interesting to the experimenter who wishes to explore the workings of a photocell.

The photocell here is an *International Rectifier* B2M. The relay, K1, can be any type which pulls less than 10 mils at 6 volts. The 10K potentiometer is the sensitivity control for the circuit.

PARTS LIST

Transistors	**Miscellaneous**
Q1—2N104	PC1—International Rectifier B2M.
Q2—2N408	S1—SPST
Resistors (ohms)	B1—6 volts
R1—500	K1—SPDT
R2—10K pot.	

10 Electroplater and Battery Charger

As an electroplater, this device should find many uses around any household. As a battery charger it will be of genuine value to all experimenters.

The unit is built in an aluminum box 5 in. x 10 in. x 2 in. The transistor should be mounted outside, on top of the aluminum box, so that it can have a heat sink—use a commercially available power transistor mounting kit so the case of the transistor will be insulated from the cabinet.

T1 is a 24-volt, 1-amp, filament transformer. SR1 is a 1.5-amp, full-wave selenium rectifier. The fuse is a 1.5-amp, 250-volt type with holder.

The output of this unit is 0 to 14 volts dc at 1 amp. Controlling factor for the output is the 200-ohm wirewound potentiometer.

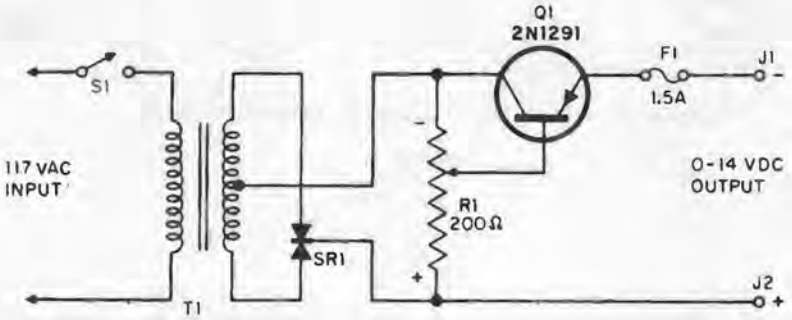

FIG. 10

Output of the unit can be metered by an external ammeter inserted between J1 and the load.

For electroplating stainless steel, nickel, bronze, copper, brass, tin, and other metals, check any of the several inexpensive books on the subject for instructions on handling the necessary acids and other materials which are part of this interesting art.

PARTS LIST

Transistors
Q1—2N1291
Resistors (ohms)
R1—200 w.w. pot.
Miscellaneous
T1—24-volt, 1-amp, filament transformer
F1—1.5-amp, 250-volt fuse with holder
S1—SPST
J1, J2—
SR1—1.5-amp, full-wave selenium rectifier

11 FM Interstation Quieter

Here's a squelch circuit to add to your FM receiver, similar to the ones used in commercial two-way radio installations. With this unit added to your receiver's circuit, you will have complete silence when tuning from one station to another. Only when you are tuned on to a station, will this circuit pass the sound on for you to hear.

The AGC from the tuner is fed into the unit at J1, which should be insulated from the chassis box of the squelch by a fiber or rubber washer. To locate the AGC in your receiver, you must know whether it has a ratio detector. If it does, then take the AGC from the negative end of the large, low-voltage electrolytic capacitor wired to the detector tube. If your unit has a *discriminator*, take the AGC from either pin 1 or pin 5 (whichever is not grounded) of the discriminator tube.

S1 is a SPST toggle switch. K1 is a 335-ohm relay. J1 is an insulated binding post. J2 and J3 are phono jacks.

The amount of squelch is controlled by varying the 1 meg pot. The unit may be switched off altogether by the toggle switch.

This unit may be used with AM receivers by connecting it into the AM receiver's AVC circuit.

PARTS LIST

Transistors
Q1—2N185
Q2—2N188A
Resistors (ohms)
R1—820
R2—12K
R3—1Meg pot.
R4—180
R5—270
Miscellaneous
J1—insulated binding post
J2, J3—phono jacks
S1—SPST
K1—335-ohm relay
B1—9 volts

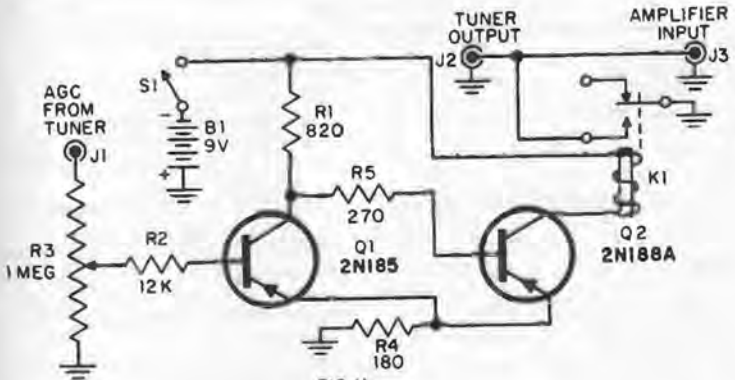

FIG. 11

12 Portable Broadcast Band Transceiver

A portable broadcast band transceiver will give your house a low-cost intercom system, will allow you to communicate with a similarly equipped vehicle while taking a road trip with friends, and is handy for general field and camping use because it is a handy little broadcast band receiver in addition to being a communications device.

All leads should be as short as possible when wiring the unit (which will fit into a cigar box). Main construction work can be completed on a piece of vector board or punched plastic cut to fit within the enclosure.

C1 is a so-called "gimmick" capacitor, which consists of two pieces of hook-up wire, one from S1a and one from S1b, loosely twisted together. Don't scrape off the enamel.

L1 is a ferrite loop antenna. L2 consists of 25 feet of No. 7/41 litz wire wound 3/4-in. length on a 1/2-in. diameter ferrite core. T1 is a 10K to 2K miniature driver transformer. T2 is a 2K to 100-ohm miniature output transformer. The speaker is a 10-ohm, 2-1/2-in. type.

S1 is a four-pole double-throw unit with return lever action. S2 is part of a 10K miniature volume control with switch.

A series of small holes should be drilled in the enclosure for the loudspeaker/microphone.

The antenna can be a length of wire (not to exceed 10 feet), your car antenna, or a telescoping type which can be mounted directly on the enclosure.

To operate, turn on the volume control/switch and rotate for maximum volume. C2 should enable you to tune the receiver across the broadcast band. Increased volume may be obtained by manipulating the location of the antenna end of L1 and C4 in relation to each other.

PARTS LIST

Transistors
- Q1—2N164A
- Q2—2N109

Resistors (ohms)
- R1—270K
- R2, R3—270
- R4—100K
- R5—10K miniature, with switch S2
- R6—33K

Capacitors (μf)
- C1—see text
- C2—365-pf var.
- C3—365 var.
- C4—100 pf, 1000V
- C5, C7, C10—0.01
- C6, C8, C12—25
- C9, C11—100

Miscellaneous
- D1—1N34
- L1—ferrite loop antenna
- L2—25 ft. No. 7/41 litz wire on 1/2 in. D. ferrite core, 3/4 in. length
- T1—10K to 2K miniature driver transformer
- T2—2K to 100-ohm miniature out transformer
- Speaker: 10-ohm, 2-1/2 in.
- S1—4PDT, return lever
- S2—on R5
- B1—6 volts
- Antenna—see text

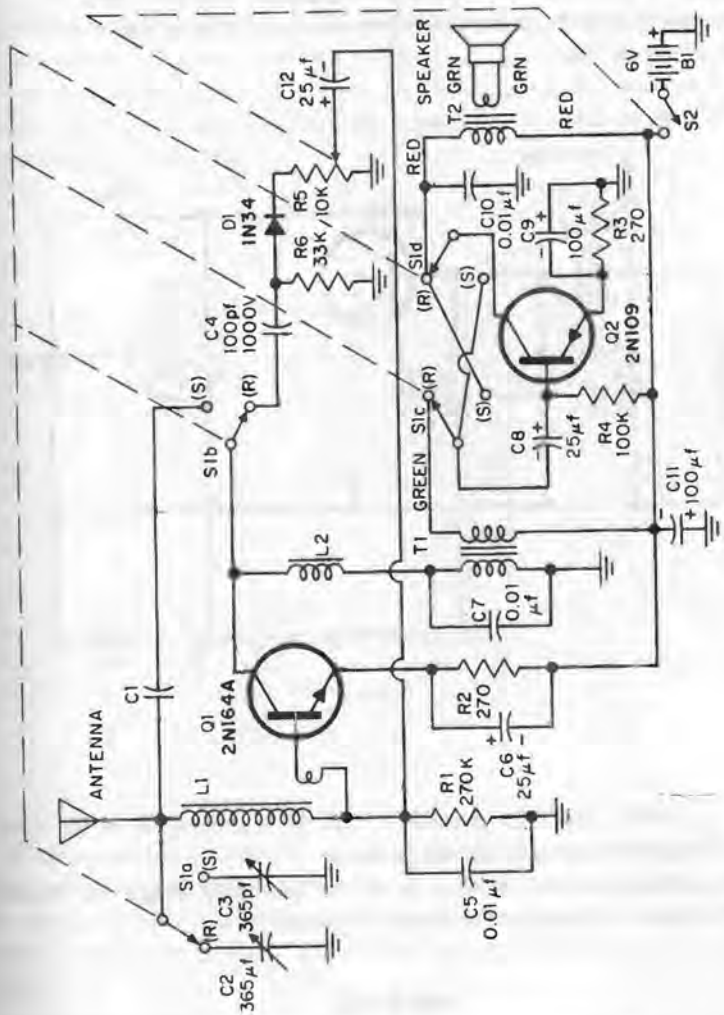

FIG.12

When transmitting, the frequency is determined by C3. If there is excessive squealing, the "gimmick" may have to be decreased—or increased if the signal is weak. It will be necessary for you to transmit and receive on two different frequencies to prevent feedback. Feedback can also be caused by poor positioning of S1c and S1d leads.

13 AM Broadcast Tuner

This AM broadcast tuner will convert a phonograph or audio amplifier into a household radio. It has a high-impedance output.

The unit may be built in a small case about 1-1/2 in. x 2 in. x 2-1/2 in., either plastic or fiber.

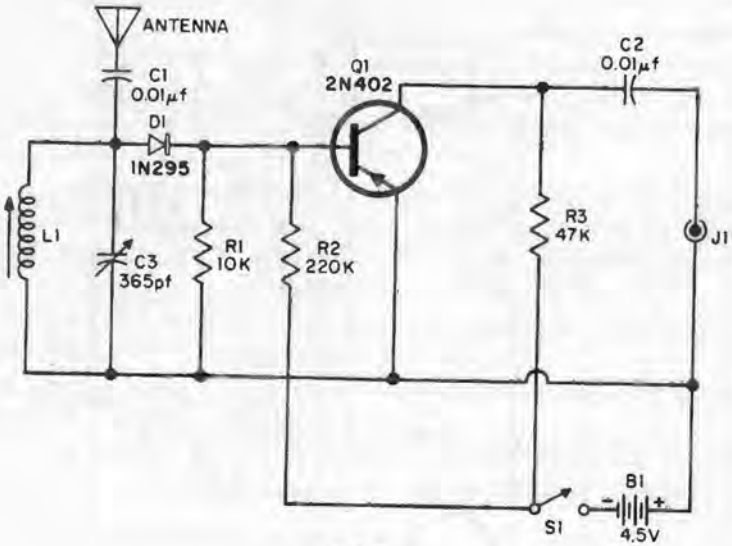

FIG. 13

S1 is a SPST switch. L1 is a ferrite coil. J1 is the output of the tuner and a standard phono jack should be used.

The antenna does not have to be of any particular length—a random length of wire will suffice, the longer the better.

PARTS LIST

Transistors	C3—365-pf var.
Q1—2N402	**Miscellaneous**
Resistors (ohms)	D1—1N295
R1—10K	S1—SPST
R2—220K	J1—standard phono jack
R3—47K	L1—ferrite coil (standard broadcast)
Capacitors (μf)	B1—4.5 volts
C1, C2—0.01	

14 Blinker

This little gadget, unfortunately, does not have much use, but it is an attention getter and will make an interesting conversation piece on your desk. It's a blinker—just a neon glow bulb sticking out of a box—and it blinks on and off at any rate you desire.

The unit can be built in a 3 in. x 2 in. x 1 in. plastic case with the transformer mounted on top, the NE-2 neon bulb, and the control shaft of the potentiometer protruding.

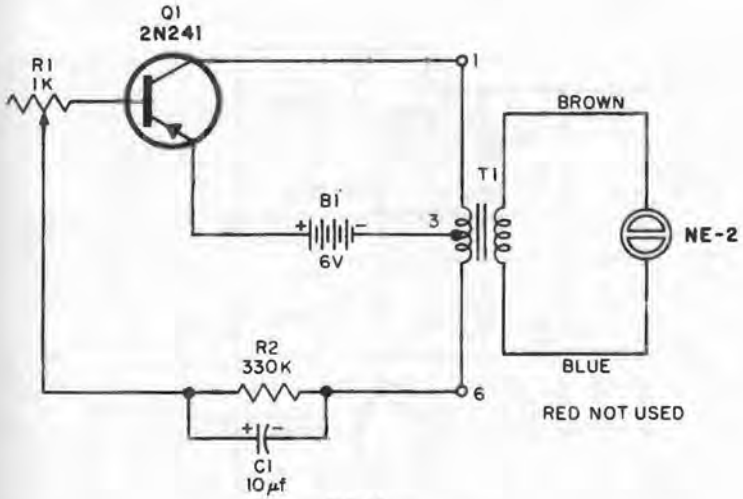

FIG. 14

T1 is a universal output transformer. There is no on-off switch because there is hardly any battery drain. The 1K potentiometer controls the rate at which the bulb will blink; the blink rate can vary from about 1 flash every 3 seconds to so many per second that it looks almost like a steady light.

PARTS LIST

Transistors	**Capacitors (μf)**
Q1—2N241	C1—10
Resistors (ohms)	**Miscellaneous**
R1—1K pot.	Neon Bulb: NE-2
R2—330K	T1—universal output transformer
	B1—6 volts

15 A Watt and One-Half on 80 Meters

This circuit uses two 2N269 transistors in push pull to develop about a watt and one-half on the 80-meter ham band.

Coil L1 is 30 turns, center tapped, on a 1-in. coil form. With the 200-pf capacitor plates half-meshed, the coil should resonate at the low end of the band.

The link is made by tightly winding 4 turns and coupling them at the center of L1.

The transistors should be loaded to about 50 mils in the bottom of the dip with a potential of 30 volts on the collectors.

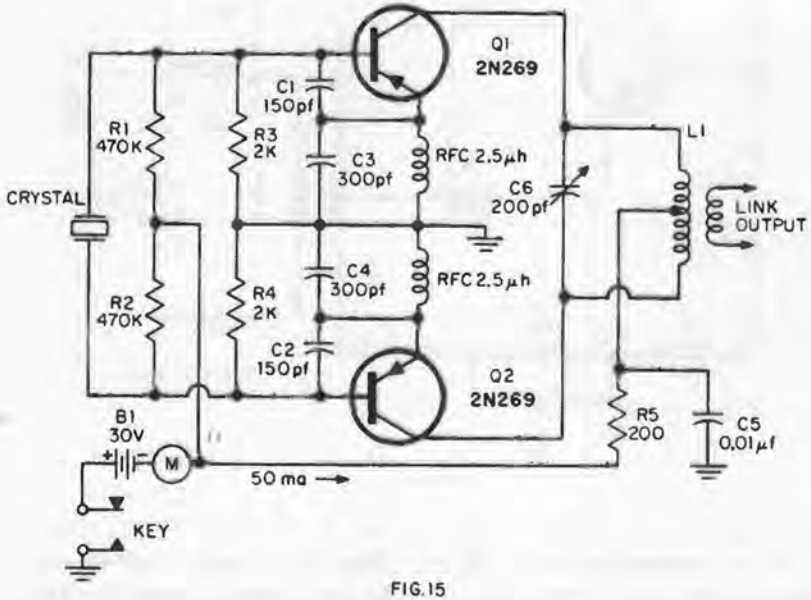

FIG. 15

PARTS LIST

Transistors	C6—200-pf var.
Q1, Q2—2N269	**Miscellaneous**
Resistors (ohms)	L1—30-turn, center tapped coil on 1-in. form
R1, R2—470K	Link—see text
R3, R4—2K	Crystal
R5—200	Key
Capacitors (μf)	RFC-(2) 2.5 μh
C1, C2—150 pf	Ammeter
C3, C4—300 pf	B1—30 volts
C5—0.01	

16 Battery Eliminator

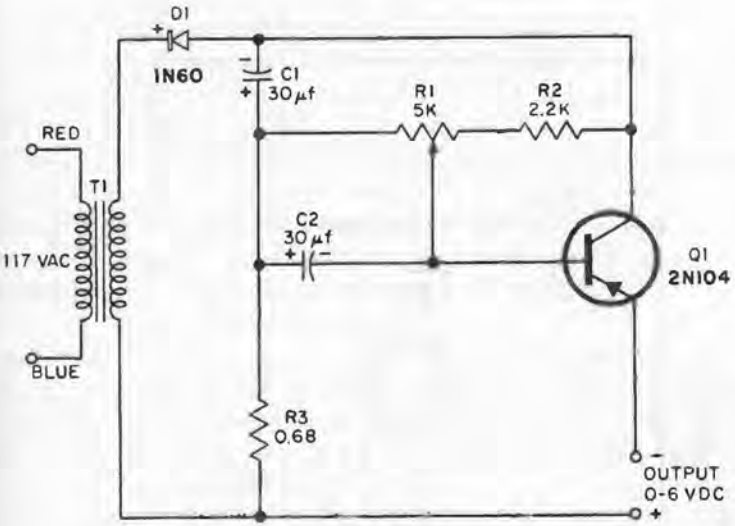

FIG. 16

If you have constructed and experimented with transistor circuits, you may be getting weary of working with batteries. This device plugs into your household current and converts it to from almost zero to 6 volts at 5 ma.

This unit will go together in a 2 in. x 2-1/2 in. x 1-1/2 in. box. The transformer is a standard transistor audio transformer.

To protect the transistor, the current output requirement should not go over 5 ma.—this can be checked with a 0-5 milliammeter in the circuit at the output.

When working with a new circuit, start out with the output all the way down, then slowly advance it until the unit functions properly. It might be wise to insert the meter in the unit while testing all new circuits.

PARTS LIST

Transistors	**Capacitors (μf)**
Q1—2N104	C1, C2—30
Resistors (ohms)	**Miscellaneous**
R1—5K pot.	T1—standard transistor audio transformer
R2—2.2K	D1—1N60
R3—0.68	

17 FM Broadcaster

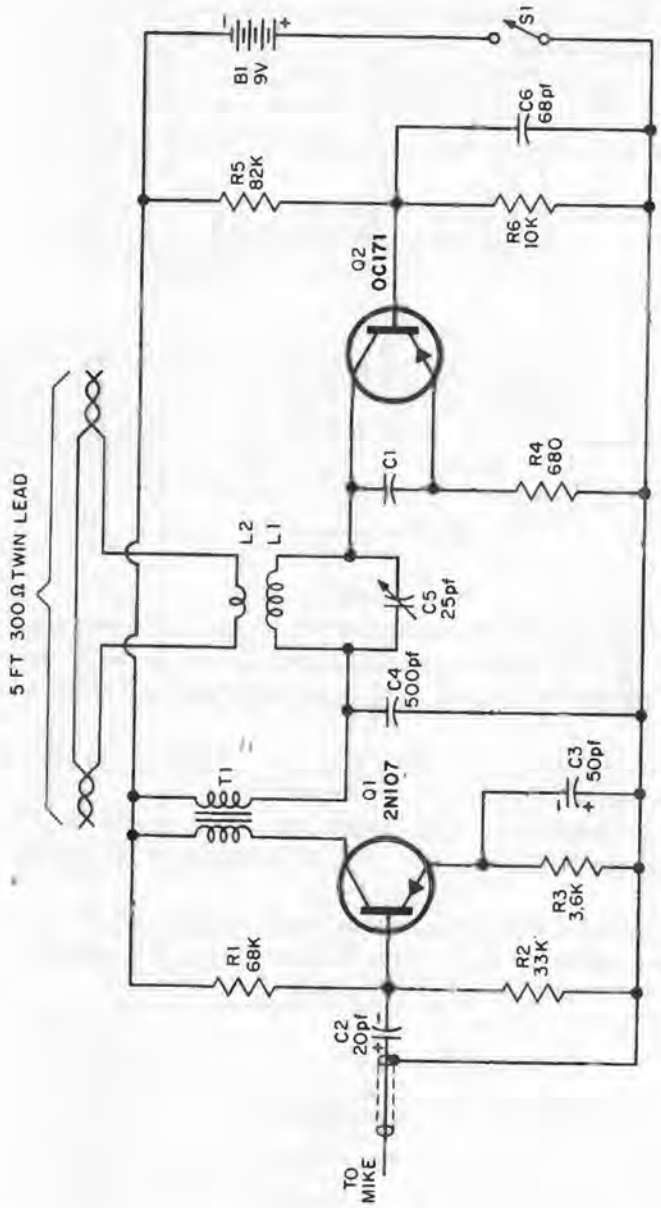

FIG. 17

17 FM Broadcaster

The FM Broadcaster can be used as a wireless mike in conjunction with an FM receiver hooked into a PA system. It can also be used for home entertainment as it will transmit high-fidelity voice or music through any FM receiver in the house.

Construction of this unit is not particularly critical—capacitor leads should be be kept short though. Input of the unit takes a low-impedance dynamic mike or a magnetic recording cartridge.

C1 is a "gimmick" consisting of two 1-in. insulated leads tightly twisted and hooked across the collector and emitter of the OC171.

T1 is a 20K to 400-ohm type.

Coil L1 is the tank coil. It is made of 14 gauge buss wire wound on a 3/8-in. form. It is 5 turns spaced over a 3/4-in. length. The frequency radiated by the FM Broadcaster should be near the top of the FM band, and may be varied by spreading or compressing the turns slightly and varying the 25-pf capacitor's setting.

For nonportable use, the unit's coverage may be extended by the addition of a 5-ft. folded dipole made from 300-ohm TV twinlead and link coupled to the tank coil (L1) with a single link.

Before putting this unit on the air, it is suggested that you double check Part 15 of the FCC regulation governing the use of such devices.

PARTS LIST

Transistors	C3—50
Q1—2N107	C4—500 pf
Q2—OC171	C5—25-pf var.
Resistors (ohms)	C6—68 pf
R1—68K	**Miscellaneous**
R2—33K	T1—20K to 400-ohm
R3—3.6K	L1—tank coil, 14 gauge buss wire on 3-8/in. form; 5 turns over 3/4 in. length
R4—680	L2—optional, see text
R5—82K	Twinlead—optional, see text
R6—10K	S1—SPST
Capacitors (μf)	B1—9 volts
C1—see text	
C2—20	

18 Supersonic Transceiver

Here's an experiment in supersonic communications—even though the unit described has a very short range. The transmission range of the unit can be greatly increased by the addition of a transistor audio amplifier to the circuit.

Heart of the circuit is a *Workman TV* transistor. The headphones are about 2K impedance.

Coil L1 consists of exactly 5 turns of No. 12 wire wound on an 18-in. diameter by 5/8-in. high form (try the top of a peach basket). Turns should be spaced 1/8 in. on centers. L2 is one turn. Both transceivers must have exactly the same coils for communications.

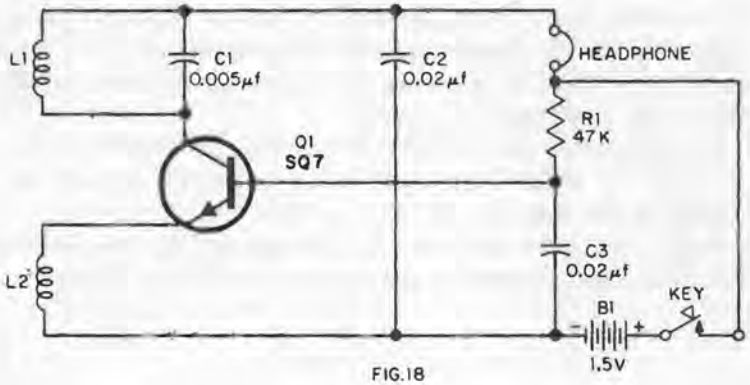

FIG.18

To test the units, place them two feet apart on a wooden tabletop. Press the key on one of the units—a click should be heard in the headphones of both units. Try this with the other unit. If all is well with both units, leave both keys closed and manipulate the spacing of the coils until a pure tone is heard.

For receiving—one transceiver should have its key held closed while someone keys the other unit.

PARTS LIST

Transistors	**Miscellaneous**
Q1—SQ7	L1—5 turns No. 12 on 18-in. D. x 5/8-in. high form
Resistors (ohms)	L2—1 turn
R1—47K	Key
Capacitors (μf)	B1—1.5 volts
C1—0.005	Headphones: 2K impedance
C2, C3—0.02	

19 Electronic Organ

Here is an interesting experiment in audio which would make a nice toy for a child.

Our electronic organ will play but one note at a time—its keys being made of spring-return pushbuttons (like doorbell buttons) mounted on a board.

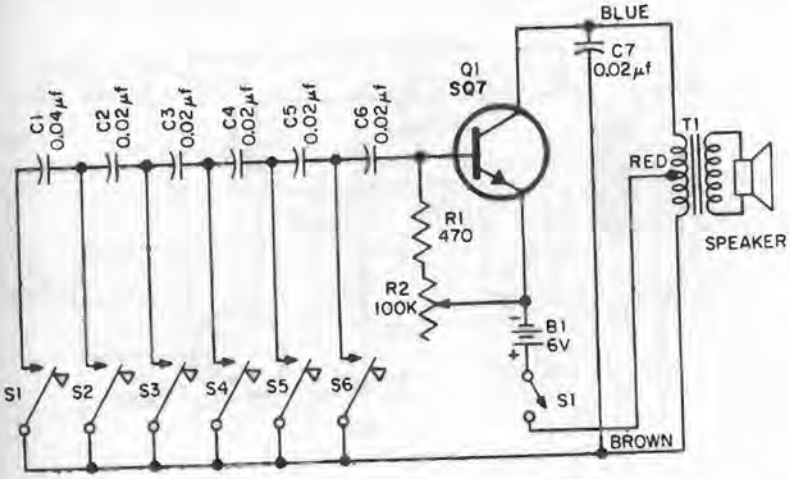

FIG.19

The loudspeaker can be any 3- to 5-ohm unit about 5 or 6 in. in size. Connect the speaker to the secondary winding terminals No. 1 and No. 2 of T1 (a *Stancor* A-3856).

To raise the tonal range of the unit, change the value of the 0.04-μf capacitor, C1, to 0.02 μf. The 100K potentiometer controls the frequency range.

The unit is turned on and off by means of S7, a SPST switch.

PARTS LIST

Transistors	**Miscellaneous**
Q1—SQ7	S1, S2, S3, S4, S5, S6—see text
Resistors (ohms)	S7—SPST
R1—470	T1—Stancor A-3856
R2—100K pot.	Speaker: 3- to 5-ohm unit, 5- to 6-in.
Capacitors (μf)	B1—6 volts
C1—0.04	
C2, C3, C4, C5, C6, C7—0.02	

20 Fire Alarm

This device uses a glass-bead-type 1N34 diode as a fire hunter. The unit can be constructed in a small metal box; however, the 1N34 should be mounted outside the box on a terminal strip.

Also mounted outside of the chassis enclosure are the bell (6-volt doorbell) and the transistor.

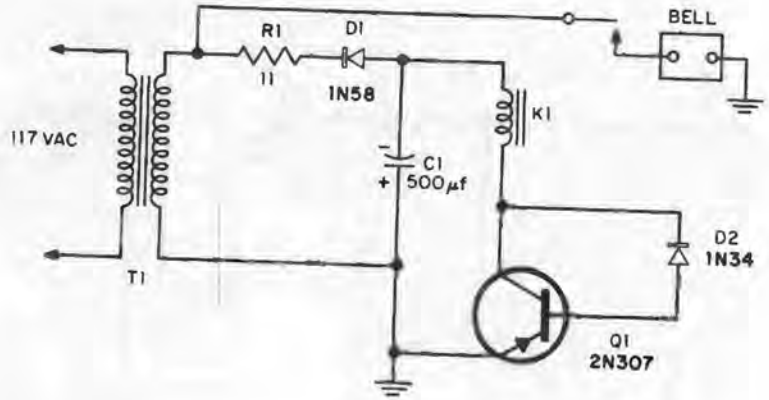

FIG.20

The transformer is a 117 volts ac to 6 volts ac filament type, the relay a 180-ohm, 12-volt type with SPST-NO contacts.

Place the unit near the ceiling in any room which you wish protected. Additional 1N34's can be located in other rooms and wired into this unit to give increased coverage.

PARTS LIST

Transistors	**Miscellaneous**
Q1—2N307	D1—1N58
Resistors (ohms)	D2—1N34
R1—11	T1—117 volts to 6 volts filament type
Capacitors (μf)	K1—relay, 18 ohms, 12 volts, SPST-normally open
C1—500	Bell—6-volt doorbell

21 Telephone Amplifier

The telephone amplifier described here will enable you to play a telephone conversation for a group of people, or it can be used for the hard of hearing.

The transformer is a transistor audio output type with a 500-ohm primary impedance, such as the *Argonne* AR-118. L1 is an induction coil designed for telephone pickup, such as the one made by Argonne, or Magnetic Recording Industries. The speaker is a 10-ohm, 1-1/2-in. miniature.

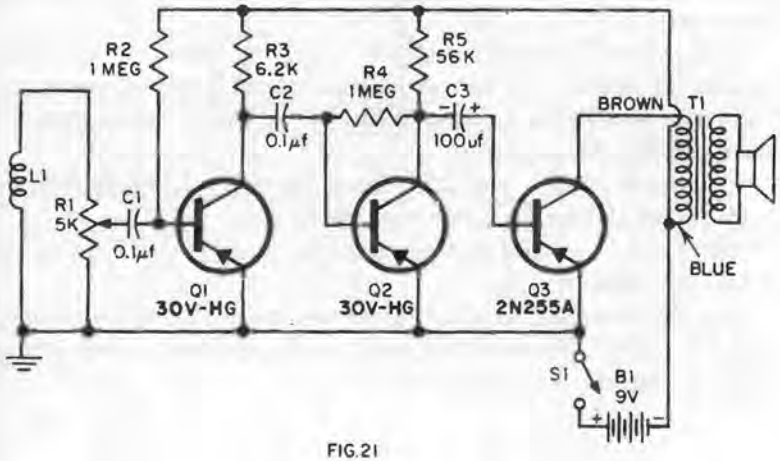

FIG.21

Be careful not to place the amplifier's loudspeaker too close to the telephone's transmitter or you'll have feedback problems. The 5K potentiometer is the volume control and may be helpful in controlling feedback.

PARTS LIST

Transistors	**Miscellaneous**
Q1, Q2—30V-HG	T1—transistor audio output with 500-ohm primary impedance Argonne AR-118
Q3—2N255A	L1—induction coil for telephone pickup
Resistors (ohms)	Speaker: 10-ohm, 1-1/2 in. miniature
R1—5K pot.	B1—9 volts
R2, R4—1Meg	S1—SPST
R3—6.2K	
R5—56K	
Capacitors (μf)	
C1, C2—0.1	
C3—100	

22 Portable Transceiver

This unit operates under Part 15 of the FCC's rules. It must not be operated unless the certification card (or reasonable facsimile; see page 32) is signed by the holder of at least a Second-Class Radiotelephone Operator License after he has seen the unit and checked it over.

The transceiver can be built in a 3-1/2 in. x 2-1/8 in. x 2 in. aluminum box with the components mounted inside on a perforated board. Keep all component leads short.

L1 and L4 are *J. W. Miller Co.* No. 70F155A1, 15-μh, subminiature, r-f chokes. L2 and L3 are *J. W. Miller* No. 70F126A1, 1.2-μh, subminiature, r-f chokes.

S1 is a DPDT miniature toggle with a spring return. J1 is a banana jack for the antenna. The antenna must not exceed 5 feet in length—there are a number of telescoping antennas on the market which should fill the bill in this department.

The mike is a carbon type, 1.5K. The earphone is a 1K magnetic type—it plugs into J2 which is a miniature phone jack.

The crystals to be used in this unit are 3rd overtone types in miniature ("HC-18") holders.

Peak the transmitter by adjusting the two variable capacitors associated with the 2N741. This should be done in conjunction with a field strength meter or S-meter.

PARTS LIST

Transistors
- Q1, Q2—2N741
- Q3—2N1192

Resistors (ohms)
- R1, R5—100K
- R2—10K
- R3—240
- R4—15K pot. with switch
- R6—1K
- R7—470K

Capacitors (μf)
- C1—3.5-12-pf var.
- C2, C8—7-35-pf var.
- C3, C4, C5, C6, C9, C11—0.005
- C7—5
- C10—5 pf

Miscellaneous
- L1, L4—15 μh subminiature r-f chokes, **J. W. Miller Co.**, No. 70F155A1
- L2, L3—1.2 μh subminiature r-f chokes, **J. W. Miller Co.**, No. 70F126A1
- Microphone—carbon, 1.5K
- Earphone—magnetic, 1K
- Crystal: 3rd overtone in miniature holder
- Antenna—see text
- S1—DPDT, mini. toggle, with spring return
- S2—part of R4
- J1—banana jack
- J2—miniature phone jack
- B1—12 volts

22 Portable Transceiver

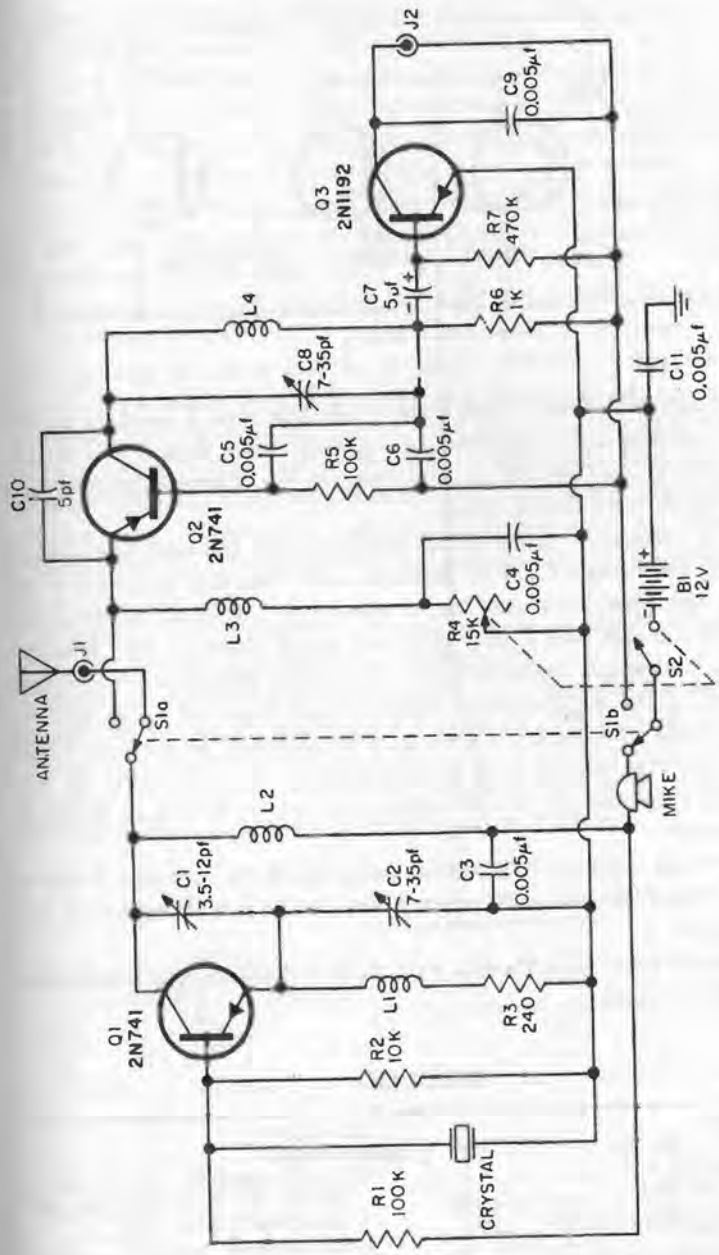

FIG. 22

23 Siren

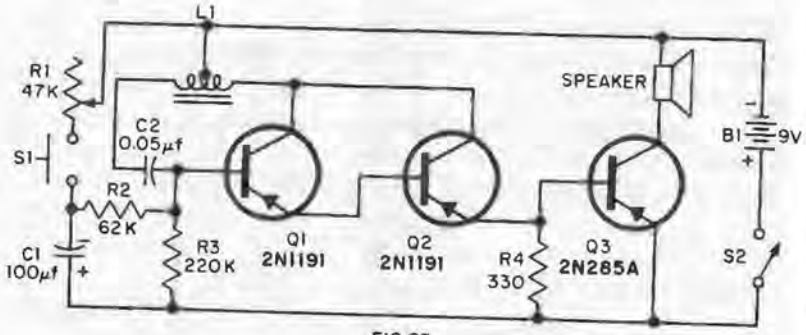

FIG. 23

Here's one which will create quite a stir. Use it as a doorbell, at parties, as a desktop attention getter, or a general racket maker. Its "whoop-whoop-whoop" will remind old Navy men of the "General Quarters" call or the submariner's diving alarm.

Coil L1 consists of 300 turns of No. 30 nyclad insulated wire wound on a core consisting of 1/4-in. diameter, 2-in. long iron bolt with a nut on each end. First, screw one nut to about 1-1/2 in. from the head end and cover the bolt with a layer of *Scotch Brand* electrical tape. Scramble wind the 300 turns between the nut and bolt head, keeping the wire evenly distributed in the space, although tightly wound. Bring out a 2-in. loop for the center tap after the first 150 turns, then complete the winding. Finish off the coil with another layer of electrical tape over the winding. The center tap loop connects to the negative side of the battery as shown in the schematic.

The 0.05-μf capacitor will control the pitch of the tone and it can be changed. The 62K and 220K resistors can also be varied to produce differing results.

The speaker can be a 45-ohm type. S1 is a doorbell type pushbutton, S2 is a SPST toggle.

PARTS LIST

Transistors
- Q1, Q2—2N1191
- Q3—2N285A

Resistors (ohms)
- R1—47K pot.
- R2—62K
- R3—220K
- R4—330

Capacitors (μf)
- C1—100
- C2—0.05

Miscellaneous
- L1—300 turns No. 30 nyclad on 1/4-in. D., 2-in. iron bolt with nut at each end.
- Electrical tape
- Speaker: 45-ohm
- S1—doorbell pushbutton
- S2—SPST toggle
- B1—9 volts

24 Slave Flash Unit

Photographers are generally reluctant to string long wires to extension flash units—they constitute a safety hazard, they are cumbersome to use, and cumbersome to travel with. This unit performs the same operation but requires no extension cords. The unit uses a light-sensitive photocell to pick up the light from the flash unit at the camera and trigger the extension flash a few milliseconds later.

The unit is constructed in a small metal box with a hole cut in the side for the photocell to receive the light impulses. The photocell used is an *International Rectifier Corp.* B2M.

The circuit uses a *Advance* type SO relay with a 10K coil, slightly adjusted. When the unit is fully constructed, install a voltmeter across the relay contacts and short out the flashbulb socket. A voltage should be present. Now adjust the gap between relay contacts to minimum spacing which will not trip the relay when the unit is jarred. Now, with the photocell exposed to normal light conditions, the relay armature spring tension should be adjusted until the contacts close (voltage will disappear from the voltmeter). Then, tighten the spring slightly until the relay opens. This should be the permanent setting—normal lights in the room should not trigger your circuit.

To prevent accidental discharge when placing a flashbulb in the device, it is wise to keep your finger over the photocell.

Maximum synchronization between the slave unit and the bulb at the camera can be attained when using a Class M (Press 25, or No. 5) on the camera and a Class F (SF or SM) on the slave. This should work well at speeds up to 1/50 of a second. If you are not getting both units to fire simultaneously try reducing the shutter speed slightly.

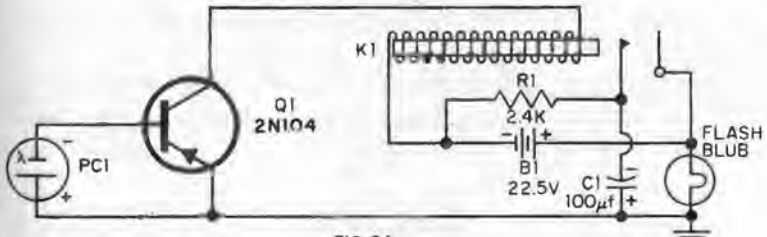

FIG. 24

PARTS LIST

Transistors
- Q1—2N104

Resistors (ohms)
- R1—2.4K

Capacitors (μf)
- C1—100

Miscellaneous
- PC1—International Rectifier Corp. B2M
- K1—Advance SO with 10K coil
- Flashbulb
- B1—22.5 volts

25 Metronome/Metal Locator

This device transmits a radio signal consisting of a series of "clicks." The clicks may be used as a metronome (their rate can be varied), or as a locator of large underground metallic objects.

Coil L1 consists of a 6-in. length of any diameter ferrite antenna rod wrapped neatly with 40 close-space turns of No. 26 insulated magnet wire in a single layer. Tap the winding at 20 turns.

Used as a metronome, the unit will transmit to any nearby radio and you need not worry about where to tune it in because it will be received on all frequencies. The click-rate is varied by the 25K potentiometer.

If you wish to use it as a metal locator, you will need a 10-ft. plank and transistor receiver. On one end of the plank, nail a small piece of wood to which the transistor portable may be attached and pivoted—to do this you will need only 1 nail in the center of the piece of wood. Then, attach the metal locator device at the other end of the plank.

With both units on, turn the receiver around on its pivot so that even with its volume control "wide open", it cannot receive the locator's signal. This is the "null" point of the receiver's directional antenna.

You are now ready for action.

Take the entire two-radio unit to where you suspect there is a large metallic body beneath the ground, holding the plank parallel to the ground. As you go over the object you will suddenly hear the receiver start to pick up the clicks from the device. As you move the plank back and forth over the object, the clicks will enable you to determine the approximate area which it covers.

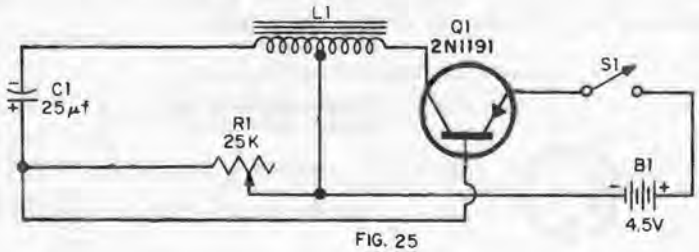

FIG. 25

PARTS LIST

Transistors	**Miscellaneous**
Q1—2N1191	L1—40 close-spaced turns of No. 26 insulated magnet wire tapped at 20 turns
Resistors (ohms)	B1—4.5 volts
R1—25K pot.	S1—SPST
Capacitors (μf)	
C1—25	

26 Clorox Powered AM Radio

This little crystal receiver has a transistor amplifier and a *Clorox* laundry bleach power supply.

L1 is a standard ferrite loopstick—as is L2.

The electrodes consist of a 3-in. strip of zinc and a 3-in. copper rod. For operation of the receiver, place both in a glass of *Clorox* laundry bleach.

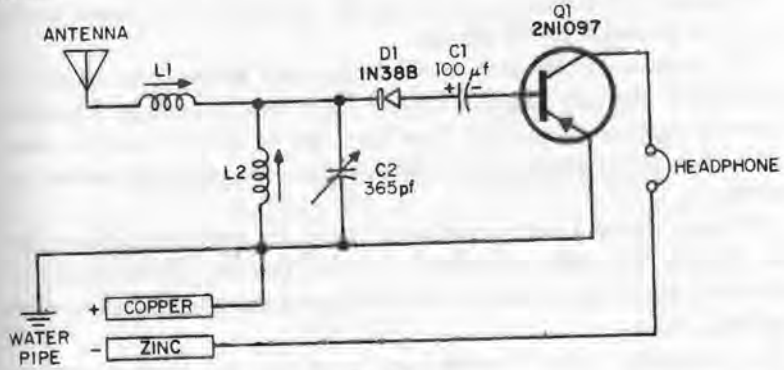

FIG. 26

String up a long antenna, ground the set to a cold water pipe or other good ground, and you have a receiver which will never need battery replacement (except as the *Clorox* exaporates or the zinc eventually disintegrates).

The 365-pf variable capacitor will enable you to tune across the standard AM broadcasting band.

Stations can be heard on any low-impedance headset.

To adjust the set for proper operation, move the L2 slug all the way in, and tune with the variable capacitor until a station is heard. Then adjust L1 for maximum volume. L2 should then be adjusted so that the widest possible segment of the broadcast band can be tuned with the variable capacitor.

PARTS LIST

Transistors	**Miscellaneous**
Q1—2N1097	L1, L2—standard ferrite loopstick
Capacitors (μf)	D1—1N38B
C1—100	Electrodes: 3-in. strip of copper; 3-in. strip of zinc
C2—365-pf var.	**Clorox**
	Headphone—low impedance

27 Telemetering Transmitter

This little device is designed to be hoisted aloft in a balloon. Once up it will broadcast its temperature findings back to earth in either the 11-meter CB band or the 10-meter ham band.

Construction is simple and should be kept as compact as possible, using a perforated board as the chassis. The crystal is a 3rd overtone type cut for either the 10- or 11-meter bands.

The antenna is a 9-in. length of No. 18 buss wire for 11-meter operation, an 8-in. length for 10 meters.

Once constructed, the unit should be carefully wrapped in a piece of polyethylene (laundry bag) to protect it from weather damage. Naturally, leave the antenna protruding. This then can be placed inside a small padded box for attachment to the balloon. Put your name and address on the box.

We have shown a thermistor in the circuit for indication of temperature changes. You might try a *Philco* 33-1343-3 or *GC GLOBAR* 25-922, calibrating them with a known temperature on the ground before sending them aloft.

For operation in the 10-meter ham band, you will need an amateur license of General Class grade or higher. If you wish to operate this within the limits of the 11-meter Citizens Band, you will have to take the unit to a qualified technician and have him certify the unit, attesting to the certification on the form shown here, or a reasonable facsimile. In either case, whether the unit is operated in the 10- or 11-meter bands, some form of license or certification will have to be packed with the unit—a photocopy of the ham license for 10-meter use, the unit certification for 11-meter use.

CERTIFICATE OF EXAMINATION

I have examined this low-power communications device and find that it will comply with Section 15.205 of the Federal Communications Commission's Rules and Regulations, provided that the antenna is a single element not more than 5 ft. long and that the dc potential applied to the modulator does not exceed 19.5 volts. A third overtone quartz crystal no lower in frequency than 26.980 mc nor higher than 27.260 mc must be used as the frequency determining element.

Date _____

Signature of Technician _____

FCC License # _____

27 Telemetering Transmitter

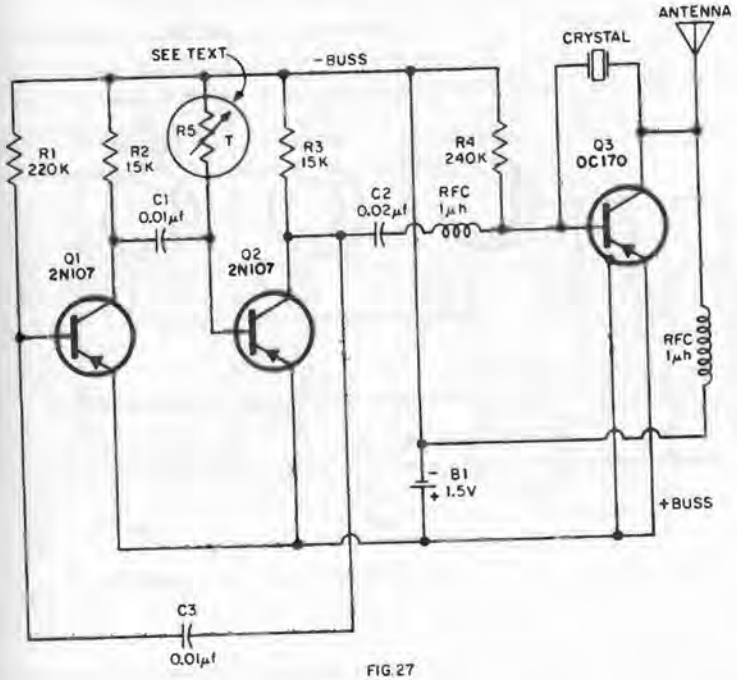

FIG. 27

PARTS LIST

Transistors
Q1, Q2—2N107
Q3—OC170

Resistors (ohms)
R1—220K
R2, R3—15K
R4—240K
R5—thermistor, Philco 33-1343-3 or GC GLOBAR 25-922

Capacitors (μf)
C1, C3—0.01
C2—0.02

Miscellaneous
Antenna: 9-in. No. 18 buss wire for 11-meter operation; 8 in. for 10 meters.
B1—1.5 volts
RFC—1 μh
Crystal: 3rd overtone

28 High-Sensitivity Hearing Aid

This unit was designed to fit in a tiny plastic box. With it you will be able to increase your hearing range so that you can hear a whisper from across a large room.

Construction is non-complicated. Use a *Shure Brothers* MC-30 miniature microphone, and hearing-aid or magnetic transistor-portable type earphone.

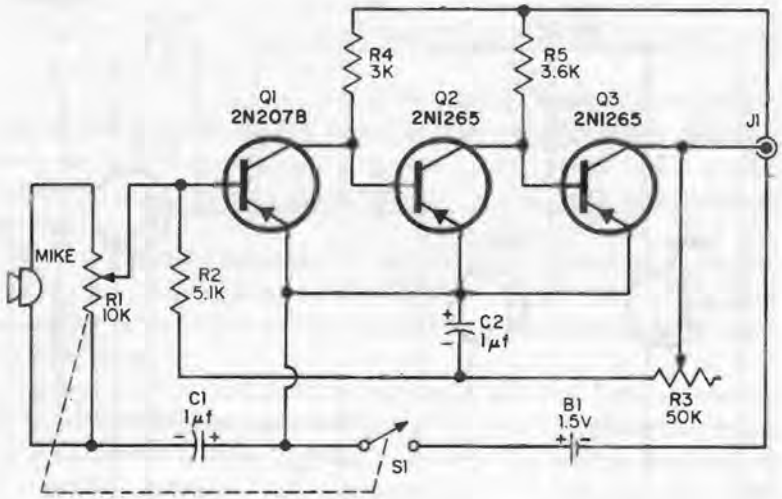

FIG. 28

The volume control is the 10K potentiometer, tone control is the 50K potentiometer. The 10K potentiometer is also the *on-off* switch (*Lafayette* VC43). The headphone plugs into J1, which should be a miniature phone plug.

PARTS LIST

Transistors
- Q1—2N207B
- Q2, Q3—2N1265

Resistors (ohms)
- R1—10K pot. with switch, Lafayette VC43
- R2—5.1K
- R3—50K pot.
- R4—3K
- R5—3.6K

Capacitors (μf)
- C1, C2—1

Miscellaneous
- S1—part of R1
- J1—miniature phone plug
- Microphone: Shure MC-30
- B1—1.5 volts

29 Two-Transistor Receiver

This receiver was designed for use with an inexpensive crystal earphone.

There is nothing special about this circuit which must have an involved explanation. The coil, L1, is a regular vari-loopstick. Tuning is accomplished by the 365-pf variable capacitor.

To adjust the circuit for maximum operation, set the variable capacitor for minimum capacity and tune the coil's slug so that the highest frequency local broadcast station in your area can be heard well.

A 32-in. antenna will give good results for portable use; for fixed use, the longer the better.

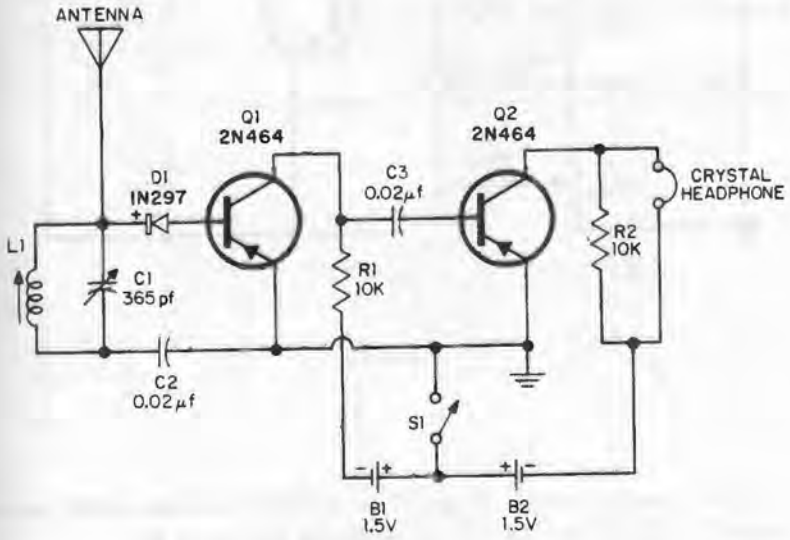

FIG. 29

PARTS LIST

Transistors
- Q1, Q2—2N464

Resistors (ohms)
- R1, R2—10K

Capacitors (μf)
- C1—365-pf var.
- C2, C3—0.02

Miscellaneous
- D1—1N297
- L1—vari-loopstick
- Antenna—32 in.
- Crystal headphone
- B1, B2—1.5 volts

30 Audio Mixer

The Audio Mixer permits two-microphone operation for audio and recording applications or for mixing microphone and radio signals into a recording machine.

The three jacks can be any type which is compatible with your existing equipment.

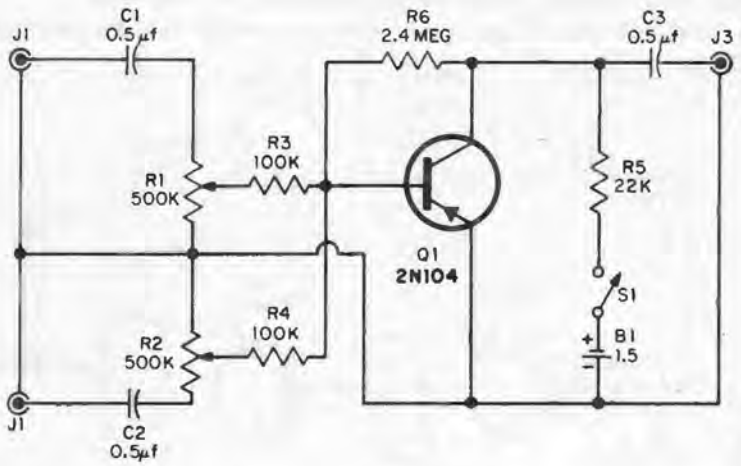

FIG. 30

Signals coming through J1 and J2 are mixed by the two 500K potentiometers, fed into the 2N104, and deposited for use at J3.

It is suggested that this circuit be housed in a metal box and that all wiring be shielded wire to eliminate the possibility of hum.

PARTS LIST

Transistors	**Capacitors (μf)**
Q1—2N104	C1, C2, C3—0.5
Resistors (ohms)	**Miscellaneous**
R1, R2—500K pots.	J1, J2, J3—see text
R3, R4—100K	S1—SPST
R5—22K	B1—1.5 volts
R6—2.4Meg	

31 Six-Meter Preamplifier

Want to add some gain to your 6-meter receiver? This little unit will do it for you.

Coils L1 and L4 are 2 turns of No. 20 insulated wire at the center of L2 and L3. L2 and L3 consist of 8 turns of No. 16 enameled wire close-wound on a 1/2-in. diameter.

Keep leads as short as possible between components.

PARTS LIST

Transistors	**Miscellaneous**
Q1—2N384	L1, L4—2 turns No. 20 insulated at centers of L2, L3
Resistors (ohms)	L2, L3—8 turns No. 16 enameled wire close-wound on 1/2 in. D.
R1—2.7K	B1—1.5 volts
Capacitors (μf)	B2—9 volts
C1, C2—25-pf var.	S1—DPST, toggle
C3, C4—0.001	
C5—0.01	

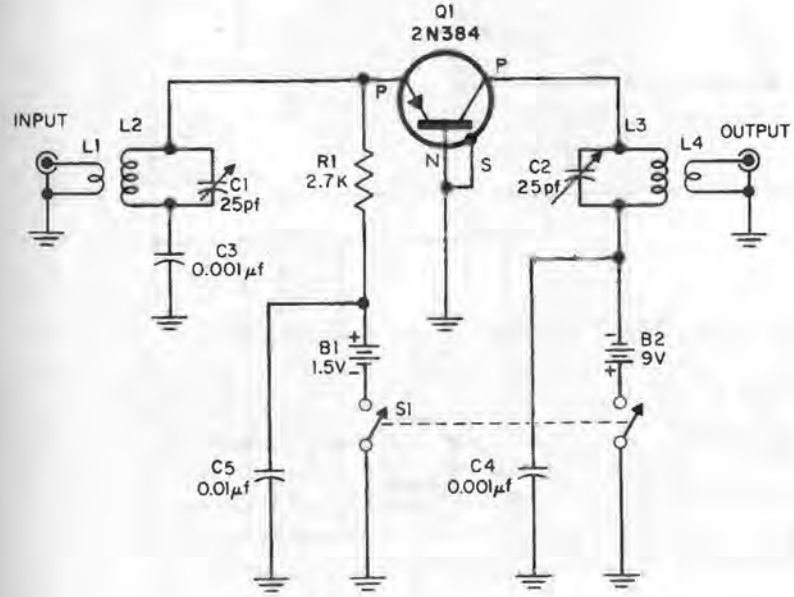

FIG. 31

32 100 KC/1 MC Frequency Standard

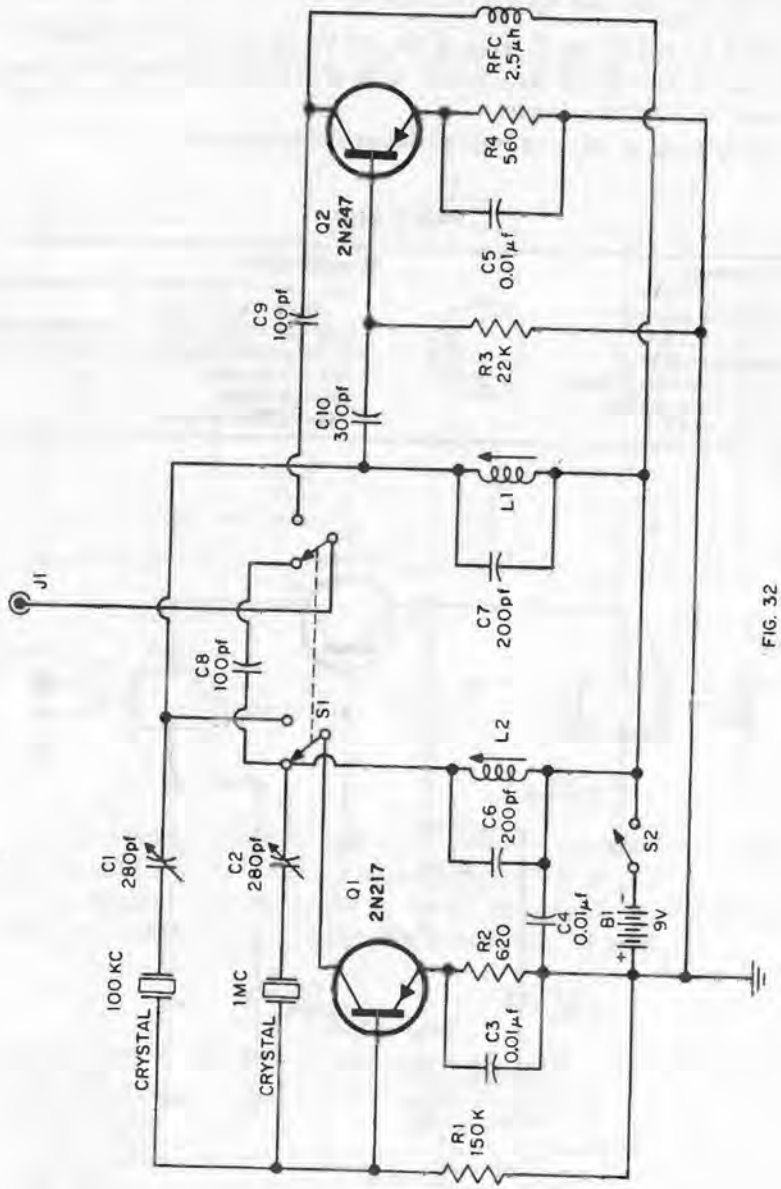

FIG. 32

32 100 KC/1 MC Frequency Standard

A handy item to have around any communications shack or experimental lab is a frequency standard—ours will give you markers each 100 kc or 1000 kc, whichever you need.

Construction is best completed on a perforated board and then encased in a small metal cabinet.

Coils L1 and L2 are a *Miller* 6314 and 6196, respectively. They should be adjusted before the unit is turned on—lining up the slugs with the lower coil winding.

S1 is a DPDT slide switch. It selects the 100-kc and 1-mc crystals for the circuit.

PARTS LIST

Transistors	C8, C9—100 pf
Q1—2N217	C10—300 pf
Q2—2N247	**Miscellaneous**
Resistors (ohms)	Crystals: 100 kc; 1 mc
R1—150K	L1—Miller 6314
R2—620	L2—Miller 6196
R3—22K	S1—DPDT slide
R4—560	S2—SPST
Capacitors (μf)	J1—banana socket
C1, C2—280-pf var.	R-f choke—2.5 μh
C3, C4, C5—0.01	B1—9 volts
C6, C7—200 pf	

The crystals should be removed from the unit and a 10-ma meter connected in series with the battery. The unit should be turned on, and the meter will read about 150 microamperes if the device has been constructed properly. Then, with the 100-kc crystal re-installed, and the switch set for the 100-kc position, the meter should read about 3.5 ma. Adjust L1 for maximum meter reading. Repeat this procedure with the 1-mc crystal and L2 (remember to change the crystal selector switch). Now, insert a 10-in. antenna into J1 (a bananna plug will fit into J1 and may be wired to the bottom of a 10-in. piece of heavy wire).

With the meter removed, let the unit warm up for a few minutes, then zero beat the standard against WWV by adjusting the two 280-pf variable capacitors—one to beat the 100-kc crystal and one to beat the 1-mc crystal.

33 Hearing-Aid-to-Radio Converter

All grounds are common to the hearing aid converter chassis. Coil L1 is a transistor loop antenna such as the *Miller* 2000.

The transformer is a driver type for transistor use. It has a 15K primary, and a 200-ohm secondary (try *Argonne* type AR-107).

The leads from the transformer's secondary go to the hearing aid microphone. The unit is tuned by the variable capacitor C1.

PARTS LIST

Transistors	**Miscellaneous**
Q1—2N216	T1—15K primary 200-ohm secondary Argonne AR-107
Capacitors (μf)	L1—transistor loop antenna (Miller 2000)
C1—365-pf var.	B1—3 volts
C2—0.1	

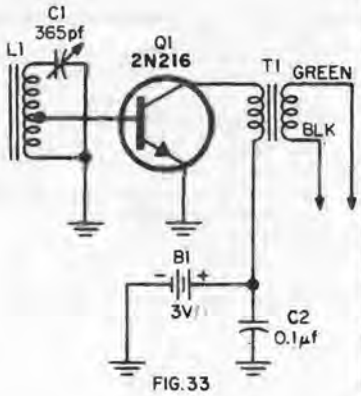

FIG. 33

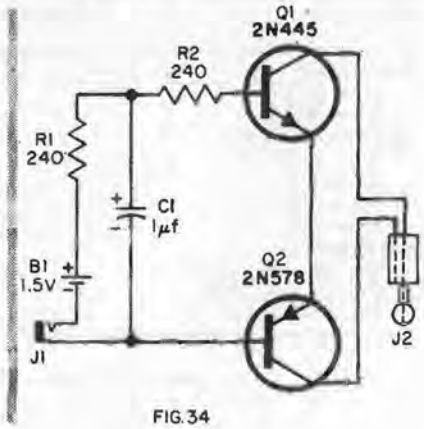

FIG. 34

34 The Key-Click Killer

This circuit was developed to eliminate those annoying clicks and thumps which plague the transmissions of many CW operators.

The key is inserted in J1, J2 is the connection to the transmitter key-jack. *Do not leave* the key pressed down with this device in the circuit.

PARTS LIST

Transistors	**Resistors (ohms)**
Q1—2N445	R1, R2—240
Q2—2N578	**Capacitors (μf)**
	C1—1

35 2-to-20-Meter Field Strength Meter

This field strength meter enables you to check your relative output on the 2-, 6-, 10-, 15-, and 20-meter ham bands and on the 11-meter Citizens Band when the proper coils are inserted in the circuit.

The 20-meter coil is 11 turns of No. 22 enameled wire on a 1-in. diameter form wound on a 1/2-in. space.

The 15-meter coil is 8 turns of No. 22 enameled wire on a 1-in. diameter form wound in a 3/8-in. space.

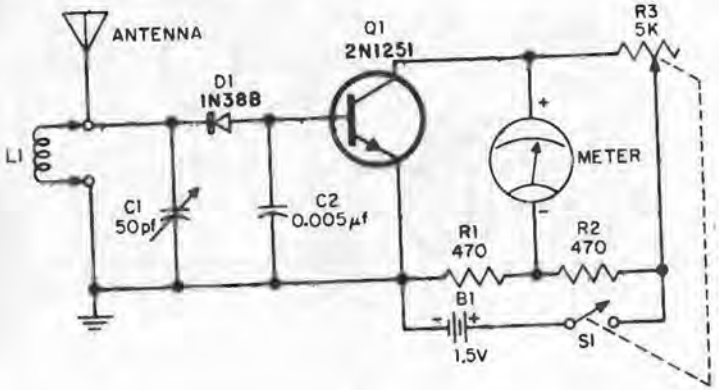

FIG. 35

On 10 and 11 meters, the coils will consist of 5 turns of No. 22 enameled wire on a 1-in. form wound in a 1/4-in. space.

6 meters requires 5 turns of No. 22 enameled wire on a 1/4-in. form spaced over 1/4 in.

On 2 meters it's 3 turns of No. 20 enameled wire airwound with a 1/4-in. diameter and spaced 1/4 in.

The meter is a 0-1 ma meter.

The 5K potentiometer is used to set the meter reading to zero when the power is turned on.

PARTS LIST

Transistors	C2—0.005
Q1—2N1251	**Miscellaneous**
Resistors (ohms)	L1—see text
R1, R2—470	D1—1N38B
R3—5K pot. with switch	B1—1.5 volts
Capacitors (μf)	Meter: 0-1 ma
C1—50-pf var.	S1—part of R3

36 40-Watt Modulator

This modulator is simple to construct, however, be prepared to spend about $35 towards having one before you read further. It was designed to plate modulate 60- to 90-watt transmitters.

The mike is a standard carbon type, T1 is a *Triad* S-58X, T2 is a *Lafayette* TR-94, T3 is a *Triad* TY-65A.

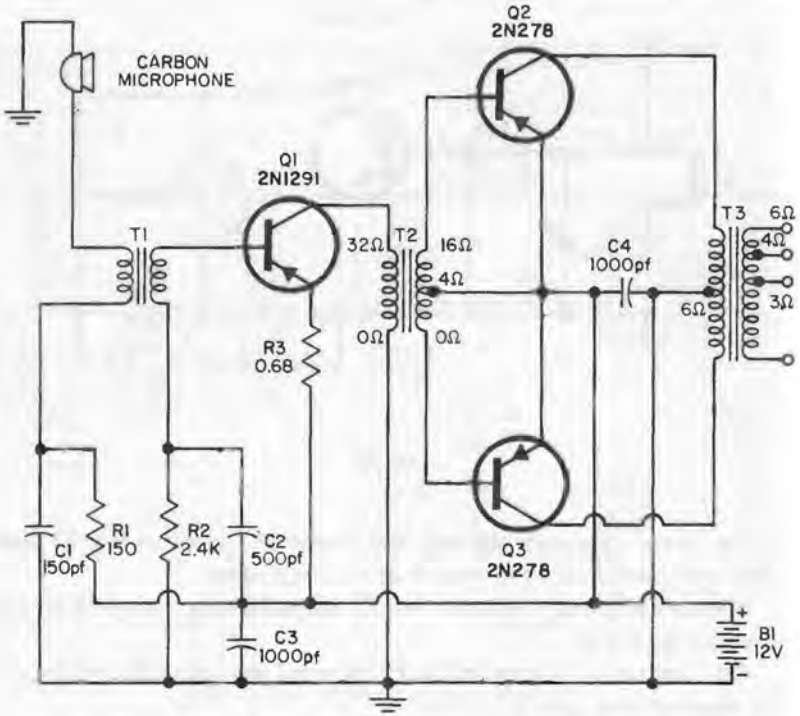

FIG. 36

PARTS LIST

Transistors	C2—500 pf
Q1—2N1291	C3, C4—1000 pf
Q2, Q3—2N278	**Miscellaneous**
Resistors (ohms)	T1—Triad S-58X
R1—150	T2—Lafayette TR-94
R2—2.4K	T3—Triad TY-65A
R3—0.68	Carbon microphone
Capacitors	B1—12 volts
C1—150 pf	

37 Cathode Modulator for CW Transmitters

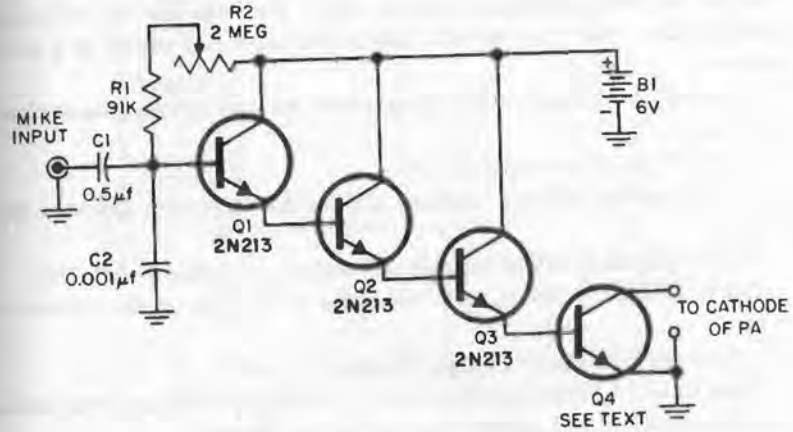

FIG. 37

If your low-power ham CW transmitter is set up for cathode keying, this unit plugs directly into the key jack (instead of the key) to give you about 75% modulation. The circuit also acts as a clamp and will limit the amount of cathode current should the final lose drive.

Q4 should be chosen to suit your individual transmitter. The amount of cathode current which will flow through it will be the determining factor. It is an n-p-n type.

A crystal microphone should be used at the input of the device.

To use the unit, tune up as you would for normal CW operation. Adjust the 2-meg potentiometer until you get a reading of maximum change in cathode current as you modulate.

PARTS LIST

Transistors	**Capacitors (μf)**
Q1, Q2, Q3—2N213	C1—0.5
Q4—see text	C2—0.001
Resistors (ohms)	**Miscellaneous**
R1—91K	Microphone: crystal
R2—2Meg pot.	B1—6 volts

38 Ship-to-Shore SW Converter

This converter allows you to tune in the 2- to 3-mc marine band on your car or home standard broadcast radio. The unit can be easily constructed on a piece of punched construction board and placed in a metal cabinet.

The coils are the only tricky thing about the unit so here's an explanation of each.

L1 is simply a vari-loopstick coil.

L2 is a transistor-circuit oscillator coil for 455 kc (try a *Lafayette* MS-165).

L3 is a transistor tapped variable coil such as the *Lafayette* MS-299.

L4a is a *Miller* B-5495-C with additional 5 windings of No. 20 enamel wire.

L4b consists of the additional windings on L4a.

Coils L1 and L3 require removal of the wrapping of enamel wire which is free on one end and soldered to a coil lug on the other.

PARTS LIST

Transistors	**Miscellaneous**
Q1—2N140	L1—vari-loopstick
Resistors (ohms)	L2—transistor osc. coil for 455 kc **(Lafayette** MS-165)
R1—4.3K	L3—transistor tapped variable coil **(Lafayette** MS-299)
R2—22K	L4a—Miller B-5495-C
R3—1.6K	L4b—5 turns No. 20 enameled, wound on L4a
R4—100K	S1—DPDT slide
Capacitors (μf)	S2—SPST slide
C1, C2, C3—0.01	B1—9 volts
C4—50 pf	
C5—330 pf	
C6—100 pf	
C7—0.01	

Remainder of the construction is cut and dried. S1 is a DPDT slide switch, and S2 is a SPST slide switch. S1 will allow you to hear the marine band (with S2 *on*) or use the external antenna to hear the broadcast band on your standard radio.

Then to put the converter *on the air* for the first time, coil L4 must be tuned so that it oscillates on 3.5 mc. L2 and L3 are peaked for maximum reception while tuned to a station transmitting in the 2-3 megacycle range. L1 is used to attenuate interference from local broadcast stations.

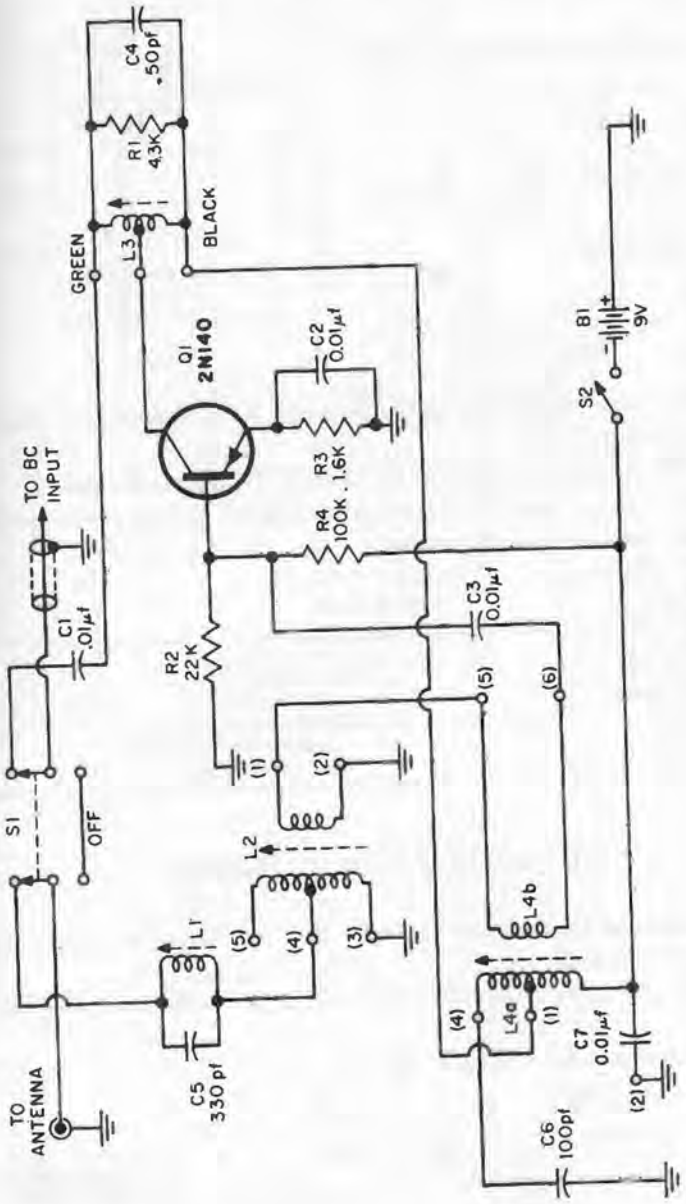

FIG. 38

39 Carbon Mike Preamplifier

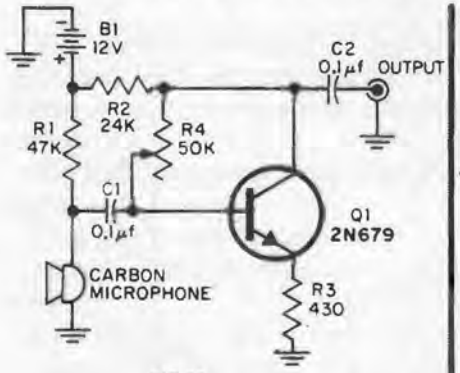

FIG.39

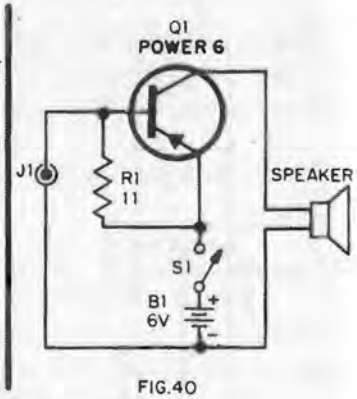

FIG.40

Boosting the normally low output of a carbon microphone is a simple task with this preamp.

The 50K potentiometer should be adjusted for best audio quality.

Construct it in a metal container, grounding all ground points to the box. Keep leads as short as possible.

PARTS LIST

Transistors	R4—50K pot.
Q1—2N679	**Capacitors (μf)**
Resistors (ohms)	C1, C2—0.1
R1—47K	**Miscellaneous**
R2—24K	Carbon microphone
R3—430	B1—12 volts

40 Public Address System

This miniature PA system can be built right into the speaker enclosure, power supply and all.

The unit is supplied with audio from any carbon mike *with good sensitivity.*

The speaker is a heavy-magnet PM type.

S1 is a SPST toggle.

PARTS LIST

Transistors	**Miscellaneous**
Q1—Power 6	Speaker: heavy magnet
Resistors (ohms)	J1—input jack
R1—11	S1—SPST toggle
	B1—6 volts

41 Noise Limiter

This is a straightforward design utilizing 2 diodes functioning in the manner of a 6AL5 vacuum tube.

The unit can be mounted in a small metal box and mounted near the mobile rig. S1 cuts the device in and out of the receiver's circuit.

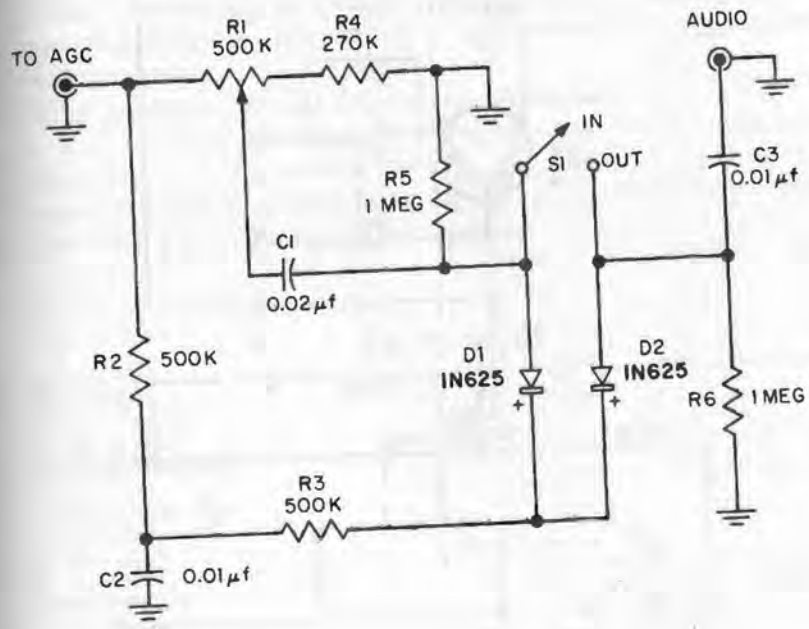

FIG. 41

PARTS LIST

Resistors (ohms)	**Capacitors (μf)**
R1—500K pot.	C1—0.02
R2, R3—500K	C2, C3—0.01
R4—270K	**Miscellaneous**
R5, R6—1Meg	D1, D2—1N625
	S1—SPST

42 CB Receiver

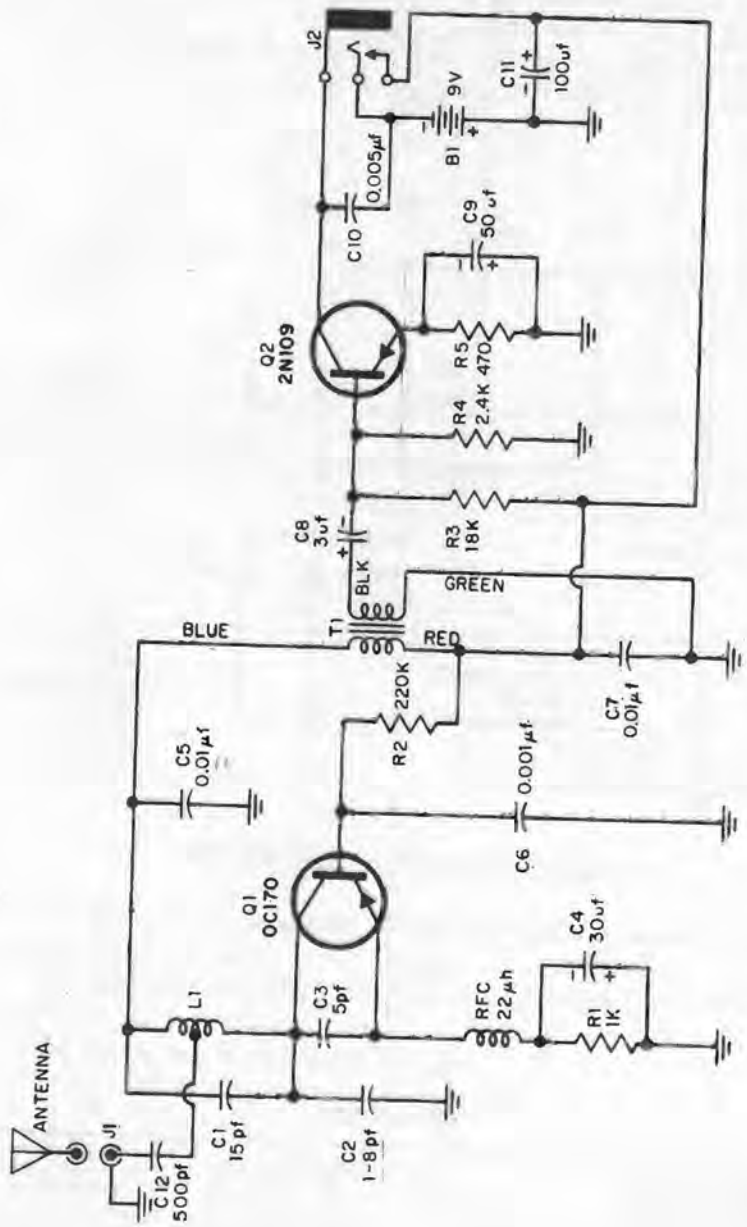

FIG. 42

42 CB Receiver

This small super-regenerative receiver will give surprisingly good results, and can be built on a perforated board and fit into a small metal box slightly larger than a cigarette package.

L1 is 16 turns of No. 22 enamel wire on a *North Hills* coil form No. F-1000. These forms are available from *Radio Shack,* 730 Commonwealth Ave., Boston, Mass.

Start off by tapping the coil at its approximate center. Then tap the coil a couple of turns either side of center to determine which tap position gives the best reception.

The transformer, T1, is a 20K primary, 1K secondary.

J1 is the socket for the antenna—it consists of an SO-239 coaxial connector receptacle. The antenna which fits into this a 3-ft., continuously loaded, 11-meter whip, such as the *Mark Products HELIWHIP* which comes with a PL-259 coaxial plug at its base.

PARTS LIST

Transistors	C6—0.001
Q1—OC170	C7—0.01
Q2—2N109	C8—3
Resistors (ohms)	C9—50
R1—1K	C10—0.005
R2—220K	C11—100
R3—18K	C12—500 pf
R4—2.4K	**Miscellaneous**
R5—470	L1—16 turns No. 22 enameled on North Hills form No. F-1000.
Capacitors (μf)	J1—antenna socket
C1—15 pf	J2—headphone jack
C2—1-8 pf	T1—20K primary, 1K secondary
C3—5 pf	Earphone—7K
C4—30	B1—9 volts
C5—0.01	

J2 is the headphone jack—it is a closed-circuit miniature with the contacts modified so that when the earphone (7K) is inserted, the contacts will be closed. The jack modified thusly will enable the receiver to be turned on and off by the insertion and extraction of the headset plug.

With the unit turned on, set the 1-8-pf trimmer to maximum capacitance (slug all the way in). Then adjust L1's slug until the signals are heard best. The adjustment of the 1-8-pf trimmer will then enable you to tune all of the CB channels.

43 High-to-Low-Impedance Mike Matcher

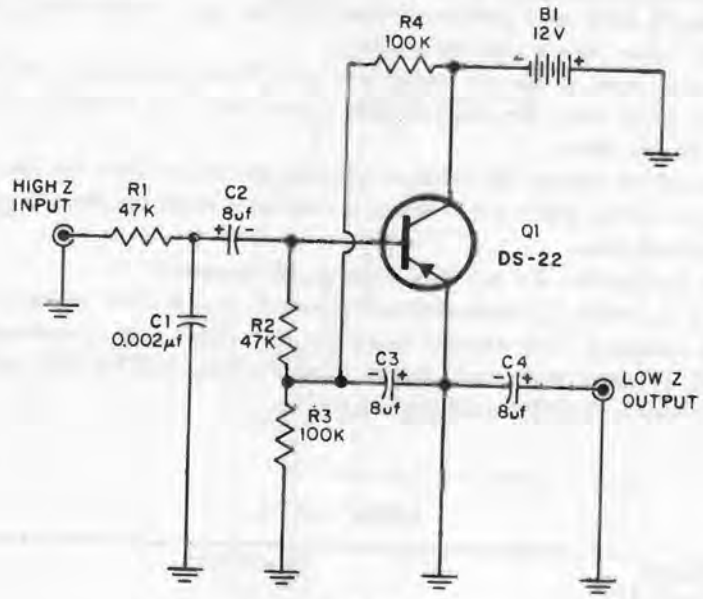

FIG. 43

This device enables you to match high-impedance microphones into low-impedance inputs.

Build the matcher into a metal case, hooking all ground leads to the case to prevent hum. Use shielded wire for hookup purposes.

PARTS LIST

Transistors	**Capacitors (μf)**
Q1—Delco DS-22	C1—0.002
Resistors (ohms)	C2, C3, C4—8
R1, R2—47K	**Miscellaneous**
R3, R4—100K	B1—12 volts

44 Clorox Powered Oscillator

This gadget is novel and will produce a steady audio tone as long as you have a supply of *Clorox* laundry bleach.

Construction is rapid. The only thing which might take a little time is finding the low-wattage, X844 power transistor. It is available from *Olson Radio,* 825 S. Forge St., Akron 8, Ohio.

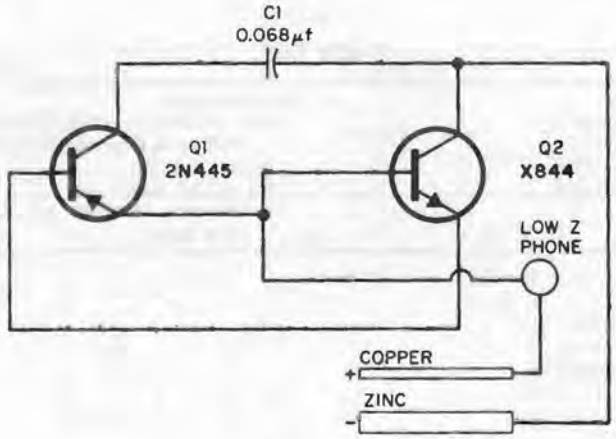

FIG. 44

The electrodes consist of a 3-in. strip of zinc and a 3-in. copper rod. These are hooked into the circuit and then emersed in a glass of *Clorox* laundry bleach. If a film develops on the electrodes, scrape it off with steel wool.

The audio tone generated can be changed by changing the value of the capacitor—the higher the value of the capacitor, the lower the frequency.

A low-impedance headphone should be used in the circuit.

PARTS LIST

Transistors	**Miscellaneous**
Q1—2N445	Electrodes: 3-in. strip of copper;
Q2—X844	3-in. strip of zinc.
Capacitors (μf)	**Clorox**
C1—0.068	Headphone—low impedance

45 Burglar Alarm

The circuit shown here is not the complete alarm—only the triggering system. You will be able to add a bell or buzzer to the circuit at the relay.

The relay is a 900-ohm, 24-volt d-c (*Potter & Brumfield* SM5DS) type.

The alarm wire can be either very thin wire like No. 40 or the aluminum strip tape which is used commercially for burglar-proofing windows and doors. Breaking the alarm wire throws the relay which, in turn, sets off the alarm.

PARTS LIST

Transistors
Q1—Power 12
Resistors (ohms)
R1, R2—560
R3, R4—10K

Miscellaneous
K1—900-ohm, 24-volt relay, (Potter & Brumfield SM5DS)
B1—1.5 volts
B2—22.5 volts
Alarm wire: No. 40 or aluminum strip tape

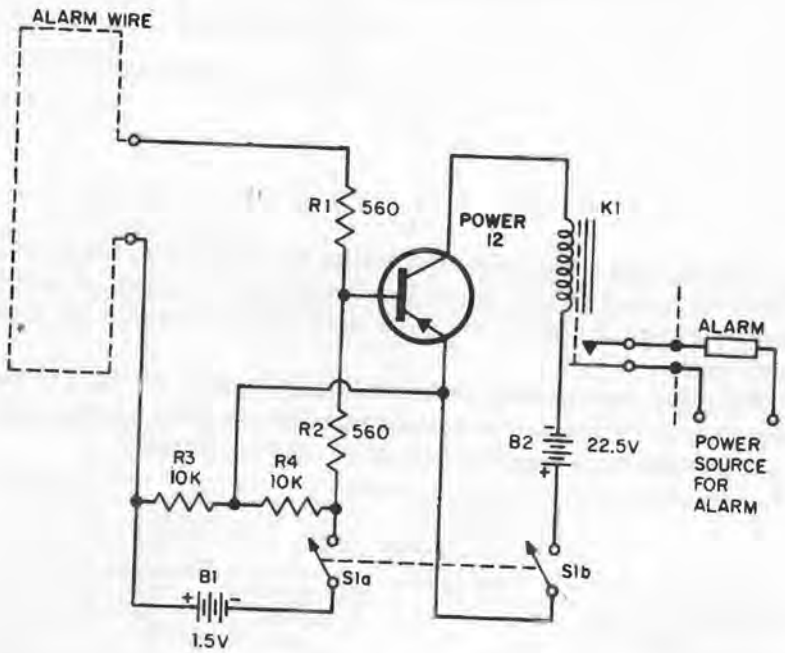

FIG. 45

46 Low-to-High-Impedance Mike Matcher

This device enables you to match low-impedance microphones into high-impedance inputs.

The transistor is a *Delco* DS-22, although any audio transistor should work.

Build the unit in a closed metal box, grounding all ground points to the box to prevent hum. Use shielded wire for hookup purposes.

PARTS LIST

Transistors
Q1—Delco DS-22
Resistors (ohms)
R1—510K
R2—100K
R3—10K

Capacitors (μf)
C1—25
C2—0.01
Miscellaneous
B1—3-12 volts

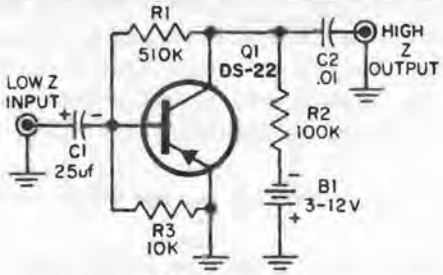

FIG.46

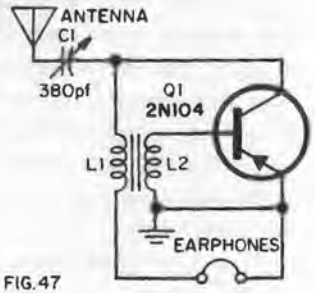

FIG.47

47 "No-Power" Receiver

Here's a receiver which requires no power supply, and it's *not* a crystal set.

The stations are tuned with the 380-pf variable capacitor in the antenna and are heard best over high-impedance magnetic headphones.

A long wire antenna will give good results, and the set should be grounded to a cold water pipe.

L1 is a vari-loopstick, L2 consists of 6 turns of No. 22 wire wound over the loopstick's coil. Experiment with L2's connections, the set might work better with them reversed.

PARTS LIST

Transistors
Q1—2N104
Capacitors (μf)
C1—380-pf var.

Miscellaneous
L1—vari-loopstick
L2—6 turns No. 22 wire on loopstick's coil
Antenna—see text
Earphones—see text

48 10-, 15-, 20-Meter DX Transmitter

This transmitter is capable of working DX halfway around the world when conditions are right on the 10-, 15-, and 20-meter ham bands.

The unit may be constructed on a metal chassis 3-in. x 4-in. x 6-in.

The coil for operation on the various bands must be hand made on 5-prong miniature coil forms. Coil L1 is set up for 10 meters as follows: 11 turns of No. 20 plastic-covered hookup wire tapped at 2-3/4 turns from the bottom. The top of the coil windings goes to pin 1 of the base, the bottom of the coil to pin 2, and the tap to pin 3. For 15 meters you can use the same pin connections on the form and the winding is 15 turns of wire tapped at 3-3/4 turns from the bottom. Twenty-meter operation is available by padding the 15-meter coil with a 30-pf disc ceramic capacitor between pin 1 and 2 of the form.

Coil L2 for 10 meters is 10 turns of No. 20 plastic-covered hookup wire with 3-3/4 turns of the same type wire wound in the same direction over the lower turns of the 10-turn coil. Pin connections are the same as above, plus the 3-3/4 turns are connected at one end to pin 4. 15-meter operation means 15 turns of No. 20 plastic-covered hookup wire with a 4-3/4-turn link. For 20 meters it will be necessary to connect a 30-pf disc ceramic across pins 1 and 2.

Twenty-meter operation also means shorting out the 50-pf variable capacitor in the antenna circuit.

Crystals are third overtone types, made for one-third the operating frequency—about 4.7 mc for 20 meters, 7 mc for 15 meters, and 9.5 mc for 10 meters.

The meter is a 0-10 milliampere job. S1 is DPDT toggle.

When you are ready to test the unit, place the key in the jack and press it several times. The meter should read 5 to 8 mils with switch S1 on OSC position. If the meter does not read between 5 and 8, adjust the 15-pf capacitor in the 2N247 circuit until it does.

PARTS LIST

Transistors
- Q1—2N247
- Q2—2N372

Resistors (ohms)
- R1—10K
- R2—180
- R3—3.6K
- R4—51K

Capacitors (μf)
- C1, C7—15-pf var.
- C2—10 pf
- C3, C4, C5, C6—0.001
- C8—50-pf var.

Miscellaneous
- Coil forms: (2), 5-prong miniature
- Wire: No. 20 plastic hookup
- L1, L2—see text
- J1—closed circ. key jack
- J2—phono type jack
- S1—DPDT toggle
- S2—SPST
- Milliammeter: 0-10 ma.
- Crystal: 3rd overtone type; see text
- B1—12 volts

48 10-, 15-, 20-Meter DX Transmitter

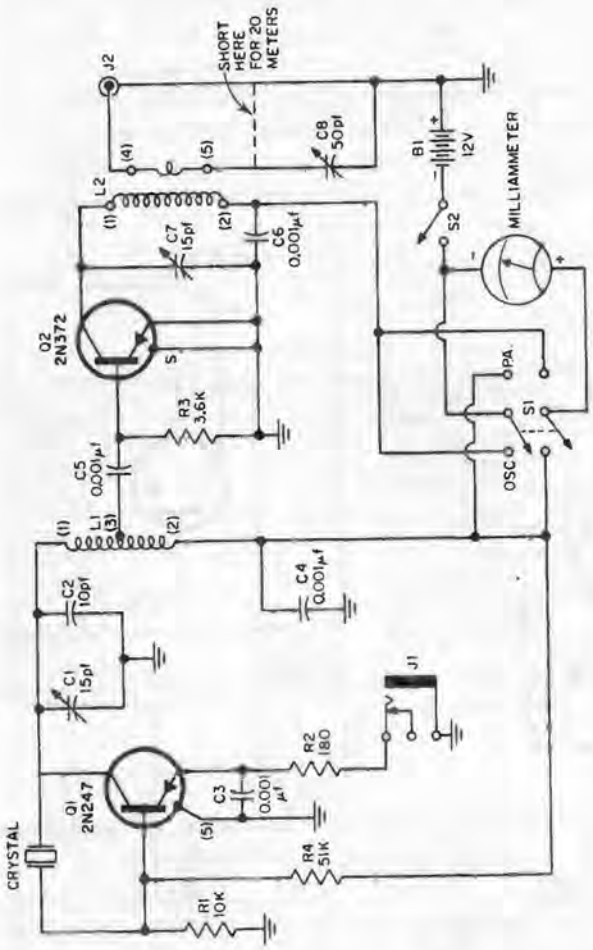

FIG.48

Next, switch to PA position. Adjust the 2N247's 15-pf variable so that the meter reads maximum.

With a No. 49 pilot bulb inserted across the antenna terminals, adjust the 50-pf antenna capacitor for minimum capacitance. Adjust the 15-pf capacitor across the emitter and collector of the 2N372 for a dip in the meter reading—about 4.5 mils.

Now, start increasing the capacitance of the antenna capacitor while dipping with the 2N372's 15-pf capacitor. The bulb should be bright.

You are now ready for QRP operation.

49 10-Meter Amateur Transceiver

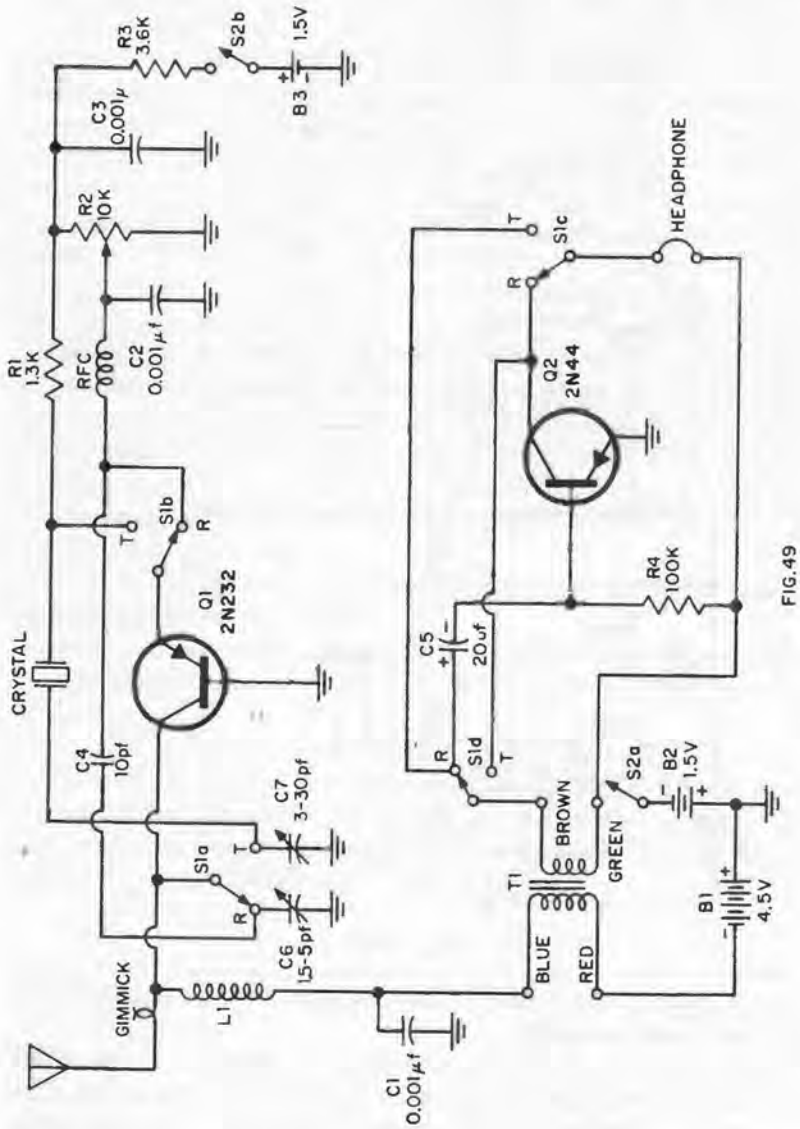

FIG. 49

49 10-Meter Amateur Transceiver

The 10-meter transceiver described here was designed to be housed in a small metal box. It has a regenerative receiver and a crystal-controlled modulated-oscillator transmitter.

The r-f choke is an *Ohmite* type Z-28, and the transformer is an interstage audio transformer. The capacitor which feeds the antenna is a "gimmick" consisting of enameled wire twisted together. The frequency of the transmitter can be varied, despite the fact that it is crystal controlled,

PARTS LIST

Transistors	C7—3-30-pf var.
Q1—2N232	**Miscellaneous**
Q2—2N44	L1—see text
Resistors (ohms)	Gimmick—see text
R1—1.3K	T1—interstage audio transformer
R2—10K pot.	S1—4PDT, lever
R3—3.6K	S2—DPST, toggle
R4—100K	Crystal: 3rd overtone
Capacitors (μf)	R-f choke: **Ohmite** Z-28
C1, C2, C3—0.001	Headphone: dynamic
C4—10 pf	B1—4.5 volts
C5—20	B2, B3—1.5 volts
C6—1.5-5-pf var.	

by the manipulation of the 3-30-pf variable capacitor. The 10K potentiometer is the regeneration control for the receiver. S1 is a lever action type having 4 poles. S2 is a DPST toggle. The coil, L1, is not fixed in definition; using a grid-dip oscillator, vary the number of turns and the size of L1 until it resonates with C6 and C7 at 10 meters.

If regeneration is bad—or does not exist at all—cut back on the number of turns in the gimmick.

50 Mobile Shortwave Converter

A shortwave converter will enable you to tune across your standard auto AM radio dial and hear radio stations in all parts of the world. This converter has the capability of tuning between 5 and 10 megacycles—which includes two shortwave broadcasting bands, a ham band, an aircraft band, and a marine band. It was designed to fit within a 5-in. x 2-1/4-in. x 2-1/4-in. metal box.

L1 and L2 are both broadcast band ferri-loopsticks. L3 is about 9 turns of No. 22 solid insulated hookup wire wound over L4 which is 22 turns of *B&W* No. 3016 prewound coil. The top of L4's winding goes to connection No. 3, the bottom to No. 5. A tap of 2-1/2 turns from the bottom of L4 goes to No. 4. The top of coil L3 goes to No. 1, the bottom to No. 2.

The entire frequency range of this converter cannot be covered on 1 crystal, you must use 5. Therefore, it would be more convenient to locate the crystal socket on top of the cabinet for easy access. To receive the frequencies listed in column A you will need the crystals shown in column B:

A	*B*
5000-6050 kc	4450 kc
6050-7100	5500
7100-8050	6450
8050-9100	7500
9100-10150	8550

S1 is a DPDT slide switch; it shifts the converter in and out of the circuit between the antenna and the AM radio.

L1 should be adjusted all the way in, and L2 all the way out for maximum rejection of interference from strong broadcast band stations.

PARTS LIST

Transistors
Q1—2N274
Resistors (ohms)
R1—360K
Capacitors (μf)
C1—500 pf
C2, C3—100 pf
C4, C5—0.001
C6—100

Miscellaneous
L1, L2—broadcast band ferri-loopstick
L3—9 turns No. 22 insulated hookup over L4
L4—22 turns of B & W No. 3016
Crystal—see text
S1—DPDT, slide
S2—SPST
B1—3 volts

50 Mobile Shortwave Converter

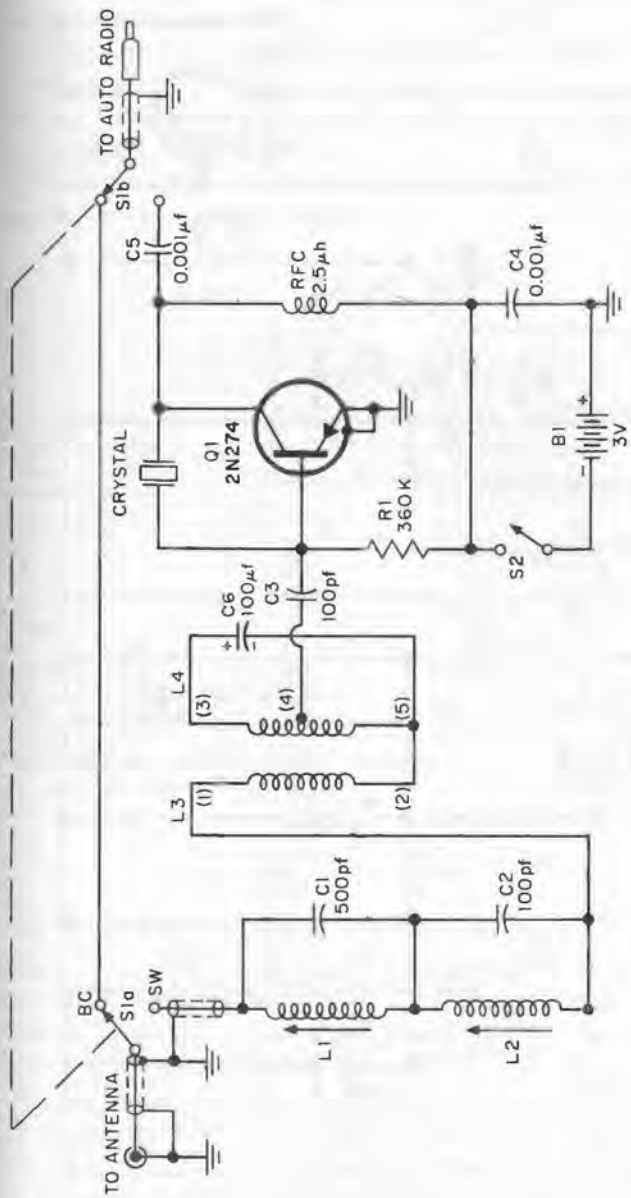

FIG. 50

51 "DX Special" AM Receiver

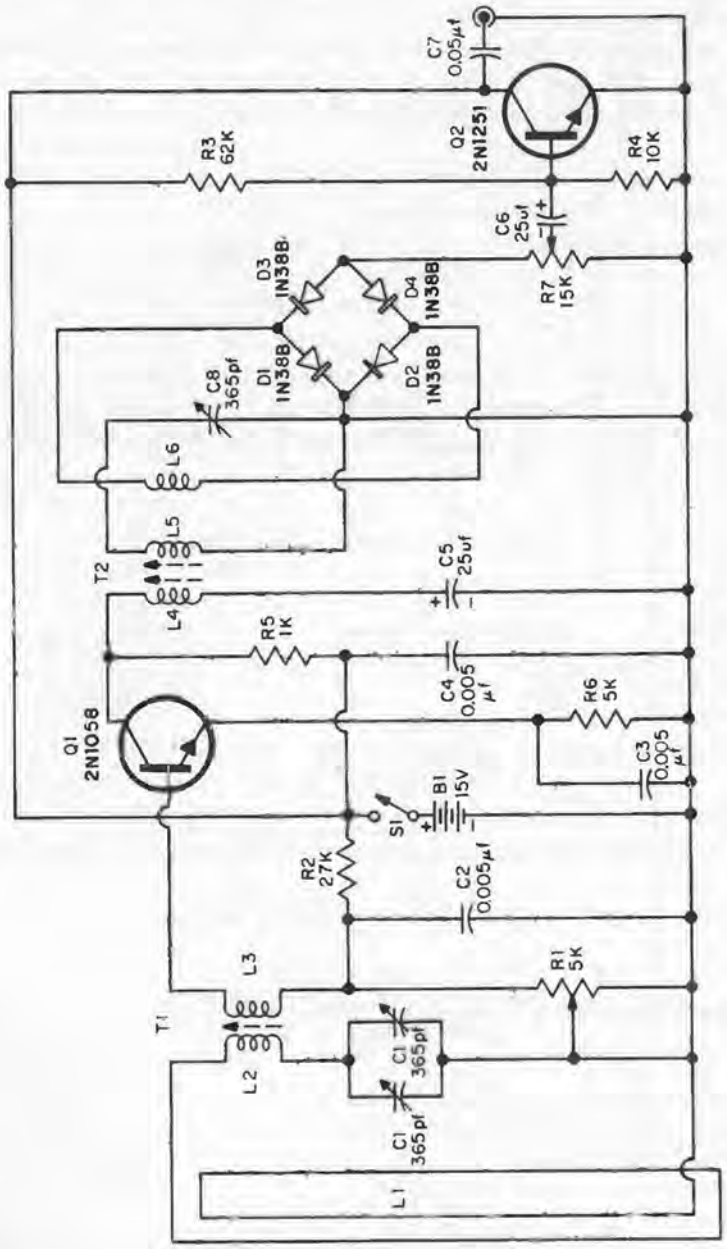

FIG. 50

51 "DX Special" AM Receiver

Not too many 2-transistor receivers can be classified as candidates for DX'ing—this one can.

C1 is a dual 365-pf variable tuning capacitor; other than that, all components except for the coils are uninvolved.

L1 is 3 turns of hookup wire wound around a 2-in. x 3-in. piece of cardboard; this serves as the antenna.

T1 is made up of 2 coils. The first, L2, is a ferrite loopstick. L3 is 1 turn of litz wire over the loopstick.

PARTS LIST

Transistors
- Q1—2N1058
- Q2—2N1251

Resistors (ohms)
- R1—5K pot.
- R2—27K
- R3—62K
- R4—10K
- R5—1K
- R6—5K
- R7—15K pot.

Capacitors (µf)
- C1—dual 365-pf var.
- C2, C3, C4—0.005
- C5, C6—25
- C7—0.05
- C8—365-pf var.

Miscellaneous
- L1—3 turns hookup around cardboard
- L2, L4, L5—ferrite loopstick
- L3—1 turn of litz over loopstick L2
- L6—1 turn of litz over loopstick L5
- T1—L2 and L3
- T2—L4 and L5
- D1, D2, D3, D4—1N38B
- B1—15 volts

T2 is two ferrite loopsticks (L4 and L5) laid out end-to-end in a straight line, with the coils towards the center. L6 is a single layer of litz wire over L5's paper sleeve.

Mount T1 and T2 at right angles to each other and keep the input and output circuits of the receiver separated.

Tuning across the band is accomplished by manipulating C1 and the 365-pf capacitor, C8. The 5K potentiometer is the volume control. Reception can be with a 4K to 10K magnetic headset or with high-impedance crystal earphones—or the unit can be used as a tuner to be fed into an amplifier.

52 Two-Watt Modulator

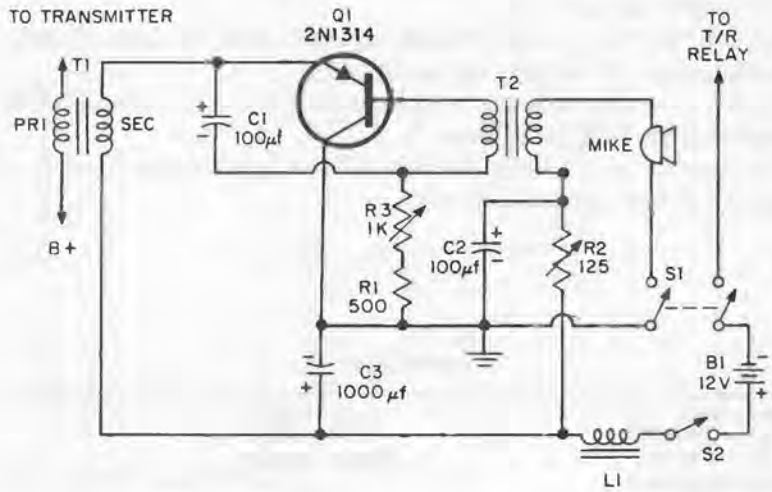

FIG 52

Used to modulate low-power (under 5 watts) transmitters, this little modulator has many applications for hams and CB'ers.

T1 is a 6.3-volt, 0.6-amp filament transformer. T2 is a *Thordarson* 21F27 type. L1 is a *Miller* No. 7825 hash filter.

The transistor must be mounted to insure heat dissipation. For this reason, house the modulator in a metal container with the transistor mounted on the exterior. The 1K potentiometer controls the bias, the 125-ohm potentiometer controls the microphone current.

Use a carbon mike. Switch S1 is a pushbutton DPST which is connected to the T/R relay.

PARTS LIST

Transistors	**Miscellaneous**
Q1—2N1314	T1—6.3 volt, 0.6 amp filament
Resistors (ohms)	T2—Thordarson 21F27
R1—500	L1—Miller No. 7825 hash filter
R2—125 pot.	S1—DPST pushbutton
R3—1K pot.	S2—SPST
Capacitors (μf)	B1—12 volts
C1, C2—100	Microphone: carbon
C3—1000	

53 Receiver With Push-Pull Amplification and Detection

This interesting circuit is rather unique in that it uses a bridge type detector which provides a push-pull output signal which, in turn, drives a push-pull amplifier circuit.

L1 is a ferri-loopstick. The transformer is an *Argonne* AR-170, which drives any size PM speaker (larger ones give good results).

The antenna should be a long wire, and best results will be obtained when the unit is connected to a good ground such as a cold water pipe.

PARTS LIST

Transistors	**Miscellaneous**
Q1, Q2—2N104	L1—ferri-loopstick
Resistors (ohms)	T1—Argonne AR-170
R1, R2—220K	D1, D2, D3, D4—1N38B
Capacitors (μf)	S1—SPST
C1—365-pf var.	Antenna—long wire
C2, C3—50	Speaker
	B1—4.5 volts

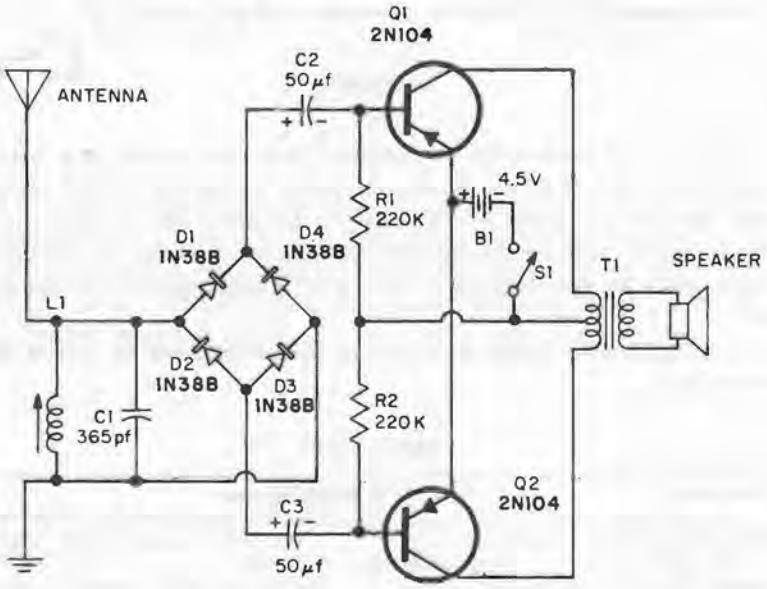

FIG. 53

54 Sun Powered 40-Meter Transmitter

This rig should give you a several thousand-feet range on a sunny day or near a 40-watt bulb.

The unit may be built on a 2-1/4-in. x 4-1/2-in. x 2-1/2-in. metal box. Construction is a straightforward—mount the crystal, transistor, antenna terminal and coil at one end of the chassis and the solar cells at the other. Keep excessive heat away from the solar cells because high heat can damage them, and they work better at lower temperatures anyway. The solar cells are manufactured by the *International Rectifier Corp.;* types B2M.

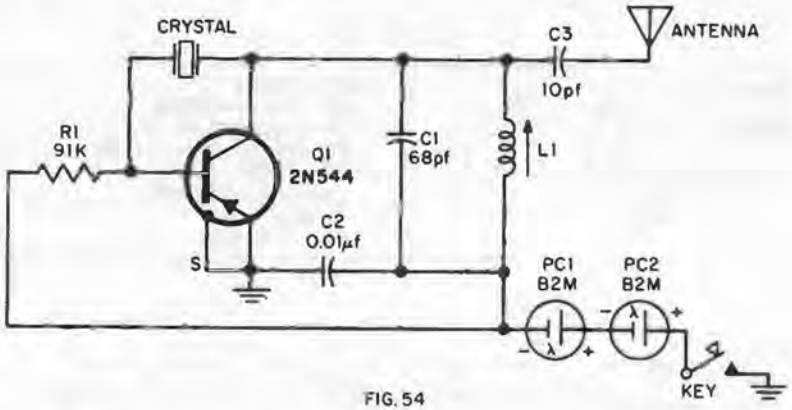

FIG. 54

Coil L1 is 25 turns of No. 26 enameled wire close wound on a 3/8-in. slug-tuned form. With the transmitter power turned on, the key closed, and your receiver tuned to the operating frequency of the crystal, you should hear a clear note coming from the receiver. Peak the coil for maximum output on your S-meter, or use a field strength meter to accomplish this.

A valid Amateur license of the proper class is necessary to operate this transmitter.

PARTS LIST

Transistors	**Miscellaneous**
Q1—2N544	L1—25 turns No. 26 enameled on 3/8-in. slug-tuned form
Resistors (ohms)	Antenna
R1—91K	Crystal: 40-meter band
Capacitors (μf)	PC1, PC2—B2M
C1—68 pf	Key
C2—0.01	
C3—10 pf	

55 AM Radio Booster

If your small AM radio does not seem to be able to bring in distant stations clearly, or if your BCB DX receiver can use a little more "zip," this circuit should be immediately put to use.

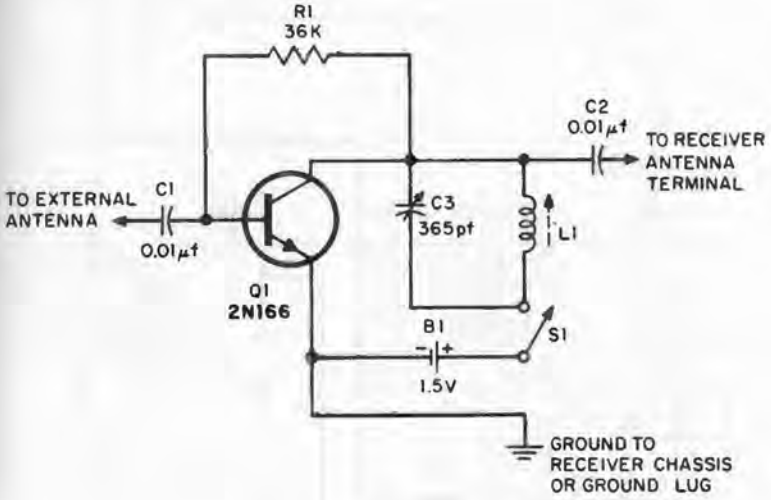

FIG. 55

L1 is a regular ferri-loopstick. The unit can be built in a small plastic box and mounted in the rear of the receiver cabinet. The loopstick and the 365-pf capacitor should be peaked to the center of the band for regular listening (1080 kc) or to any particular frequency you wish to bring in better than the others.

PARTS LIST

Transistors	C3—365-pf var.
Q1—2N166	**Miscellaneous**
Resistors (ohms)	L1—ferri-loopstick
R1—36K	S1—SPST
Capacitors (μf)	B1—1.5 volts
C1, C2—0.01	

56 Six-Meter Converter

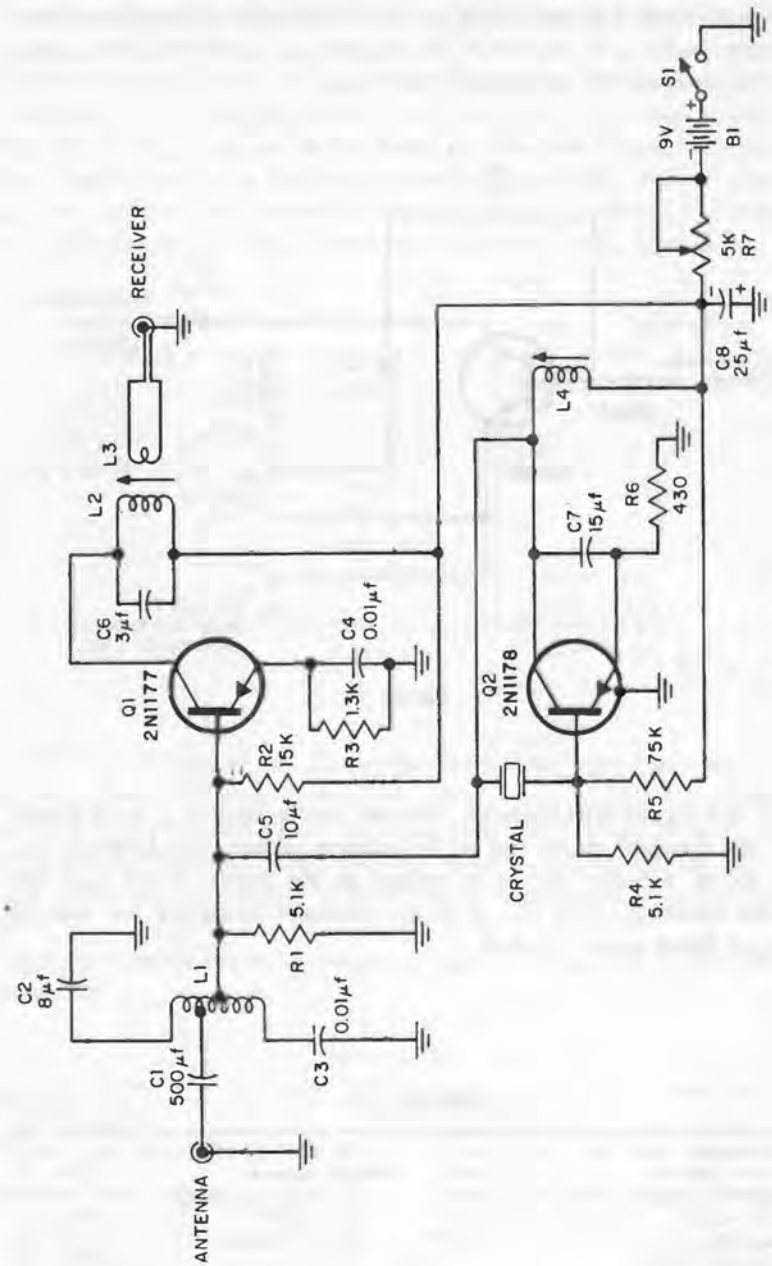

FIG 56

56 Six-Meter Converter

This converter can be constructed on a 2-in. x 3-12-in. piece of perforated board.

L1 is 12 turns of No. 28 enameled wire on a 3/16-in. diameter form. The tap to the base of the 2N1177 should be at 3 turns, the tap to the antenna should be at 6 turns.

L2 is 50 turns of litz wire closewound on a 3/16-in. diameter form, slug tuned.

PARTS LIST

Transistors	C6—3
Q1—2N1177	C7—15
Q2—2N1178	C8—25
Resistors (ohms)	Miscellaneous
R1, R4—5.1K	L1—12 turns No. 28 enameled on 3/16-in. D. form
R2—15K	L2—50 turns litz wire on 3/16-in. D. slug-tuned form
R3—1.3K	L3—1 turn light hookup around center of L2
R5—75K	L4—10 turns No. 28 enameled on 3/16-in. D. slug-tuned form
R6—430	Crystal: 42-mc overtone
R7—5K pot.	S1—SPST
Capacitors (μf)	B1—9 volts
C1—500	
C2—8	
C3, C4—0.01	
C5—10	

L3 is 1 turn of light hookup wire around the center of L2.

L4 is 10 turns of No. 28 enameled wire on a 3/16-in. slug tuned coil form.

The crystal should be a 42-mc overtone type. Output will be at 7 mc.

To tune up the converter, turn it on and have a handy 50-mc signal generator nearby. Peak up the unit by using the two coil slugs and the 5K potentiometer at the power input.

57 75-Meter Converter

There's nothing difficult about this converter which places the 75-meter ham band square in the middle of your broadcast band radio.

The crystal which determines the output of the converter should be a 3200-kc type so that the band will appear at about 600 kc through 800 kc.

L1 consists of No. 30 enameled wire wound 40 turns on a 1/4-in. slug tuned form. Over this wrap 5 turns closewound on the ground end. Use a grid-dipper to tune it to 3.9 mc. The tap is at 10 turns up from the ground side of the coil.

L2 is wound the same as L1 except there is no need to link the additional 5 turns over it. Tap it at 10 and 20 turns from the cold end. Resonate at 3900 kc.

PARTS LIST

Transistors
- Q1—2N1684
- Q2—2N247
- Q3—CK768

Resistors (ohms)
- R1—470K
- R2—4.7K
- R3—22K
- R4, R5—1K
- R6—5.1K

Capacitors (μf)
- C1, C2, C3—25-280-pf var.
- C4—0.002
- C5, C6—100 pf
- C7—360 pf
- C8—0.01

Miscellaneous
- L1—40 turns No. 30 enameled on 1/4-in. slug-tuned form
- L2—see text
- L3—72 turns No. 30 enameled on 1/2-in. D. slug-tuned form
- L4—J. W. Miller 4514
- S1—3PDT, Switchcraft 3009L
- Neon bulb: NE-2
- Crystal: 3200 kc
- B1—9 volts

L3 is 72 turns of No. 30 enameled wire on a 1/2-in. diameter slug-tuned form, with a link consisting of 5 turns on the cold end. Resonate at 3200 kc.

L4 is a *J. W. Miller* 4514 with a 10-turn link on the cold end. Resonate at 700 kc.

S1 is a *Switchcraft* 3009L.

The neon bulb is not for ornamental purposes. It is to give some degree of protection against r-f damaging the 2N247.

57 75-Meter Converter

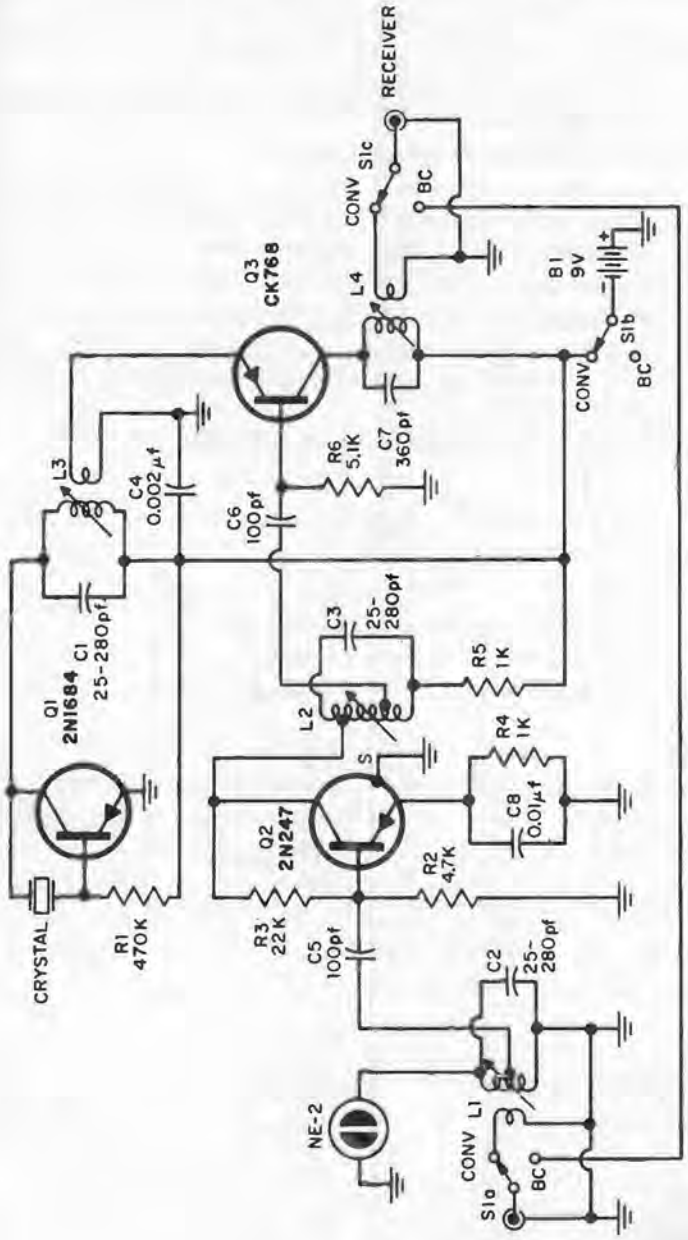

FIG. 57

58 Six-Meter Tunnel-Diode Transmitter

Here's an interesting application of the tunnel diode in a 6-meter band ham transmitter. This tiny transmitter is powered by a 1.35-volt mercury battery and the tunnel diode is a gallium arsenide type.

Construction is easily accomplished on a small vector board, keeping the leads as short as possible.

The crystal is a 26-mc third overtone type.

L1 is 4 turns of No. 16 copper wire spaced to 5/8-in. and wound 5/8-in. in diameter. L2 is the means by which the transmitter is coupled to the antenna. It consists of a 1- or 2-turn link.

To check out the transmitter, tune your receiver to the spot in the 6-meter band for which the crystal was designed. With a VOM connected across the 100K potentiometer and the potentiometer set at maximum

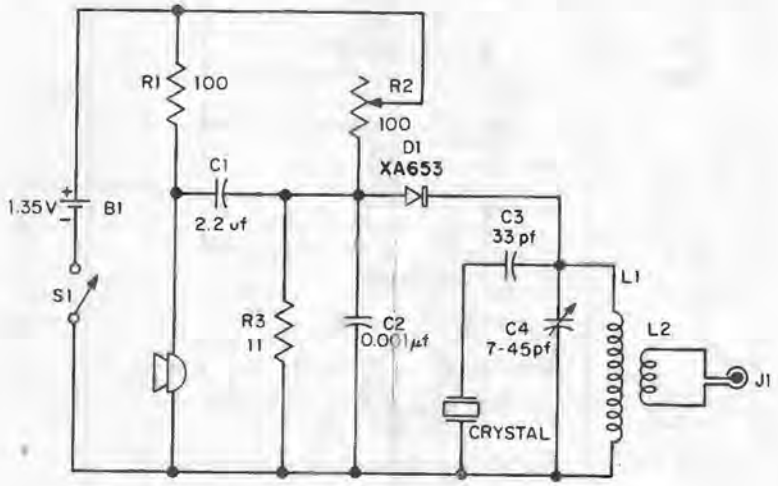

FIG. 58

PARTS LIST

Resistors (ohms)	**Miscellaneous**
R1—100	L1—4 turns No. 16 copper wire spaced to 5/8-in. and wound on 5/8-in. D.
R2—100K pot.	L2—1 or 2 turns of No. 16
R3—11	Crystal: 26-mc 3rd overtone
Capacitors (µf)	D1—XA653, tunnel
C1—2.2	B1—1.35 volts
C2—0.001	Microphone: carbon
C3—33 pf	S1—SPST
C4—7-45-pf var.	

58 Six-Meter Tunnel-Diode Transmitter

resistance, apply power to the unit and slowly advance the potentiometer. The operating point should be reached at about 0.2 volts.

At a bias voltage of about 0.17 volts, you will note a slight upsurge of voltage. At this point, you should notice that your signal has become audible in your receiver. The diode is properly adjusted when it stops breaking in and out of oscillation. At this point, place a shaft lock on the potentiometer.

The 7-45-pf variable capacitor will enable you to adjust the circuit for maximum output. It will also have to be adjusted as you perform the VOM tests for oscillation of the tunnel diode.

By the way, the tunnel diode is connected with the anode towards the positive terminal of the battery.

A carbon microphone should give good modulation.

59 Current Reverser

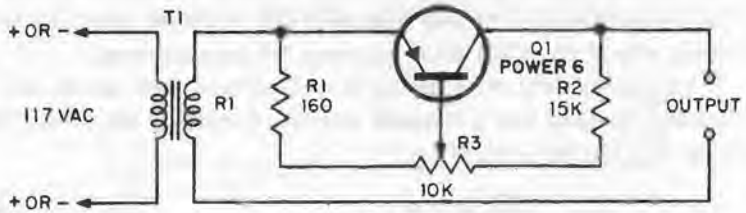

FIG. 59

This is an interesting experiment in electrical polarity. The device puts out a few volts of pulsating dc and you can reverse the polarity of the circuit, resulting in changing the operation of anything which is being powered by the device. For instance, if you connect a 1.5-volt d-c motor to the output of the reverser, it will run in one direction. By rotating the potentiometer slowly, the motor will slow down, then stop, slowly start up in the opposite direction, increasing in speed as you go. The center of the potentiometer is zero volts.

The transformer, T1, is a *Stancor* P6134.

The unit can also be used as a dimmer for small bulbs and other lighting devices.

PARTS LIST

Transistors	R2—15K
Q1—Power 6	R3—10K pot.
Resistors (ohms)	**Miscellaneous**
R1—160	T1—Stancor P6134

60 Eighty-Meter Tunnel-Diode Transmitter

Here's an opportunity to get on the air with a tubeless, transistorless transmitter. This is accomplished by means of a tunnel diode, the 1N2941. This unit won't give you much in the way of DX, but it will give you an opportunity to experiment with this interesting device.

The unit can be built in a 1-5/8-in. x 2-3/4-in. x 2-1/8-in. metal box. L1 is 18 turns of No. 30 enameled wire, close wound on a 3/8-in. slug-tuned form. T1 is a 6.3-volt filament transformer.

When the unit is wired, connect a milliammeter (between 5 and 15 mils fullscale) to J1 with the positive side of the meter at the ground side of the plug. Turn the 5-ohm potentiometer to the minimum setting—the meter should read a little more than 0.01 mil. When the potentiometer is opened up, the current will increase. When the meter stops rising and drops, you have reached the oscillation limits of the diode. The potentiometer should be left about midway between the point where you started and the drop-off point.

If you have trouble getting the tunnel diode to oscillate, hold one lead from a small capacitor in your bare hand and touch the other lead to the cathode side of the diode while adjusting the potentiometer.

If your unit checks out thus far, wrap 5 turns of wire around the coil, extending one end into a resonant antenna, grounding the other. You're on the air! The key goes in J1.

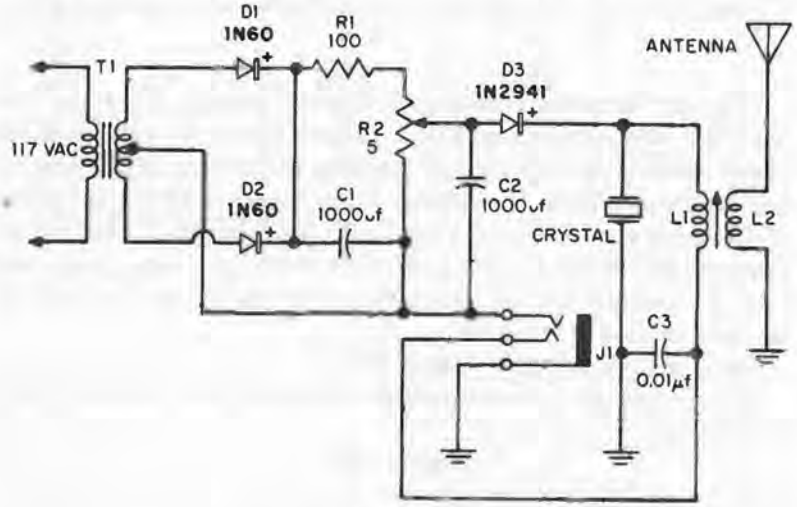

FIG. 60

60 Eighty-Meter Tunnel-Diode Transmitter

PARTS LIST

Resistors (ohms)
R1—100
R2—5 pot.
Capacitors (µf)
C1, C2—1000
C3—0.01
Miscellaneous
L1—18 turns No. 30 enameled on 3/8-in. slug-tuned form
L2—5 turns No. 30 enameled around L1
T1—6.3-volt filament transformer
D1, D2—1N60
D3—1N2941, tunnel
Crystal—80 or 40 meter fundamental

61 World's Smallest Transmitter?

This is a real low-power "spy" type transmitter which can be used at transmitter hunts when you are not engaged in spying activities.

Designed for operation on a relatively wide range of frequencies, operation on 80 meters is simple with a 17-in. whip antenna doing the honors.

The 1-meg potentiometer controls the bias to the transistor; it may be omitted from the circuit, but will often improve operation of the transmitter.

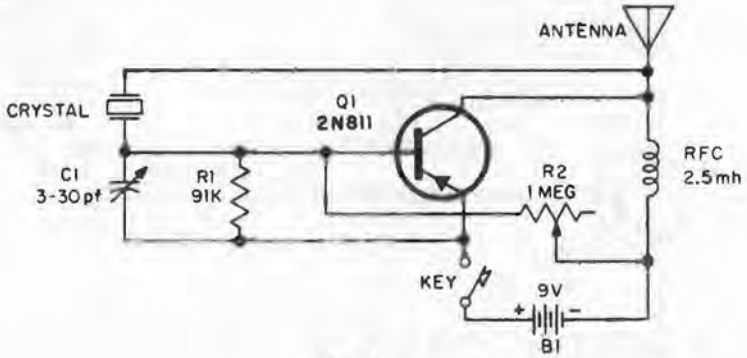

FIG. 61

PARTS LIST

Transistors
Q1—2N811
Resistors (ohms)
R1—91K
R2—1Meg pot.
Capacitors
C1—3-30-pf var.
Miscellaneous
R-f choke: 2.5 mh
Key
B1—9 volts
Antenna: 17-in.

62 Twenty-Meter Fone/CW Transmitter

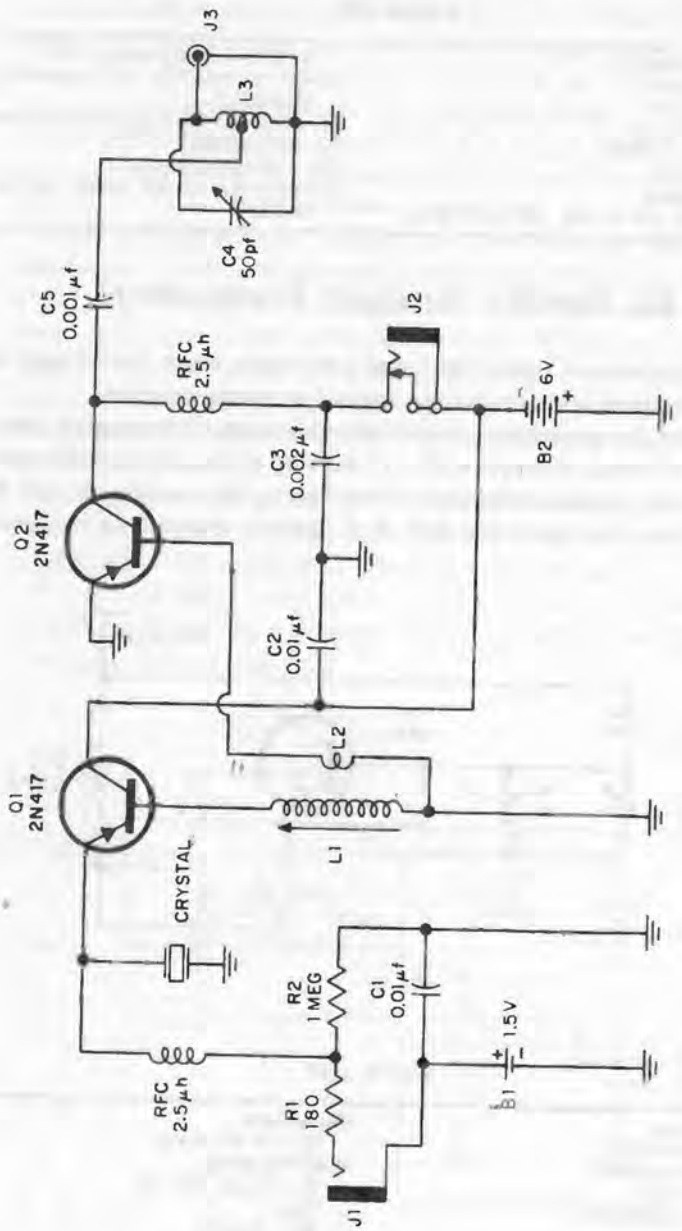

FIG. 62

62 Twenty-Meter Fone/CW Transmitter

This little rig can be fitted into a 5-in. x 2-1/4-in. x 2-1/4-in. box. With it you can have a go at what some (in fact *most*) hams call impossible, low power on 20 meters.

L1 is 38 turns of No. 22 enameled wire closewound on a 1/2-in. diameter slug-tuned form. L2 is 8 turns of No. 22 enameled wire wound over the ground end of L1. L3 is 17 turns of *B&W Miniductor* No. 3011 tapped 5-1/2 turns from the ground side.

J1 is the key jack; it is an open circuit type. J2 is the mike jack which takes a carbon mike. J3 takes an antenna resonant at 20 meters. The crystal is cut for 7 mc.

PARTS LIST

Transistors	L2—8 turns No. 22 enameled over ground end of L1
Q1, Q2—2N417	L3—17 turns of **B & W Miniductor** No. 3011 tapped 5-1/2 turns from ground side
Resistors (ohms)	RFC—(2) 2.5 μh
R1—180	Crystal: 7 mc
R2—1Meg	J1—key jack
Capacitors (μf)	J2—mike jack
C1, C2—0.01	J3—antenna jack
C3—0.002	B1—1.5 volts
C4—50-pf var.	B2—6 volts
C5—0.001	
Miscellaneous	
L1—38 turns No. 22 enameled on 1/2-in. D. slug-tuned form	

Using a field strength meter, adjust the slug in L1 for maximum output at 7 mc. Using a milliammeter, check the collector lead from the final; it should read a maximum of 12 to 15 ma with L2 adjusted.

The 50-pf capacitor in the final should now be adjusted for maximum 20-meter output.

To find the correct tap location at L3, move the tap to several points and check for maximum 20-meter signal output with a field strength meter.

63 Experimenter's Power Supply

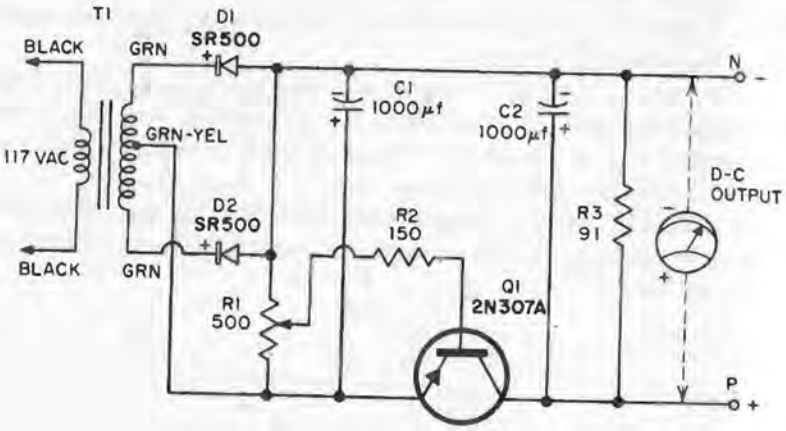

FIG.63

This is more or less a battery eliminator to give your transistor circuits a little versatility and to save you the trouble of working with batteries of various sizes and shapes. It will deliver zero to 12 volts dc at half an amp.

The unit can be constructed in a small metal box with the transistor mounted on the box as a heat sink. Be careful to use a power transistor insulating socket so that the 2N307A does not ground to the chassis.

The SR500 is a *Sylvania* silicone diode rectifier. The transformer is a *Thordarson* 21F27. An optional safety device—a d-c voltmeter connected across the unit's output to let you know what's coming out.

To test the unit, turn it on with the 500-ohm potentiometer in its minimum position, and the desired load across the terminals *N* and *P*. Slowly increase the potentiometer until the device is powered and operative. It will undoubtedly find many uses in the experimenter's lab.

PARTS LIST

Transistors	**Capacitors (μf)**
Q1—2N307A	C1, C2—1000
Resistors (ohms)	**Miscellaneous**
R1—500 pot.	T1—Thordarson 21F27
R2—150	D1, D2—SR500
R3—91	

64 Headset Booster

If you have used magnetic earphones, you have probably wondered what could be done to pep them up, or completely replace them. Here's the answer—for a small sum and very little effort you can build a booster which will substantially increase the sensitivity of the magnetic headset. This unit is to be constructed in a small metal box.

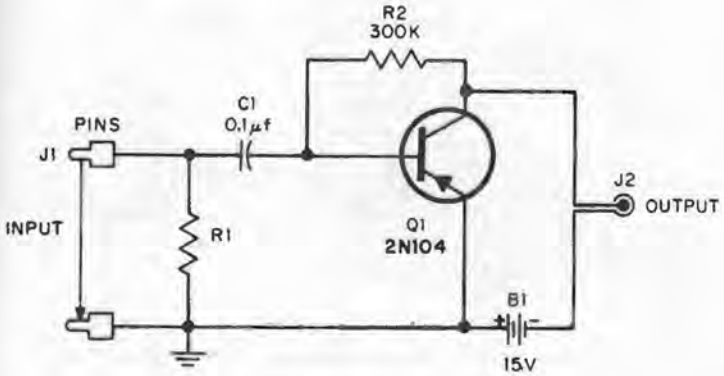

FIG. 64

Resistor R1 will vary depending upon the receiver and the output impedance of the receiver with which it will be used. Typical values are: vacuum tube sets—100K, crystal sets—47K, transistor sets—470 ohms.

The set turns on and off as the earphones are inserted into J2. This means that when you wire the unit, the battery should be hooked up last and when you use it, the earphones should be removed from the unit at the end of usage. The earphones used with the booster can be anywhere from 500 to 6K ohms.

PARTS LIST

Transistors	**Capacitors (μf)**
Q1—2N104	C1—0.1
Resistors (ohms)	**Miscellaneous**
R1—see text	B1—15 volts
R2—300K	

65 VHF Receiver

This complete VHF receiver will tune about 85 through 146 mc, covering the top portion of the FM broadcast band, the aeronautical band and a portion of the 2-meter ham band. It can be easily constructed in a small plastic box.

Coil L1 is 4 turns of No. 16 tinned wire on a 3/4-in. diameter, spaced to 1/2-in. The antenna is a 15-in. length of stiff wire.

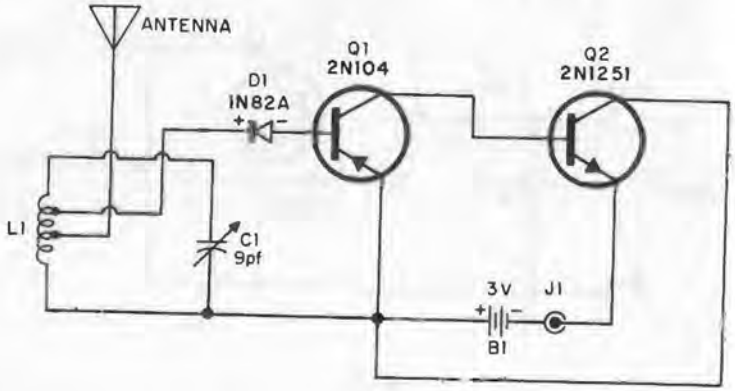

FIG.65

The antenna tap off on the coil is 1/2 turn from the end of the coil which is attached to the rotor of the 9-pf capacitor. The tap off for the diode is at two turns up from the "rotor" end of the coil. The 9-pf capacitor will allow you to tune across the band.

The unit is made for use with a 2K headset at J1.

If you wish to test the unit, the coil should grid dip at about 100 mc.

PARTS LIST

Transistors	**Miscellaneous**
Q1—2N104	L1—4 turns No. 16 tinned on 3/4-in. D.
Q2—2N1251	D1—1N82A
Capacitors	B1—3 volts
C1—9-pf var.	

66 Fish Attractor

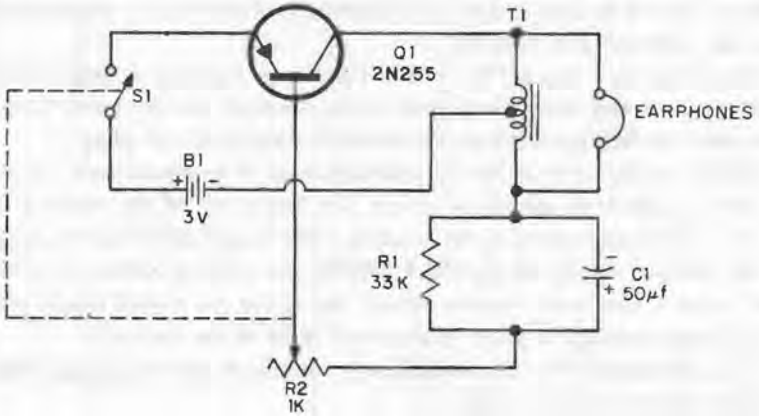

FIG.66

This is a bit on the sneaky side, we'll admit. However, the beeping sound this gadget generates creates all kinds of curiosity in fish circles, attracting them like the pied piper. Should your trusty hook and bait be in the immediate area of the device, you might even catch a few!

The unit is built on a vector board small enough to fit inside of a waterproof jar. Construction is not critical.

The transformer is a *Lafayette* TR-99—the leads from the secondary are not used.

The earphone is a *Lafayette* MS-439, hi-Z crystal.

You can control the rate of pulses by varying the 1K potentiometer, which, by the way, also contains the on-off switch for the device.

To weight the jar so that it sinks, place some weights or stones in a plastic bag, squeezing all the air out of the bag. Place the bag carefully in the jar. Don't forget to tie a string to the jar so you can use it another day.

PARTS LIST

Transistors	**Capacitors (μf)**
Q1—2N255	C1—50
Resistors (ohms)	**Miscellaneous**
R1—33K	T1—Lafayette TR-99
R2—1K pot. with switch S1	Earphone—Lafayette MS-439
	S1—part of R2
	B1—3 volts

67 Baby Sitter/Pager

The Baby Sitter/Pager enables you to monitor any room in your house, office or factory by means of a carrier-current (*wired wireless*) transmitter and any standard AM receiver.

The transmitter uses a PM speaker (miniature permanent magnet) as a microphone and sends the signals to the receiver via the power lines. The power is fed into the lines by means of a standard wall plug.

Coil L1 is 600 turns of No. 25 enameled wire close wound on a 1-3/4-in. No. 8 brass bolt, spaced to 3/4-in. The beginning of the winding is point *1*. The center point of the winding (300 turns) should have a loop in the wire for the tap off the coil. Complete the winding, calling the final turn point *2*. Cardboard washers at each end of the coil should enable you to hold the windings in place (make small holes in the washers).

L2 is 20 turns of No. 25 enameled wire wound on top of L1. The ends of this coil are points *3* and *4*.

There is nothing much more to the transmitter than this.

PARTS LIST

Transistors
- Q1—2N1097

Resistors (ohms)
- R1—430
- R2—5K pot. with switch S1
- R3—470K pot.
- R4—10K

Capacitors (μf)
- C1, C2—0.0015
- C3—50
- C4, C5—0.003
- C6—0.01

Miscellaneous
- L1—600 turns No. 25 enameled on 1-3/4-in. No. 8 brass bolt
- L2—20 turns No. 25 enameled on L1
- L3—70 turns No. 20 plastic covered hookup on 1-in. form
- Speaker: miniature PM
- S1—part of R2
- B1—1.5 volts

On the receiving end, the "receiver coil" must be constructed to enable you to convert a household radio into a carrier-current pickup unit.

L3 is 70 turns of No. 20 plastic-covered hookup wire on a 1-in. form, spaced out to 5-in. in length. The coil is then placed on the back of the AM receiver.

To check for proper operation, turn on both units, with the receiver tuned to the bottom of the band. Begin talking into the transmitter while you tune up the receiver band. When you hear your voice, you're all set to go. You can then place the transmitter in any room of the house.

67 Baby Sitter/Pager

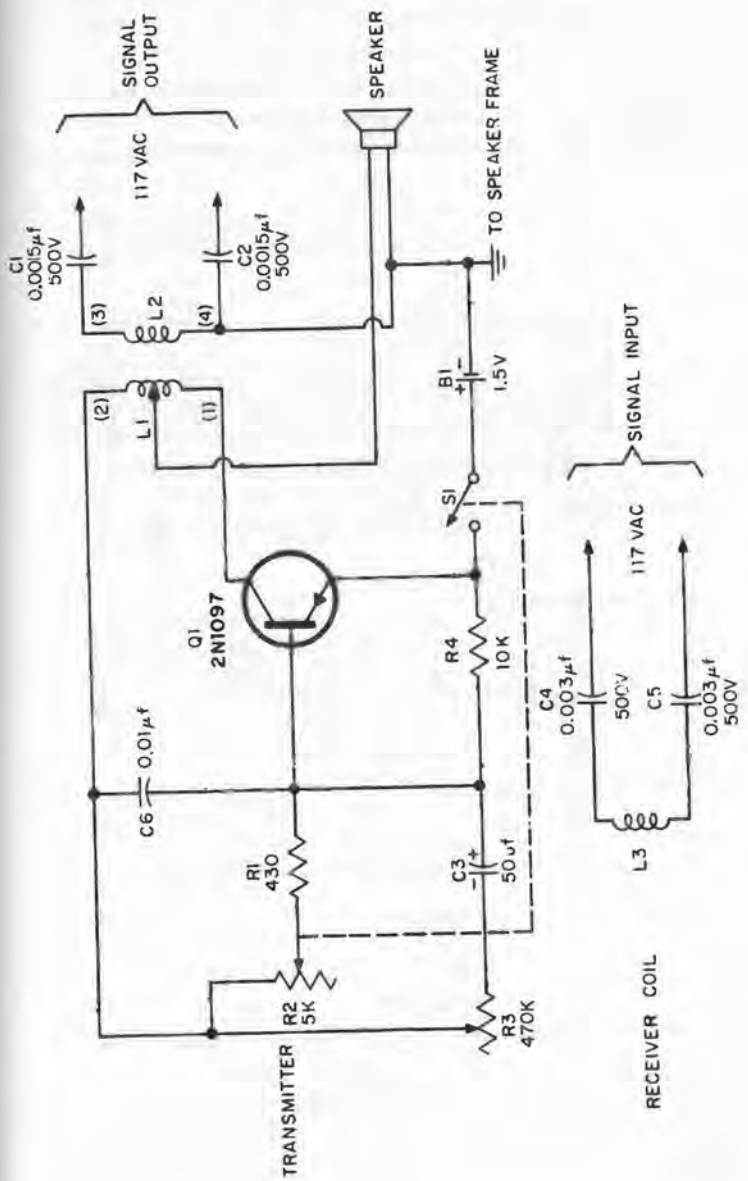

FIG. 67

68 400-Microwatt Broadcast Transmitter

Here's a unit which is one of the types used for "campus radio stations" at many colleges. It operates under the FCC's Part 15 Rules and Regulations covering low-powered radiation devices.

The unit is designed to be constructed in a metal box 3-1/4-in. x 2-1/8-in. x 1-5/8-in. with a punched board for a chassis.

Coil L1 is a *Miller* No. 2002, as is L3. L2 is 8 turns of No. 22 enameled

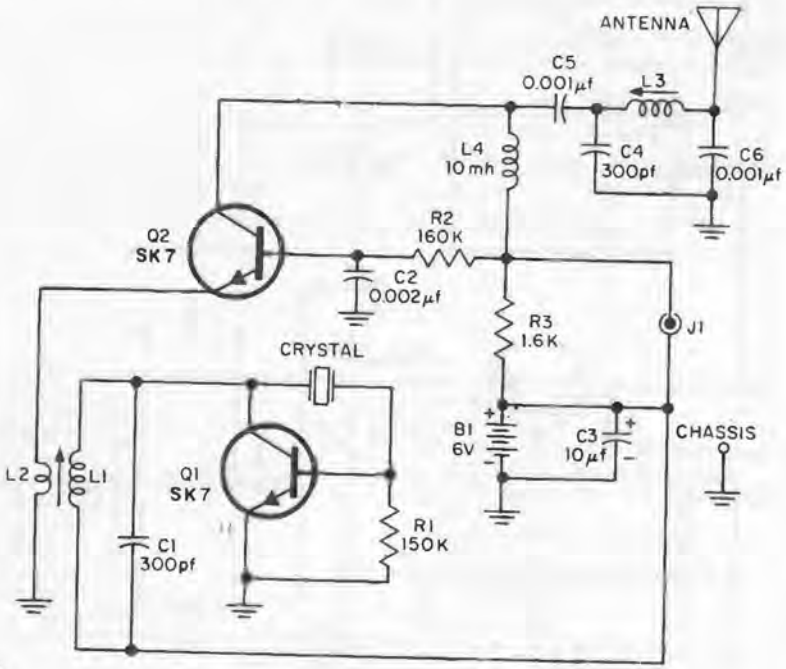

FIG.68

PARTS LIST

Transistors	C3—10
Q1, Q2—SK7	C5, C6—0.001
Resistors (ohms)	**Miscellaneous**
R1—150K	L1, L3—Miller 2002
R2—160K	L2—8 turns No. 22 enameled around bottom of L1
R3—1.6K	Crystal: see text
Capacitors (μf)	B1—6 volts
C1, C4—300 pf	
C2—0.002	

68 400-Microwatt Broadcast Transmitter

wire wrapped around the bottom of L1.

The unit's audio input, J1, is to be fed with the output of a regular hi-fi preamp. This will permit you to use high quality microphones, recording pickups, audio mixing, etc.

The crystal frequency should be towards the lower end of the standard broadcast band, as is the case with most campus broadcasters; i.e., between 540 and 700 kc. This is the range for which your crystal should be ordered.

The antenna cannot exceed 10 feet in length in order to comply with FCC rules governing radiation.

69 CW Monitor

The cheap and easy way of listening to your own CW transmission is by constructing this simple monitor.

The transformer is a *UTC* type SS019 with the output connected to a pair of earphones (low-Z).

The coil is a 2-turn link placed near the antenna terminals of the transmitter.

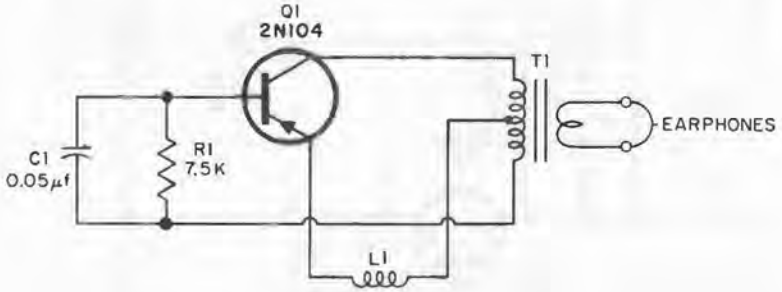

FIG.69

PARTS LIST

Transistors	**Miscellaneous**
Q1—2N104	L1—2-turn link
Resistors (ohms)	T1—UTC No. SS019
R1—7.5K	Earphones: low impedance
Capacitors (μf)	
C1—0.05	

70 27-MC Radio Control Transmitter

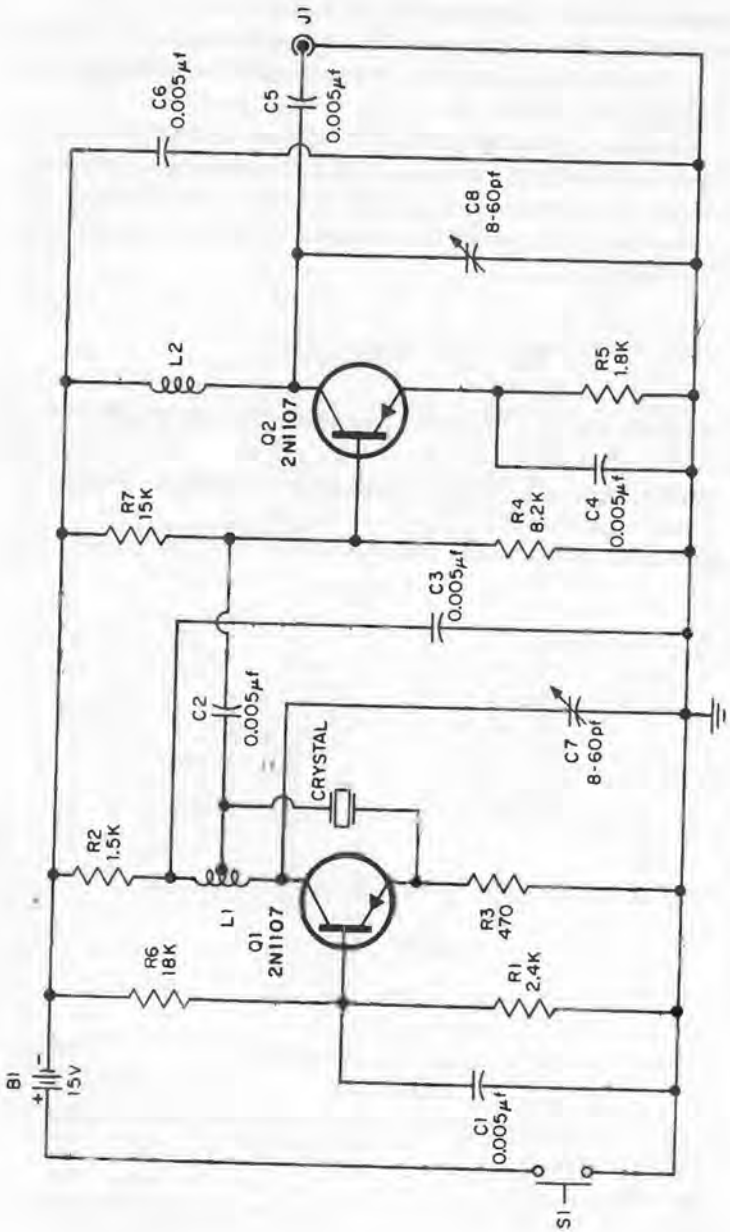

FIG. 70

70 27-MC Radio Control Transmitter

This transmitter can be made to open and close garage doors, turn on and off various pieces of household and factory equipment.

The unit should be constructed in a small metal box, with all leads as short as possible.

Coil L1 is 16 turns of No. 22 wire—use *Air Dux* No. 516. L2 is 15 turns of *Air Dux* No. 516. L1 is tapped 1-1/2 turns from the ground end.

S1 is a pushbutton switch. The antenna, an 11-meter 3-ft. *Mark* Heliwhip, is inserted in J1, which is a SO-239 coaxial socket.

The crystal can be for any one of the following frequencies: 26.995, 27.045, 27.095, 27.145, 27.195 mc. Although this unit is capable of operation on the regular 11-meter radio control channel of 27.255 mc, this channel is generally too crowded for obtaining best results. In a pinch, the unit can operate on any regular 11-meter, class D, CB voice channel, however, the interference on these channels is generally quite heavy. No license is needed for the operation of this unit for radio control purposes on the frequencies above.

PARTS LIST

Transistors	**Capacitors (μf)**
Q1, Q2—2N1107	C1, C2, C3, C4, C5, C6—0.005
Resistors (ohms)	C7, C8—8-60-pf var.
R1—2.4K	**Miscellaneous**
R2—1.5K	L1—16 turns No. 22 (Air Dux No. 516)
R3—470	L2—15 turns of Air Dux No. 516
R4—8.2K	S1—pushbutton
R5—1.8K	Crystal: see text
R6—18K	B1—15 volts
R7—15K	J1—SO-239 coaxial socket
	Antenna—3-ft. Mark Heliwhip

71 Sine Wave Generator

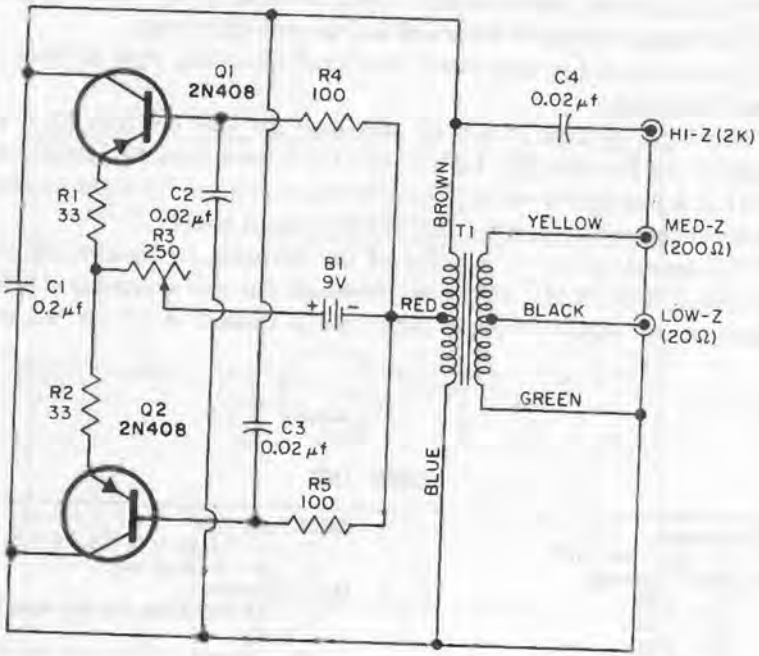

FIG. 71

This oscillator produces a pure 2000 cps undistorted signal. It may be used for working with hi-fi tests, operating bridges, and other lab work.

The unit may be breadboarded on a small vector board; layout is not critical. The transformer is an *Argonne* AR-172.

The 250-ohm potentiometer should be adjusted for best waveform.

PARTS LIST

Transistors
Q1, Q2—2N408
Resistors (ohms)
R1, R2—33
R3—250 pot.
R4, R5—100
Capacitors (μf)
C1—0.2
C2, C3, C4—0.02
Miscellaneous
T1—Argonne Ar-172
B1—9 volts

72 Light/Dark Music Maker

The next time someone tells you that they like "light music," you can build this gadget and give them a serenade in the world's only *true* "light music." Yes, this device actually produces musical tones by changes in light and dark falling upon it.

The sun battery is an *International Rectifier* type B2M.

The transformer is an *Argonne* AR-119, the speaker is a small 3.2-ohm type.

As the shadow of your hand passes over the photocell, different musical tones will be produced. Do not expect the unit to be workable in a dark, or even almost-dark, room, and not in bright sunlight.

PARTS LIST

Transistors
Q1—2N104
Q2—2N1251
Resistors (ohms)
R1—10K
Capacitors (μf)
C1—0.005
C2—25
Miscellaneous
T1—Argonne AR-119
PC1—International Rectifier Corp. B2M
S1—SPST
B1—9 volts
Speaker: 3.2 ohm impedance

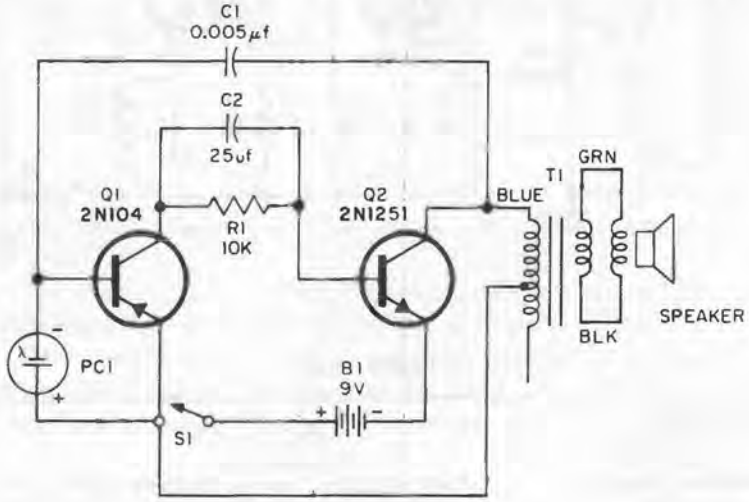

FIG. 72

73 VLF "Whistler" Receiver

The VLF portion of the r-f spectrum runs from [illegible] kc. If you monitor this portion of the radio spectrum, you are liable [illegible] hear the strange sounds which mother nature makes in the r-f spectrum. [illegible] are called "whistlers," long descending screams caused by lightning. [illegible] also hear sounds called "the dawn chorus," "clicks," "chirps," "chinks," [illegible] other phenomena which science has yet to explain. Atomic blasts and the ionized air trails from rising missiles can also be heard. The device described here will permit you to monitor these strange signals. By the way, if you should hear some CW, it is probably the U.S. Navy's 2-million-watt radio station in Cutler, Maine. They operate on 14.8 kc.

The unit may be built on a small piece of punched board, and can be enclosed in a metal box if you desire. Parts layout is not critical.

The loop antenna consists of 200 turns of No. 25 enameled wire wound

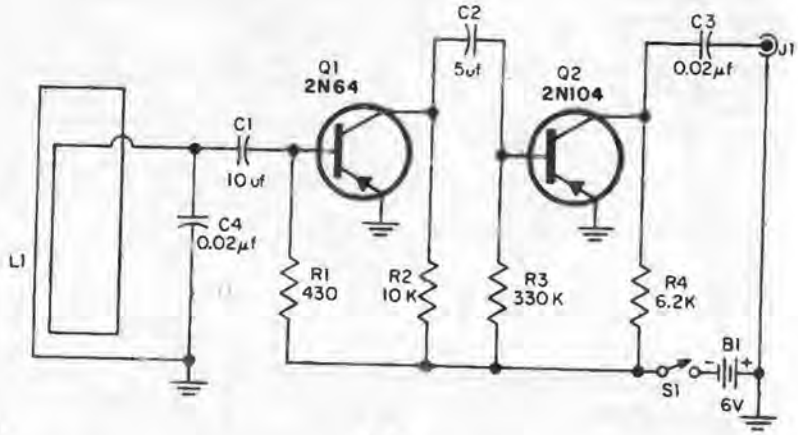

FIG. 73

PARTS LIST

Transistors	C2—5
Q1—2N64	C3, C4—0.02
Q2—2N104	**Miscellaneous**
Resistors (ohms)	L1—loop antenna—200 turns No. 25 enameled in sq. loop on wooden frame
R1—430	S1—SPST
R2—10K	B1—6 volts
R3—330K	
R4—6.2K	
Capacitors (μf)	
C1—10	

73 VLF "Whistler" Receiver

in a square loop on a wooden frame. The frame should consist of two 48-in. pieces of wood formed into an "X". The loop is joined to the unit by a length of lamp cord. Mount the loop so that it may be rotated. The rotation is necessary because of the fact that it will pick up considerable power-line hum. The loop should be rotated to a point where the hum is at it's minimum, or "null", point—where it should be permanently located.

With the antenna properly located, and the output of your unit fed into the high-impedance input of a hi-fi amplifier, you should be able to hear the clicks and pops of atmospheric noise. Early morning should bring you the dawn chorus; summertime, the whistlers; launching time, the missiles. Look for anything that differs from the normal background noise as being something worth studying.

74 Interphone Amplifier

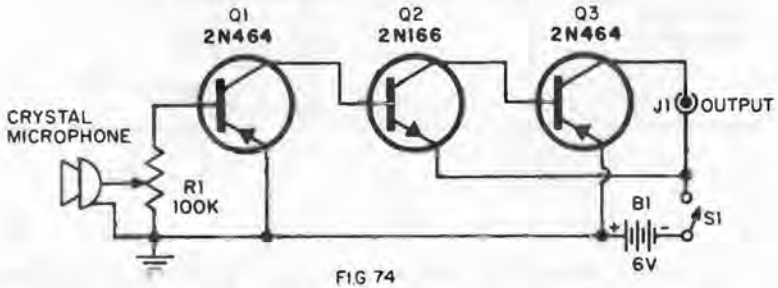

FIG 74

This circuit can be put to use for an inter-office or factory telephone amplifier.

The microphone is a crystal; the output is for a headset with 1K to 4K impedance. The 100K potentiometer is the volume control.

This unit can be built into a relatively small space, even inside a telephone type handset. Two handsets, two units, the right kinds of transmitter and headset buttons, and you have got an intercom system.

PARTS LIST

Transistors	**Miscellaneous**
Q1, Q3—2N464	Microphone: crystal
Q2—2N166	S1—SPST
Resistors (ohms)	B1—6 volts
R1—100K pot.	

75 Radio-TV Signal Tracer

This device can be used to follow a signal through its course in the circuit of a radio or TV set, or an audio amplifier.

The device can be constructed in a small plastic case. The transformer is a *Lafayette* SK-96, the speaker is a miniature PM type. S1, which selects af or rf use is a DPDT slide switch. The 25K potentiometer is the volume control. Any short, stiff piece of wire can be used as the probe—a nail will suffice.

PARTS LIST

Transistors	**Capacitors (μf)**
Q1—CK768	C1—0.05
Q2—2N104	C2—100 pf
Resistors (ohms)	C3, C4—2
R1—100K	C5—10
R2—25K pot. with switch S2	**Miscellaneous**
R3, R4—270K	T1—Lafayette 99-6209
R5—4.7K	S1—DPDT
R6—91	S2—part of R2
	D1—1N60
	Speaker: miniature PM
	B1—9 volts

The unit is designed to be grounded to the chassis of the equipment being serviced. This is accomplished by a short length of wire and an alligator clip. The ground lead and all but the tip of the alligator clip should be insulated to prevent the tracer from grounding to components within the equipment.

When testing audio equipment, S1 should be turned towards *af;* when testing radios and TV sets, towards *rf*.

75 Radio-TV Signal Tracer

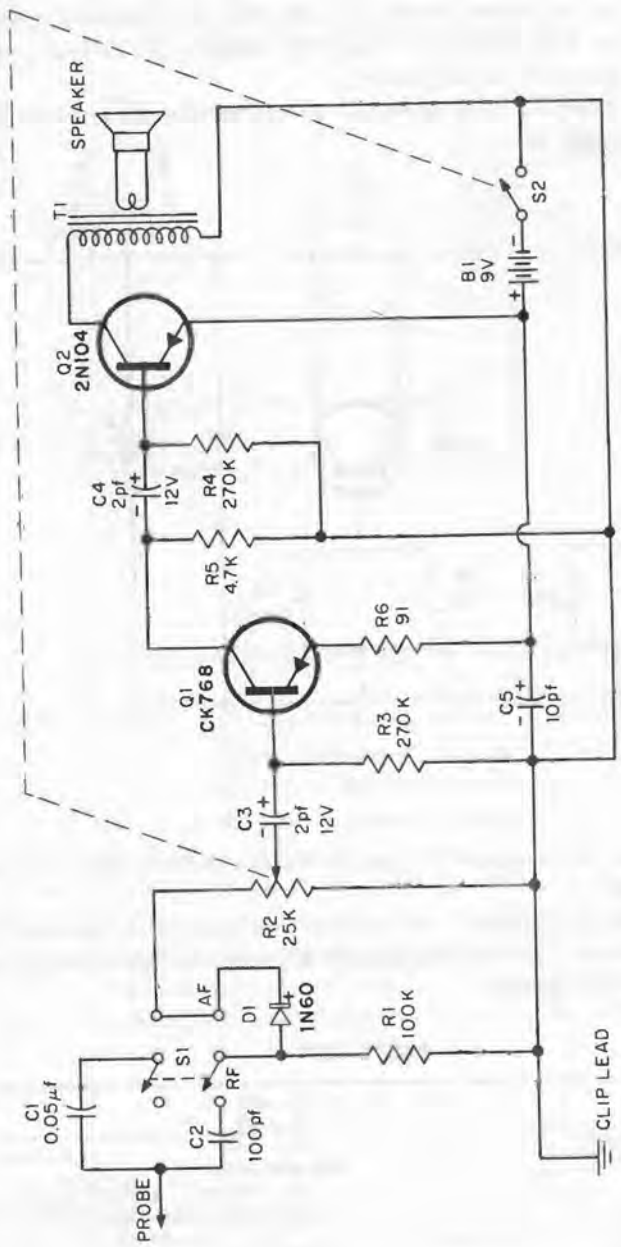

FIG. 75

76 FM Troubleshooter

This device is a signal injector for use with FM broadcast receivers. It is simply an FM, 10.7-mc, r-f oscillator, enabling you to feed a signal into the i-f circuit of an FM receiver.

L1 is a *Miller* No. 650 choke. L2 is a *Cambridge Thermionic* LSM, 10-mc slug-tuned coil.

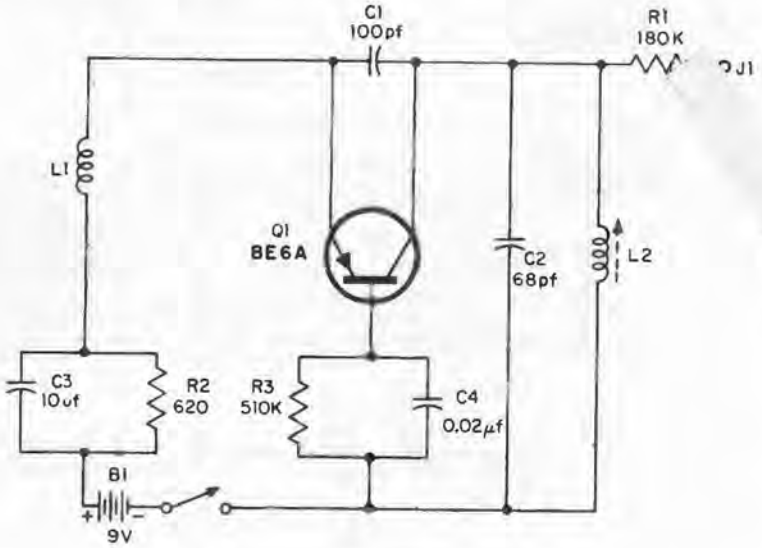

FIG. 76

The output of the unit, at J1, may be fed to a nail or other short, stiff probe-type device.

To align the unit, place it near any front end tube of an operating FM receiver or tuner, and tune L1's slug until you hear a buzz coming from the FM set's loudspeaker.

PARTS LIST

Transistors	C2—68 pf
Q1—BE6A	C3—10
Resistors (ohms)	C4—0.02
R1—180K	**Miscellaneous**
R2—620	L1—**Miller** No. 650 choke
R3—510K	L2—**Cambridge Thermionic** LSM, 10-mc slug-tuned
Capacitors (μf)	B1—9 volts
C1—100 pf	

77 Mystifying Motion

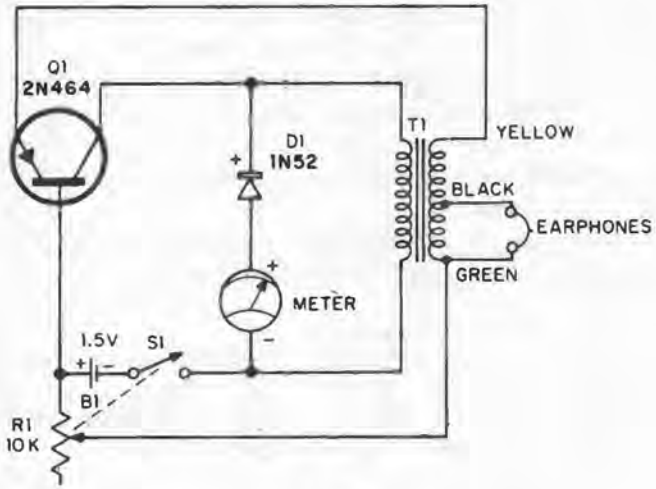

FIG. 77

This is an audio oscillator which has the unusual ability to turn itself off and on.

With a 50, 100, or 200 microammeter inserted in the circuit, the needle will swing back and forth continuously at a steady rate, with a pause about once each second. Adjust the 10K potentiometer (which contains an on-off switch) so that the earphones indicate that the circuit is just slightly in oscillation.

If you adjust the circuit to the point just below oscillation, you will note another interesting facet of this unit. With the unit adjusted thusly, a snap of your fingers near the earpiece will cause the meter to swing.

You will have no problem on parts layout for the device; it goes on a small perforated board. The transformer is an *Argonne* AR-103.

PARTS LIST

Transistors	D1—1N52
Q1—2N464	Meter—see text
Resistors (ohms)	S1—part of R1
R1—10K pot. with switch S1	B1—1.5 volts
Miscellaneous	Earphones
T1—**Argonne** AR-103	

78 Supersonic Receiver

Here's an interesting experiment in supersonic sound. This receiver acts like a radio receiver; any radio receiver or an audio amplifier can be the transmitter.

The receiver circuit may be constructed on a small piece of vector board. L1 is a *Magnetic Recording Industries'* VM-938 telephone pickup unit. The 5K potentiometer (and on-off switch) is the volume control. Spaghetti tubing should be used, covering the lead from the pickup coil to the 0.1-μf capacitor.

The transmitting antenna is a loop of wire strung around the room or area in which the reception will take place. The loop of wire is connected

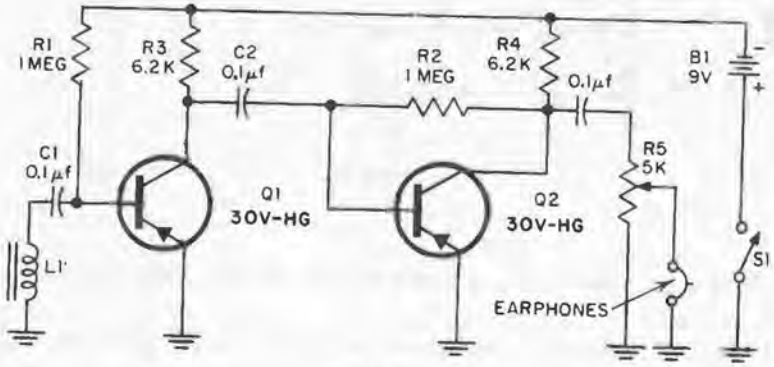

FIG. 78

at each of its ends to the speaker connections of a radio or amplifier. However, the loop's impedance must match up with that of the receiving unit.

Always use insulated wire for the loop, using the thinnest possible wire for the loop. You should have a 10-ohm resistor of the same wattage rating as the amplifier inserted in series with the loop.

PARTS LIST

Transistors	**Miscellaneous**
Q1, Q2—30V-HG	L1—Magnetic Recording Industries' VM-938 telephone pickup
Resistors (ohms)	Earphones
R1, R2—1Meg	S1—part of R5
R3, R4—6.2K	B1—9 volts
R5—5K pot. with switch S1	
Capacitors (μf)	
C1, C2—0.1	

79 World's Smallest Receiver?

This may or may not be the world's smallest receiver. However, it's probably the smallest you'll be able to build with standard components.

Coil L1 is a vari-loopstick, the headphone is a miniature 2K type used in small transistor radios. For sake of miniaturization, the loopstick can

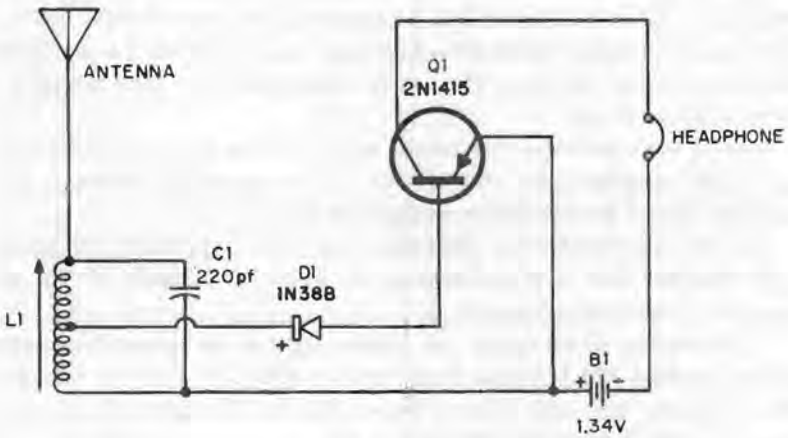

FIG. 79

be cut off about 2/3 of the way from the end away from the coil; however, this is complicated and involves unwrapping the coil, wrapping it back again, etc.

The radio should fit into a 1-in. x 1-in. plastic box, with a hole drilled in the side to accommodate the loopstick. The receiver is tuned by adjusting the loopstick's slug.

The battery is a No. 520 mercury cell of the type used in eyeglass hearing aids.

The antenna is any long length of wire.

PARTS LIST

Transistors	D1—1N38B
Q1—2N1415	Headphone: miniature 2K
Capacitors	Antenna—long length wire
C1—220 pf	B1—1.34-volt No. 520, mercury cell
Miscellaneous	
L1—vari-loopstick	

80 WWV Converter for AM Radio

This unit serves a multitude of causes—it gives you the correct time, it gives you perfect 440-cps and 660-cps pitch, and ionospheric propagation reports. All this comes out of your home AM radio with this converter.

The converter is constructed in a small metal chassis and the components are mounted on a small perforated board.

Coil L1 is 9 turns of No. 34 enameled wire wound over the ground end of L2. L2 is 60 turns of No. 34 enameled wire wound on a 3/8-in. diameter, *Cambridge Thermionic* slug-tuned type LS3 form. L2 is tapped at 35 turns by a 2-in. loop. The coil is coated with clear dope before L1 is wound into place.

Coil L3 is a *Cambridge Thermionic* type LS3-5-mc slug-tuned coil, with a piece of cellophane tape wrapped over it to accommodate L4, which is 6 turns of No. 30 enameled wire wrapped on L3.

Coil L5 is a *North Hills Electronics* No. 120-I type, with cellophane tape wrapped over it to accomodate L6, which is 10 turns of No. 30 enameled wire wrapped around L5.

To determine which crystal you should use, pick an unused frequency in the standard AM broadcast band between 1000 and 1500 kc. Subtract the frequency you have selected from 5000 kc. The result is the frequency of the crystal you will need.

The antenna can be a short piece of wire if you are located in the eastern portion of the country. In some areas it may be necessary to string up a random length of wire outside to secure good reception of WWV.

Shielded wire is used to couple the output of the converter to the receiver's antenna terminals.

With the converter on and coupled to the operating receiver, tune to

PARTS LIST

Transistors
Q1, Q2—2N370
Resistors (ohms)
R1—430K
Capacitors (μf)
C1—39 pf
C2—47 pf
C3—33 pf
C4—0.002
Miscellaneous
L1—9 turns No. 34 enameled over ground end of L2
L2—60 turns No. 34 enameled on 3/8-in. D. slug-tuned form **(Cambridge Thermionic LS3)**
L3—**Cambridge Thermionic** LS3-5-mc coil
L4—6 turns No. 30 enameled around L3
L5—**North Hills Electronics** No. 120-I coil
L6—10 turns No. 30 enameled around L5
Crystal—see text
Antenna—see text
S1—SPST
B1—3 volts

80 WWV Converter for AM Radio

the frequency in the broadcast band which you have chosen. You should hear WWV, or some of the stations which operate near WWV's frequency. Tune your broadcast receiver slightly to each side of the chosen frequency and you should hear WWV's steady tone and clock ticks. Touch up L1, L2, L5, and L6 for maximum signal.

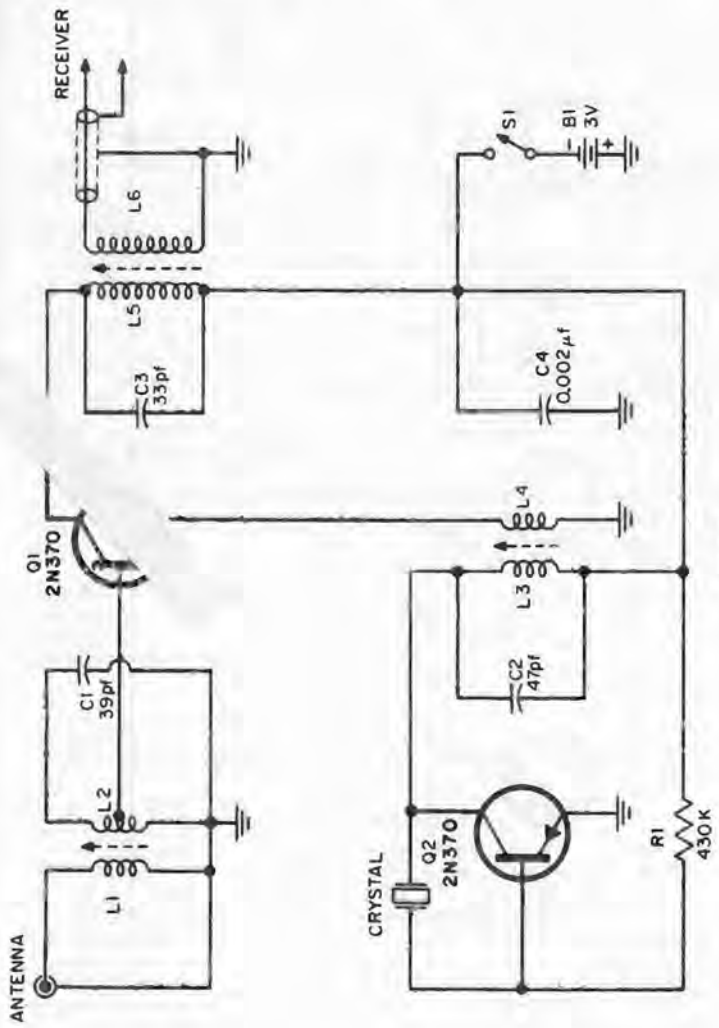

FIG.80

81 Theremin

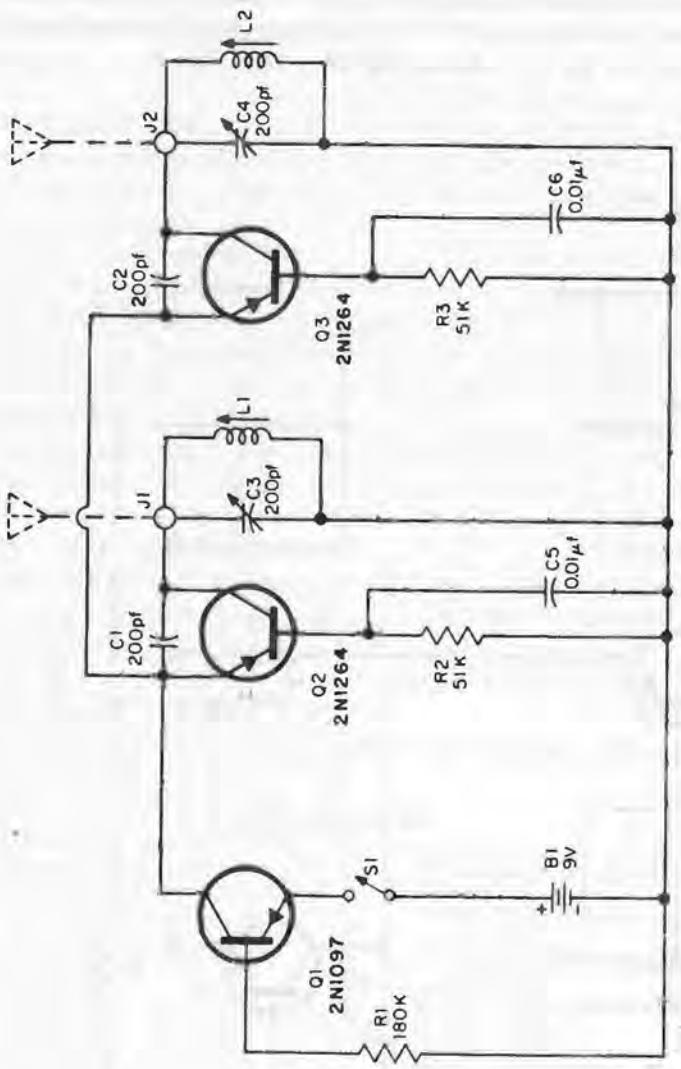

FIG. 81

81 Theremin

Perhaps you've heard recordings of this eerie musical instrument, or maybe you've heard its wailing sound in science fiction movies. At any rate you can construct your own Theremin without too much trouble—enjoy some strange "outer space" music and experiment with the effect capacitance can have on an oscillator circuit's frequency.

Our Theremin is constructed in a 7-in. x 5-in. x 2-in. metal box, with a punched board as the chassis.

Parts are standard: J1 and J2 are "5-way" binding posts, the two antennas are *Lafayette* F-343 whips. The coils are vari-loopsticks. The leads should be as short as possible, the shield connections on the two 2N1264 transistors should be cut off, and care should be taken not to let the circuit wiring come in contact with the cabinet box. The loopsticks should be in the center of the chassis. J1 and J2 mount on opposite sides of the 7-in. length of the chassis.

When the unit is constructed, the two whip antennas are placed in the binding posts in a vertical position. The unit is then placed near the back of an AM broadcast radio. The loopstick slugs are set about halfway in. Now adjust the 200-pf capacitor at J1 until a hissing noise is heard over the radio, at about the center of the band. Next adjust the 200-pf capacitor at J2 until you hear a very loud whistle. The AM radio's dial setting should not be changed.

Go back to the 200-pf capacitor at J1 and readjust it for the lowest pitch. You ar[illegible]w ready for playing the instrument.

The plain a[illegible]mple way of playing the Theremin is by moving your hands around [illegible] air a few inches away from the antennas. It is not necessary to tou[illegible] antennas. With a little practice you might be able to play a recogni[illegible] melody.

PARTS LIST

Transistors	C3, C4—200-pf var.
Q1—2N1097	C5, C6—0.01
Q2, Q3—2N1264	**Miscellaneous**
Resistors (ohms)	L1, L2—vari-loopstick
R1—180K	J1, J2—5-way binding post
R2, R3—51K	Antennas: Lafayette F-343 whips
Capacitors (μf)	S1—SPST
C1, C2—200 pf	B1—9 volts

82 Power Supply for Tunnel Diodes

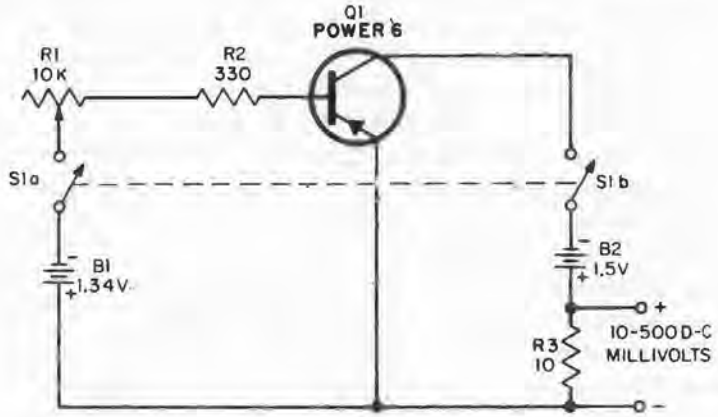

FIG. 82

Here's a power supply which delivers between 10 and 500 d-c millivolts, ideal for experimenting with tunnel diodes.

Construction can be encased in a small aluminum box, with parts layout not critical. Do not attempt to use the metal box as a heat sink for the Power 6 transistor—the transistor doesn't need one here and the circuit will not function if the case of transistor is grounded to the box.

The battery is a 1.34-volt mercury cell.

The 10K potentiometer is the output control so it should be mounted where it is readily accessible.

To use the unit, start with the output control set to minimum output. Then slowly advance the control until the tunnel diode begins to function.

Place bypass capacitors at the tunnel diode rather than at the output of the power supply.

PARTS LIST

Transistors	R3—10
Q1—Power 6	**Miscellaneous**
Resistors (ohms)	S1—DPST
R1—10K pot.	B1—1.34 volts
R2—330	B2—1.5 volts

83 Beat Frequency Oscillator

If you have a receiver with an inadequate BFO, or are designing your own receiver, here's a circuit which you will find to be handy.

The BFO can be mounted in a small metal container or wired directly into an existing circuit.

The transformer, T1, is a *Miller* 9-C2 transistor i-f transformer. The transformer must be modified as follows: remove the shield can, screw the tuning slug out as far as it will go, clip the 2 leads indicated in the illustration. Exercise care not to damage the base of the transformer or the small capacitor inside the case.

The pitch of the BFO is controlled by the 15-pf variable capacitor.

To align the unit, set the pitch control at its midpoint. The slug in the i-f transformer is then resonated at 455 kc, which may be accomplished with a grid-dip oscillator or by using your receiver. As you tune the slug using your receiver, you should hear the heterodyne note of the BFO lowering in pitch and eventually zero-beating. The zero-beat point is where you should stop tuning the slug.

The antenna for the BFO can be a piece of enameled wire wrapped around your antenna lead at a point near the receiver.

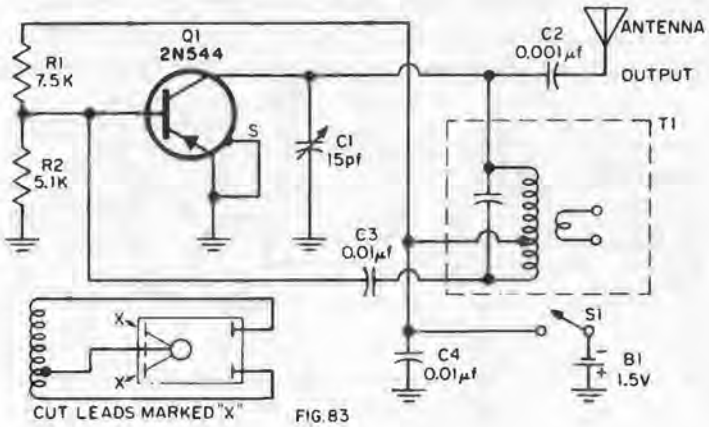

FIG. 83

PARTS LIST

Transistors	C2—0.001
Q1—2N544	C3, C4—0.01
Resistors (ohms)	**Miscellaneous**
R1—7.5K	T1—Miller No. 9-C2 transistor i-f
R2—5.1K	S1—SPST
Capacitors (μf)	B1—1.5 volts
C1—15 pf var.	Antenna—see text

84 VU Meter

Many audiophiles can never seem to attain a "perfect" recording. One of the reasons for this is overmodulation, together with its inherent distortion. Another reason is undermodulation with hum and noises. A VU meter will enable you to keep a watchful eye on your recording level at all times so that you can "ride the gain" control of the recorder to keep your sound level constant and at the proper setting for maximum quality.

The VU meter can be constructed in a small metal box, using the box itself as the chassis. The meter is a *Lafayette* TM-10. It is connected by shielded cable to the grid of the last stage in the recorder's voice amplifier.

If you cannot get adequate signal from this point in your recorder, the unit should be tried at other spots in the circuit, with care to avoid connecting it where a high d-c voltage exists. If you can obtain a signal only at a high d-c voltage source, remember that the electrolytic capacitor at the VU meter's input is only rated for 25 volts. A 0.5-μf capacitor with at least a 400-volt rating should, therefore, be placed in series with the existing 25-volt capacitor.

To calibrate the unit for your equipment, play a recording into the unit at various recording levels. Make a note of the recording level at each of the test levels. Pick the maximum-quality level on the meter and mark it on the face. This is the point where your recordings should average (do not calibrate the meter for loud sound-peaks).

The input level of the meter is controlled by the 500K potentiometer.

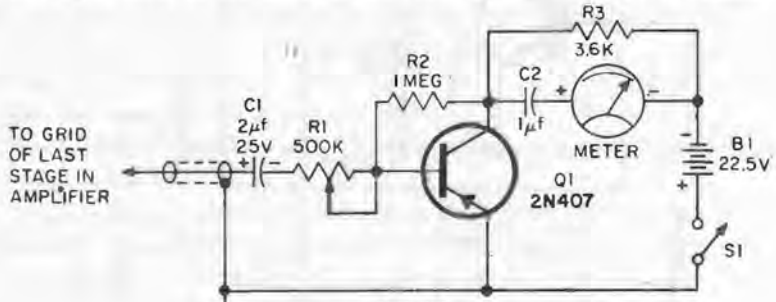

FIG. 84

PARTS LIST

Transistors	**Capacitors (μf)**
Q1—2N407	C1—2
Resistors (ohms)	C2—1
R1—500K pot.	**Miscellaneous**
R2—1Meg	Meter: Lafayette TM-10
R3—3.6K	S1—SPST
	B1—22.5 volts

85 Square Wave Generator

If you're interested in doing some servicing on your hi-fi equipment, you will undoubtedly find this square wave generator to be a handy item. It can feed from the output of a sine wave generator and puts out about 1 volt, or its own 60-cps signal.

The unit is constructable in a small aluminum box. Transformer is a *Stancor* P6465, S1 is a DPST switch, S2 a SPDT. The 50K potentiometer is the output level control.

If you use the generator with an external signal source, do not plug in the 117V a-c line cord. The signal source is inserted in J1, the circuit under test in J2. Place S2 in the *EXT* position.

To use the internal signal, plug in the unit, place S2 in the *INT* position.

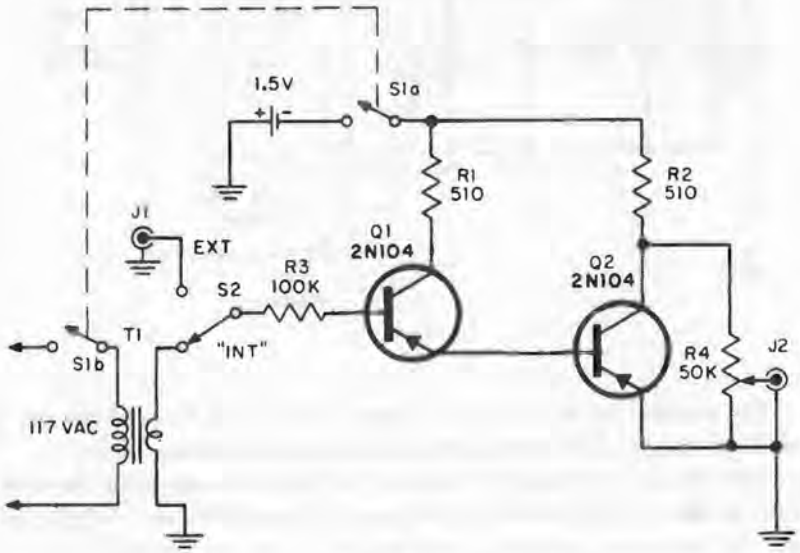

FIG. 85

PARTS LIST

Transistors	**Miscellaneous**
Q1, Q2—2N104	S1—DPST
Resistors (ohms)	S2—SPDT
R1, R2—510	T1—Stancor No. P6465
R3—100K	B1—1.5 volts
R4—50K pot.	

86 Most Powerful Crystal Set?

Crystal sets come and go, but this pint-sized set is just about the ultimate in crystal set selectivity and audio output.

L2 and L3 are ferri-loopsticks. L1 and L4 are both 22 turns of No. 24 cotton-covered wire on small cardboard tubes. The tubes are sized so that they can slip over the loopsticks with little room to spare.

The 365-pf capacitor is a 2-gang variable, such as *Lafayette* MS-142. The 180-pf trimmer is soldered across the stator terminals of the 2-gang variable.

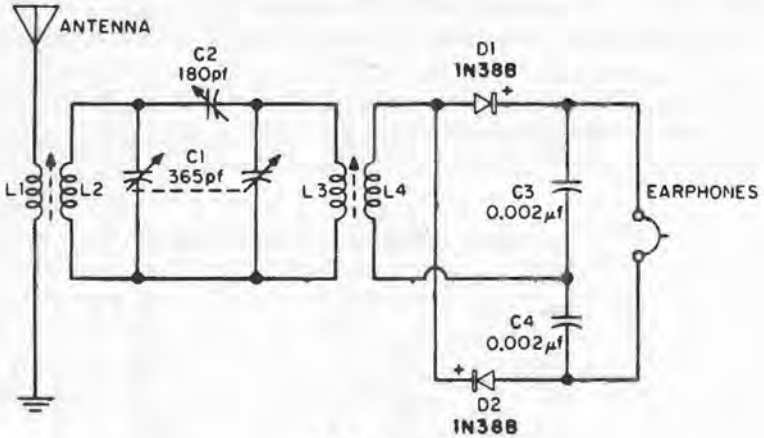

FIG. 86

The antenna can be any length longer than 50 feet. Ground the set to a cold water pipe. The headset should be of high impedance.

Tune in on a station at the high end of the band and adjust the trimmers on the 2-gang variable for best signal. Then adjust the 180-pf trimmer for maximum selectivity and volume across the band. L3 and L4 should also be manipulated back and forth for best reception. L2 will help you peak up weaker stations.

PARTS LIST

Capacitors (μf)
- C1—365-pf var. 2 gang (Lafayette MS-142)
- C2—180-pf var.
- C3, C4—0.002

Miscellaneous
- L1, L4—22 turns No. 24 cotton-covered on small cardboard tubes
- L2, L3—ferri-loopsticks
- D1, D2—1N38B
- Antenna—see text
- Earphones: high impedance

87 Headset/Loudspeaker Converter

This gadget permits you to have loudspeaker volume on a set designed for headset reception.

The transformer is an *Argonne* AR-167, the speaker is a 5-in. or larger PM type.

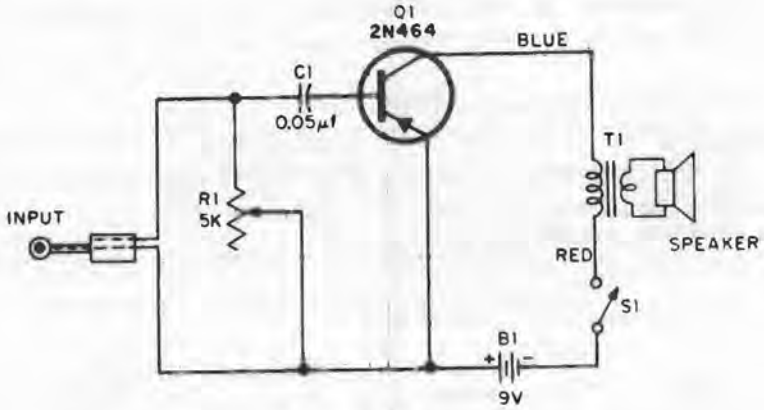

FIG. 87

The 5K potentiometer should be adjusted for maximum undistorted volume.

If results with this circuit are less than desired, try connecting a resistor between the base of the 2N464 and the positive terminal of the battery. Values bewteen 100K and 2 megohms should be tried.

PARTS LIST

Transistors
- Q1—2N464

Resistors (ohms)
- R1—5K pot.

Capacitors (μf)
- C1—0.05

Miscellaneous
- T1—Argonne AR-167
- Speaker: 5-in. or larger PM
- S1—SPST
- B1—9 volts

88 Electronic Thermometer

Here's the lazy man's way of finding out the temperature on a cold winter's morning. The device uses a thermistor which may be remotely located outside your window, while the indicating mechanism can be placed inside the house.

A push down on the pushbutton switch and you get an instantaneous reading on the meter.

The meter is an 0 to 5 milliammeter. You can calibrate the meter in degrees Fahrenheit by subjecting the thermistor to known temperatures and then marking the meter readings.

PARTS LIST

Transistors	R2—10K pot.
Q1—SK7	**Miscellaneous**
Q2—2N1415	S1—pushbutton
Resistors (ohms)	Meter: 0-5 ma
R1—thermistor, 31D7	

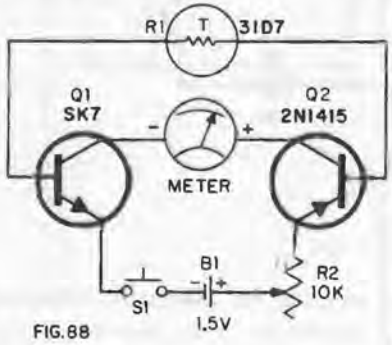

FIG. 88

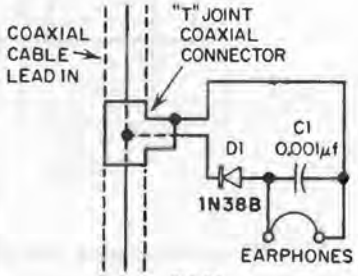

FIG. 89

89 Modulation Monitor

Possibly the most basic circuit in this volume, the modulation monitor can be one of the most useful around a ham or CB station. This device enables you to hear your own transmissions to check your modulation.

Four components make up the entire unit. The only critical one being the earphone which must be a magnetic or dynamic type.

PARTS LIST

Capacitors (μf)	**Miscellaneous**
C1—0.001	D1—1N38B
	T-joint coaxial connector
	Earphones: magnetic or dynamic

90 12-VDC-to-117-VAC Inverter

This inverter is especially useful when traveling in autos or small boats. It will permit you to operate appliances which require 117 volts ac and as much as 10 to 15 watts.

Build the inverter on a small metal chassis.

The transformer is a *Thermador Electrical Manufacturing Company,* type 6L6000.

The two power transistors must be mounted on a heat sink; however, extreme care must be taken to make certain that they don't make any electrical connection to the chassis.

The pilot light is a *G.E.* No. 1815.

To test the unit, place a 1.5-volt battery at the input terminals and check the output receptacle with an a-c voltmeter. If no reading is obtained, reverse the two leads to the transistors' base connections.

With the inverter's input increased to the full 12 volts, the output should read approximately 150 volts ac with no load connected. The pilot light should now light. Test the output with a 10-watt electric light bulb.

The circuit should be fused with a 4-amp 32-volt fuse.

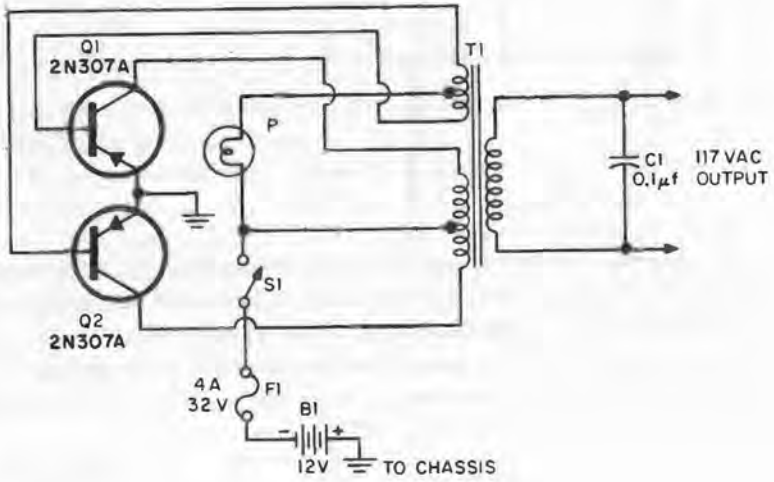

FIG. 90

PARTS LIST

Transistors	**Miscellaneous**
Q1, Q2—2N307A	T1—Thermador No. 6L6000
Capacitors (μf)	P—Pilot light (G.E. No. 1815)
C1—0.1	F1—4 amps, 32 volts
	B1—12 volts

91 Electric Eye Alarm

This is a simple but useful circuit. When light shines on the photocell all is quiet. If the light is interrupted or stops then a warning alarm is sounded.

The photocell is an *International Rectifier Corp.* type DP-5. The relay is a *Sigma* type 4-F, which may have to be slightly adjusted by moving its pivot screw slightly for maximum sensitivity.

Component X can be any type of alarm bell or buzzer. X has its own power supply.

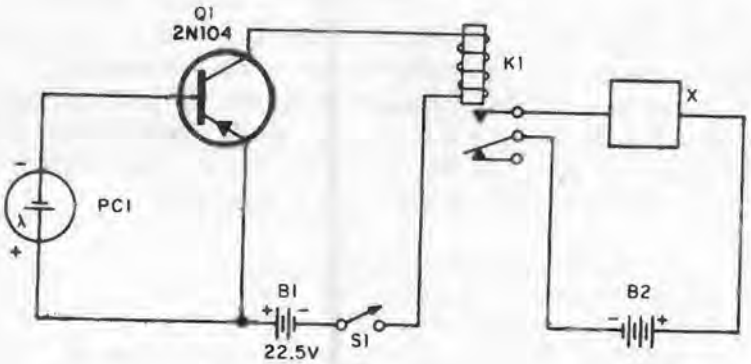

FIG. 91

You may have to place a cardboard cylinder over the photocell to keep out extraneous light, especially if the cell is to be located in a bright area.

The light supply for the photocell can be a 12-volt auto spotlight operated from the 117-volt a-c power lines by means of a transformer. The light supply can possibly be about 20 to 30 feet away from the photocell.

PARTS LIST

Transistors	K1—Sigma 4-F
Q1—2N104	X—alarm bell or buzzer
Miscellaneous	S1—SPST
PC1—International Rectifier Corp. DP-5	B1—22.5 volts
	B2—power for X

92 15-Meter "Flea Watter" Transmitter

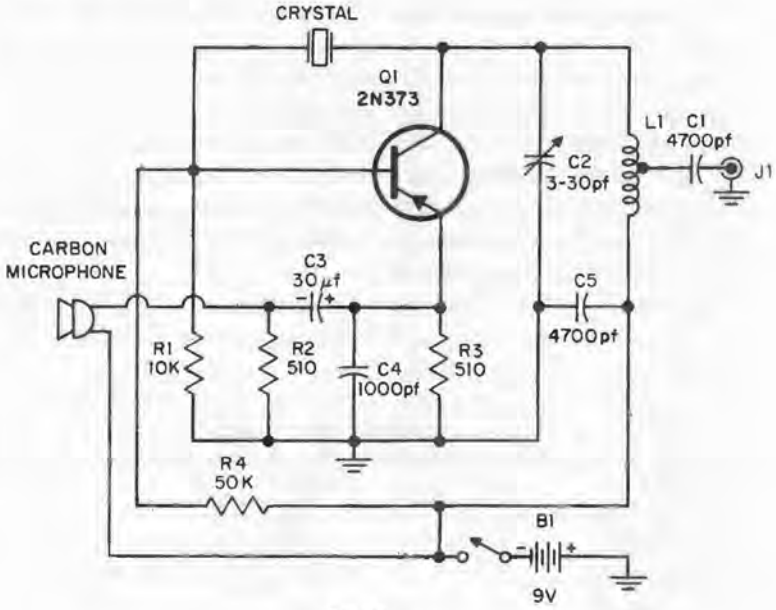

FIG. 92

The transmitter discussed here may be built in a tiny plastic box, using a punched board as the chassis.

The unit is powered by a carbon mike, L1 is 17 turns of *B&W* type No. 3007 coil tapped 8 turns from the 4700-pf capacitor. The crystal is a 21-mc third overtone type. J1 can be a standard *Amphenol* SO-239 to permit operation on your base station beam.

To tune the transmitter, turn on your receiver and set it to the "Flea Watter's" frequency. Peak the 3-30 pf trimmer in conjunction with the receiver's S-meter. That's all there is to it.

PARTS LIST

Transistors	C3—30
Q1—2N373	C4—1000 pf
Resistors (ohms)	**Miscellaneous**
R1—10K	L1—17 turns of B & W No. 3007
R2, R3—510	Crystal: 21-mc 3rd overtone
R4—50K	J1—standard Amphenol SO-239
Capacitors (μf)	Microphone: carbon
C1, C5—4700 pf	B1—9 volts
C2—3-30-pf var.	

93 Artificial Larynx

This circuit was designed by the *Bell Telephone Laboratories* and is described here with their permission.

The device was designed to be used by persons who have lost their voices through surgical removal or paralysis of their vocal cords. The unit is used by pressing it against the throat and switching on the unit with the finger. With experience, users report a 97% intelligibility. The device may be used by men or women, as the repetition frequency of the artificial larynx may be adjusted. Normally it is about 200 to 400 cps for a woman. The 250K potentiometer controls this.

The device is powered by two 5.0V mercury cells. The vocal pickup unit (T1 on the schematic) is a telephone receiver type HA-1 button, modified to act as a transducer.

PARTS LIST

Transistors
- Q1—2N169
- Q2—2N188A
- Q3—2N174

Resistors (ohms)
- R1—2.7K
- R2—1.5K
- R3—250K pot. with switch S1
- R4—680
- R5, R6—510

Capacitors (μf)
- C1—200
- C2—0.35

Miscellaneous
- T1—telephone receiver HA-1 button
- D1—1N137A
- S1—part of R3
- B1—10 volts

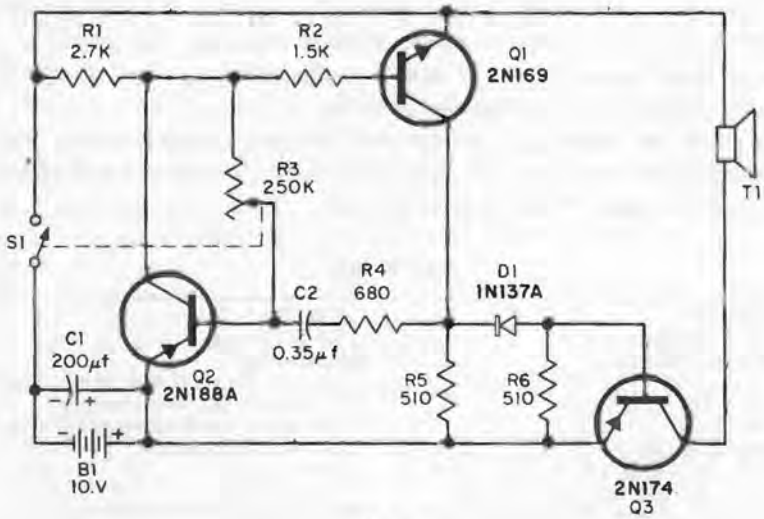

FIG. 93

94 FM "Mini-ceiver"

Here's a simple one-transistor, FM broadcast receiver. The receiver does not require an external antenna.

The chokes indicated as RFC1 and RFC2 consist of 10 turns of hookup wire wound at 3/8-in. diameter.

The 1 meg potentiometer controls the regeneration of the circuit. It should be properly adjusted and then made permanent with a shaft lock.

The receiver tunes the FM band by means of the 25-pf capacitor.

Coil L is 1-1/4 to 2-1/2 turns of No. 20 solid, insulated wound, 1-1/8-in. diameter. Experiment to see which number of turns gives you maximum reception.

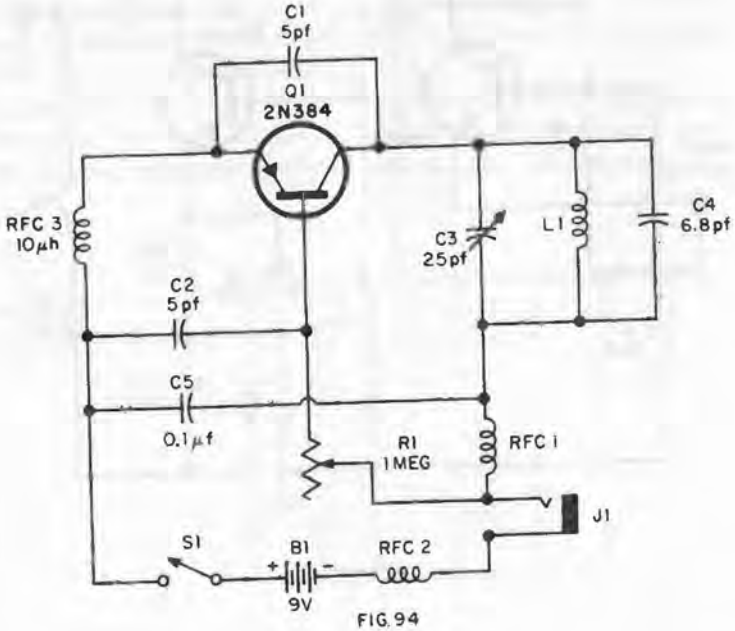

FIG. 94

PARTS LIST

Transistors
- Q1—2N384

Resistors (ohms)
- R1—1Meg pot.

Capacitors (μf)
- C1, C2—5 pf
- C3—25-pf var.
- C4—6.8 pf
- C5—0.1

Miscellaneous
- L1—1-1/4–2-1/2 turns No. 20 solid, insulated on 1-1/8-in. D.
- RFC1, RFC2—10 turns hookup on 3/8-in. D.
- RFC3—10 μh
- B1—9 volts
- S1—SPST

95 Audio Preamplifier

If you've ever tried to run a long cable on a low-impedance microphone you will probably have a need for this device. It permits the use of low-impedance mikes and phono cartridges at reasonable distances from high-impedance inputs on recorders and amplifiers.

The unit is easily constructed on a small chassis, and can be inserted anywhere in your mike cable.

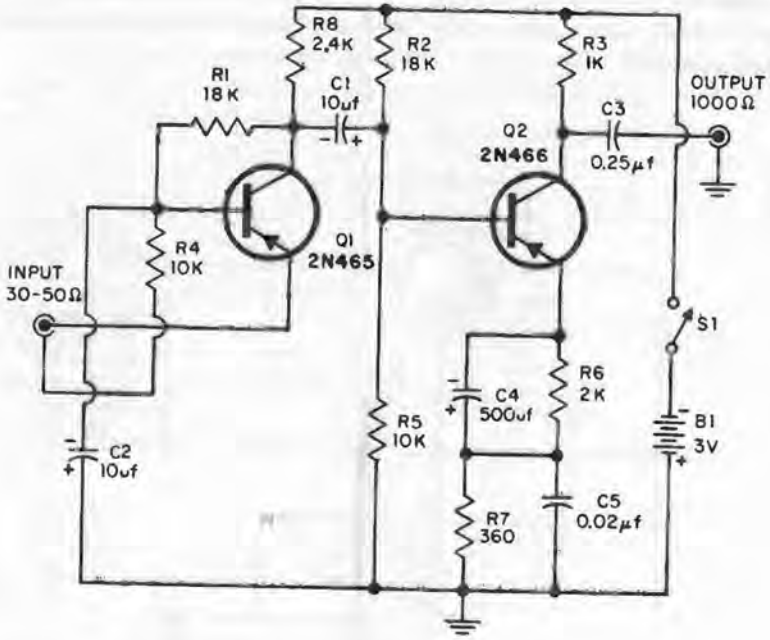

FIG. 95

PARTS LIST

Transistors	**Capacitors (μf)**
Q1—2N465	C1, C2—10
Q2—2N466	C3—0.25
Resistors (ohms)	C4—500
R1, R2—18K	C5—0.02
R3—1K	**Miscellaneous**
R4, R5—10K	B1—3 volts
R6—2K	S1—SPST
R7—360	

96 Hearing-Saver Headphone Adapter

Using a headphone usually gives a "plus" when listening for weak stations—headphones *can* give you quite a headache though if you tune across a very loud station while straining to hear a weak one. This adapter will cut these loud signals down to a painless level. It will also take the grief of loud static.

Build the unit in a 4-in. x 2-1/4-in. x 2-1/4-in. aluminum box.

The coil, L1, is a *Stancor* WC-14 with the slug screwed all the way in. The switch is a DPST.

To test the unit, plug the unit into a receiver and plug your headphones into the adapter's jack. With the adapter's on-off switch *off*, advance the receiver's volume control until the weaker signals are at the proper volume level for easy listening. Of course, now the strong signals will be far too loud. Switch on the adapter and you will find that the loud signals will revert to a pleasurable listening level.

Increasing the value of the 0.05-μf capacitor to 0.1-μf is suggested for CW operation. The 2.4K resistor is more or less optional—some headsets will function better without it, or with one of a different value.

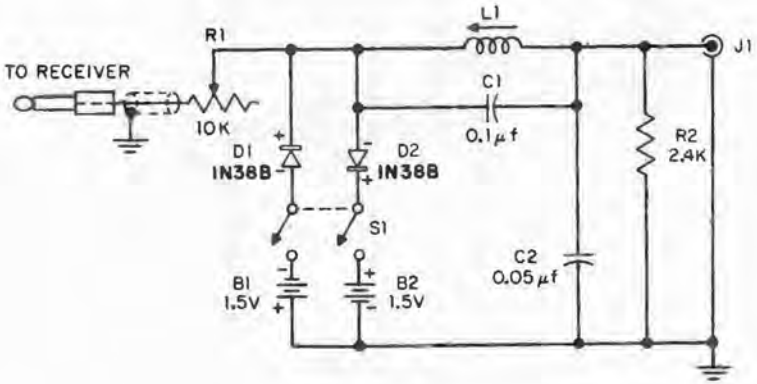

FIG. 96

PARTS LIST

Resistors (ohms)	**Miscellaneous**
R1—10K pot.	L1—Stancor WC-14
R2—2.4K	S1—DPST
Capacitors (μf)	B1, B2—1.5 volts
C1—0.1	D1, D2—1N38B
C2—0.05	

97 Dynamic Microphone

Did you know that a small dynamic loudspeaker can be made into high output dynamic microphone? It can, and here's how to do it.

Using a 3-in. speaker for the microphone, you can easily construct this circuit in a 7-in. x 5-in. x 3-in. aluminum box.

The circuit contains two batteries which are controlled by a DPST on-off switch.

For better quality, larger speakers may be used; however, the larger the loudspeaker used, the more cumbersome the microphone.

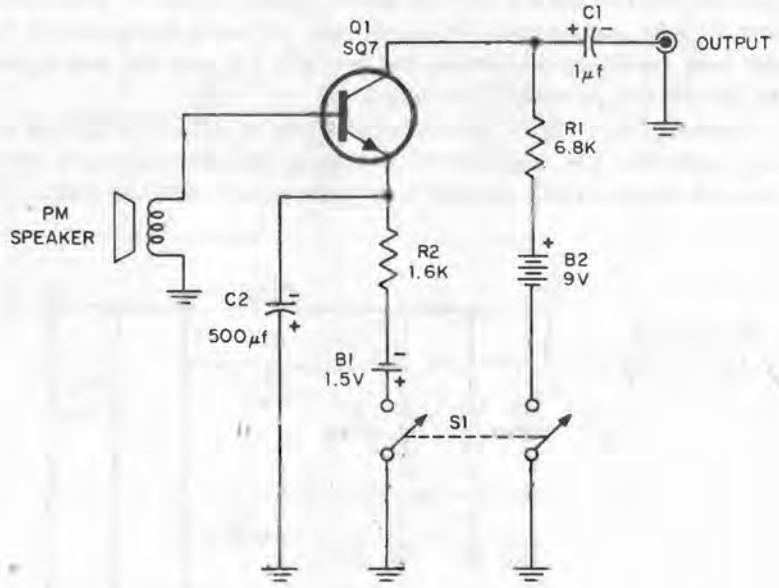

FIG. 97

PARTS LIST

Transistors	C2—500
Q1—SQ7	**Miscellaneous**
Resistors (ohms)	Speaker: 3-in. PM
R1—6.8K	S1—DPST
R2—1.6K	B1—1.5 volts
Capacitors (μf)	B2—9 volts
C1—1	

98 Darkroom Timer

The darkroom timer described will generate a click for you at intervals ranging from 1/2 second to 20 seconds depending on the setting of the coil slug.

Coil L1 and L2 is a *Meissner* 14-1071 type, the slug is set for the proper click rate, using a clock to calibrate the settings.

The speaker can be any 3.2- to 16-ohm PM type.

To extend the click rate for longer periods of time, you can insert a nail into the coil in addition to the slug.

PARTS LIST

Transistors	**Miscellaneous**
Q1—2N407	L1, L2—Meissner 14-1071
Capacitors (μf)	Speaker: 3.26-16-ohm PM
C1—100	S1—SPST
C2—365-pf var.	D1—1N60
	B1—6 volts

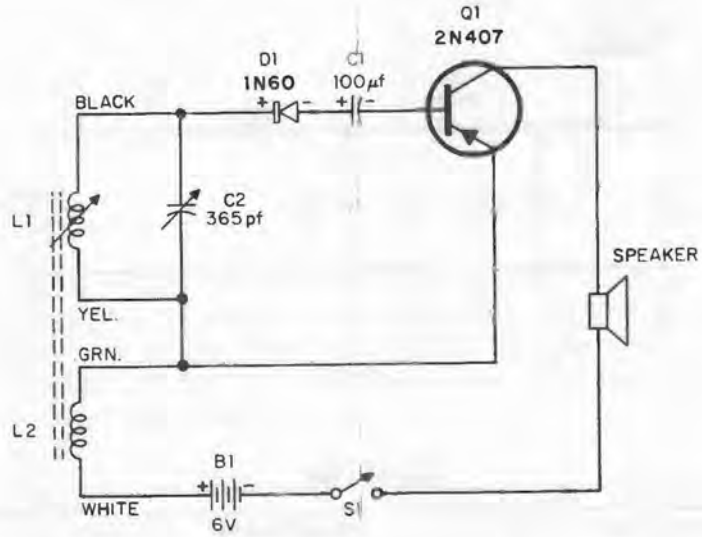

FIG. 98

99 Electricity Stealer

This device is a combination of "something for nothing" and "perpetual energy." It is a gadget which converts the radiated energy of a radio broadcasting station into electricity without any direct connections to the antenna of the broadcasting station!

The 365-pf capacitor is tuned to the frequency of a strong local broadcasting station, the stronger the better, and the closer to you geographically the better. Tuning may be aided by the insertion of a pair of headphones at the terminals of the 8-μf capacitor, with one side of the capacitor disconnected.

The coil is a vari-loopstick, your antenna should be any random length of wire over 50 ft., and the ground connection should be to a cold water pipe.

Maximum results can be obtained if the antenna is of the following lengths for reception of stations operating within the frequency bands indicated:

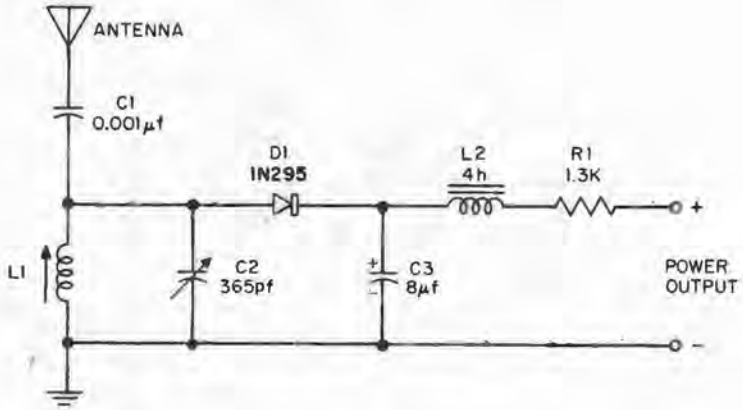

FIG. 99

PARTS LIST

Resistors (ohms)	**Miscellaneous**
R1—1.3K	L1—vari-loopstick
Capacitors (μf)	L2—4h
C1—0.001	Antenna: length over 50 ft (see text)
C2—365-pf var.	D1—1N295
C3—8	

99 Electricity Stealer

Frequency Band	*Length*
550-900 kc	160 ft.
900-1250 kc	125 ft.
1250-1600 kc	90 ft.

The power output will be about 300 microamperes at 3 volts, or 1000 microamperes at 0.8 volts.

Peak up the reception with the loopstick slug.

100 Flashing Light

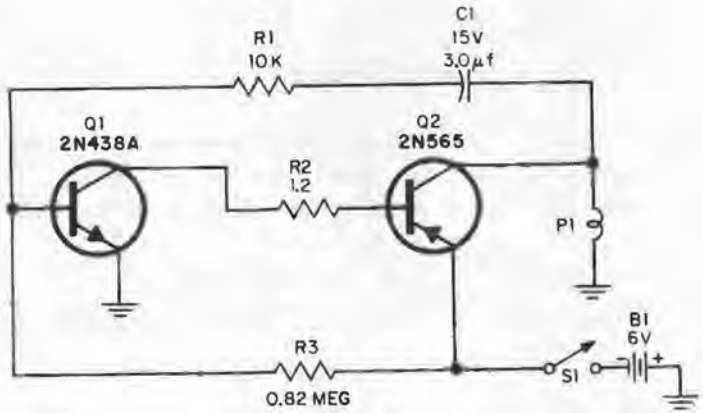

FIG. 100

This is an experimenter's delight, and also useful to keep in the car for emergency use. Around the ham shack, it's a nice light for atop the tower to ward off low flying planes and high flying butterflies.

The light will flash about once a second, and can be varied by varying the value of the capacitor.

PARTS LIST

Transistors	**Capacitors (μf)**
Q1—2N438A	C1—3.0, 15 v
Q2—2N565	**Miscellaneous**
Resistors (ohms)	P1—bulb, 4 volts, 60 ma
R1—10K	S1—SPST
R2—1.2	B1—6 volts
R3—0.82Meg	

101 Preamp for 420-MCS Band

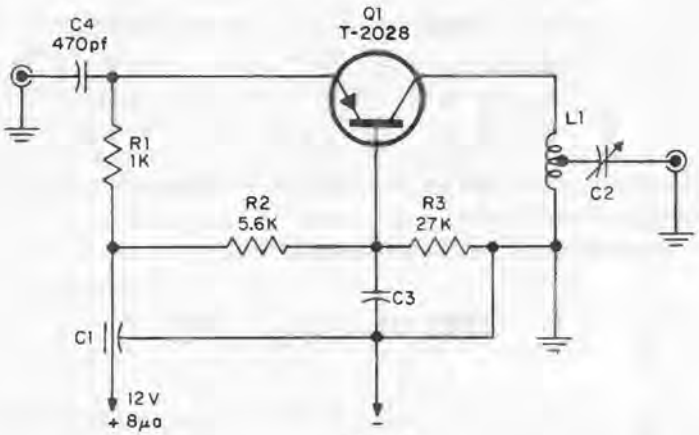

FIG. 101

There is quite a bit of interest in the 420-mcs Amateur band now that the FCC has lifted the power restrictions. This little preamp will give about 10-db gain with a very low noise figure. It is constructed on a chassis 1/2-in. x 1-1/4-in. x 1-in.

C1 is a 1500-pf UHF bypass feedthrough, *Erie* 357.

C2 is a 0.7- to 3-pf plastic dielectric piston trimmer, *Erie* 535C, No. 535-OR7.

C3 is a 1000-pf UHF bypass, *Sprague* type 507C.

L1 is 3 turns of No. 20 wire wound with a 1/4-in. inner diameter and spaced over 3/4 in. It is tapped 1 turn from the transistor end.

The transistor, T-2028, is a *Philco* experimental type which is usually available from the larger supply houses such as *Allied* or *Lafayette*.

When wiring the unit, be sure to keep all leads as short as possible.

To peak the unit, apply 12 volts at the positive terminal and set your receiver to 432 mcs. Tune C2 for maximum signal.

PARTS LIST

Transistors
Q1—T-2028
Resistors (ohms)
R1—1K
R2—5.6K
R3—27K
Capacitors
C1—1500-pf UHF bypass feedthrough, Erie 357
C2—0.7-3-pf plastic dielectric piston trimmer, Erie 535C, No. 535-OR7
C3—1000-pf UHF bypass, Sprague No. 507C
C4—470 pf
Miscellaneous
L1—3 turns No. 20

102 Broadcast Band CW Transmitter

Here's a handy device for use as a code practice oscillator or for short distance communications as it can be operated without a license under Part 15 of the FCC's Rules. It will transmit CW on any frequency which you select throughout the entire range of the AM broadcasting band.

L1 is a standard ferri-loopstick, L2 consists of 12 turns of plastic covered hookup wire over the coils of L1.

The antenna length is limited by FCC regulations to 10 ft. so that the transmitter will not radiate over too large an area.

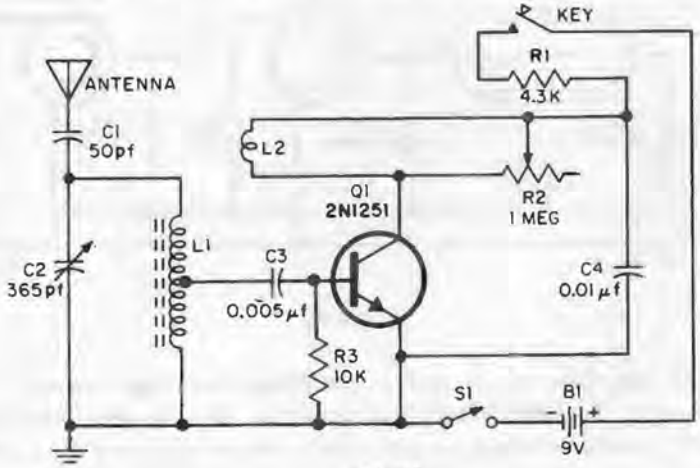

FIG. 102

The transmitter is tuned up in conjunction with an AM radio receiver. Pick an empty spot on the AM receiver's dial below 1000 kcs. Then switch on the transmitter, press down the key with the 1 meg potentiometer set at almost maximum resistance. Tune the 365-pf capacitor slowly until you hear a CW note coming over the loudspeaker. The pitch can then be adjusted by changing the setting of the 1 meg. potentiometer.

PARTS LIST

Transistors
Q1—2N1251
Resistors (ohms)
R1—4.3K
R2—1Meg pot.
R3—10K
Capacitors (μf)
C1—50 pf
C2—365-pf var.
C3—0.005
C4—0.01
Miscellaneous
L1—ferri-loopstick
L2—12 turns plastic covered hookup over L1
Antenna—see text
Key
S1—SPST
B1—9 volts

103 Geiger Counter

Just the thing for your fallout shelter or for the hopeful uranium prospector. This novel unit uses a 1B86 Geiger tube and only two transistors, yet is as sensitive as many commercial models. The whole thing can be built into a relatively small (5 in. x 4 in. x 3 in.) aluminum box complete with self contained batteries (which will have normal shelf life due to the low drain circuit).

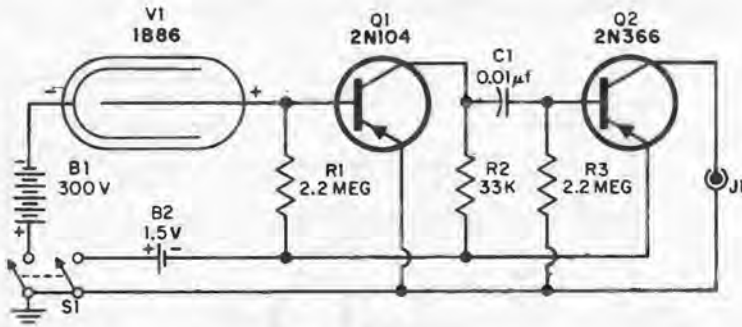

FIG. 103

The only great care needed in assembling the Geiger counter is the handling of the 1B86 which is quite fragile. The tube should be shock-proof mounted by taping it to two small cubes of sponge or foam rubber. The aluminum box will not hinder the function of the 1B86 and no holes need be cut in the cabinet to "let in the radiation." For the protection of the tube, the batteries should be lashed down so they won't move. Other components should also be kept away from the 1B86.

J1 is a standard headphone jack. S1 is a DPST toggle.

The unit can be easily tested by the use of a luminous wristwatch face, which should cause fairly rapid clicking in your headset. The unit will normally click due to cosmic activity.

PARTS LIST

Transistors
- Q1—2N104
- Q2—2N366

Resistors (ohms)
- R1, R3—2.2Meg
- R2—33K

Capacitors (μf)
- C1—0.01

Miscellaneous
- V1—1B86 Geiger tube
- J1—standard headphone jack
- S1—DPST
- B1—300 volts
- B2—1.5 volts

TRANSISTOR SUBSTITUTES

The following are standard substitutions for most of the transistors in this book. These substitutions have not been tried in the circuits and some variance in circuit operation is possible and should be expected. Diodes are also indicated here. Where no substitute is given, no practical one was found.

TRANS.	SUB.
1N34	1N34A, 1N38B, DN34A
1N38B	1N38, 1N38A, DN38
1N58	1N38B, 1N58A, DN38
1N60	1N34A, 1N54A, 1N64, 1N64A, 1N295, DN60
1N294	1N34A, 1N54A, 1N60, 1N66, DN34A
1N295	1N60, DN295
1N297	1N67A, 1N297A, DN38
2N44	2N1614, AT30M, GE-2
2N68	2SA69, 2SA145, AT20M, GE-2, GET883
2N104	244A, 2N215, 2N368, 2N633, AT6A, AT30M, ET3, GE-2, SYL107
2N107	2G101, 2G102, 2SA182, AT10N, ET3, GE-2, SYL106
2N109	2N217, 2N363, 2N422, 2N466, 2N1171, 2S865, 30V-MG, AT30H, ET3, ET5, GE-2, GT122, SYL108
2N139	2N218, 2SA12, 2SA15, 2SA64, 2SA138, 2SA297, BA6A, DS-25, ET2, GE-1, HF12H, SYL106
2N140	2N219, 2SA152, BE6A, DS-25, ET1, GE-1, HF12H, SYL105
2N164A	2N168A, 2N169, 2N169A, SA7, NR10
2N166	ET9, GE-7, NR10, SA7, SYL102
2N169	2N78A, 2N168A, 2N449, 2N1217, ET9, GE-7, NR10, SK7, SYL102
2N174	2N1100, 2N1412, ET7, GE-4, POWER 80, PT501
2N185	2N394A, 2N396A, 2N414, 2N414A, 2N415A, 2N416, AT30M, BSA, DS-26, ET5, GE-2, SYL108
2N188A	2N187A, 2N241A, 2N653, 2N654, 2N1354, 2N1355, AT30H, BSA, DS-26, ET5, GE-2, SYL108
2N2078	2N2415, 2SA50, 2SA64, 30V-MG, CK83, DS-26, ET3, ET4, ET5, GE-2, JR30
2N213	2N213A, 2N214, 2N1605A, ET10, GE-8, NA20, SQ7, SYL103
2N216	2N94, 2N233A, ET9, GE-5, NR5, SK7, SYL102
2N217	2N109, 2N363, 2N422, 2N466, 2N1171, 2S865, AT30H, GT122
2N232	GE-9, JR30X
2N241	2N187, 2N187A, 2N188, 2N188A, 2N241A, 2N271, AT30H, BSA, DS-26, ET3, ET4, ET5, GE-2, SYL108
2N247	2N274, 2N640, 2N641, 2N642, 2N1023, 2N1066, GE-1, JR30X
2N255	DS-520, ET6, GE-3, POWER 40, PT12, SYL109
2N255A	DS-520, ET6, GE-3, PT25, SYL109
2N269	2N404, 2N582, 2N584, 2N644, 2N645, 2N1171, GE-1, HF6M
2N274	2N640, 2N641, 2N642, 2N1023, 2N1066, 2N1224, GE-1, JR30X
2N278	2N173, 2N442, 2N443, ET7, GE-4, POWER 60, PT501
N285A	2N2858, 2N297A, 2N351, 2N555, 2N1359, 2N1360, DS-520, ET6, GE-3, POWER 40, PT40, SYL109
2N307	2S8142, DS-520, ET6, GE-8, POWER 12, PT25, SYL109
2N307A	POWER 25, PT25
2N321	AT20H, BSA, DS-26, ET3, ET4, ET5, GE-2, SYL108
2N366	GE-8, NA30, SYL106
2N370	2N371, 2N372, 2N373, 2N374, 2N384, 2N1178, 2N1179, GE-9, JR30X
2N372	2N370, 2N371, 2N373, 2N374, 2N384, 2N1178, 2N1179, BE6A, GE-9, JR30X
2N373	2N274, 2N374, 2N384, 2N640, 2N641, 2N642, 2N1178, BE6A, ET2, GE-1, JR30X
2N384	2N1023, 2N1066, 2N1225, 2N1396, 2N1397, JR100, SFT155
2N402	2N186A, 2N187A, 2N403, 2N612, 2N613, 2N1413, 30V-HG, AT20M, DS-26, ET3, ET4, ET5, GE-2, SYL107
2N407	2N109, 2N217, 2N362, 2N408, 2N1171, 2N1854, AT20H, BSA, DS-26, ET3, ET4, ET5, GE-2, GT20, SYL108
2N408	2N109, 2N217, 2N362, 2N407, 2N1171, 2N1854, AT20H, BSA, DS-26, ET3, ET4, ET5, GE-2, GT20, SYL108
2N417	2N1174, AFY14, BE6A, DS-25, ET2, GE-1, HF20H
2N438A	2N1994, 2N1995, GE-7, NR5
2N445	2N357, 2N358, 2N576, 2N595, 2N635, 2N636, 2N1996, GE-7, NR5
2N464	30V-MG, AT30M, DS-26, ET3, ET4, ET5, GE-2, SYL108
2N465	2N404A, 2N464, 2N518, 30V-MG, AT30H, DS-26, ET3, ET4, ET5, GE-2, SYL106
2N466	2N363, 2N422, 2N465, 2N518, 2N1371, 2N2431, 30V-HG, AC123, AT30H, DS-26, ET3, ET4, ET5, GE-2, SYL108
2N544	2N370, 2N371, 2N372, 2N373, 2N374, 2N1425, 2N1516, DS-25, GE-9, JR30X
2N578	2N315, GE-1, HF6M
2N679	2N356A, 2N357A, 2N358A, 2N364, 2N365, 2N377, GE-7, NR5, SA7
2N768	2N769, 2N779A, 2N846A, JR200
2N811	2N271, 2N271A, 2N396A, 2N415A, 2N416, 2N812, HF12H
2N1058	ET8, GE-3, NR10, SA7, SYL101
2N1087	2N1086, 2N1086A, ET8, GE-6, NR10, SA7, SYL101
2N1097	2N138, 2N238, 2N705A, 2N711A, 2N7118, 2N741, AT6A, AT30H, ET5, GE-2, SYL108
2N1107	2N1108, 2N1110, 2N1111, 2SA72, 2SA73, 2SA236, BA6A, DS-25, GE-8, JR30X
2N1177	2N1023, 2N1066, 2N1179, 2N1397, PRDT28, JR100
2N1178	2N1023, 2N1066, 2N1179, JR100
2N1191	2N43, 2N43A, 2N650, 2N1057, 2N1373, 2G577, SFT142, AT30H, DS-26, ET3, ET4, ET5, GE-2
2N1192	2N650, 2N651, 2N1057, 2N1373, 2N1375, 2N1377, AT30H, DS-26, ET3, ET4, ET5, GE-2
2N1251	2N1059, ET10, GE-8, NA30, SQ7, SYL103
2N1265	2N1097, AT10M
2N1291	PT30
2N1374	2N1174, 2N1376, 2N1381, AT30H
2N1413	2N1414, AT30M, GE-2
2N1684	2N269, 2N404, 2N582, 2N584, 2N643, 2N644, 2N645
2N1745	2N1742, 2N1743, 2N1744, 2N1746, 2N1747, 2N1748, 2N1748A, JR200
30V-HG	AT30H
BE6A	HF12M
DS-22	BE6, BE6A, HF6H
OC170	2N1177, 2N1179, 2N1180, 2N1516, 2N2089, 2N2090, GE-1, JR100
OC171	2N1177, 2N1179, 2N1180, 2N1516, 2N2089, 2N2090, GE-1, JR100
PWR. 6	PT6
PWR. 12	PT12
SK7	NR5
SQ7	NA20

$3.75

103 Simple Transistor Projects **Tom Kneitel**

Here is an electronics "cookbook" that furnishes the ham, CB'er, hi-fi buff and general experimenter with a large assortment of practical, easy-to-build circuits. Many of these inexpensive projects — ranging from an audio amplifier to a geiger counter — can be assembled from "junk box" parts normally on hand; none requires more than four transistors and most use only one.

The dual aim of this book is to familiarize the beginner with the many applications of transistors, and provide the advanced experimenter with a handy source of reference circuits. The introduction includes some general hints and precautions for those inexperienced in working with transistorized circuits. There are over 100 schematic diagrams.

ABOUT THE AUTHOR . . .

Tom Kneitel, K3FLL/WB2AAI, is the Editor of *S9/the citizens band journal.* Previously, he was Editor of *Hi-Fi Stereo Guide, Audio Yearbook, CB Horizons,* and *1962 CB Callbook/Handbook.* An accomplished author as well, Mr. Kneitel has written feature articles for several electronics and general interest magazines.

OTHER BOOKS OF INTEREST . . .

Basic Transistors **Alexander Schure**

An extremely comprehensive, but basic, coverage of the transistor. The book explains what a transistor is, what it is made of, how it differs from a vacuum tube, all its characteristics, and much more. *Cloth. 152 pp. Illustrated.*

Principles of Transistor Circuits – 2nd Ed. **S. W. Amos**

An introduction to the design of transistorized amplifiers, receivers, and numerous other electronic circuits. *Paper. 210 pp., illustrated.*

HAYDEN BOOK COMPANY, INC.
Rochelle Park, New Jersey
ISBN 0-8104-0313-7